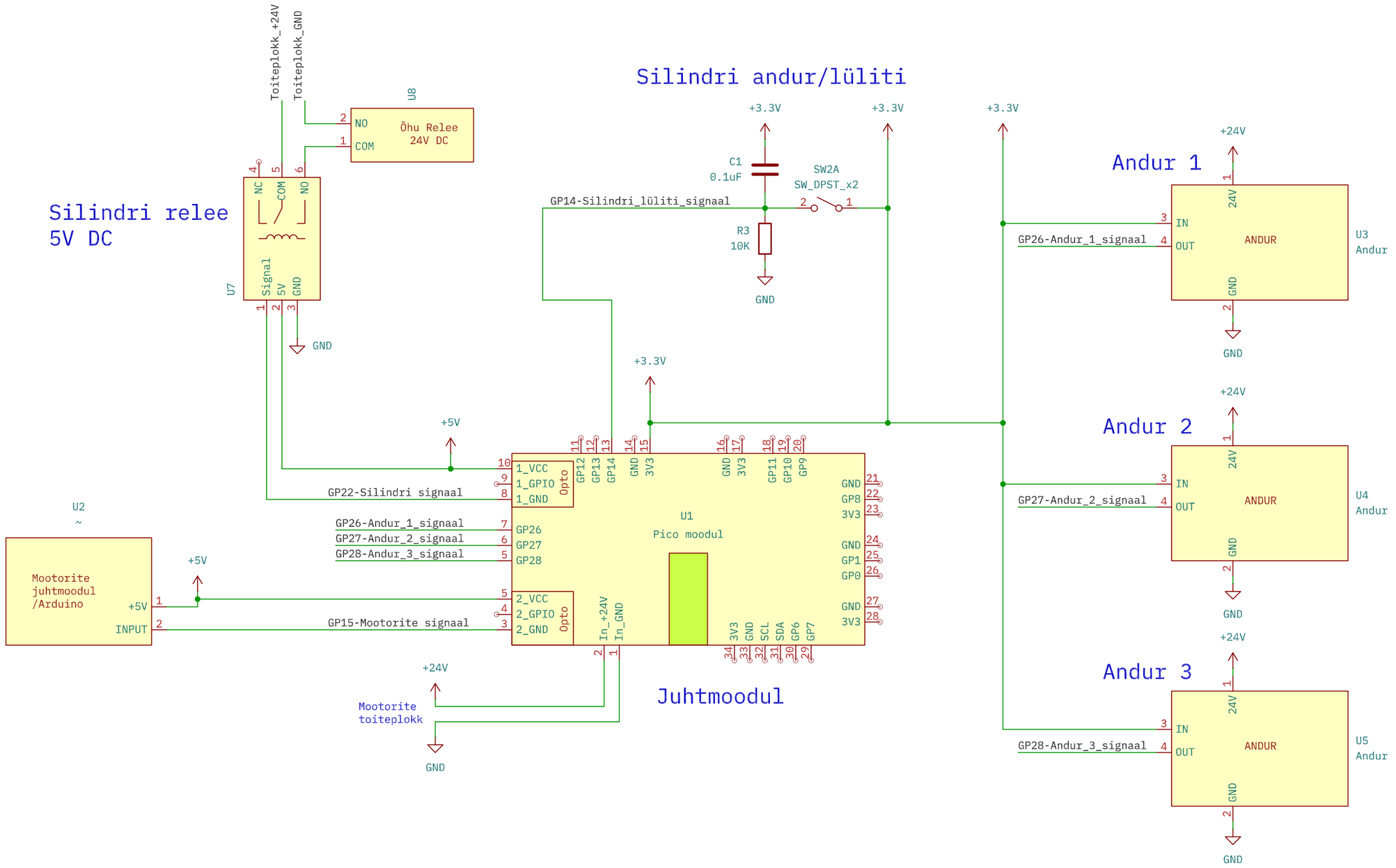

TSENTER
Tauno Erik

Sheet: /
File: Juhtmoodul_skeem.kicad_sch

Title: Juhtmoodul

Size: A4	Date: 2026-03-03	**Rev: 8**
KiCad E.D.A. 9.0.7		Id: 1/1