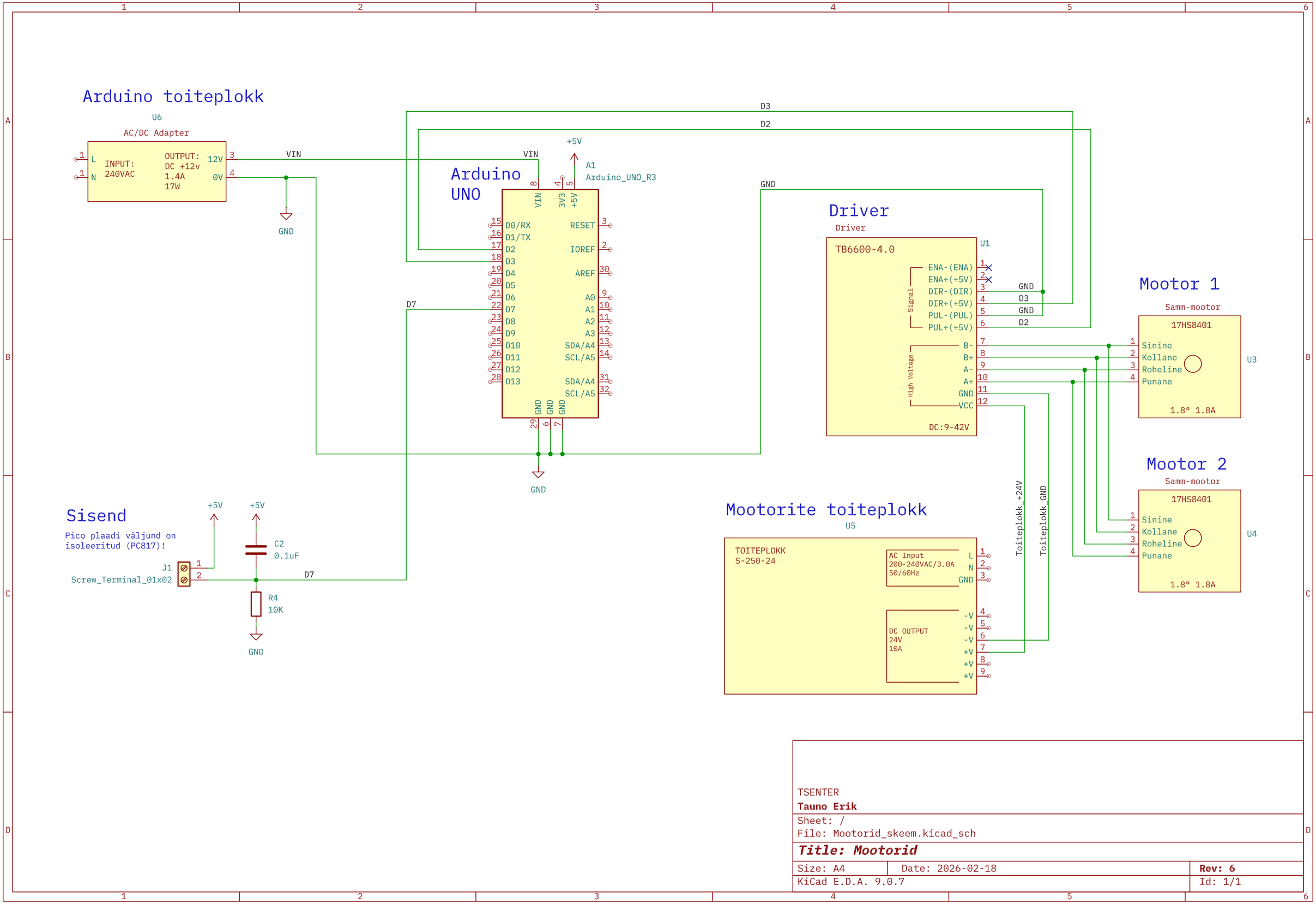


TSENTER
**Tauno Erik**

Sheet: /
File: Mootorid_skeem.kicad_sch

***Title: Mootorid***

| | | |
|---|---|---|
| Size: A4 | Date: 2026-02-18 | **Rev: 6** |
| KiCad E.D.A. 9.0.7 | | Id: 1/1 |