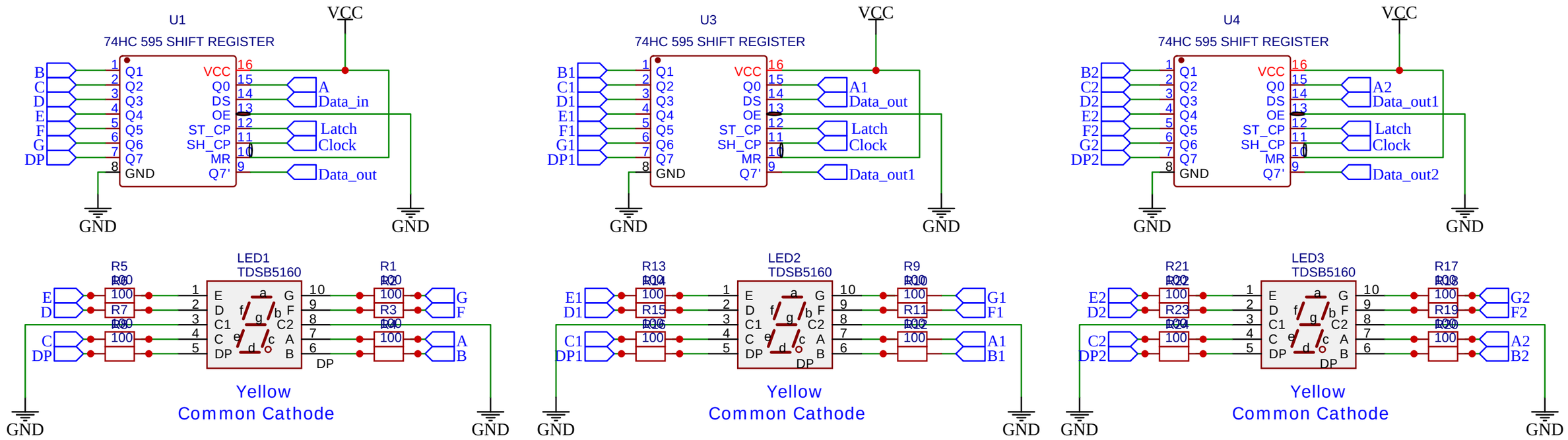

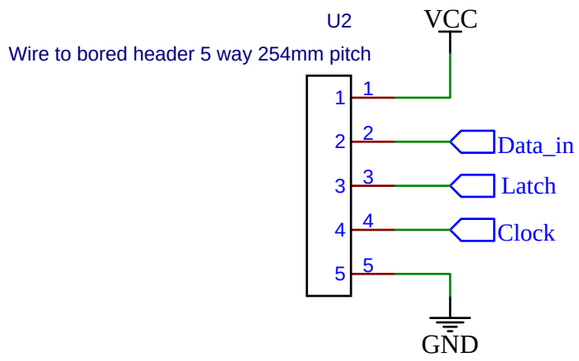

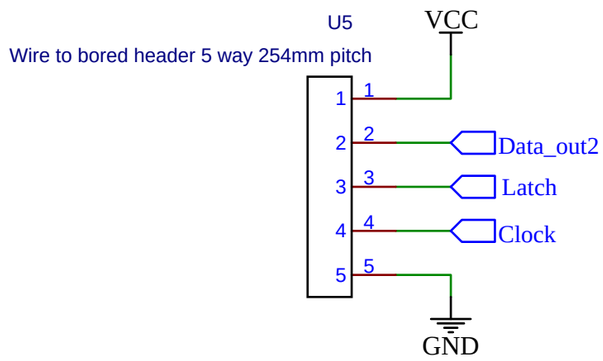

TITLE: Numbrid		REV: 1.0
EasyEDA	Company: taunoerik.art	Sheet: 1/1
	Date: 2022-03-29 Drawn By: Tauno Erik	