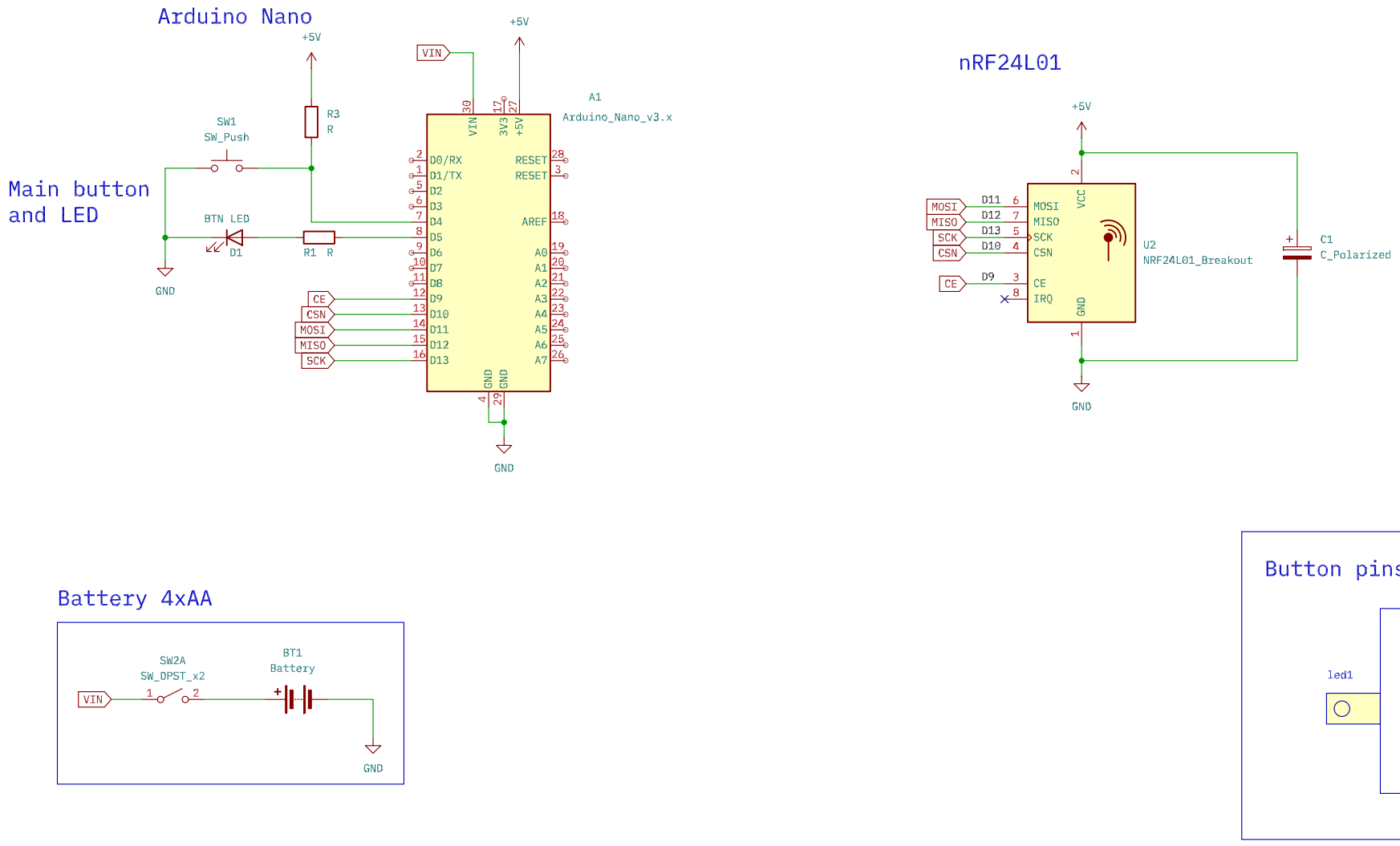

Tauno Erik

Sheet: /
File: Buzzer-Client.kicad_sch

Title: Nupp

Size: A4	Date: 2024-11-25	Rev:
KiCad E.D.A. 8.0.6		Id: 1/1