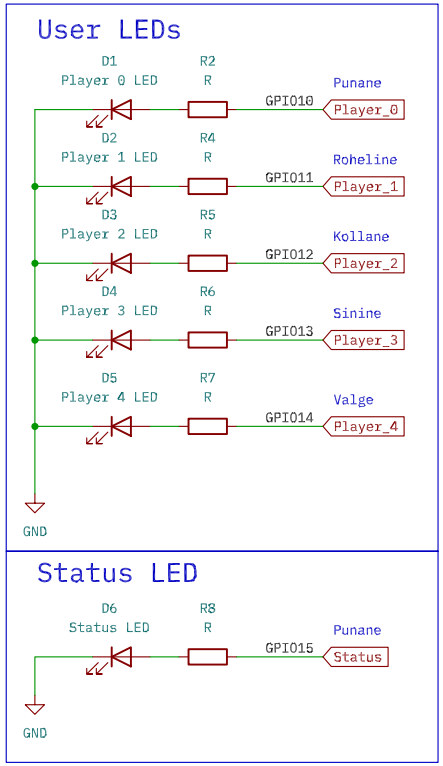

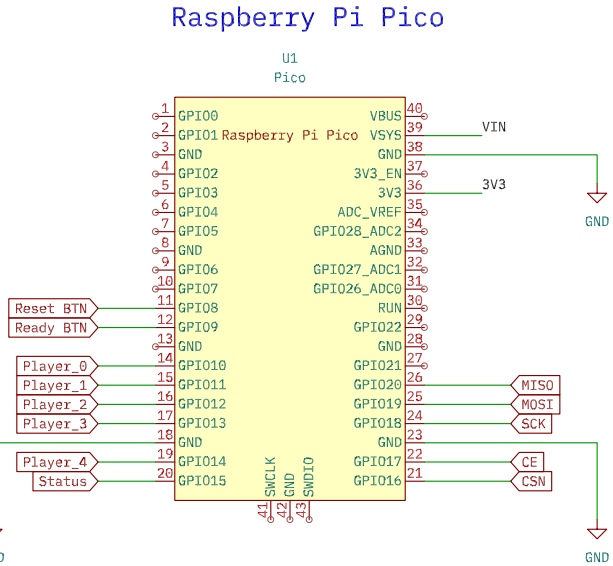

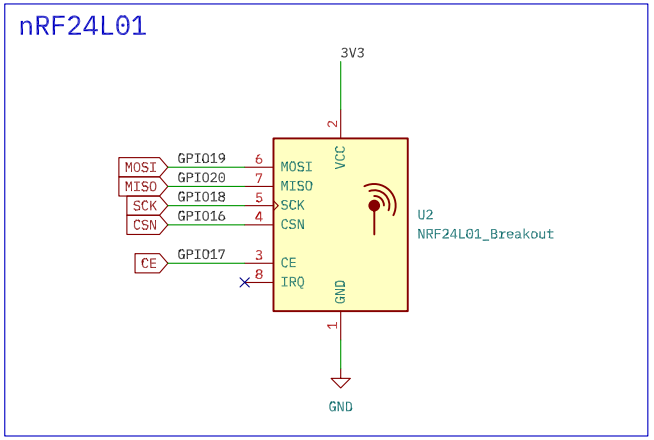

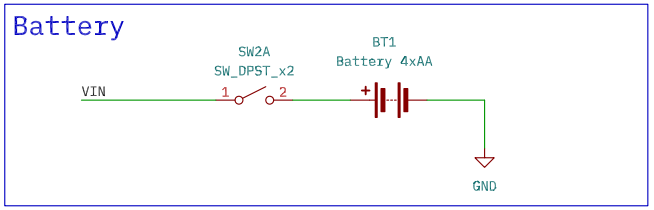

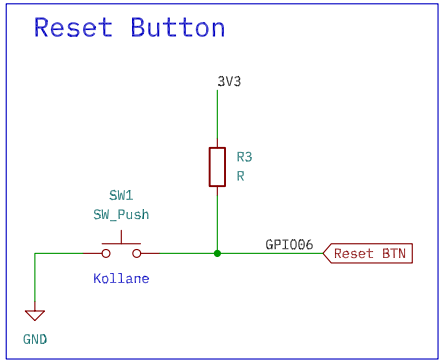

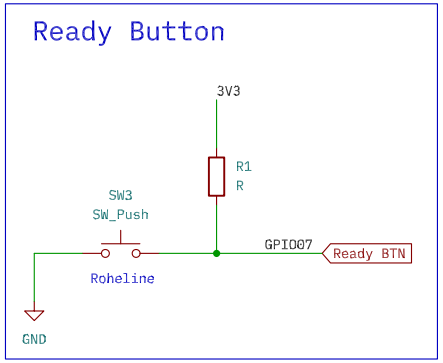

Tauno Erik

Sheet: /
File: Buzzer-Server.kicad_sch

Title: Ülemus

Size: A4	Date: 2024-11-27	Rev:
KiCad E.D.A. 8.0.6		Id: 1/1