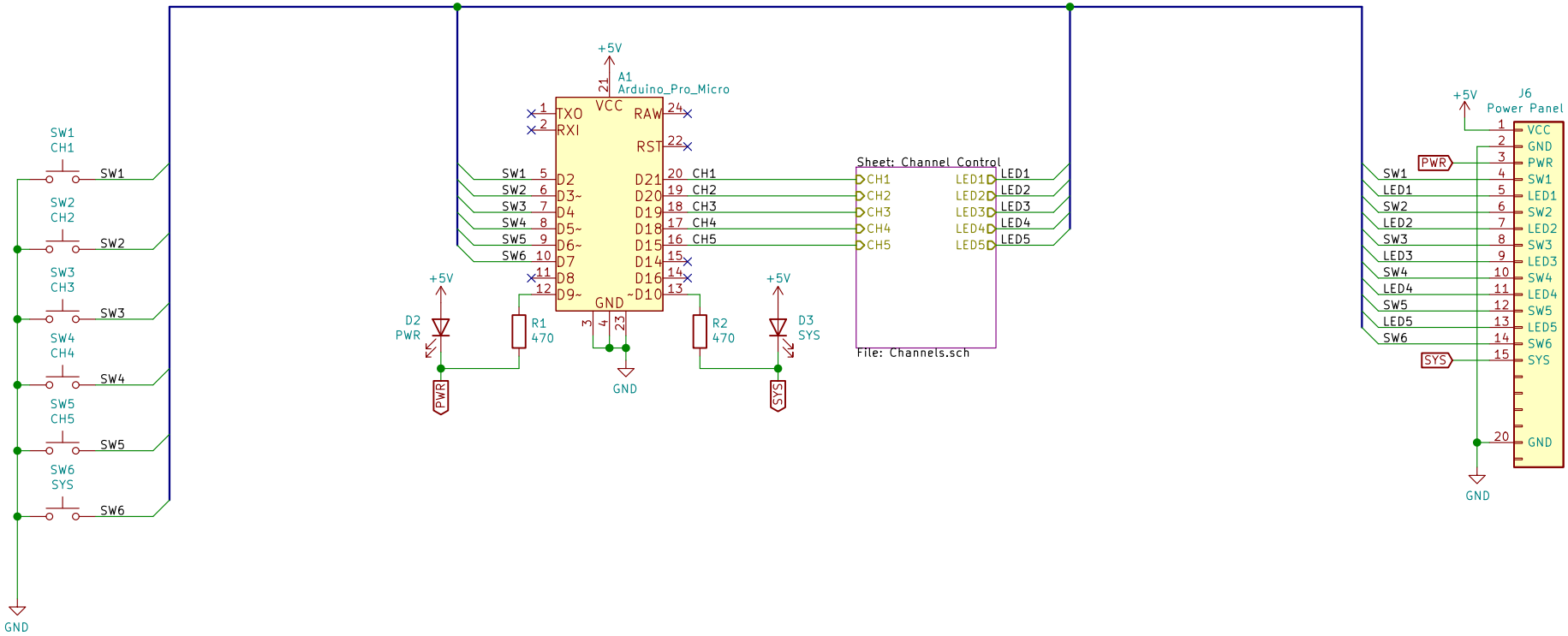

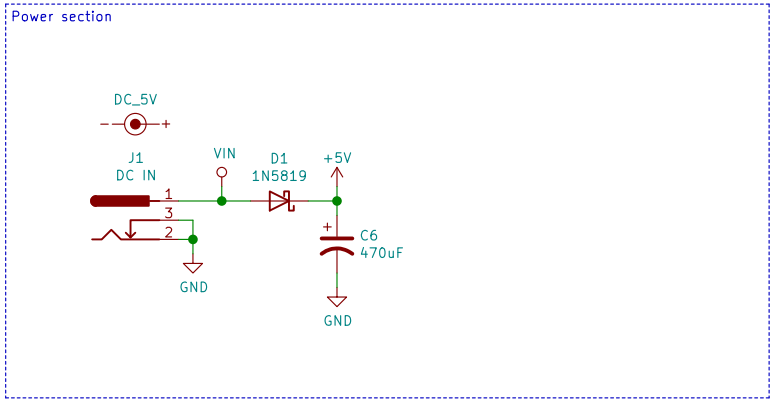

This might be completely silly, but with all of the modules together – I wanted to be able to turn them on and off.

Sheet: /
File: BulkyMIDI–32 Power Switch.sch

Title: BulkyMIDI–32 Power Switch

Size: A4	Date:	Rev: A
KiCad E.D.A. kicad (5.1.8)–1		Id: 1/2

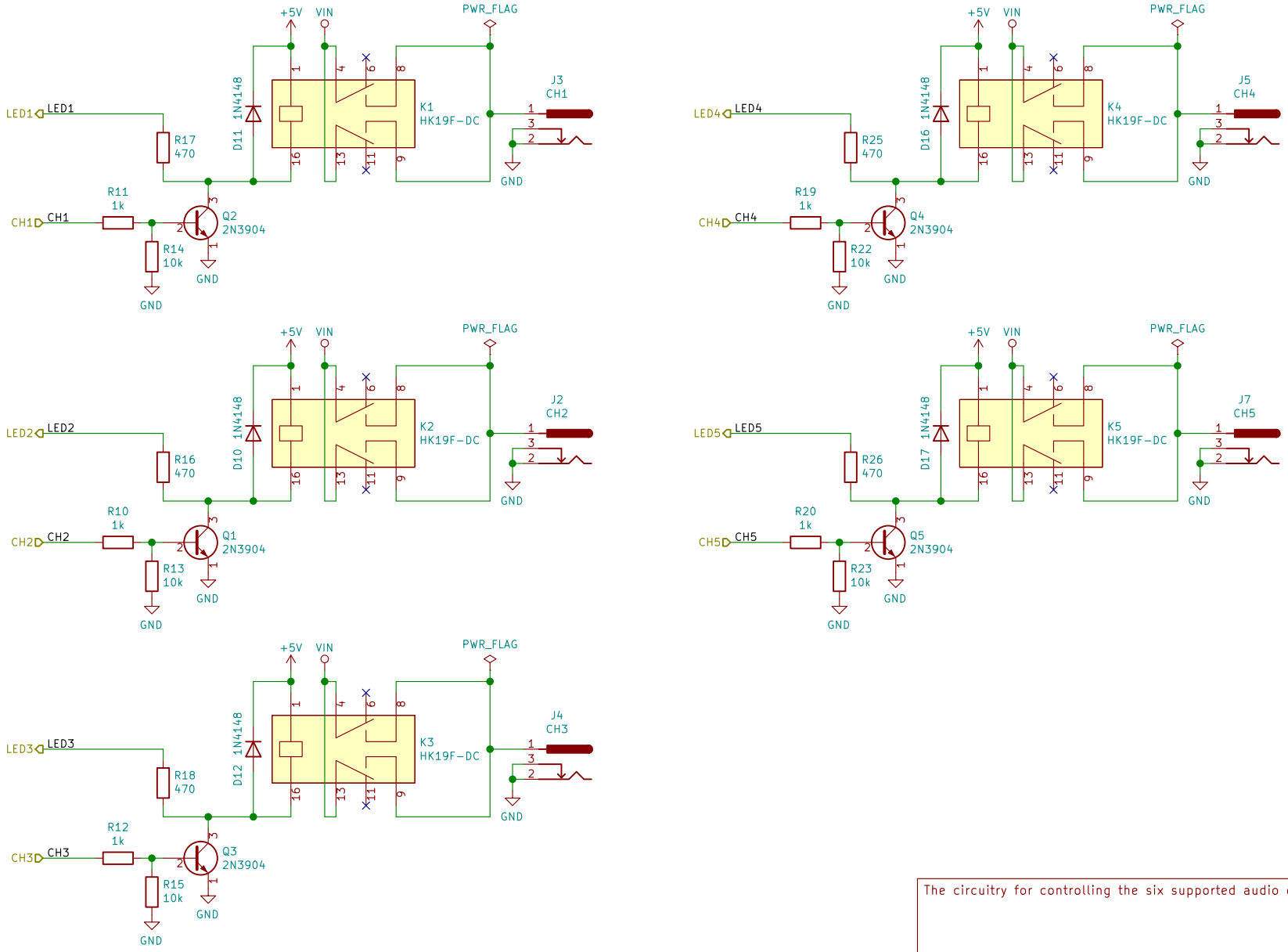

The circuitry for controlling the six supported audio channels.

Sheet: /Channel Control/
File: Channels.sch

Title: Channels

Size: A4	Date:	**Rev: A**
KiCad E.D.A. kicad (5.1.8)-1		Id: 2/2