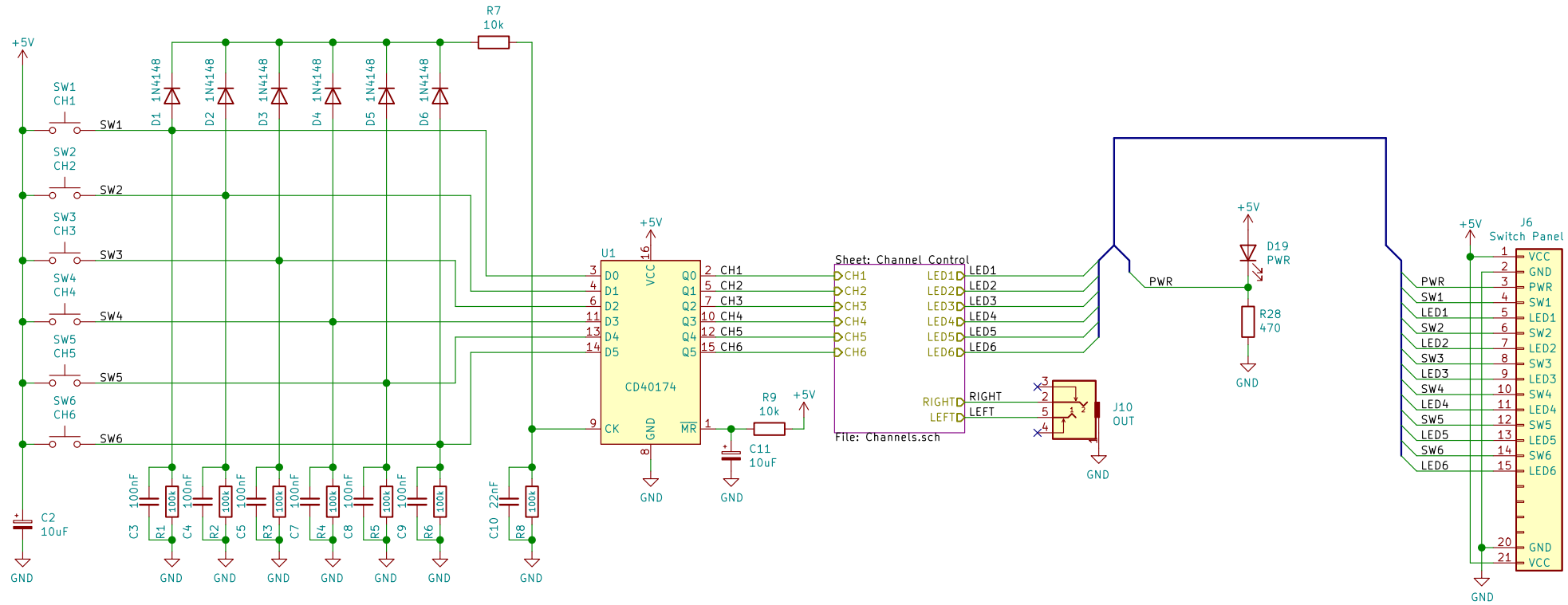

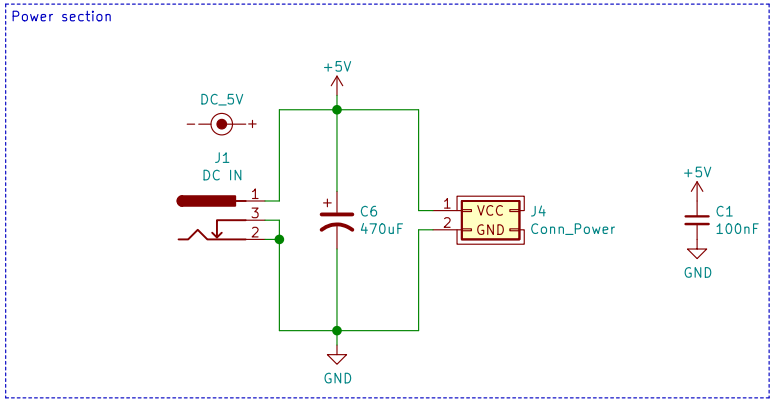

While the extras board provides the option of mixing up to three audio signals, the audio switch simply switches between them.

Sheet: /
File: BulkyMIDI-32 Audio Switch.sch

Title: BulkyMIDI-32 Audio Switch

Size: A4	Date:	Rev: A
KiCad E.D.A. kicad (5.1.8)-1		Id: 1/2

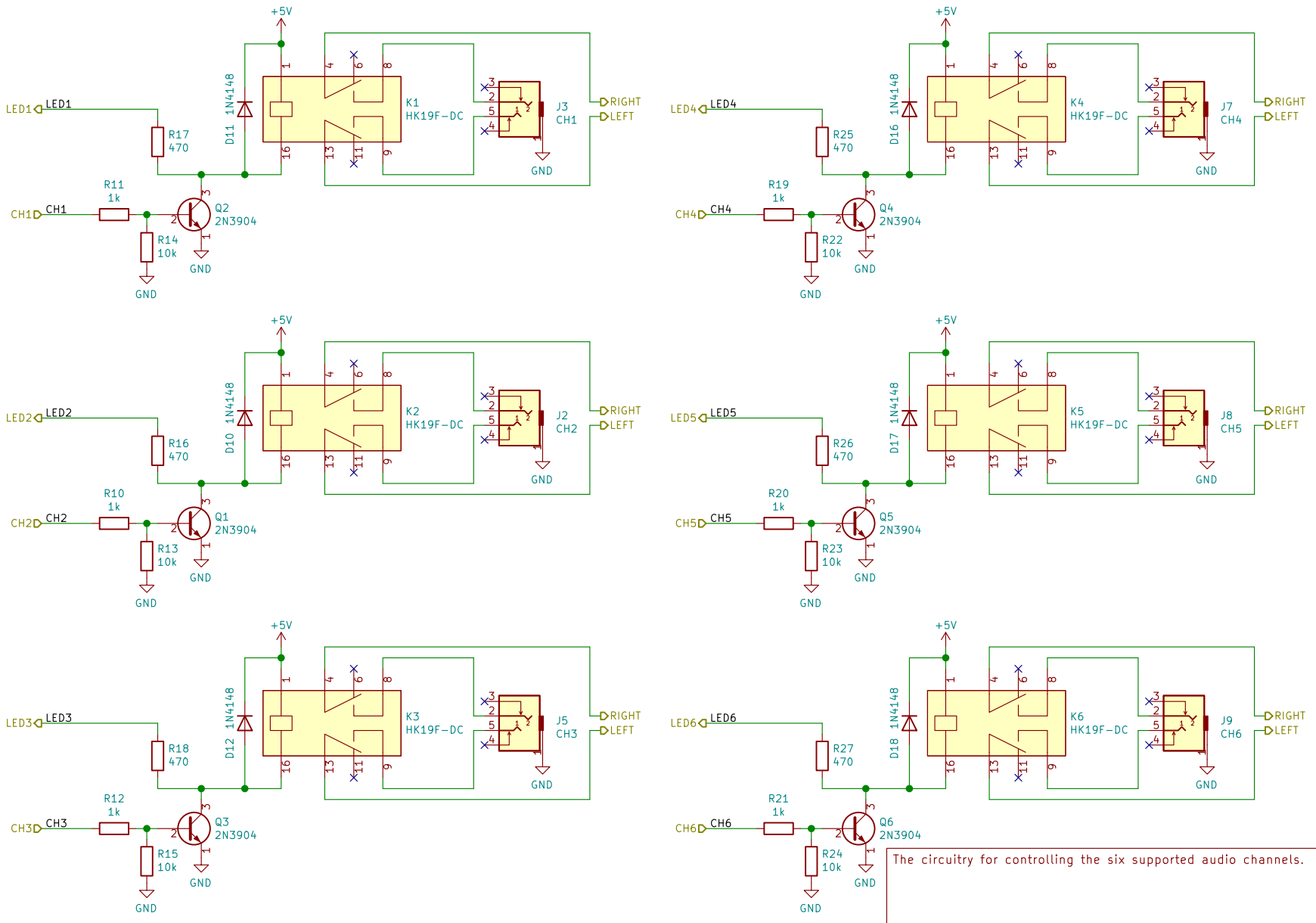

The circuitry for controlling the six supported audio channels.

Sheet: /Channel Control/
File: Channels.sch

Title: Channels

Size: A4	Date:	**Rev: A**
KiCad E.D.A. kicad (5.1.8)-1		Id: 2/2