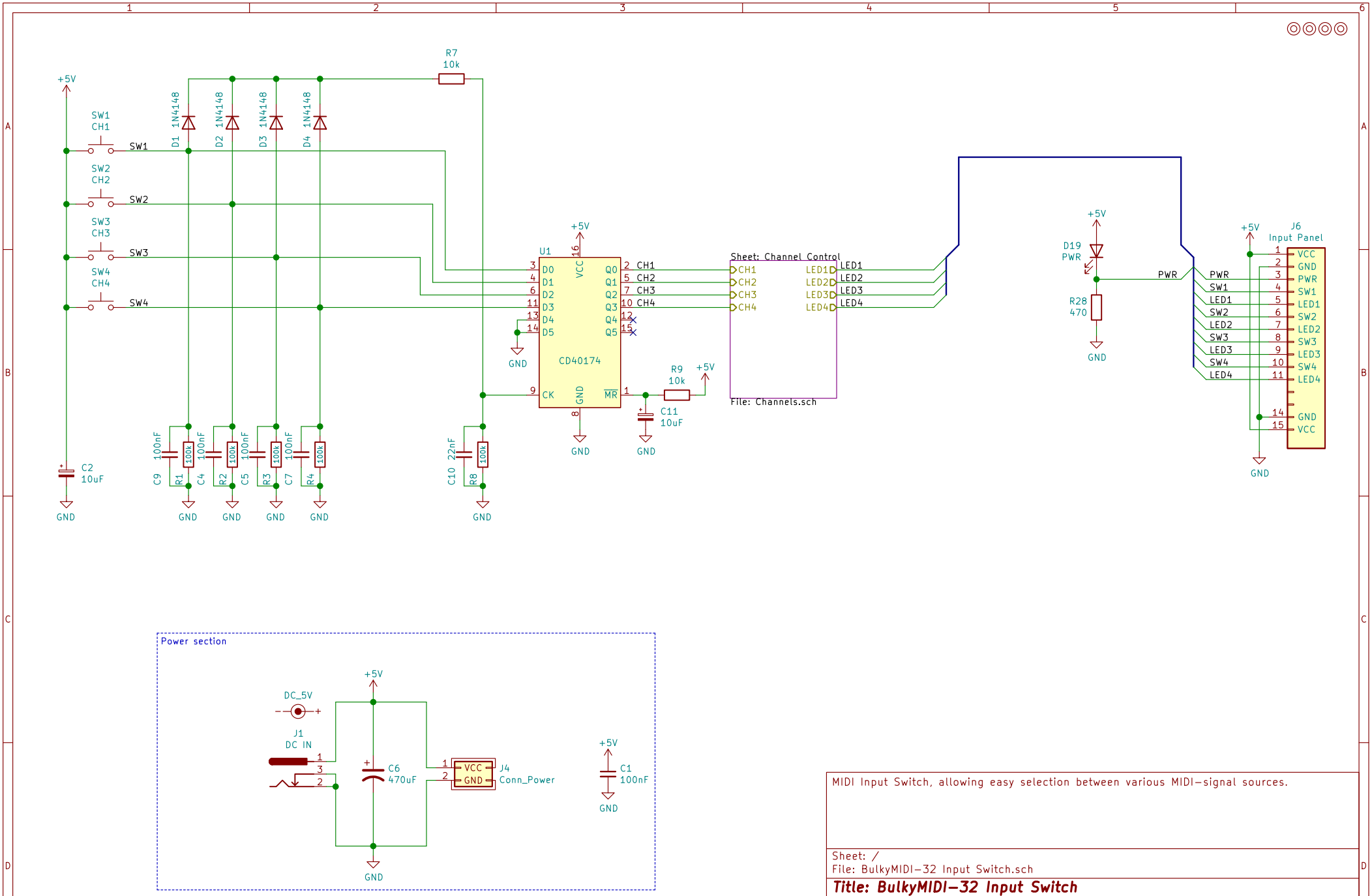

MIDI Input Switch, allowing easy selection between various MIDI-signal sources.

Sheet: /
File: BulkyMIDI-32 Input Switch.sch

Title: BulkyMIDI-32 Input Switch

Size: A4	Date:	Rev: A
KiCad E.D.A. kicad (5.1.8)-1		Id: 1/2

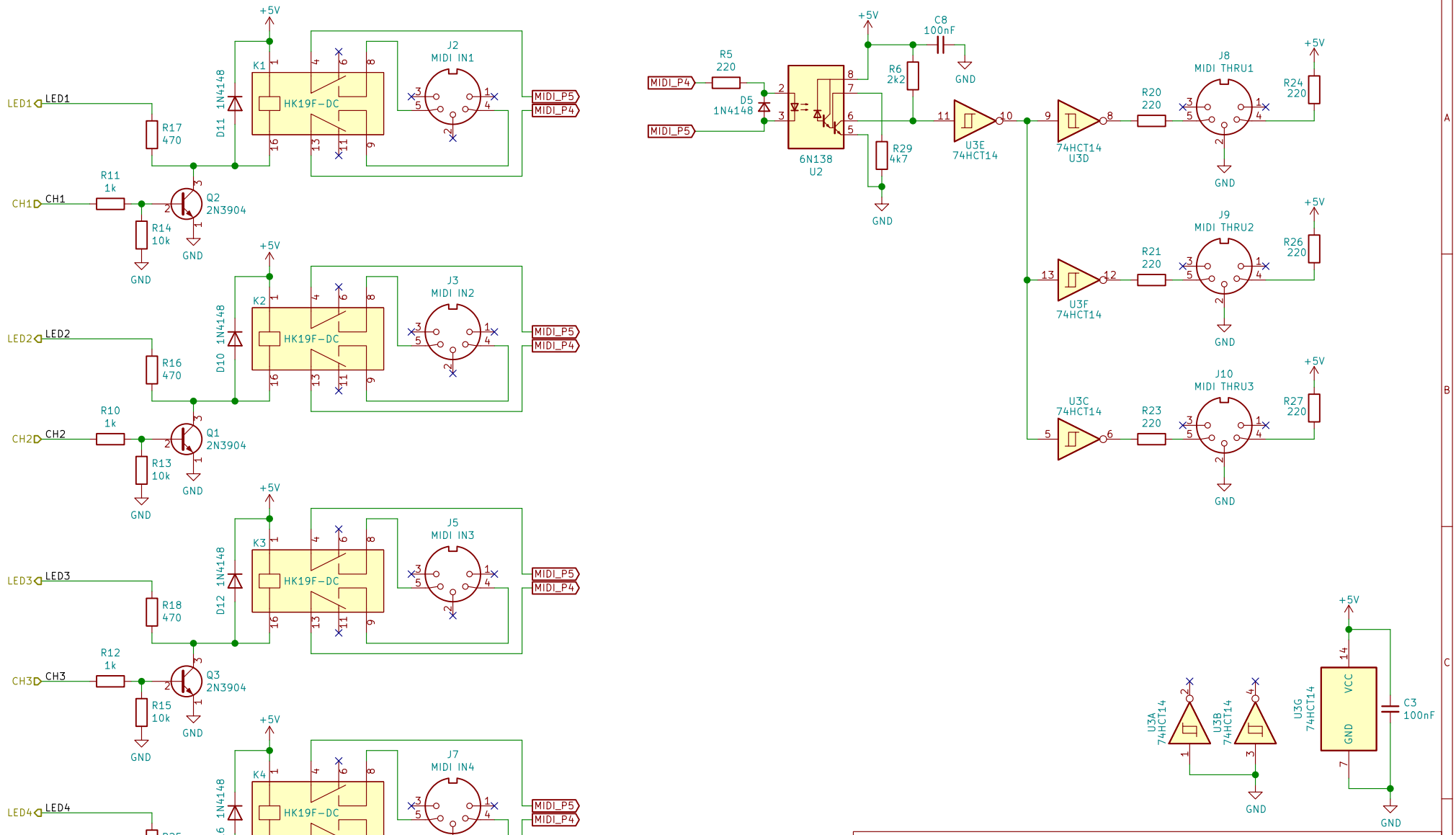

The circuitry for MIDI input compliance, relay switching and the duplication of the selected channel (THRU ports).

Sheet: /Channel Control/
File: Channels.sch

Title: Channels

Size: A4	Date:	**Rev: A**
KiCad E.D.A. kicad (5.1.8)-1		Id: 2/2