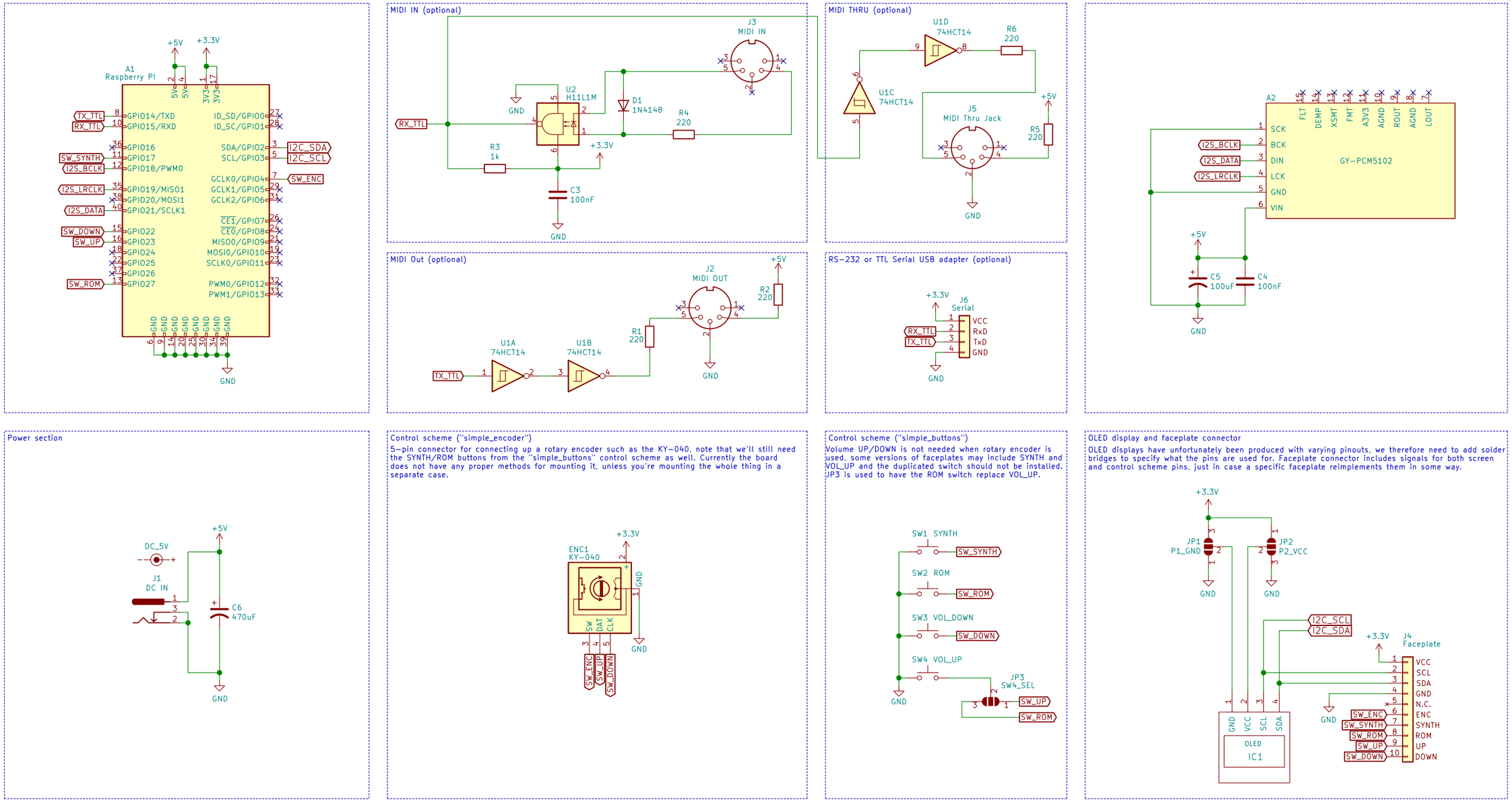

Based on clumsyMIDI, itself an implemented version of MT-32 PI.

Sheet: /
File: BulkyMIDI-32 Module.sch

Title: BulkyMIDI-32 Module

Size: A3	Date:	Rev: B
KiCad E.D.A. kicad (5.1.8)-1		Id: 1/1