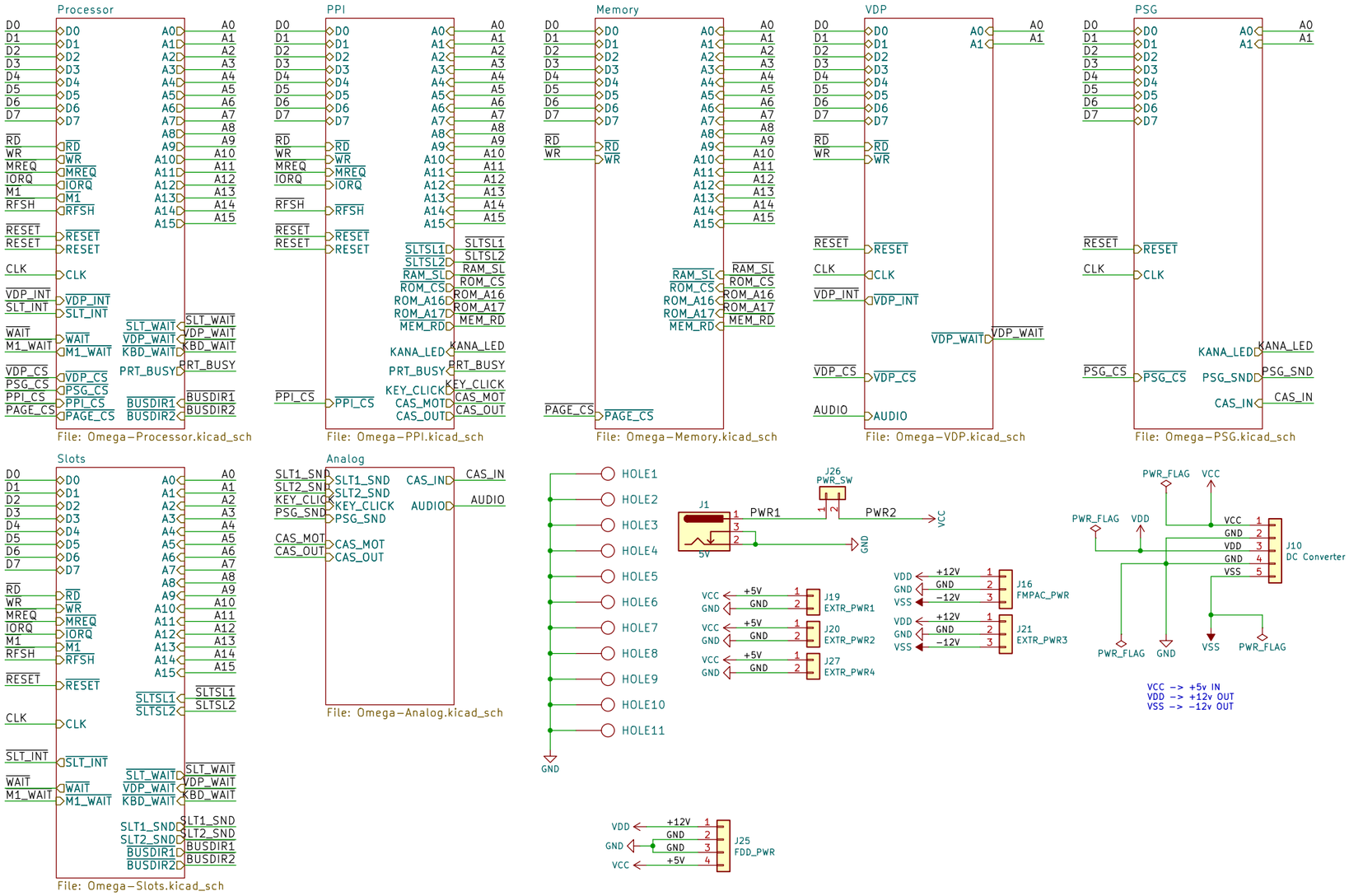

Sheet: /
File: Omega-Mainboard.kicad_sch

Title: Omega MSX2 Mainboard 1.3 MKV

Size: A3	Date: 29-09-2025	Rev: 1.3 MKV
KiCad E.D.A. 9.0.2		Id: 1/8

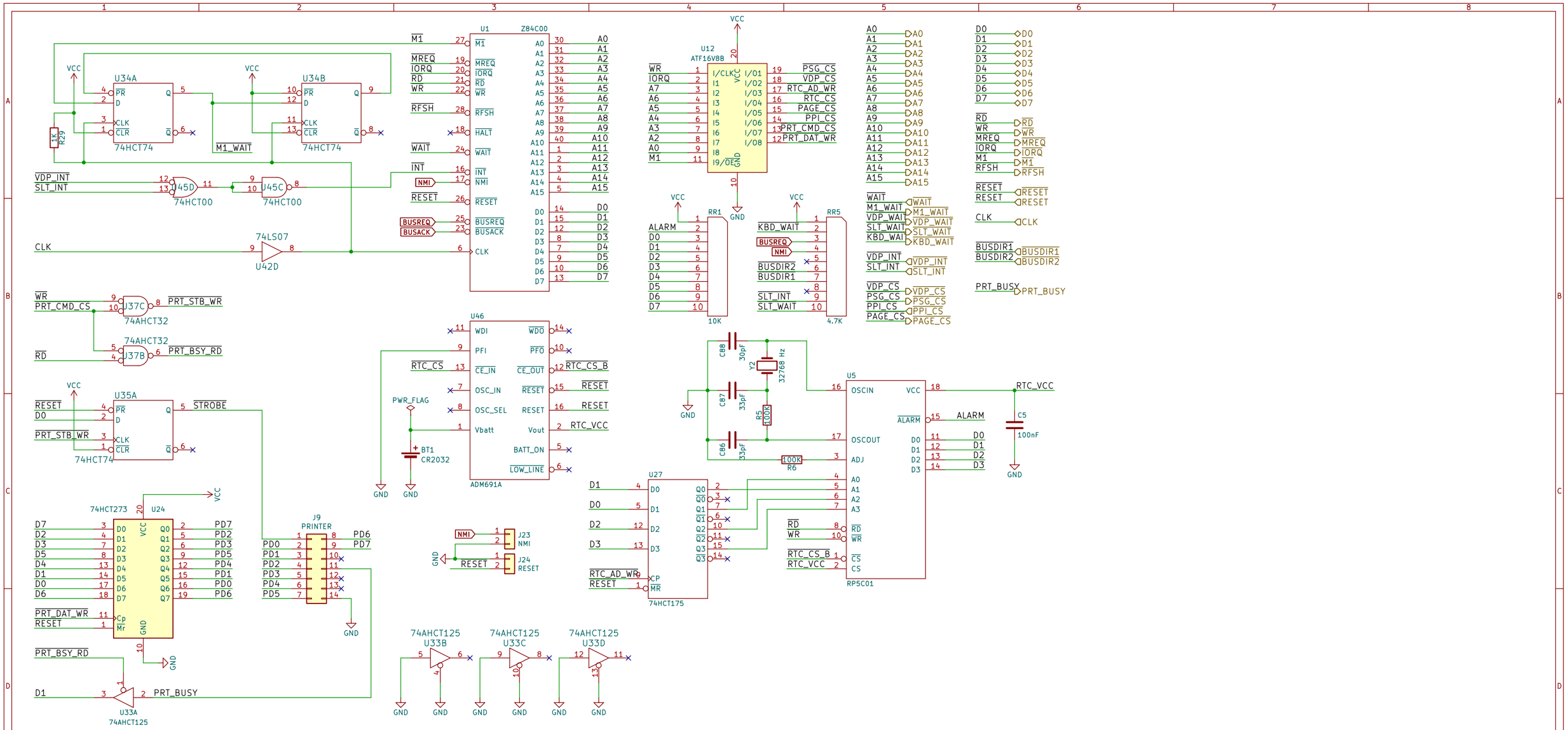

Sheet: /Processor/
File: Omega-Processor.kicad_sch

Title: Omega MSX2 Mainboard 1.3 MKV

Size: A3	Date: 29-09-2025	Rev: 1.3 MKV
KiCad E.D.A. 9.0.2		Id: 2/8

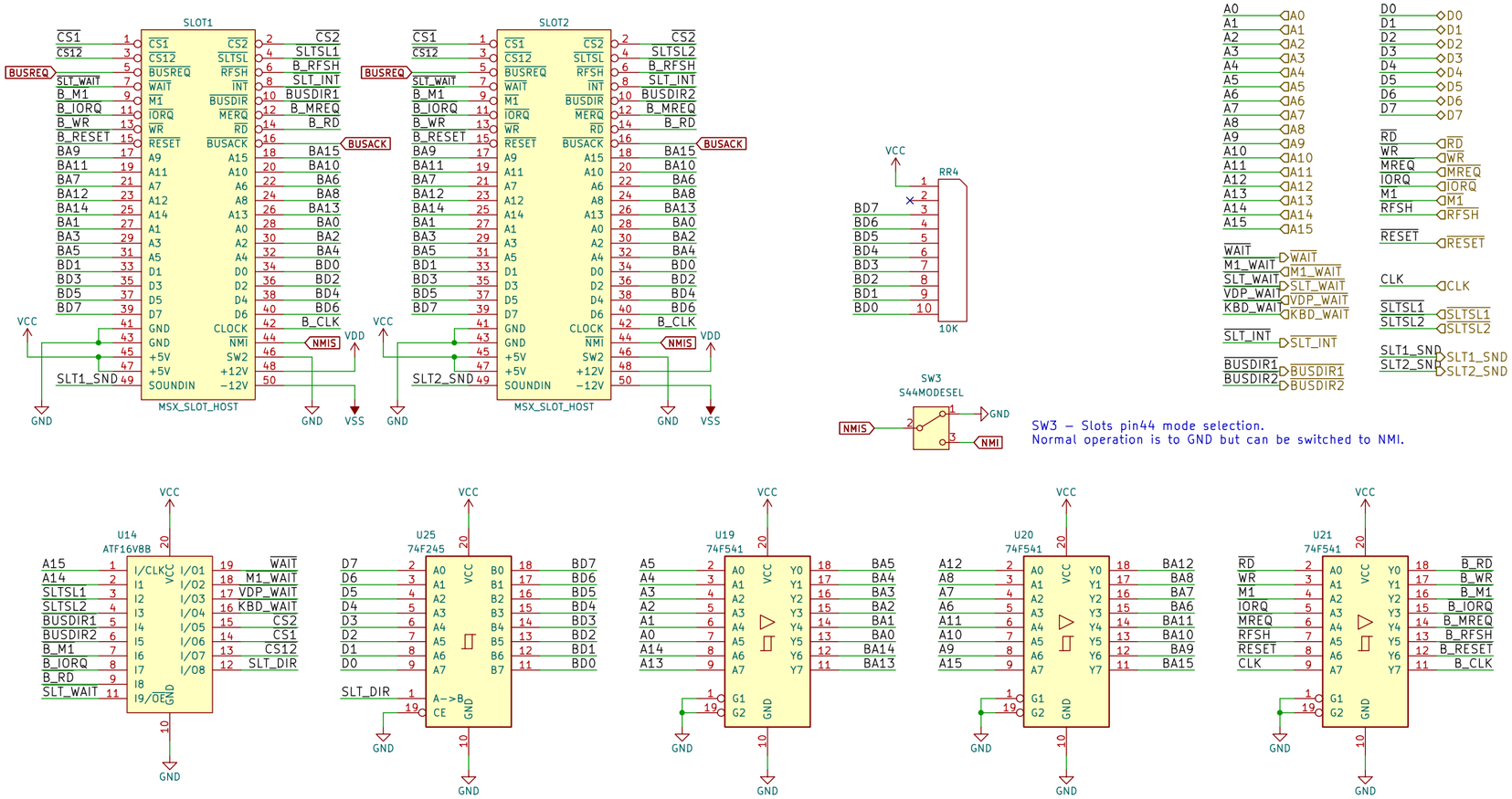

Sheet: /Slots/
File: Omega-Slots.kicad_sch

Title: Omega MSX2 Mainboard 1.3 MKV

Size: A3	Date: 29-09-2025	Rev: 1.3 MKV
KiCad E.D.A. 9.0.2		Id: 3/8

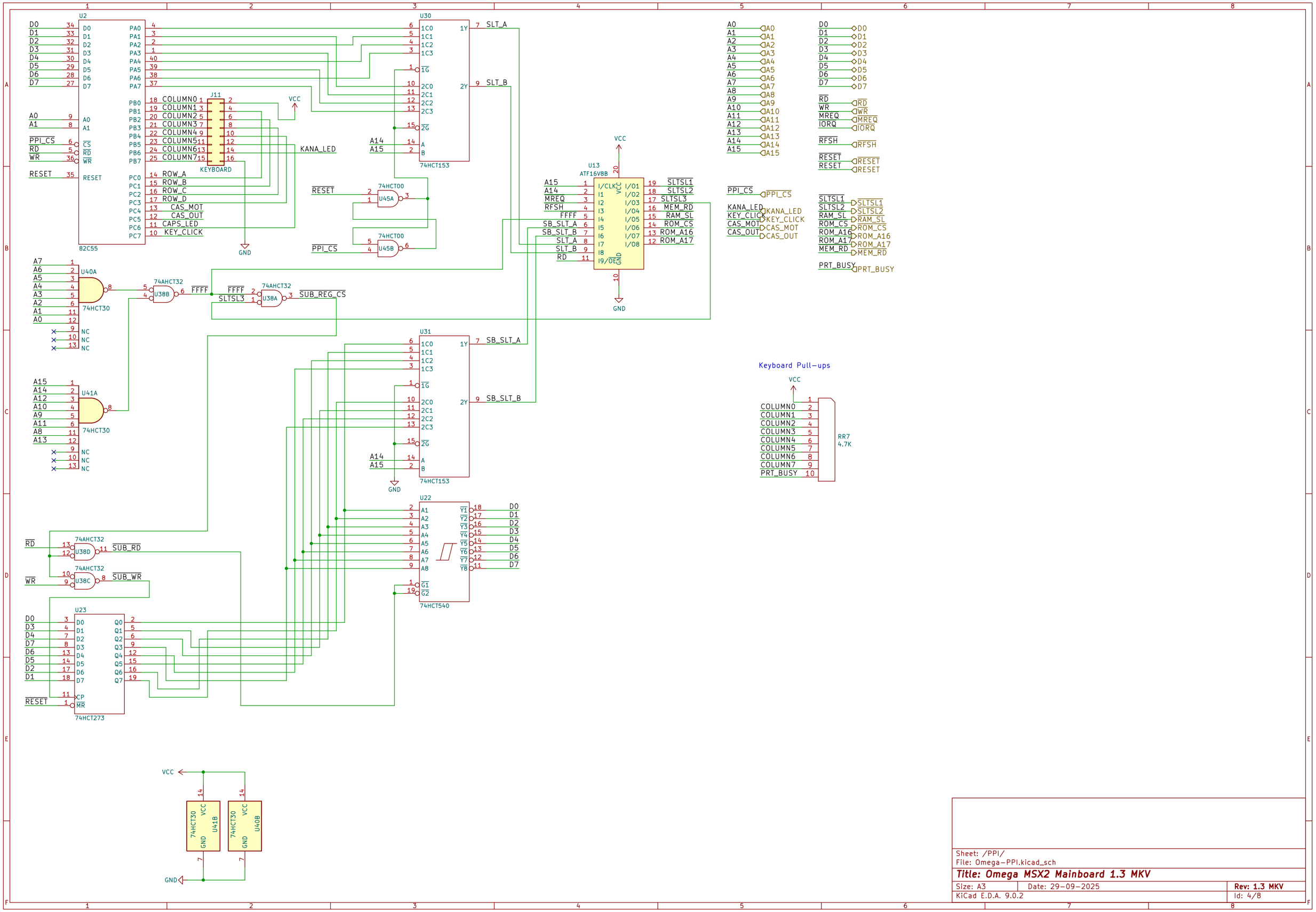

Sheet: /PPI/
File: Omega-PPI.kicad_sch

Title: Omega MSX2 Mainboard 1.3 MKV

Size: A3	Date: 29-09-2025	Rev: 1.3 MKV
KiCad E.D.A. 9.0.2		Id: 4/8

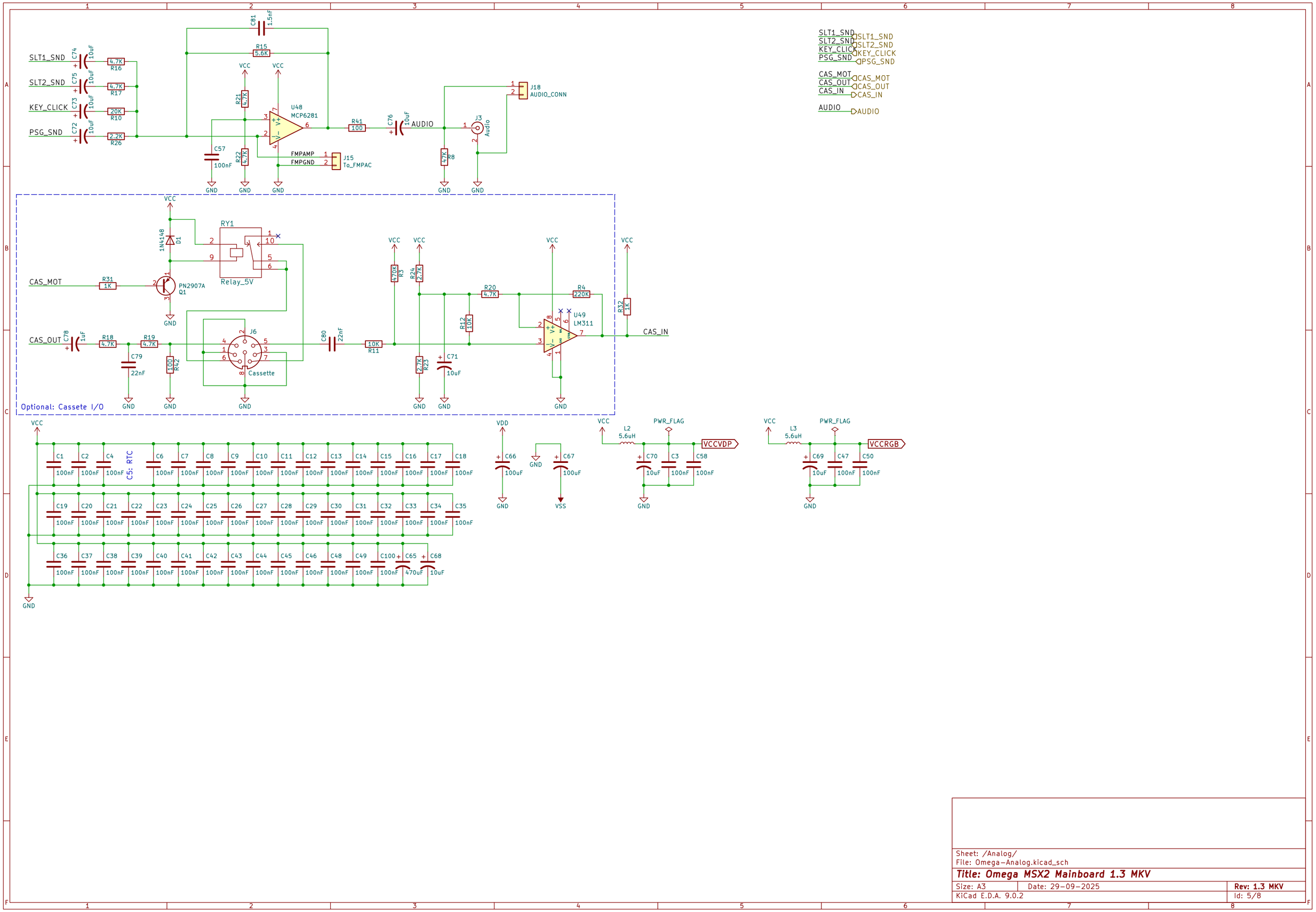

Sheet: /Analog/
File: Omega-Analog.kicad_sch

Title: Omega MSX2 Mainboard 1.3 MKV

Size: A3	Date: 29-09-2025	Rev: 1.3 MKV
KiCad E.D.A. 9.0.2		Id: 5/8

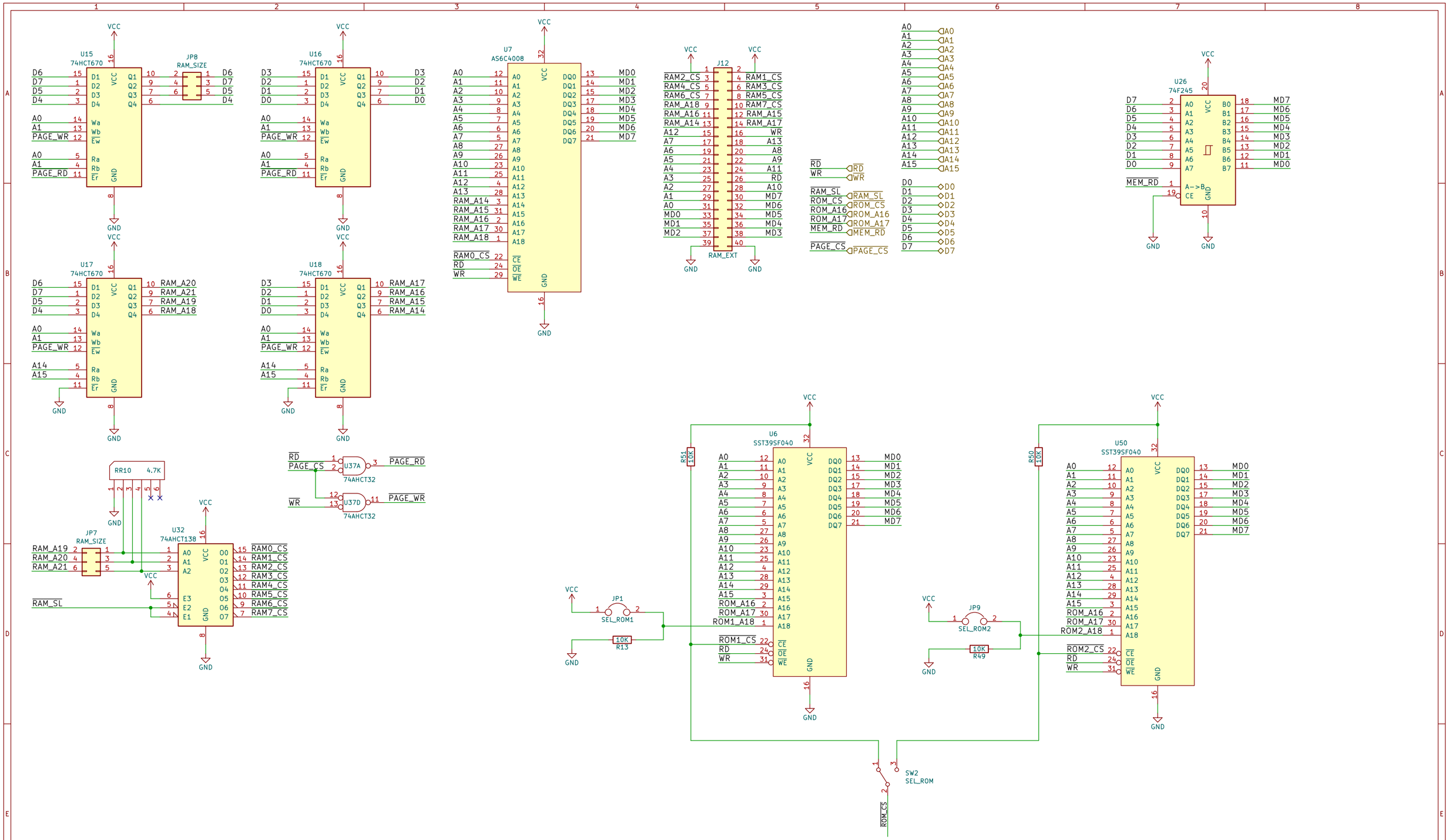

Sheet: /Memory/
File: Omega-Memory.kicad_sch

Title: Omega MSX2 Mainboard 1.3 MKV

Size: A3	Date: 29-09-2025	Rev: 1.3 MKV
KiCad E.D.A. 9.0.2		Id: 6/8

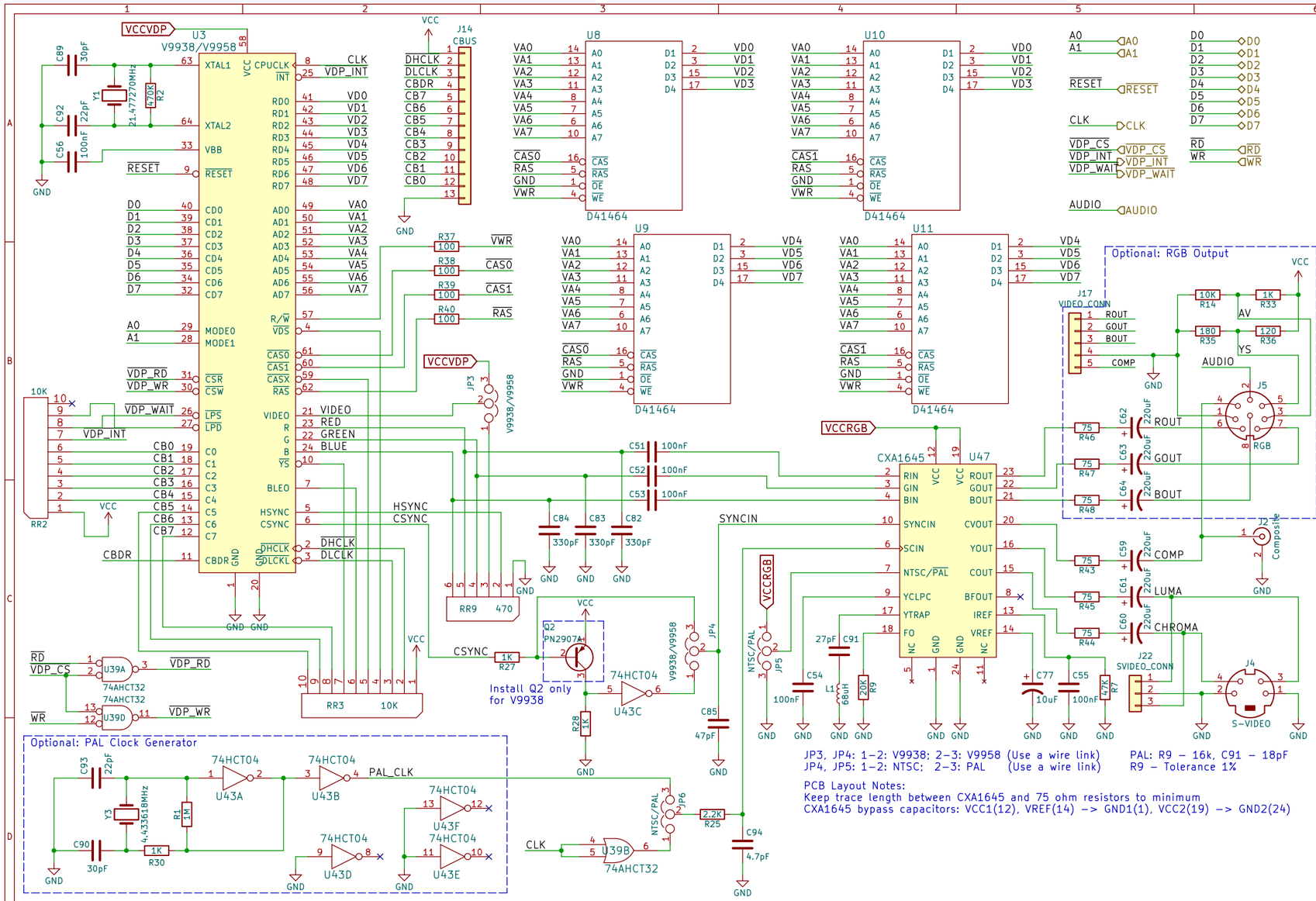

Sheet: /VDP/
File: Omega-VDP.kicad_sch

Title: Omega MSX2 Mainboard 1.3 MKV

Size: A3	Date: 29-09-2025	Rev: 1.3 MKV
KiCad E.D.A. 9.0.2		Id: 7/8

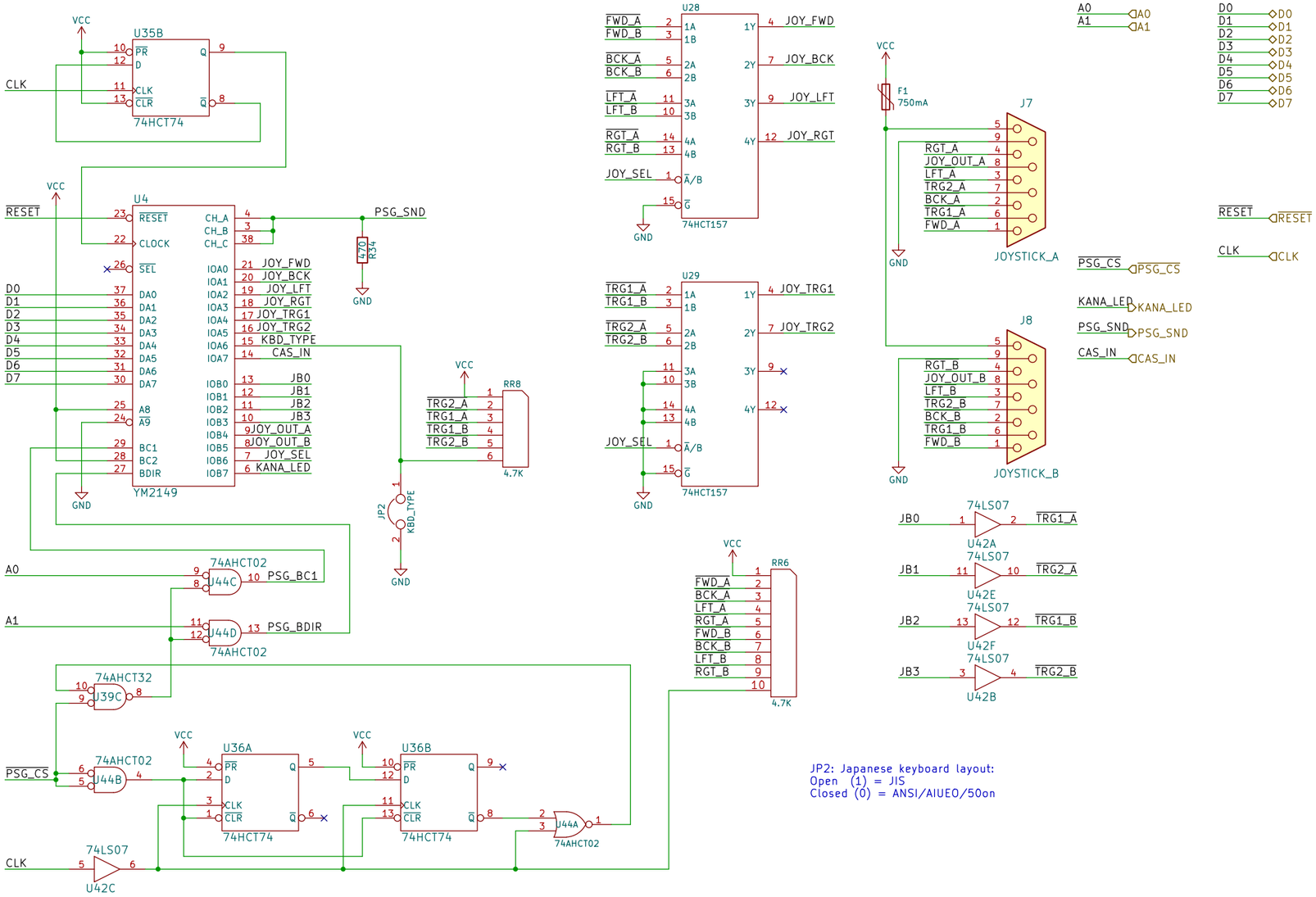

JP2: Japanese keyboard layout:
Open (1) = JIS
Closed (0) = ANSI/AIUEO/50on

Sheet: /PSG/
File: Omega-PSG.kicad_sch

Title: Omega MSX2 Mainboard 1.3 MKV

Size: A3	Date: 29-09-2025	Rev: 1.3 MKV
KiCad E.D.A. 9.0.2		Id: 8/8