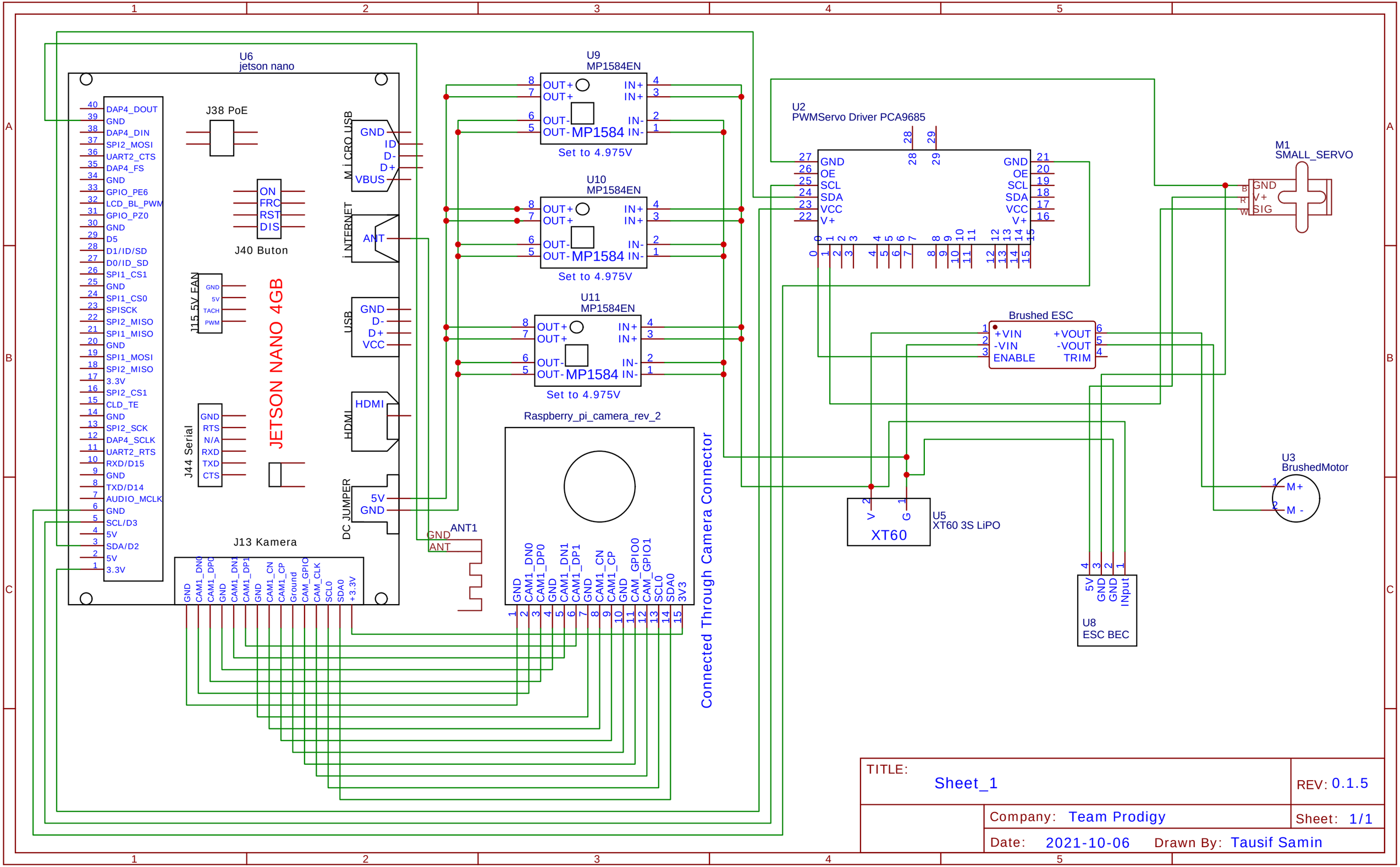

TITLE: Sheet_1

REV: 0.1.5

Company: Team Prodigy

Sheet: 1/1

Date: 2021-10-06

Drawn By: Tausif Samin