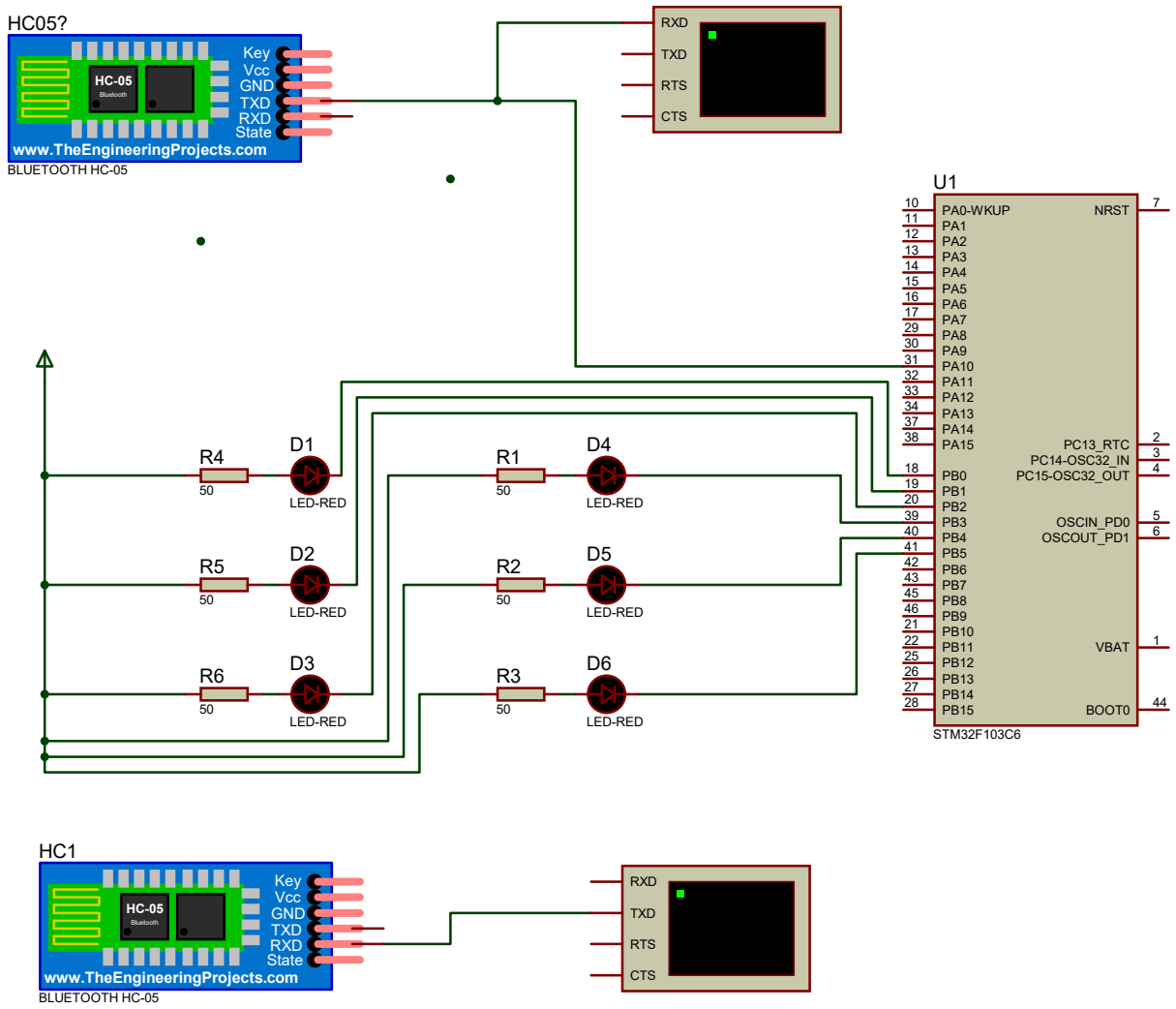
HC05?
Key
Vcc
GND
TXD
RXD
State
HC-05
www.TheEngineeringProjects.com
BLUETOOTH HC-05
RXD
TXD
RTS
CTS
U1
PA0-WKUP
PA1
PA2
PA3
PA4
PA5
PA6
PA7
PA8
PA9
PA10
PA11
PA12
PA13
PA14
PA15
PB0
PB1
PB2
PB3
PB4
PB5
PB6
PB7
PB8
PB9
PB10
PB11
PB12
PB13
PB14
PB15
NRST
PC13_RTC
PC14-OSC32_IN
PC15-OSC32_OUT
OSCIN_PD0
OSCOUT_PD1
VBAT
BOOT0
STM32F103C6
R4
R5
R6
R1
R2
R3
50
D1
D2
D3
D4
D5
D6
LED-RED

HC1
Key
Vcc
GND
TXD
RXD
State
HC-05
www.TheEngineeringProjects.com
BLUETOOTH HC-05
RXD
TXD
RTS
CTS