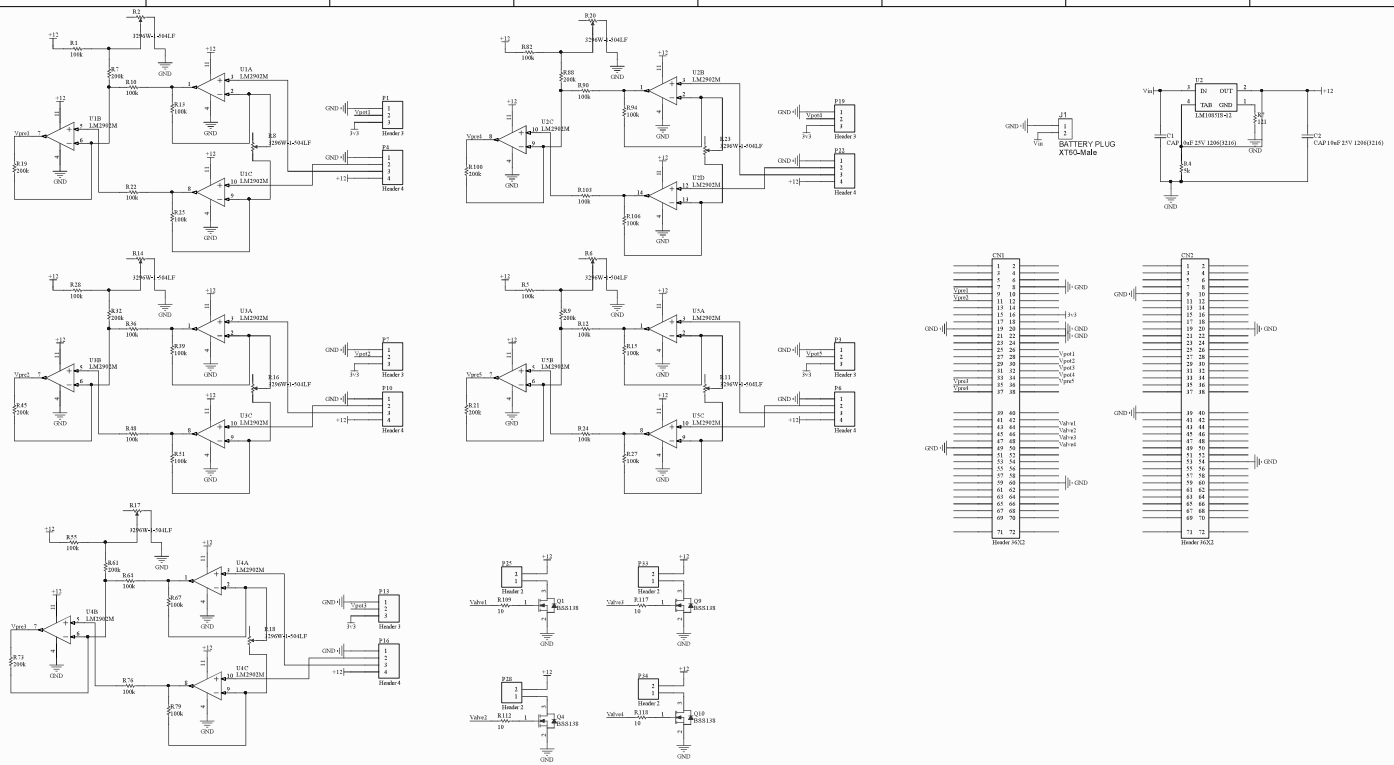

Title		
Size	Number	Revision
A1		
Date: 14/03/2019	Sheet of	
File: C:\Users\Shahid\Kicad\	Drawn By:	