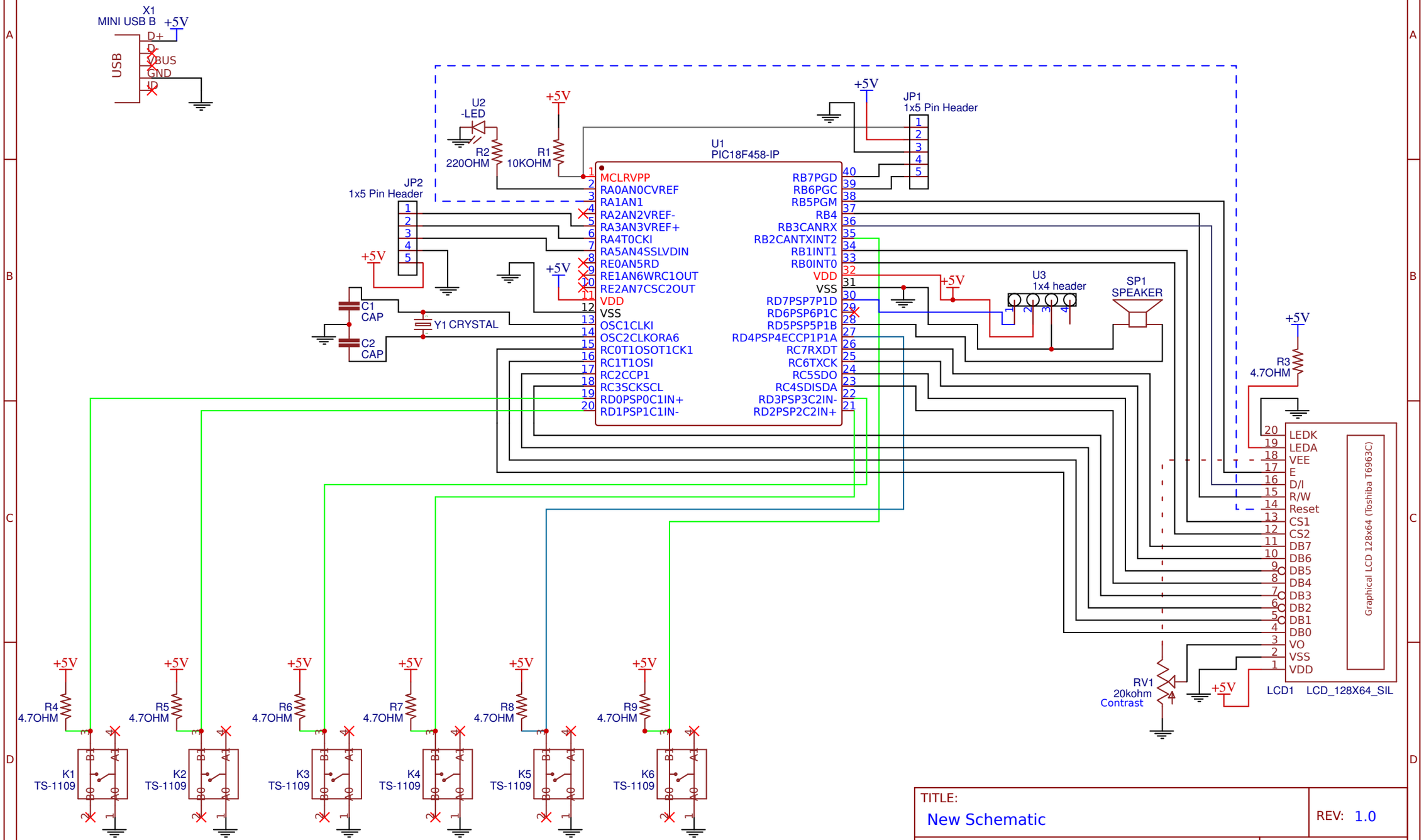

TITLE: New Schematic	REV: 1.0
Date: 2017-01-14	Sheet: 1/1
EasyEDA V4.1.3	Drawn By: tazboyz16