100 ohm pull-ups are required as PB4 & PB5 are open drain

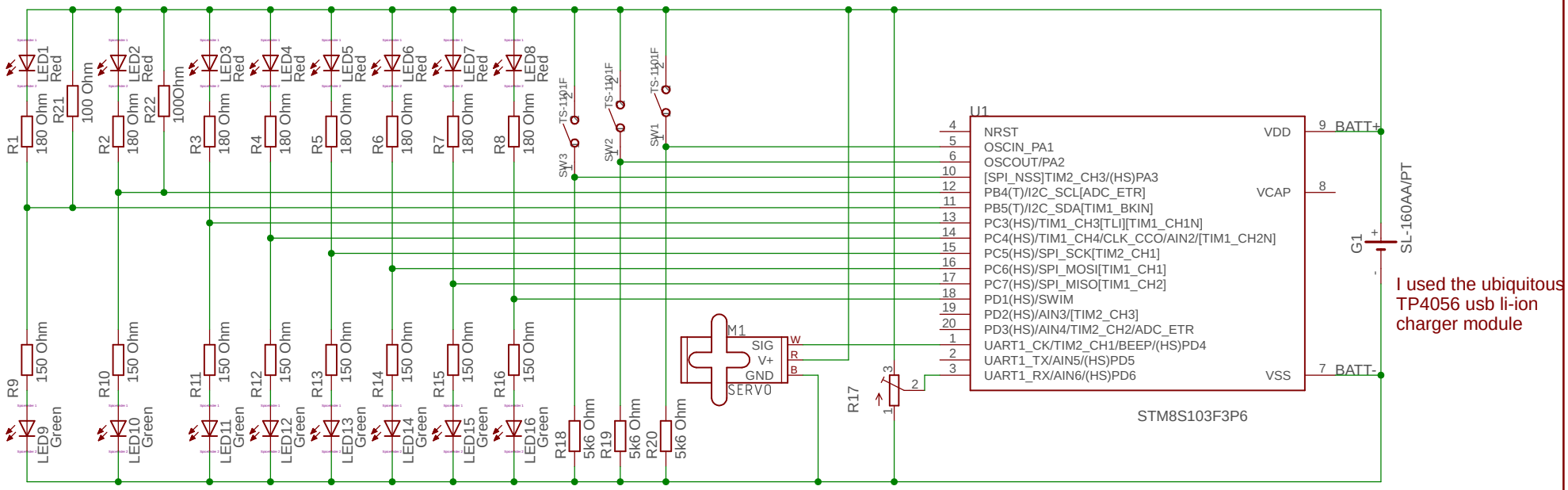

I used the ubiquitous TP4056 usb li-ion charger module

Uses the ubiquitous $1 STM8 breakout board

TITLE: Toy	
Document Number:	REV:
Date: 17/03/2020 18:24	Sheet: 1/1