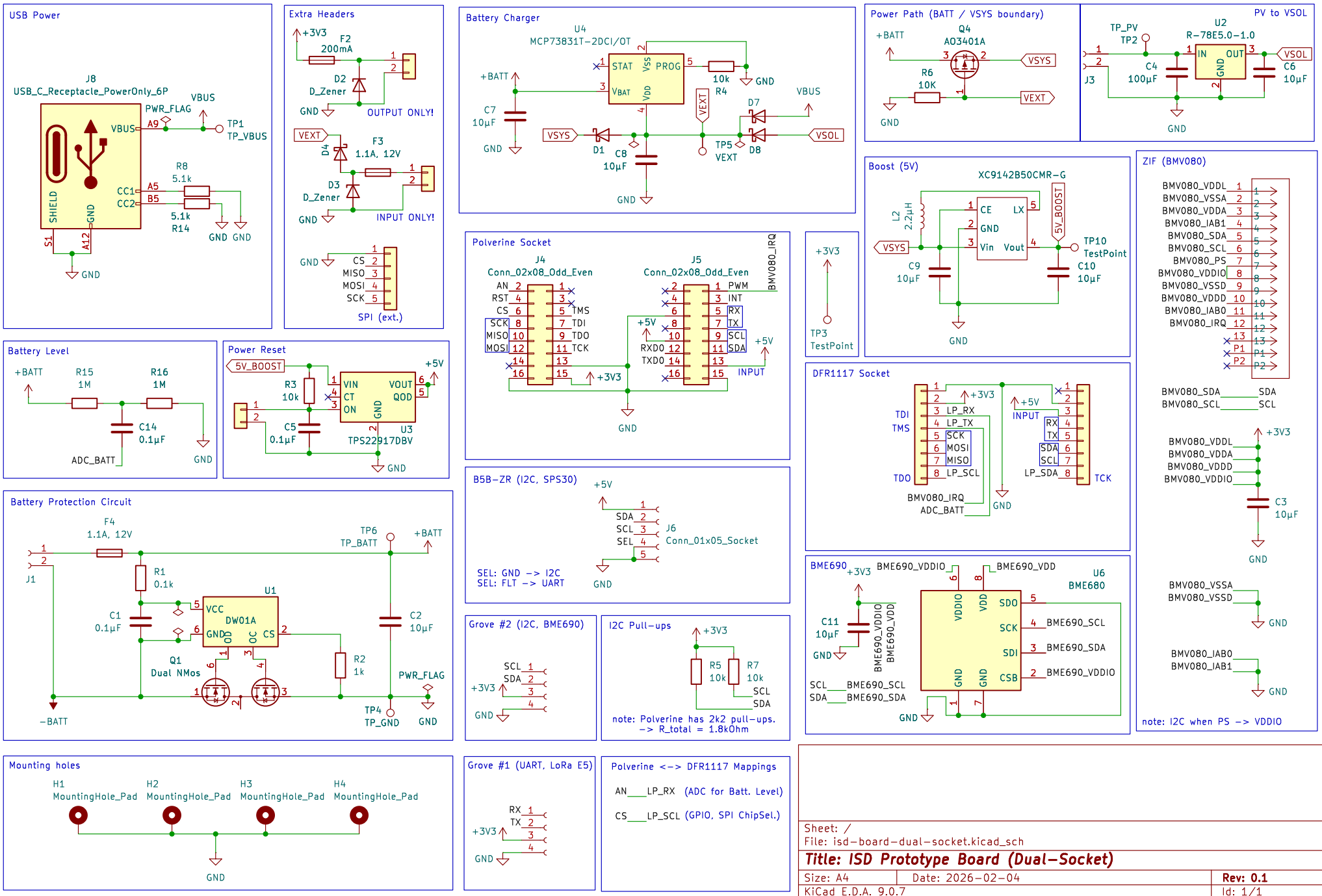
USB Power
J8
USB_C_Receptacle_PowerOnly_6P
VBUS
PWR_FLAG
TP1
TP_VBUS
R8
5.1k
R14
5.1k
GND
Extra Headers
+3V3
F2
200mA
D2
D_Zener
OUTPUT ONLY!
VEXT
F3
1.1A, 12V
D4
D3
D_Zener
INPUT ONLY!
CS
MISO
MOSI
SCK
SPI (ext.)
Battery Charger
U4
MCP73831T-2DCI/OT
STAT
PROG
VBAT
VDD
VSS
+BATT
C7
10µF
VSYS
D1
C8
10µF
10k
R4
VEXT
TP5
VEXT
D7
D8
VSOL
Power Path (BATT / VSYS boundary)
Q4
AO3401A
R6
10K
PV to VSOL
TP_PV
TP2
U2
R-78E5.0-1.0
IN
OUT
GND
C4
100µF
C6
10µF
J3
Boost (5V)
XC9142B50CMR-G
L2
2.2µH
CE
LX
Vin
Vout
5V_BOOST
TP10
TestPoint
C9
10µF
C10
10µF
ZIF (BMV080)
BMV080_VDDL
BMV080_VSSA
BMV080_VDDA
BMV080_IAB1
BMV080_SDA
BMV080_SCL
BMV080_PS
BMV080_VDDIO
BMV080_VSSD
BMV080_VDDD
BMV080_IAB0
BMV080_IRQ
P1
P2
SDA
SCL
C3
10µF
note: I2C when PS -> VDDIO
Battery Level
R15
1M
R16
1M
C14
0.1µF
ADC_BATT
Power Reset
5V_BOOST
R3
10k
C5
0.1µF
VIN
CT
ON
VOUT
QOD
U3
TPS22917DBV
+5V
Polverine Socket
J4
Conn_02x08_Odd_Even
J5
Conn_02x08_Odd_Even
AN
RST
CS
SCK
MISO
MOSI
TMS
TDI
TDO
TCK
PWM
INT
RX
TX
SCL
SDA
RXD0
TXD0
INPUT
BMV080_IRQ
TP3
TestPoint
DFR1117 Socket
LP_RX
LP_TX
LP_SCL
LP_SDA
ADC_BATT
Battery Protection Circuit
F4
1.1A, 12V
J1
TP6
TP_BATT
R1
0.1k
C1
0.1µF
U1
DW01A
VCC
GND
OD
OC
CS
Q1
Dual NMos
R2
1k
C2
10µF
PWR_FLAG
TP4
TP_GND
-BATT
B5B-ZR (I2C, SPS30)
J6
Conn_01x05_Socket
SEL: GND -> I2C
SEL: FLT -> UART
BME690
BME690_VDDIO
BME690_VDD
U6
BME680
C11
10µF
SDO
SCK
SDI
CSB
BME690_SCL
BME690_SDA
Grove #2 (I2C, BME690)
Grove #1 (UART, LoRa E5)
RX
TX
I2C Pull-ups
R5
10k
R7
10k
note: Polverine has 2k2 pull-ups.
-> R_total = 1.8kOhm
Polverine <-> DFR1117 Mappings
AN LP_RX (ADC for Batt. Level)
CS LP_SCL (GPIO, SPI ChipSel.)
Mounting holes
H1
MountingHole_Pad
H2
MountingHole_Pad
H3
MountingHole_Pad
H4
MountingHole_Pad
Sheet: /
File: isd-board-dual-socket.kicad_sch
Title: ISD Prototype Board (Dual-Socket)
Size: A4
Date: 2026-02-04
Rev: 0.1
KiCad E.D.A. 9.0.7
Id: 1/1