A-A (1 : 1)

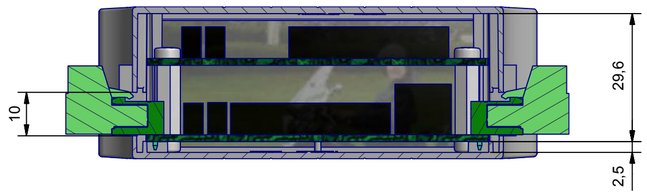

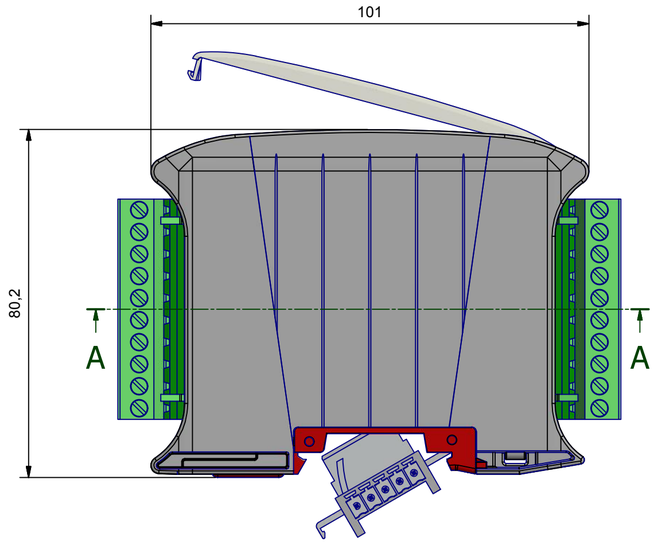

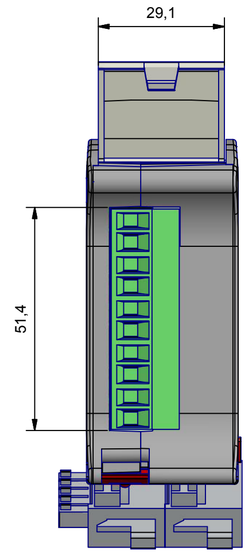

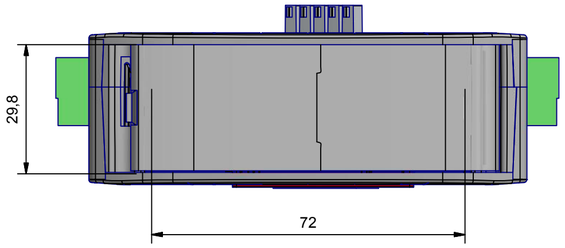

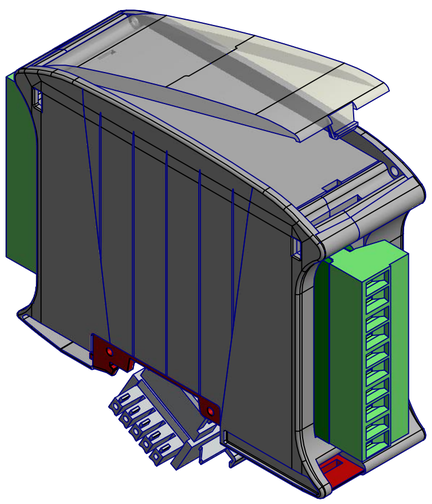

N.B.: ITALTRONIC DOES NOT PROVIDE THE PCB

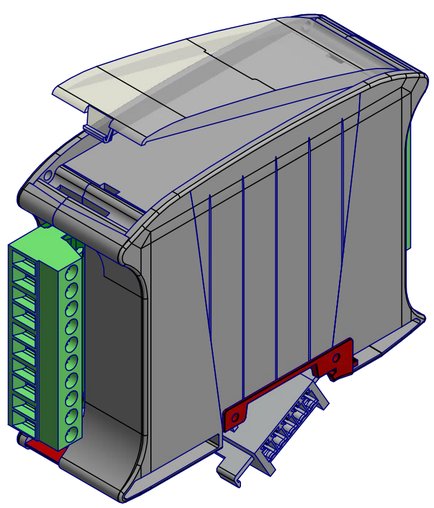

EXAMPLE OF PCB

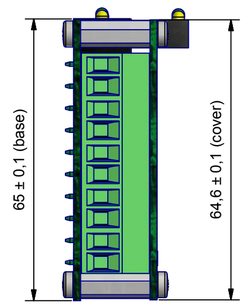

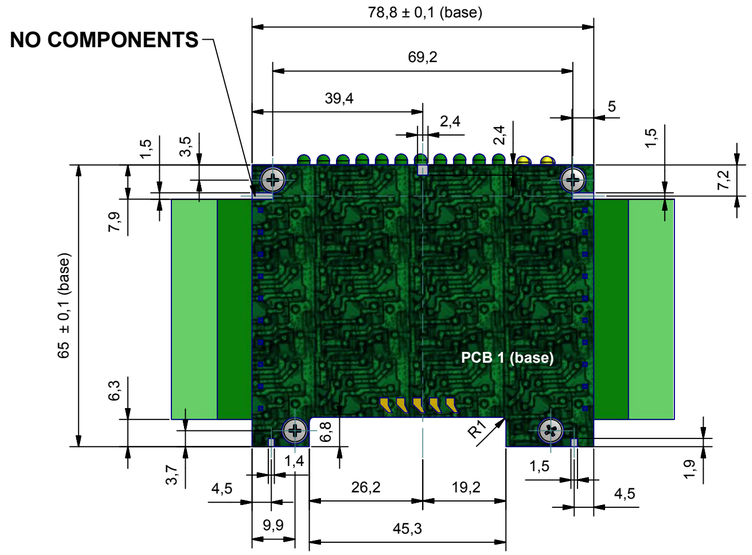

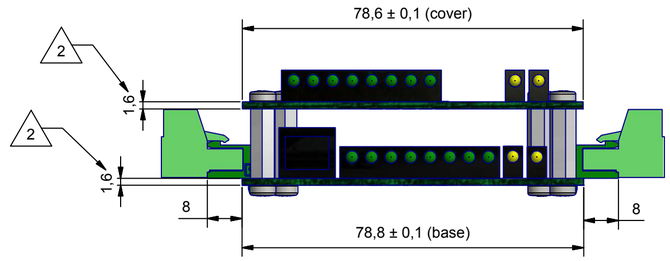

COMPONETS LIST			
RIF.	Q.T	DESCRIPTION	CODE
1	2	COPRIFESSURA - HOLE COVER	R-01234
2	1	MOLLA - SPRING	P10000000M
3	1	SPORTELLO FRONTALE TRASPARENTE 29mm - 29mm FRONT HINGED TRANSPARENT	R-02889
4	1	PANNELLO INTERNO 29 mm - 29 mm INTERNAL PANEL	R-04311
5	1	BASE RAILBOX COMPACT BUS	R-04327
6	1	COPERCHIO RAILBOX COMPACT 22.5 mm BUS - COVER RAILBOX COMPACT 22.5 mm BUS	R-04333
7	1	ACCESSORIO BUS 35 mm - ACCESSORY BUS 35 mm	R-03242
8	2	CONNETTORI T-BUS 17.5mm - CONNECTORS T-BUS 17.5mm	R-03013
9	1	PCB RAILBOX COMPACT 35_BUS	R-04336
10	1	AGGANCIO RAILBOX BUS - HOOK RAILBOX BUS	R-02883

Da 0,5 a 3	Oltre 3 fino a 6	Oltre 6 fino a 30	Oltre 30 fino a 120	Oltre 120
± 0,1	± 0,1	± 0,2	± 0,3	± 0,5

RESERVED PROPERTY

The present drawing cannot be reproduced or comunicated to 3d parties, even partially, without the authorization of ITALTRONIC Srl. Italtronic reserves to protect its own rights according to the law.

Dimension in mm

SHEET NR. 1 / 1

DRAWING BY — Manual modification are not allowed

GENERAL TOLERANCE **UNI EN 22768/1 Media (m)**

Date: 11/02/2013

Replace nr.

Drawed: Rigato N.

Checked: Dalla Montà D.

Scale:

Revision description		
5	Change dimension.	10/10/13 Rigato N.
4		
3		
2	Cambiato formato foglio e aggiunto viste.	08/04/13 Rigato N.
1		

Denomination:

RAILBOX COMPACT 35 mm BUS

ITALTRONIC S.R.L.
VIA AUSTRIA 25/D 35127
PADOVA - ITALY
www.italtronic.com

Drawing nr. R-04332-02