ENGINEERING P/L				
S/N:			STEERING SYSTEM SHEPPARD M100 GEAR, W/HORN	71719
ITEM	**PART #**	**QTY/M**	**DESCRIPTION**	**TASK**
	71719-B1	REF	STEERING SYSTEM	
1	90624-1	1	ASS'Y, STEER COLUMN W/ HORN & TURN SIGNALS	
2	80166	4	SCREW, SLOTTED, 5/16-18 X 1 1/4 LG	
3	91704	2	CLAMP ASS'Y - STEERING	
4	82458	4	BOLT, HEX, 1/4-20 X 3 LG	
5	30222	1	STEERING GEAR, SHEPPARD M100	
6	82487	3	BOLT, HEX, 7/8-9 NC X 3 1/2 LG	
7	85118	6	WASHER, FLAT, 7/8	
8	85030	3	NUT, NYLOCK, 7/8-9 NC	
9	40477	2	FITTING, 45°, #8 ORB X #8 JIC	
10	91554	1	DRAGLINK	
11	80148	2	COTTER PIN, 1/8	
12	61962	REF	PUMP, 20 GPM PRIORITY STEERING	
13	60212	REF	GASKET, HYD PUMP	
14	80175	REF	BOLT, SHS, 10mm x 1.50 x 30mm LG	
15	40802	1	HOSE ASSY - PUMP to STEERING GEAR	
16	41250	1	HOSE ASSY - STEERING GEAR to HYDRAULIC TANK	
17	42006	1	STR ADAPTER @ PUMP - 1/2" ORB TO 1/2" JIC	
REV	**DATE**	**BY**		**SHEET**
				1 OF 1
TICO MANUFACTURING - RIDGELAND, SC 29936				

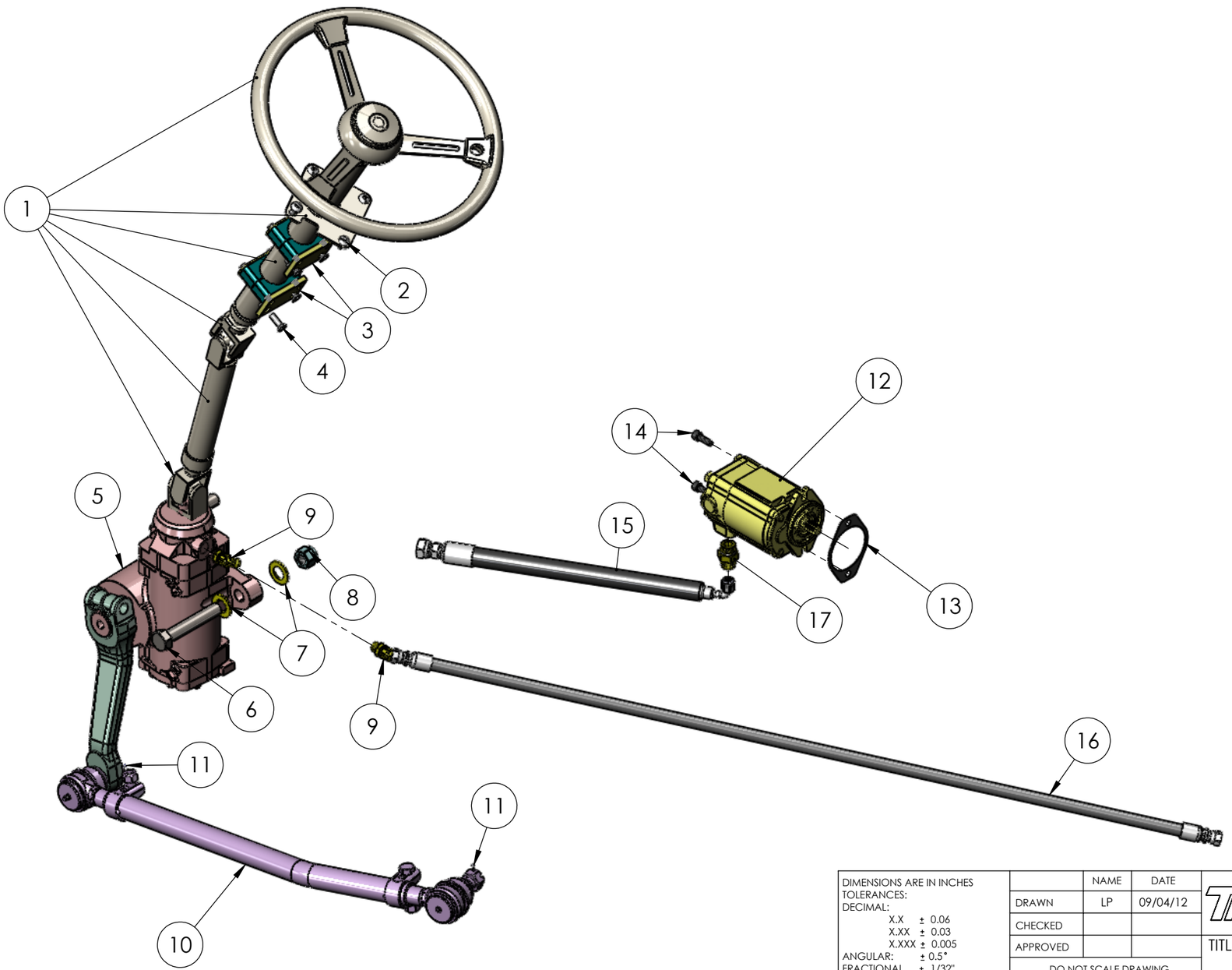

DIMENSIONS ARE IN INCHES TOLERANCES: DECIMAL: X.X ± 0.06 X.XX ± 0.03 X.XXX ± 0.005 ANGULAR: ± 0.5° FRACTIONAL ± 1/32"		NAME	DATE
	DRAWN	LP	09/04/12
	CHECKED		
	APPROVED		
	DO NOT SCALE DRAWING		
INTERPRET GEOMETRIC TOLERANCING PER: ASME 14.5M-1994	THE SUBJECT MATTER SHOWN AND DESCRIBED IN THIS DRAWING AND ANY OTHER INFORMATION ADVANCED IN CONNECTION THEREWITH, IS PROPRIETARY PROPERTY AND IS TO BE HELD IN STRICT CONFIDENCE BY YOU. ALL RIGHTS TO ANY INVENTIONS, DESIGNS, TRADE MARKS, TRADE NAMES AND COPYRIGHTS DISCLOSED ARE RESERVED TO TICO TERMINAL SERVICES, INC.		
MATERIAL			
FINISH			
THICKNESS			

TICO/TERMINAL SERVICE
66 CYPRESS RIDGE DR.
RIDGELAND, SC 29936
(843) 717-2226

TITLE:

STEERING SYSTEM

SIZE	DWG. NO.	REV
B	71719-B1	
SCALE: 1:9	WEIGHT:	SHEET 1 OF 1