REV.	DESCRIPTION	ECN	DATE	APPROVED
A	PRODUCTION RELEASE	11383	8/8/11	HK

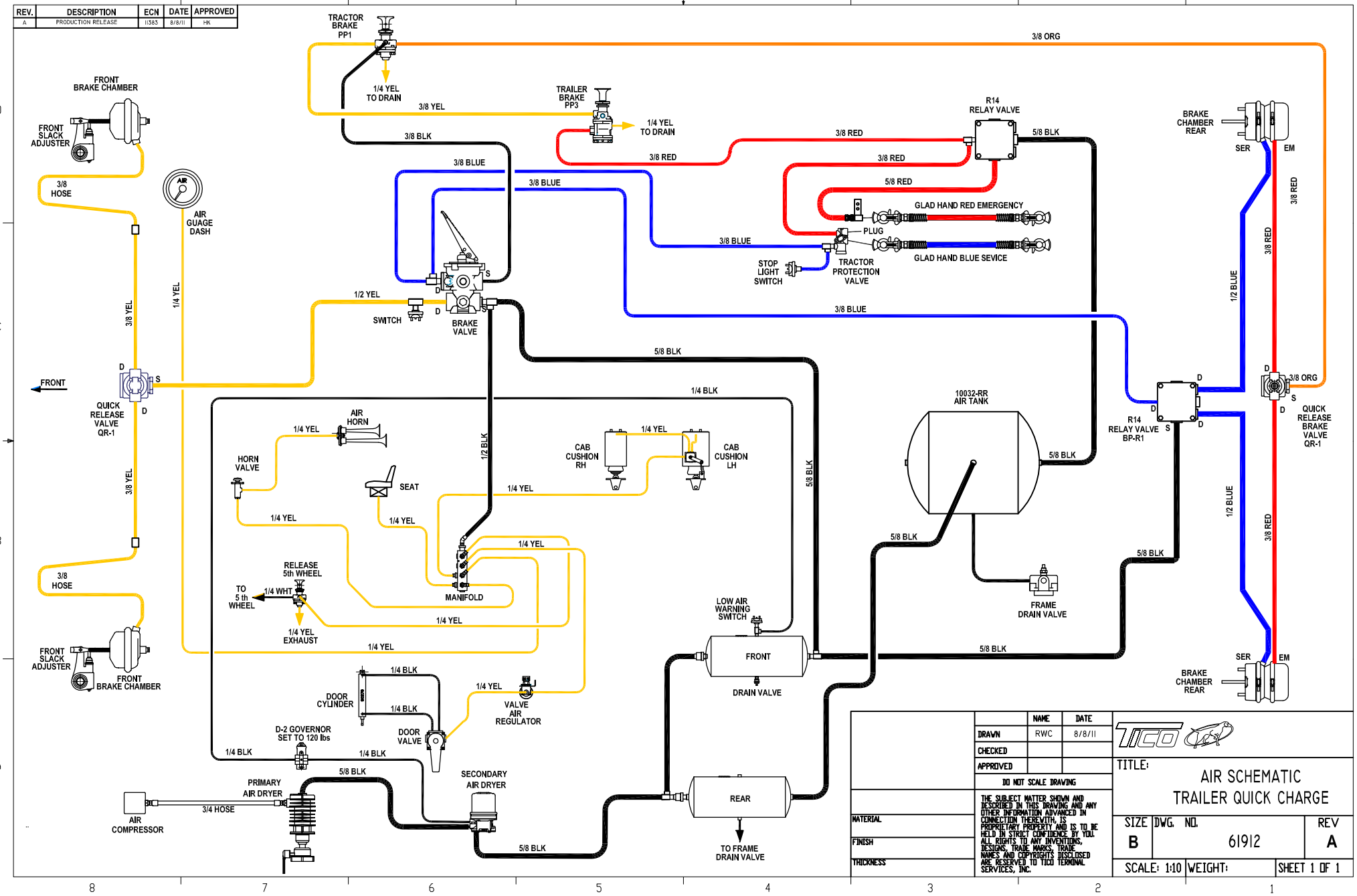

	NAME	DATE
DRAWN	RWC	8/8/11
CHECKED		
APPROVED		

DO NOT SCALE DRAWING

MATERIAL

FINISH

THICKNESS

THE SUBJECT MATTER SHOWN AND DESCRIBED IN THIS DRAWING AND ANY OTHER INFORMATION ADVANCED IN CONNECTION THEREWITH, IS PROPRIETARY PROPERTY AND IS TO BE HELD IN STRICT CONFIDENCE BY YOU. ALL RIGHTS TO ANY INVENTIONS, DESIGNS, TRADE MARKS, TRADE NAMES AND COPYRIGHTS DISCLOSED ARE RESERVED TO TICO TERMINAL SERVICES, INC.

TITLE:

AIR SCHEMATIC TRAILER QUICK CHARGE

SIZE	DWG. NO.	REV
B	61912	A

SCALE: 1:10 | WEIGHT: | SHEET 1 OF 1