TICO PRO-SPOTTER				
S/N:			AIR HORN WITH PULL CABLE	71194
ITEM	PART #	QTY/M	DESCRIPTION	TASK
	71194-E1	REF	AIR HORN WITH PULL CABLE	
1	90055	1	HORN-AIR	
2	82370	3	CAPSCREW-1/4-20NC X 1 LG HEX HD	
3	85111	3	WASHER, 1/4	
4	85034	3	LOCKNUT, 1/4	
5	40887	1	FITTING, 90°, BRASS, 1/4 TUBE X 3/8 NPT	
6	11000	3 FT	TUBING, 1/4, YW	
7	12169	1	GUARD, AIR LINES	
8	82360	2	BOLT, 5/16 NC X 3/4 LG	
9	85024	2	NUT, 5/16 NC	
10	90669	1	COVER, AIR HORN HOLES	
11	40829	2	BULKHEAD COUPLING, 1/4	
12	40861	4	FITTING, 90°, BRASS, 1/4 TUBE X 1/4 NPT	
13	90482	1	VALVE, AIR HORN PULL CABLE	
14	80202	2	SCREW, PAN HD, 10-32 X 3" LG	
15	80232	6	WASHER, FLAT, 10-32	
16	80209	2	LOCKNUT, NYLOCK, 10-32	
17	40886	1	PUSH CONNECT, STR, 1/4 TUBE TO 1/8 NPT	
18	11003	8 FT	TUBING, 1/4 IN BLK	
19	40860	1	PUSH CONNECT, 90°, 1/4 TUBE TO 1/8 NPT, SWIVEL	
20	3385T18	20 IN	CHAIN, SASH, PLATED FLAT LINK, SIZE NO. 12	
NOT SHOWN	12408	REF	VALVE LOCATION	
REV	DATE	BY		SHEET
				1 OF 1

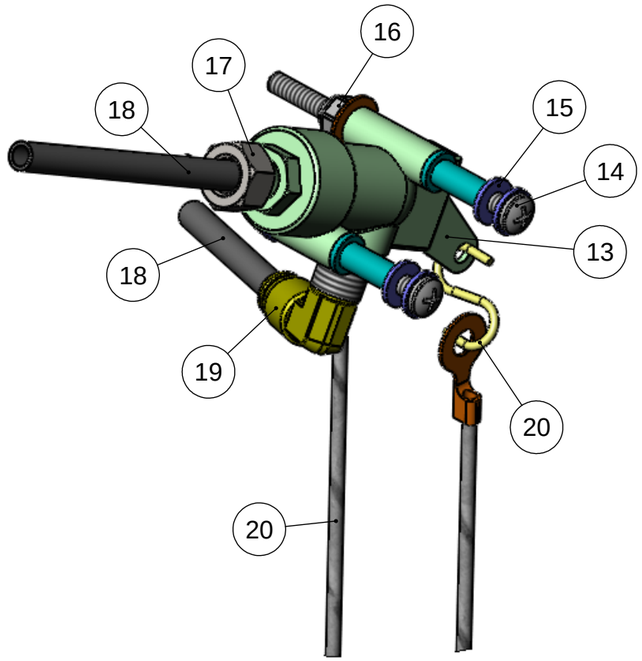

DETAIL B
SCALE 3 : 4

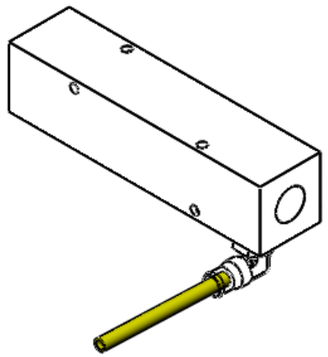

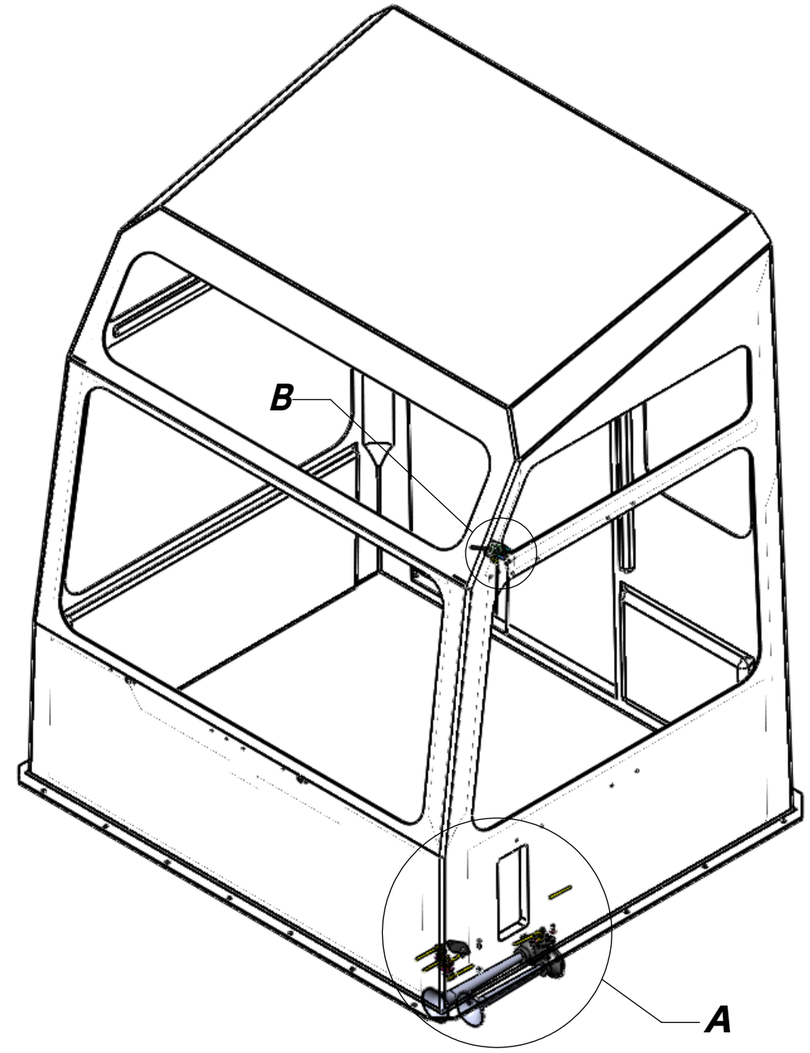

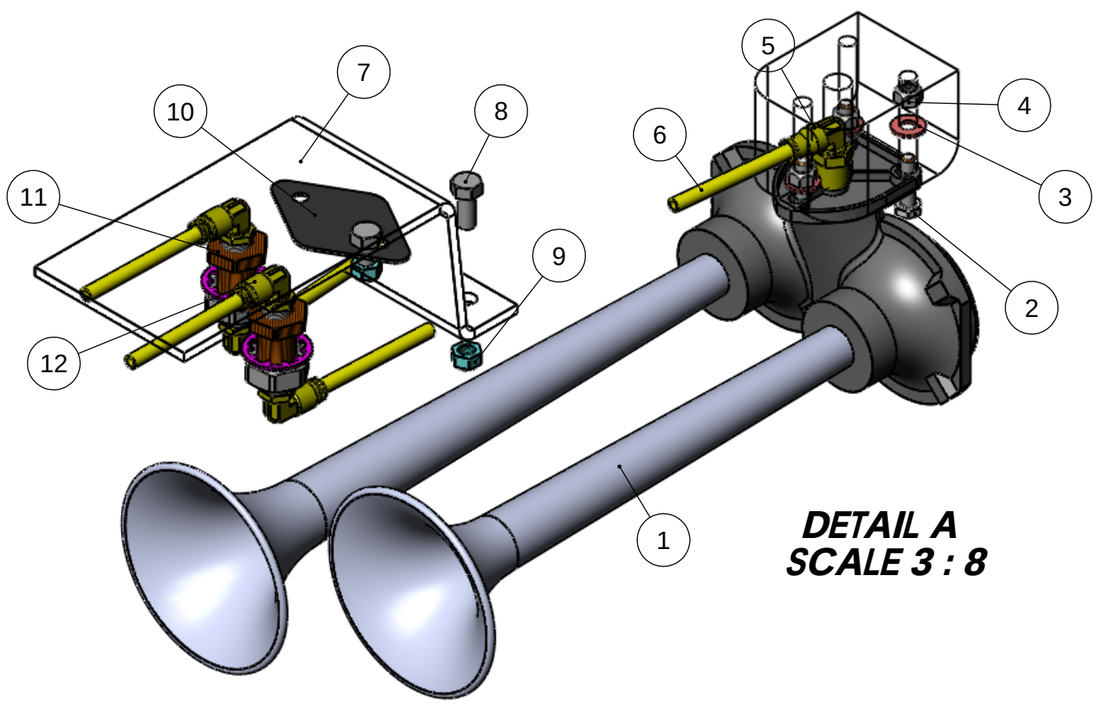

DETAIL A
SCALE 3 : 8

DIMENSIONS ARE IN INCHES TOLERANCES: DECIMAL: X.X ± 0.06 X.XX ± 0.03 X.XXX ± 0.005 ANGULAR: ± 0.5° FRACTIONAL ± 1/32"		NAME	DATE
	DRAWN	RWC	9/3/10
	CHECKED		
	APPROVED		
	DO NOT SCALE DRAWING		
INTERPRET GEOMETRIC TOLERANCING PER: ASME 14.5M-1994	THE SUBJECT MATTER SHOWN AND DESCRIBED IN THIS DRAWING AND ANY OTHER INFORMATION ADVANCED IN CONNECTION THEREWITH, IS PROPRIETARY PROPERTY AND IS TO BE HELD IN STRICT CONFIDENCE BY YOU. ALL RIGHTS TO ANY INVENTIONS, DESIGNS, TRADE MARKS, TRADE NAMES AND COPYRIGHTS DISCLOSED ARE RESERVED TO TICO TERMINAL SERVICES, INC.		
MATERIAL			
FINISH			
THICKNESS			

TICO/TERMINAL SERVICE
66 CYPRESS RIDGE DR.
RIDGELAND, SC 29936
(843) 717-2226

TITLE:
AIR HORN WITH PULL CABLE

SIZE	DWG. NO.	REV
B	71194-E1	E1

SCALE: 1:16 | SHEET 1 OF 1