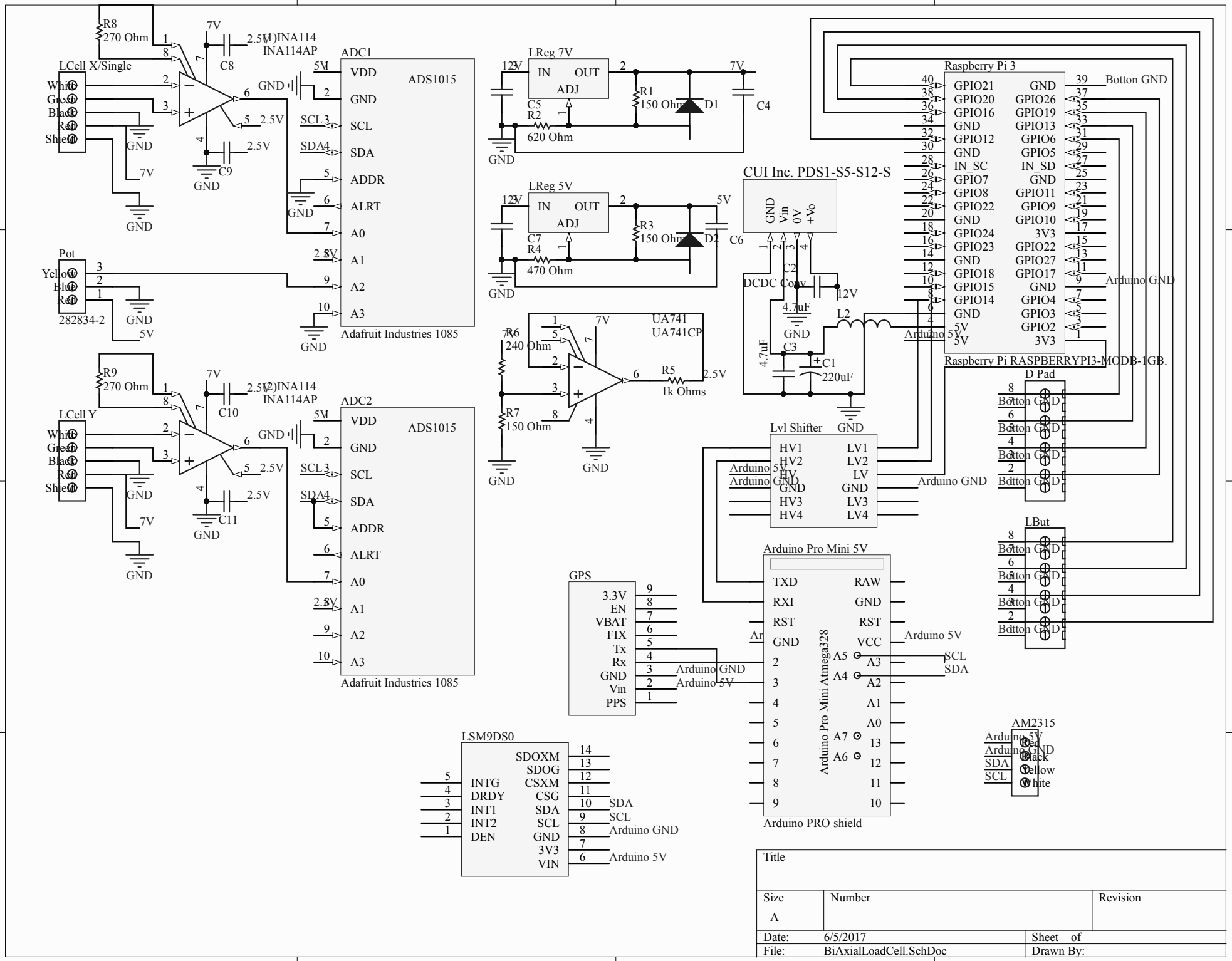

Title		
Size A	Number	Revision
Date: 6/5/2017		Sheet of
File: BiAxialLoadCell.SchDoc		Drawn By:

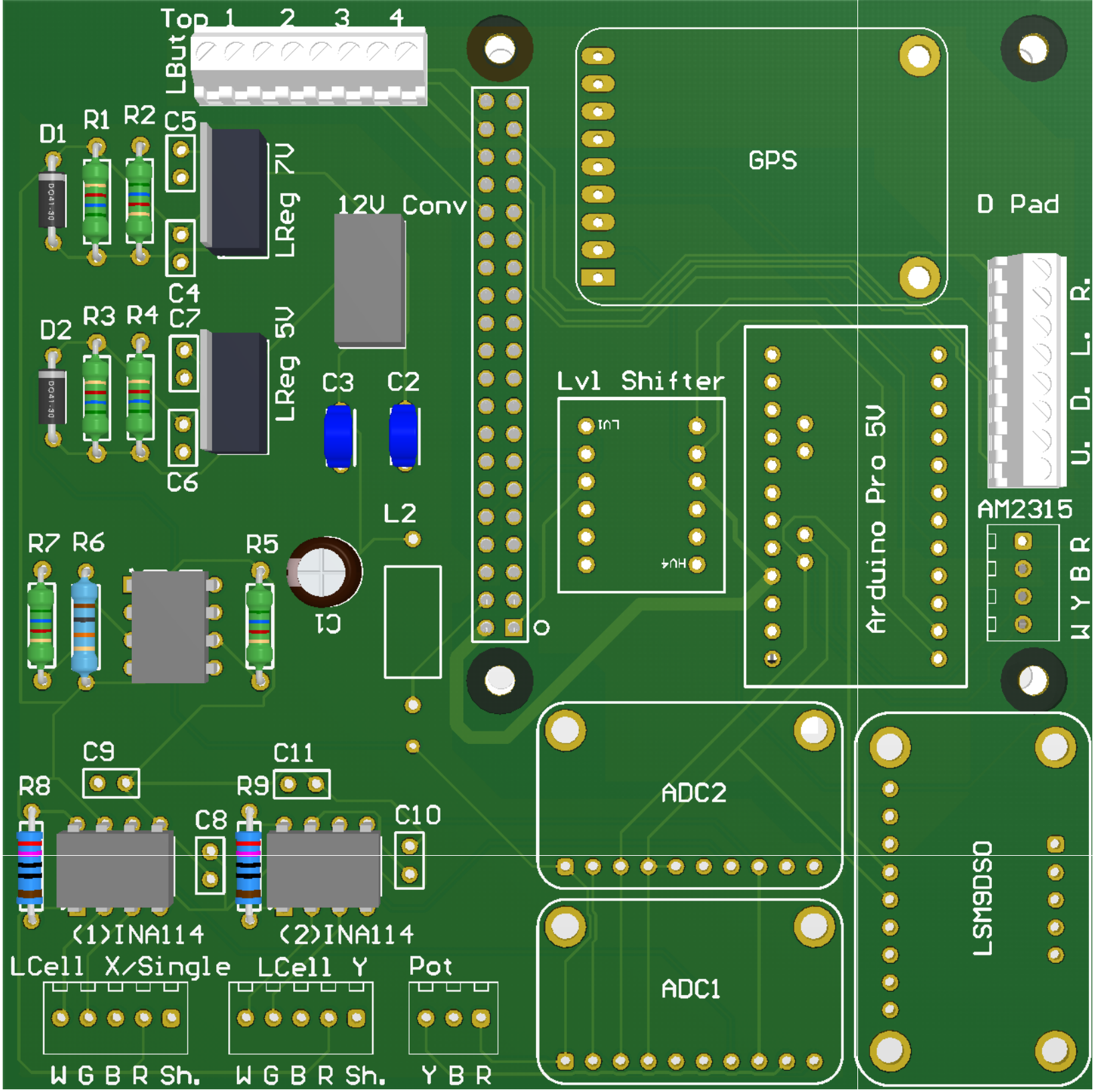
Top 1 2 3 4
LBut
D1
R1
R2
C5
LReg 7V
C4
12V Conv
GPS
D Pad
D2
R3
R4
C7
LReg 5V
C6
C3
C2
Lvl Shifter
LV1
HV4
Arduino Pro 5V
R. L. D. U.
AM2315
W Y B R
L2
R7
R6
R5
C1
C9
C11
R8
R9
C8
C10
ADC2
ADC1
LSM9DS0
(1)INA114
(2)INA114
LCell X/Single
LCell Y
Pot
W G B R Sh.
W G B R Sh.
Y B R

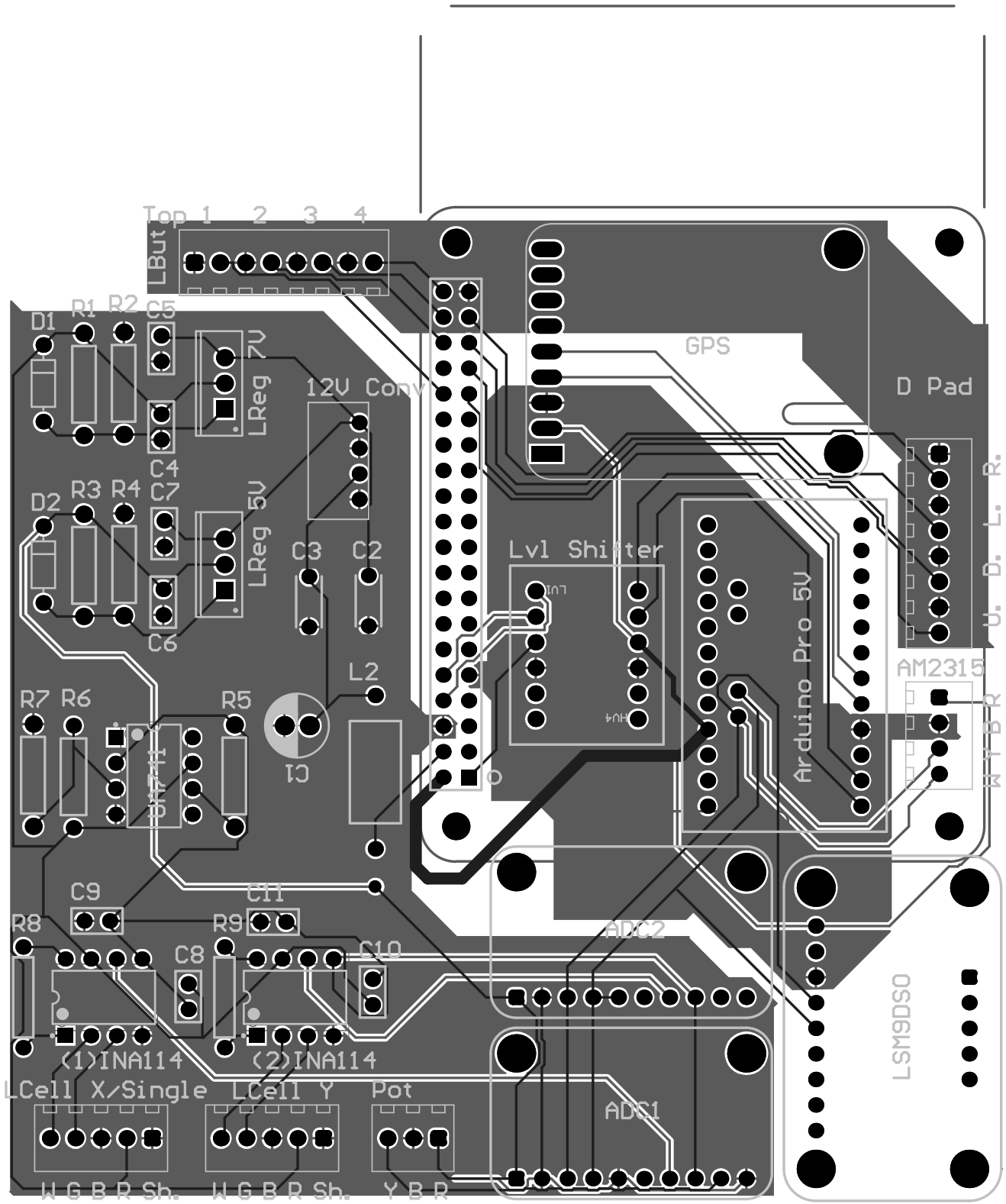
Top 1 2 3 4
LBut
D1 R1 R2 C5
LReg 7V
12V Conv
C4
D2 R3 R4 C7
LReg 5V
C6
C3 C2
L2
R7 R6 R5
C1
C9
C11
R8 R9
C8 C10
(1)INA114
(2)INA114
LCell X/Single
LCell Y
Pot
W G B R Sh.
W G B R Sh.
Y B R
GPS
Lvl Shifter
ADC2
ADC1
Arduino Pro 5V
D Pad
U. D. L. R.
AM2315
W Y B R
LSM9DS0

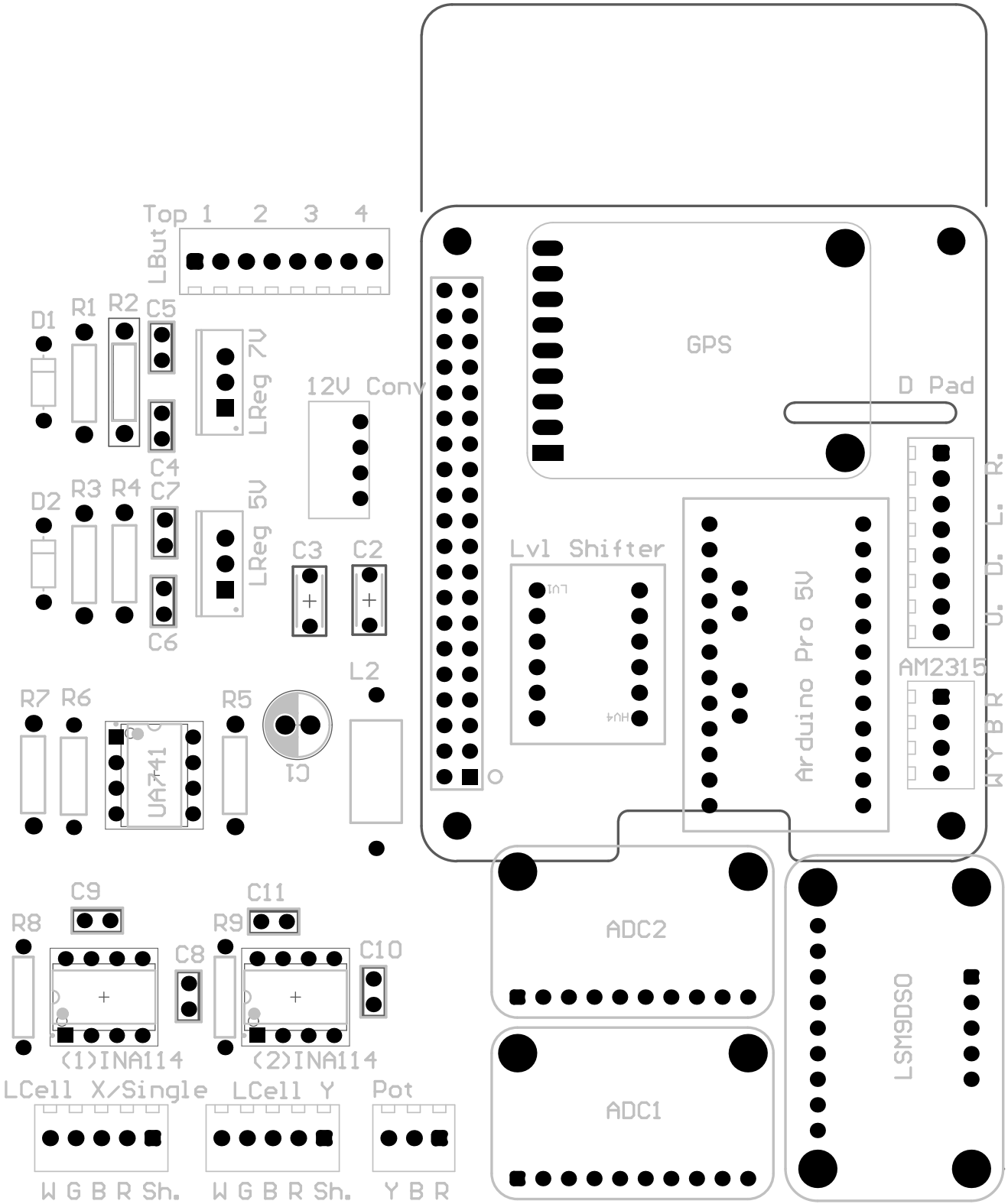
Top 1 2 3 4
LBut
D1
R1
R2
C5
C4
LReg 7V
12V Conv
D2
R3
R4
C7
C6
LReg 5V
C3
C2
R7
R6
UA741
R5
C1
L2
C9
R8
C8
C11
R9
C10
(1)INA114
(2)INA114
LCell X/Single
LCell Y
Pot
W G B R Sh.
W G B R Sh.
Y B R
GPS
D Pad
Lvl Shifter
Arduino Pro 5V
AM2315
U. D. L. R.
W Y B R
ADC2
ADC1
LSM9DS0