Overview: Recognizing 3D surfaces

Donald Campbell

Summary

An overview of different three-dimensional surfaces with their corresponding equations.

Before reading this overview, it is recommended that you read [Guide: Introduction to polar coordinates], [Overview: Recognizing 2D curves] and [Guide: Introduction to 2D conic sections].

What is a 3D surface?

When graphs first appear in mathematics, they are often shown as curves in a plane. A **point** is described by two coordinates (x, y), and a **curve** $(x, f(x))$ shows how one variable depends on the other by some function $f(x)$ of x. In this overview, the focus shifts up one dimension to shapes in three dimensions, expanding upon what you learned in [Overview: Recognizing 2D curves]. These shapes are called **surfaces**.

In three-dimensional space, each point has three coordinates (x, y, z). It is helpful to think of x and y as a position in a horizontal plane, and z as the height above or below that plane. A surface is a collection of points (x, y, z) that fit a particular rule.

> **Definition of a 3D surface**
>
> A **3D surface** is a set of points (x, y, z) that satisfy an equation.
> There are two common ways to write such an equation.
>
> - A graph of a function of two variables has an equation of the form $z = f(x, y)$. This is an equation in terms of x and y, where z is the subject. For each pair (x, y) in the domain of the function, the equation gives a height z. The surface is the set of all points (x, y, z) with that height.
> - A **level surface** has an equation of the form $F(x, y, z) = c$ for some constant c. For example, the equation $x^2 + y^2 + z^2 = 4$ describes a sphere of radius $\sqrt{4} = 2$. Every point on that sphere satisfies the equation.

Sometimes a level surface can be rewritten as a graph of a function of two variables. For instance, solving

$$x^2 + y^2 + z^2 = 4$$

for z gives

$$z = \sqrt{4 - x^2 - y^2} \quad \text{and} \quad z = -\sqrt{4 - x^2 - y^2}$$

which represent the upper and lower halves of the same sphere. In other situations, it is not convenient or even possible to solve explicitly for z, so the level surface description is more useful.

This overview concentrates on a small number of important families of surfaces. The aim is to recognize these surfaces from their equations and from their graphs. Throughout this overview, interactive graphs provide a way to explore surfaces directly. These graphs can be rotated, zoomed, and inspected from different viewpoints. The first example below shows a surface given by an equation of the form $z = f(x, y)$.

The graph below shows a surface of the form $z = ax^2 - by^2 + c$. The figure illustrates how a quadratic expression in two variables defines a three-dimensional surface. You will learn more about this specific graph later.

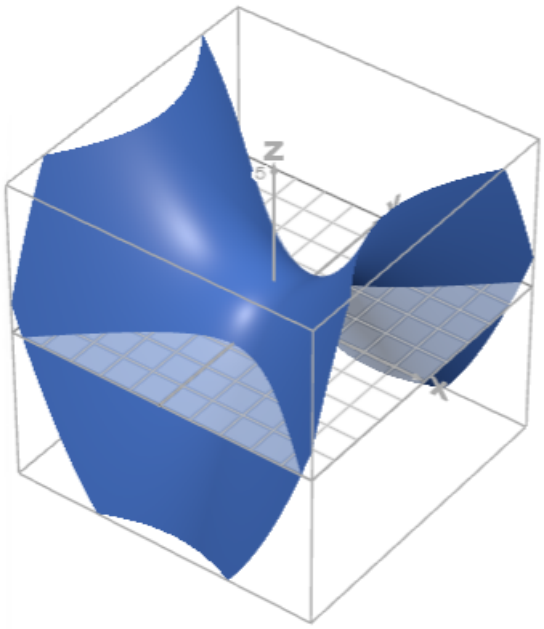

Figure 1: A general surface of the form $z = ax^2 - by^2 + c$.

Seeing surfaces by slicing them

A full view of a surface often contains many features at once. A helpful way to focus on part of the surface is to cut it with a plane and study the slice. A slice is created by fixing one coordinate and allowing the other two coordinates to vary. The result is a curve that lies in a plane.

- Fixing a value of z (for example $z = c$) gives a **horizontal slice**. The equation of the

surface then becomes a relation between x and y in the xy-plane.

- Fixing a value of x or y (for example $x = a$ or $y = b$) gives a **vertical slice**. The surface is viewed inside a vertical plane.

Each slice is a two-dimensional picture of part of the surface. By combining several slices, it is possible to build a mental image of the full three-dimensional shape.

Definition of cross-sections and traces

A **cross-section** of a surface is the set of points that lie on both the surface and a given plane.
A **trace** is a cross-section taken in a plane parallel to one of the coordinate planes. Common examples include:

- the trace in the plane $z = c$ (a horizontal slice)
- the trace in the plane $x = a$ or $y = b$ (a vertical slice)

These traces are curves in two dimensions that describe how the surface behaves along that slice.

Many surfaces in this overview are recognized by the appearance of their traces. For a surface like a sphere, horizontal traces $z = c$ are circles of different radii.

The curves that appear in these slices are often circles, ellipses, parabolas or hyperbolas. These curves are examples of **conic sections**. Their detailed properties, and the different algebraic forms they can take, are explained in [Guide: Introduction to 2D conic sections]. In this overview, they act as a language for describing what the slices of a three-dimensional surface look like.

The graphs below show the surface $z = f(x, y)$ together with a vertical slice in the plane $y = a$. Changing a moves the plane and updates the yellow intersection curve. The graph on the right shows this same curve as a two-dimensional trace $z = f(x, a)$ in the xz-plane. The pair of graphs illustrates how vertical slices reveal the structure of a surface.

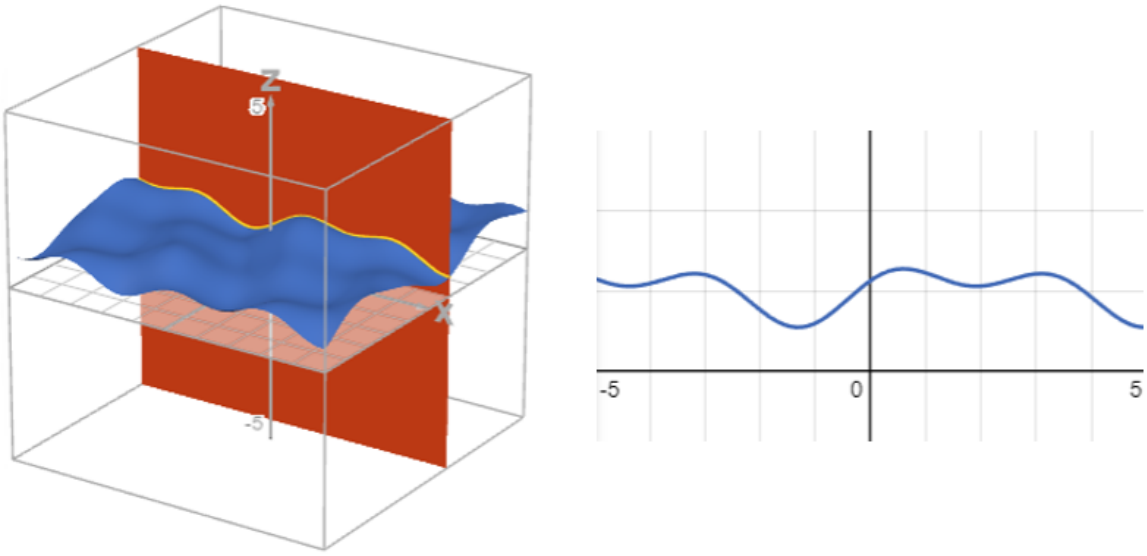

Figure 2: Intersection of the surface $z = f(x, y)$ with the plane $y = a$, shown with its 2D trace $z = f(x, a)$.

Planes

A plane is a completely flat surface that extends without bound in every direction inside that flat sheet. In two dimensions, straight lines play this role. In three dimensions, planes do.

A plane can be described by a single linear equation in the three variables x, y and z.

Definition of a plane

A **plane** in a three-dimensional space is a surface given by an equation of the form

$$ax + by + cz = d$$

where a, b, c and d are constants, and at least one of a, b and c is non-zero.
Another common way to write the equation of a plane is

$$z = mx + ny + c$$

provided c here is a constant and the equation is linear in x and y.

The numbers a, b and c control the orientation of the plane. Changing these values tilts the plane in different directions. The constant d controls where the plane sits in space. Changing this value moves the plane parallel to itself without changing its orientation.

A quick way to recognize the equation of a plane is to look at the powers of the variables. In

the examples above, x, y and z only appear to the first power. There are no squared terms such as x^2 or z^2, and there are no products such as xy or yz. Any equation of this form describes a plane.

Example 1

Consider the equation

$$z = 2 - x - \frac{1}{2}y.$$

Every point (x, y, z) on this plane satisfies this rule. For instance:

- When $x = 0$ and $y = 0$, the equation gives $z = 2$, so the point $(0, 0, 2)$ lies on the plane.
- When $x = 2$ and $y = 0$, the equation gives $z = 0$, so the point $(2, 0, 0)$ lies on the plane.
- When $x = 0$ and $y = 4$, the equation gives $z = 0$, so the point $(0, 4, 0)$ lies on the plane.

These three points do not lie on a straight line. The plane passes through all of them, and through every other point that satisfies the equation.

Planes often appear as slices of other surfaces. For example, taking the cross-section of a curved surface with a plane produces a curve. Later sections will use planes to cut through spheres, cylinders and other shapes. In each case, the points of intersection are those that satisfy both equations at once (the equation of the plane and the equation of the curved surface).

The graph below shows a plane described by $z = ax + by + c$. The coefficients a and b determine the tilt of the plane, while c shifts it vertically. Because the equation contains only first powers of the variables, the resulting surface is flat in every direction. The figure illustrates how linear equations describe planes in three-dimensional space.

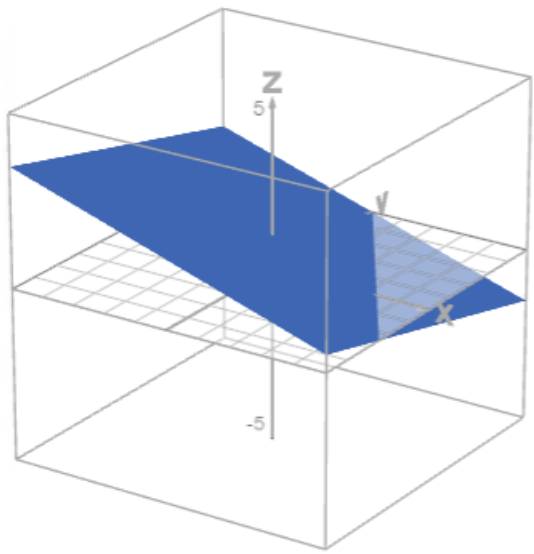

Figure 3: Plane given by $z = ax + by + c$, with parameters a, b and c controlling tilt and height.

Spheres and ellipsoids

Spheres and ellipsoids are closed surfaces that curve in all directions. A sphere has the same radius in every direction, whereas an ellipsoid can be thought of as a stretched or squashed sphere.

Both shapes have a pattern in their equations as every variable appears squared, and all squared terms have the same sign.

Definition of a sphere

A **sphere** of radius $r > 0$ centred at (h, k, l) is the set of points (x, y, z) that satisfy

$$(x - h)^2 + (y - k)^2 + (z - l)^2 = r^2$$

When the centre is at the origin, the equation simplifies to

$$x^2 + y^2 + z^2 = r^2$$

The equation of a sphere contains three squared terms with the same coefficient and the same sign. There are no mixed products such as xy or yz, and there are no higher powers such as x^3.

An ellipsoid has a similar structure, but its equation has different coefficients in front of the squared terms. These different coefficients stretch or squash the sphere along the coordinate

axes.

Definition of an ellipsoid

An **ellipsoid** centred at the origin has an equation of the form

$$\frac{x^2}{a^2} + \frac{y^2}{b^2} + \frac{z^2}{c^2} = 1$$

where a, b and c are positive constants.
The numbers a, b and c control how much the ellipsoid extends along the x-, y- and z-axes.

A quick recognition rule is:

- all three variables x, y and z appear squared
- the squared terms all have the same sign
- there are no cross terms such as xy and no higher powers.

If all three coefficients are equal, the surface is a sphere. If the coefficients differ, the surface is an ellipsoid.

Slicing gives a geometric picture. For an ellipsoid

$$\frac{x^2}{a^2} + \frac{y^2}{b^2} + \frac{z^2}{c^2} = 1$$

a horizontal slice at height $z = k$ gives

$$\frac{x^2}{a^2} + \frac{y^2}{b^2} = 1 - \frac{k^2}{c^2}$$

- When $|k| < c$, the right-hand side is positive and this equation describes an ellipse in the xy-plane.
- When $|k| = c$, the right-hand side is zero and the slice reduces to a single point on the top or bottom of the ellipsoid.
- When $|k| > c$, there are no real solutions, so the horizontal slice does not meet the ellipsoid.

For a sphere, a similar description applies, but with $a = b = c = r$. Horizontal slices are circles of different radii. Vertical slices in a plane such as $x = a_0$ or $y = b_0$ are also circles.

Circles and ellipses are conic sections. Their algebraic forms and geometric features are described in [Guide: Introduction to 2D conic sections]. In this overview, they help describe how spheres and ellipsoids change with height.

The graphs below show an ellipsoid $\frac{x^2}{a^2} + \frac{y^2}{b^2} + \frac{z^2}{c^2} = 1$ cut by a plane $z = k$. Changing parameters a, b and c control the axis lengths, while k controls the height of the slicing plane. The intersection curve appears in yellow, and the 2D graph shows its equation $\frac{x^2}{a^2}+\frac{y^2}{b^2} = 1-\frac{k^2}{c^2}$. Depending on the value of k, this slice may be an ellipse ($|k| < c$), a single point ($|k| = c$), or non-existent ($|k| > c$).

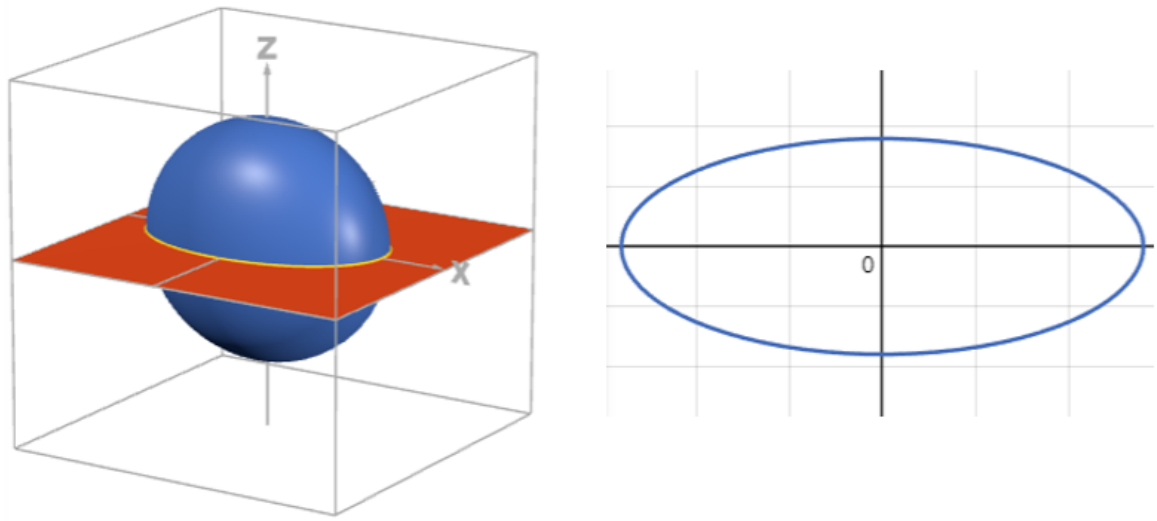

Figure 4: Ellipsoid $\frac{x^2}{a^2} + \frac{y^2}{b^2} + \frac{z^2}{c^2} = 1$ with horizontal slice $z = k$, showing the ellipse $\frac{x^2}{a^2} + \frac{y^2}{b^2} = 1 - \frac{k^2}{c^2}$.

Paraboloids and saddles

Paraboloids are three-dimensional relatives of parabolas. They are curved surfaces that can look like a bowl or like a saddle, depending on the signs of the squared terms in their equations.

A common starting point is a surface of the form

$$z = ax^2 + by^2$$

where a and b are constants. The values of a and b control the curvature in the x- and y-directions.

Elliptic paraboloid

An **elliptic paraboloid** has an equation that can be written in the form

$$z = ax^2 + by^2 + c$$

with $a > 0$ and $b > 0$.

The point where both x and y are zero is the lowest point of the surface when a and b are positive. The surface curves upwards in all horizontal directions from this point. Vertical traces in planes such as $x = x_0$ or $y = y_0$ are parabolas. Horizontal slices $z = k$ give ellipses, provided the level is below the "rim" of the surface.

This surface resembles a bowl. The cross-sections by vertical planes are parabolic curves, which connect with the two-dimensional parabolas in [Guide: Introduction to 2D conic sections].

Changing the signs of the coefficients creates a very different shape.

Hyperbolic paraboloid

A **hyperbolic paraboloid** has an equation of the form

$$z = ax^2 - by^2$$

with $a > 0$ and $b > 0$.
Along lines where y is fixed at zero, the equation becomes $z = ax^2$, so the trace is an upward-opening parabola. Along lines where x is fixed at zero, the equation becomes $z = -by^2$, so the trace is a downward-opening parabola.
The surface bends up in one direction and down in the perpendicular direction. This gives a saddle shape.

Horizontal slices of a hyperbolic paraboloid show further structure.

For values of z away from zero, the equation $z = ax^2 - by^2$ can be rearranged to give

$$\frac{x^2}{|z|/a} - \frac{y^2}{|z|/b} = \pm 1$$

depending on the sign of z. These slices are hyperbolas, with the sign on the right-hand side depending on whether z is positive or negative.

A useful recognition rule for surfaces written in the form $z = f(x, y)$ is:

- if the squared terms in x and y have the **same sign**, the surface is bowl-shaped (an elliptic paraboloid).
- if the squared terms in x and y have **opposite signs**, the surface is saddle-shaped (a hyperbolic paraboloid).

The graphs below display the surface $z = ax^2 + by^2$ together with a slice $z = k$. Adjusting a and b changes the curvature so that the surface becomes either a bowl-shaped elliptic paraboloid or a saddle. The slice equation is $ax^2 + by^2 = k$, shown as a yellow curve in

the 3D graph and in the corresponding 2D cross-section. The figure illustrates how changing parameters affects both the surface and its traces.

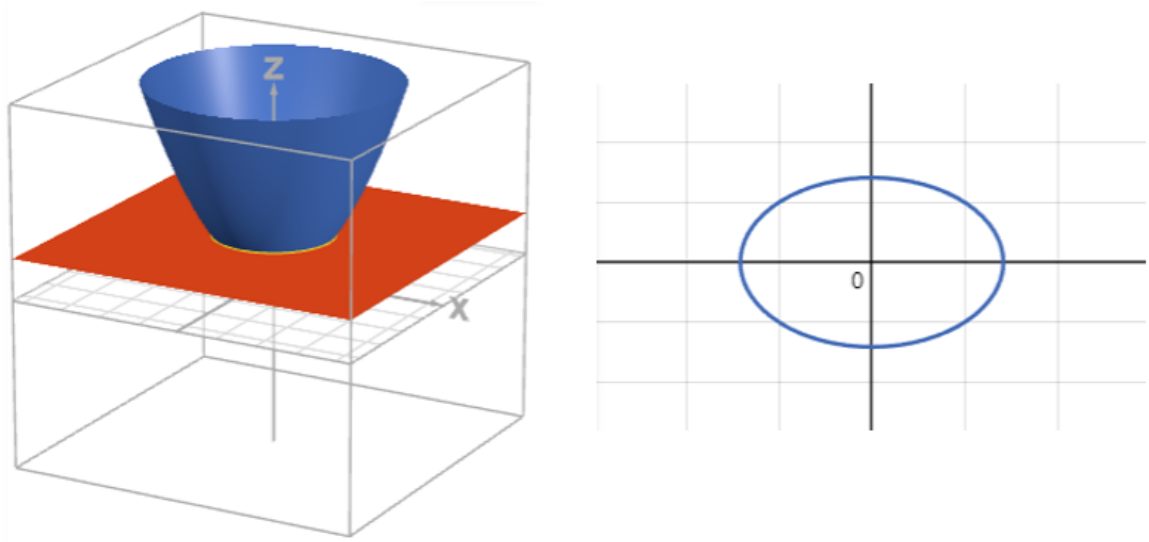

Figure 5: Surface $z = ax^2 + by^2$ with horizontal slice $z = k$, giving the cross-section $ax^2 + by^2 = k$.

Cones and hyperboloids

Cones and hyperboloids are part of the same family of quadratic surfaces. Their equations involve squared terms in x, y and z with **mixed signs**, in contrast to spheres and ellipsoids where all squared terms have the same sign.

A useful family to keep in mind is

$$\frac{x^2}{a^2} + \frac{y^2}{b^2} - \frac{z^2}{c^2} = k$$

where a, b and c are positive constants and k is a constant that can take different values.

Double cone

Consider the family

$$\frac{x^2}{a^2} + \frac{y^2}{b^2} - \frac{z^2}{c^2} = k$$

where a, b and c are positive constants and k is a constant that can take different values. When $k = 0$, the equation becomes

$$\frac{x^2}{a^2} + \frac{y^2}{b^2} - \frac{z^2}{c^2} = 0$$

which can be rearranged to

$$\frac{x^2}{a^2} + \frac{y^2}{b^2} = \frac{z^2}{c^2}$$

This surface is a **double cone**. The point $(0, 0, 0)$ is the tip of the cone. For each non-zero value of z, the horizontal slice $z = k_0$ is an ellipse. As $|z|$ increases, these ellipses grow in size. The cone opens both upwards and downwards along the z-axis.

The cross-sections of a cone with planes are examples of conic sections. Horizontal slices are ellipses, and other slices at an angle can give parabolas or hyperbolas. Detailed properties of these curves appear in [Guide: Introduction to 2D conic sections]. Here, they are mainly used to describe the three-dimensional shape.

Changing the value of k in the same family of equations produces hyperboloids.

Hyperboloids

Consider again the family of surfaces

$$\frac{x^2}{a^2} + \frac{y^2}{b^2} - \frac{z^2}{c^2} = k$$

- When $k > 0$, the surface is a **hyperboloid of one sheet**. It is a connected shape (the surface is all in one piece) that looks a little like a curved column with a narrow "waist". Horizontal slices $z = z_0$ are ellipses. Vertical slices in some directions are hyperbolas.
- When $k < 0$, the surface is a **hyperboloid of two sheets**. It breaks into two separate pieces, with one above the origin and one below. Horizontal slices near each piece are ellipses. For values of z close to zero, there are no real points that satisfy the equation, so there is a gap between the two sheets.

The recognition pattern for this family is:

- all three variables x, y, z appear squared
- at least one squared term has a positive coefficient and at least one has a negative coefficient
- there are no cross terms such as xy or yz.

This mixed-sign pattern distinguishes cones and hyperboloids from spheres and ellipsoids, where the squared terms all have the same sign.

The graphs below show the quadratic family $\frac{x^2}{a^2} + \frac{y^2}{b^2} - \frac{z^2}{c^2} = k$. Changing a, b and c adjusts the stretching along each axis. Changing the value of k moves between a two-sheet hyperboloid ($k < 0$), a cone ($k = 0$), and a one-sheet hyperboloid ($k > 0$). A plane $z = h$ cuts the

surface, and the resulting cross-section satisfies $\frac{x^2}{a^2} + \frac{y^2}{b^2} = k + \frac{h^2}{c^2}$. The interactive figure demonstrates how changes in parameters affect both the three-dimensional surface and its slices.

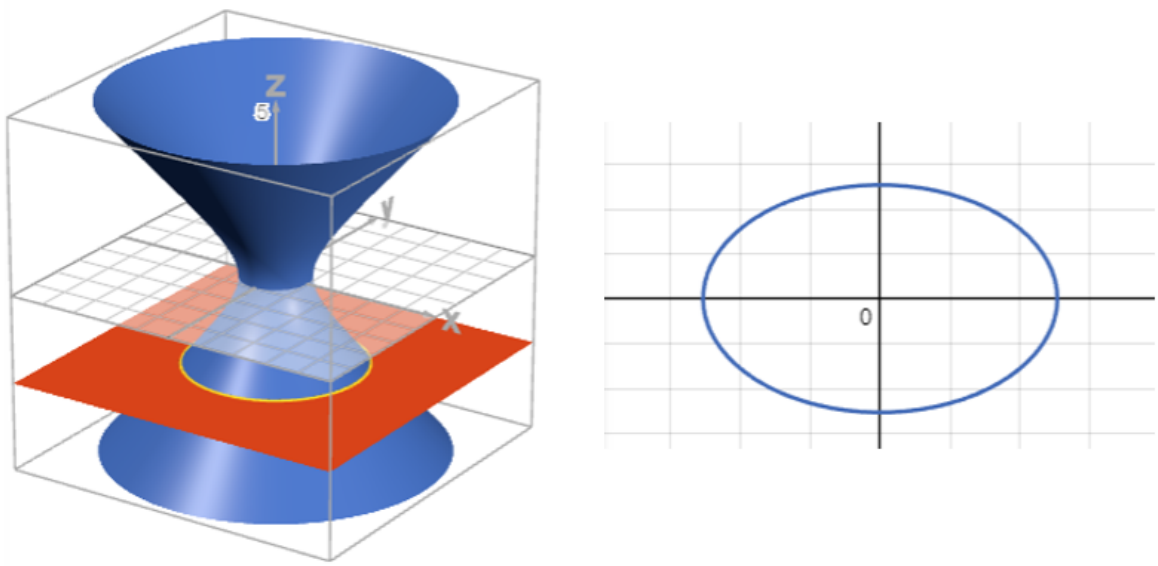

Figure 6: Family $\frac{x^2}{a^2} + \frac{y^2}{b^2} - \frac{z^2}{c^2} = k$ with slice $z = h$, showing elliptical sections when $k + \frac{h^2}{c^2} > 0$.

When two surfaces intersect

So far, most figures have shown a single surface at a time. In many problems, more than one surface is present, and the main question is where they meet. The set of common points is called the **intersection** of the surfaces.

For example, a plane cutting through a sphere produces a circle of intersection. A horizontal plane cutting through a paraboloid produces a closed curve (the curve joins up with itself to make a complete loop) or no intersection at all, depending on where the plane sits. In each case, the intersection is a curve in three dimensions.

Definition of the intersection of two surfaces

Suppose two surfaces are given by the equations

$$F(x, y, z) = 0 \quad \text{and} \quad G(x, y, z) = 0$$

The intersection of these surfaces is the set of points (x, y, z) that satisfy **both** equations

at the same time. In other words, the points in the intersection solve the system

$$F(x, y, z) = 0$$
$$G(x, y, z) = 0$$

Geometrically, this set is usually a curve in three dimensions, sometimes called a **space curve**.

Many of the slices seen earlier can be rephrased this way. A "horizontal slice" of a surface at height $z = k$ is exactly the intersection between the surface and the horizontal plane $z = k$. A "vertical trace" in the plane $y = a$ is the intersection between the surface and that vertical plane.

Example 2

Consider the paraboloid

$$z = x^2 + y^2$$

and the horizontal plane

$$z = k$$

where k is a constant.
The points that lie on both surfaces satisfy both equations, so

$$z = x^2 + y^2 \quad \text{and} \quad z = k$$

Setting these expressions for z equal to each other gives

$$x^2 + y^2 = k$$

- When $k > 0$, this equation describes a circle of radius $\sqrt{k}$ in the plane $z = k$. The intersection of the plane and the paraboloid is this circle.
- When $k = 0$, the intersection reduces to a single point at the origin, where the paraboloid touches the plane.
- When $k < 0$, there are no real solutions, so the plane lies away from the surface and the two do not meet.

Here the intersection curve is a circle, which is a conic section. Its properties as a two-dimensional curve are discussed in [Guide: Introduction to 2D conic sections]. In this overview, the main point is that the curve appears as the set of points where the two surfaces agree.

Other pairs of surfaces give different intersection curves, and two quadratic surfaces can meet in a range of shapes. In each case, the guiding principle is the same. The two surfaces intersect where their equations are satisfied simultaneously.

The graph below shows the intersection of the paraboloid $z = x^2 + y^2$ with the plane $z = k$. The slider for k shifts the plane up and down. The intersection curve satisfies $x^2 + y^2 = k$, which:

- is a circle for $k > 0$,
- is a single point for $k = 0$,
- has no real intersection for $k < 0$.

This highlights how the position of a slicing plane affects its intersection with a surface.

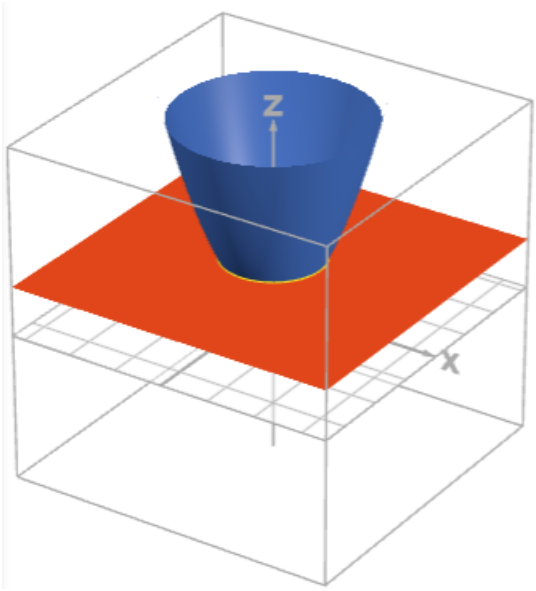

Figure 7: Intersection of $z = x^2 + y^2$ with the plane $z = k$, giving a circle of radius $\sqrt{k}$ when $k > 0$.

Decision tree

The decision tree below helps you classify equations in three variables into the surface types seen in this overview.

To use it, start at Question 1 and answer Yes or No to each statement about your equation. Follow the instructions according to your answers until you reach a suggested surface type and its typical general form.

Have a go at classifying the following surfaces based upon their equations:

1. $z = 2x^2 + y^2$
2. $x^2 + y^2 - z^2 = 1$
3. $3x - 2y + z = 5$

Question 1: Does the equation contain squared terms?

- **Yes**: Go to Question 2.
- **No**: Plane
  - General form: $z = ax + by + c$

Question 2: Is one variable missing entirely from the equation (for example, the equation uses only x and y, and z does not appear)?

- **Yes**: Cylinder
  - General form: $\frac{x^2}{a^2} + \frac{y^2}{b^2} = r^2$
- **No**: Go to Question 3.

Question 3: Can the equation be rewritten in the form $z = f(x, y)$ with z not squared?

- **Yes**: Go to Question 4.
- **No**: Go to Question 6.

Question 4: In the expression $f(x, y)$, do both x^2 and y^2 appear?

- **Yes**: Go to Question 5.
- **No**: Parabolic cylinder
  - General form: $z = ax^2 + b$

Question 5: After moving everything to one side, do the coefficients of x^2 and y^2 have the same sign?

- **Yes**: Elliptic paraboloid
  - General form: $z = ax^2 + by^2 + c$, $a, b > 0$
- **No**: Hyperbolic paraboloid (saddle)

- General form: $z = ax^2 - by^2 + c$, $a, b > 0$

Question 6: Do x^2, y^2, and z^2 all appear, with no cross-terms such as xy, xz, or yz?

- **Yes**: Go to Question 7.
- **No**: Other surface (The equation may describe a surface that is not covered by this short list. Traces and cross-sections can still give information about its local shape.)

Question 7: After moving everything to one side, do the coefficients of x^2, y^2, and z^2 all have the same sign?

- **Yes**: Sphere / Ellipsoid
  - General form: $\frac{x^2}{a^2} + \frac{y^2}{b^2} + \frac{z^2}{c^2} = r^2$.
- **No**: Go to Question 8.

Question 8: Is the constant term 0, so that the surface passes through the origin?

- **Yes**: Double cone
  - General form: $\frac{x^2}{a^2} + \frac{y^2}{b^2} = \frac{z^2}{c^2}$.
- **No**: Hyperboloid
  - One-sheet form: $\frac{x^2}{a^2} + \frac{y^2}{b^2} - \frac{z^2}{c^2} = k$.
  - Two-sheet form: $-\frac{x^2}{a^2} - \frac{y^2}{b^2} + \frac{z^2}{c^2} = k$.

Further reading

[For an overview of 2D curves, please see Overview: Recognizing 2D curves.]

[To learn more about what conic sections are, please see Guide: Introduction to 2D conic sections.]

Version history

v1.0: initial version created 12/25 by Donald Campbell as part of a University of St Andrews VIP project.

This work is licensed under CC BY-NC-SA 4.0.