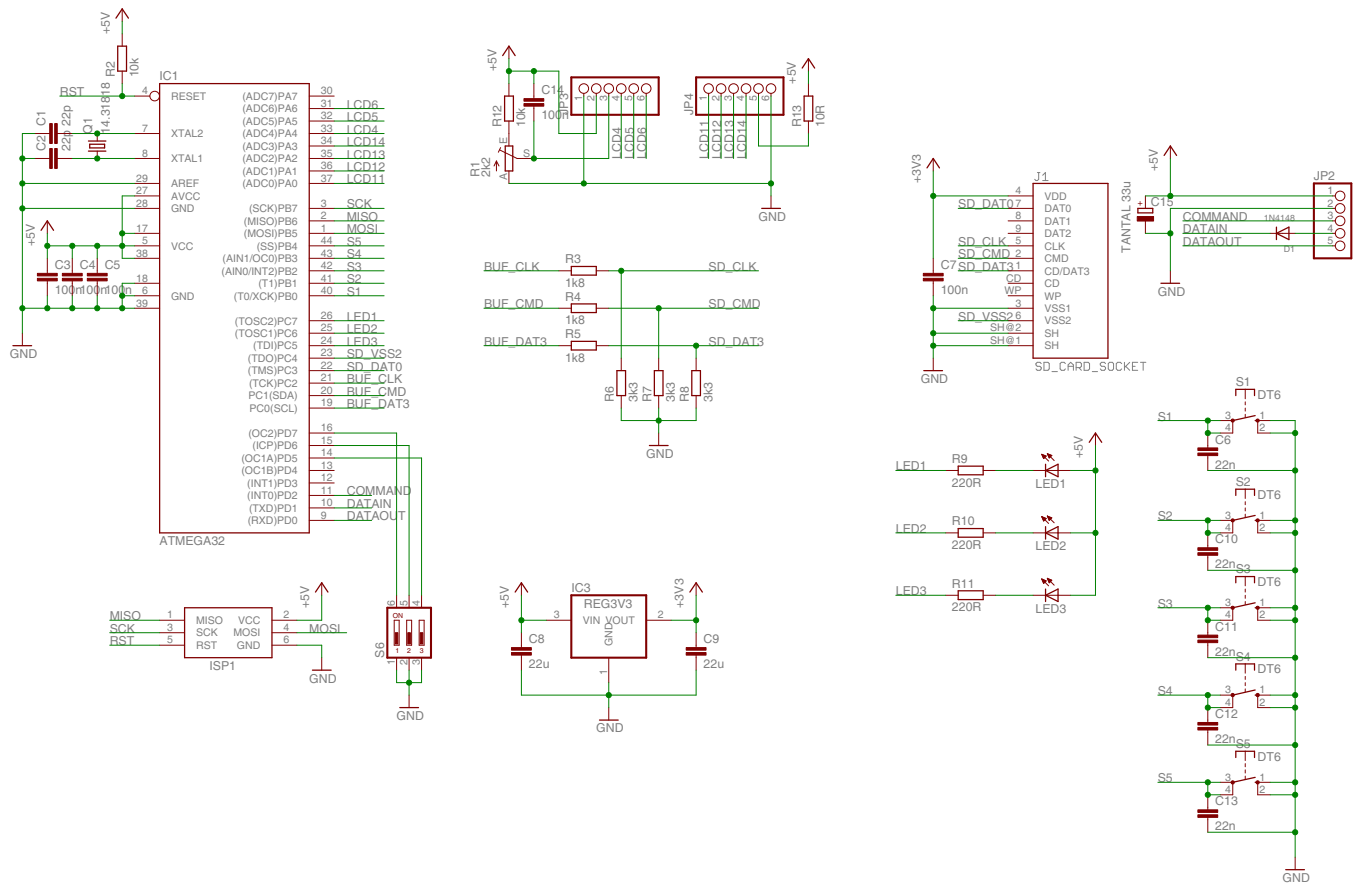

TITLE: a8-sio2sd	
Document Number:	REV:
Date: 2020-01-21 08:31	Sheet: 1/1

2020-01-21 10:30 f=0.65 C:\Users\tdididit\Documents\eagle\A8-SIO2SD\a8-sio2sd.sch (Sheet: 1/1)