ENGR-E 399/599 VLSI Design
Spring 2026
Midterm Exam

Due Date: Mar. 13, 2026 @ 11:59pm

Description: The Midterm Exam for ENGR-E 399/599 VLSI Design Covers Material from Lecture Modules 1-8, Chapters 2, 3, 4, 5, 6, 7, 11, 12, and 15 from R. Baker's CMOS Circuit Design, Layout, and Simulation, 4th Ed., as well as HW 1, HW 2, Lab 1, and Lab 2.

Open Book, Open Notes. You must work INDEPENDENTLY.

Deliverables: Create a single PDF document with your solutions.

Name: _____

Honor Code Pledge:
I certify that I abide by the academic code of honor, according to
https://studentcode.iu.edu

Signature: _____

Problem 1	_____	**/20**
Problem 2	_____	**/20**
Problem 3	_____	**/20**
Problem 4	_____	**/20**
Problem 5	_____	**/20 (+5 EC)**
Total	_____	**/100**

Problem 1 (20 points)
Sketch the color-coded stick diagram (finish the diagram below) for the circuit that implements the function F = $\overline{a + b \cdot c + d}$

Organize the layout so the transistors can be implemented on a continuous active strip (i.e., do not break the active).

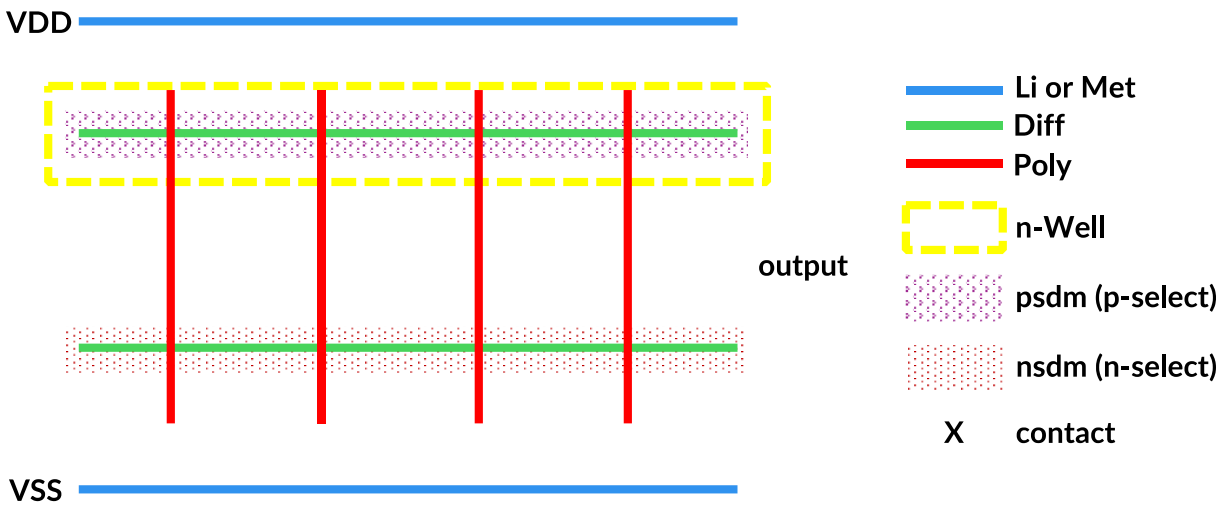

Solution:

Problem 2 (20 points)
Consider the following static logic gate. Derive the Boolean function for output Y in terms of the inputs A, B, C, D, E, and F.

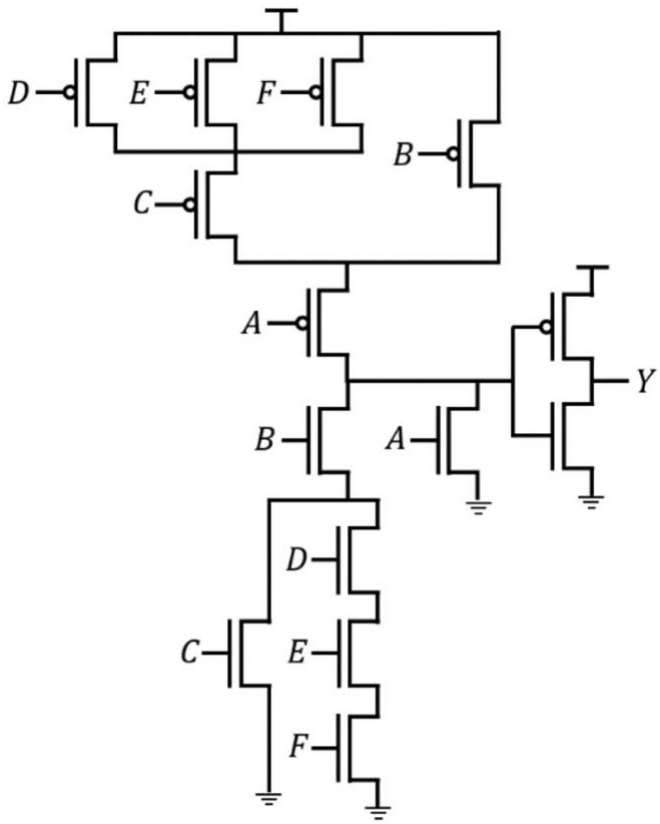

Solution:

Problem 3 (20 points)
Consider the following Boolean expression.

Output $= (A + BC')D$

Draw the circuit and indicate the relative width-to-length ratio of each transistor (i.e., a minimum-sized transistor has a relative ratio of 1). Size all NMOS and PMOS transistors such that the pull-up network and pull-down network have equivalent resistance to a minimum-sized MOSFET when a **single** pull-up or pull-down path is active.

Solution:

Problem 4 (20 points)
The diagram below shows a cross-section of a CMOS circuit with one N-type and one P-type transistor. Identify and label one example of each of the following layers in the diagram:

NWELL, N-active, field oxide, gate oxide, polysilicon, and metal1.

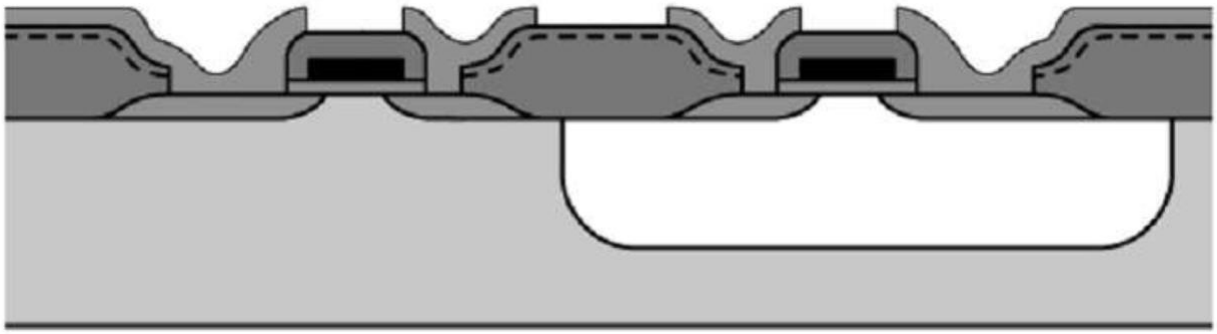

Problem 5 (20 points + 5 E.C.)

The following reference table provides the relative input capacitance, parasitic delay (p), and logical effort (g) of various gates with varying numbers of inputs.

Gate Type	Number of inputs														
	1			2			3			4			N		
Inverter	3	1	1												
NAND				4	2	4/3	5	3	5/3	6	4	6/3	N+2	N	(N+2)/3
NOR				5	2	5/3	7	3	7/3	9	4	9/3	2N+1	N	(2N+1)/3
TriState/mux		2	2		4	2		6	2		8	2		2N	2
XOR, XNOR					4	4,4		6	6,12,6		8	8,16,16,8			
(x,y,z) = Input Cap, p, g															

Consider the following circuit consisting of an inverter driving 3 NAND4s. One of the paths drives 7 NOR3 gates. Assume a load of 126C and an aggregate input capacitance on each input of each stage as 36, X, and Y. Using the logical effort approach (module 6), compute the following terms:

- parasitic delay (p) and path parasitic delay (P)
- logical effort (g) and path logical effort (G)
- branch effort (b)
- electrical effort (h) and path electrical effort (H)
- path effort (F)
- stage delay (d) and path delay (D)

Show work!

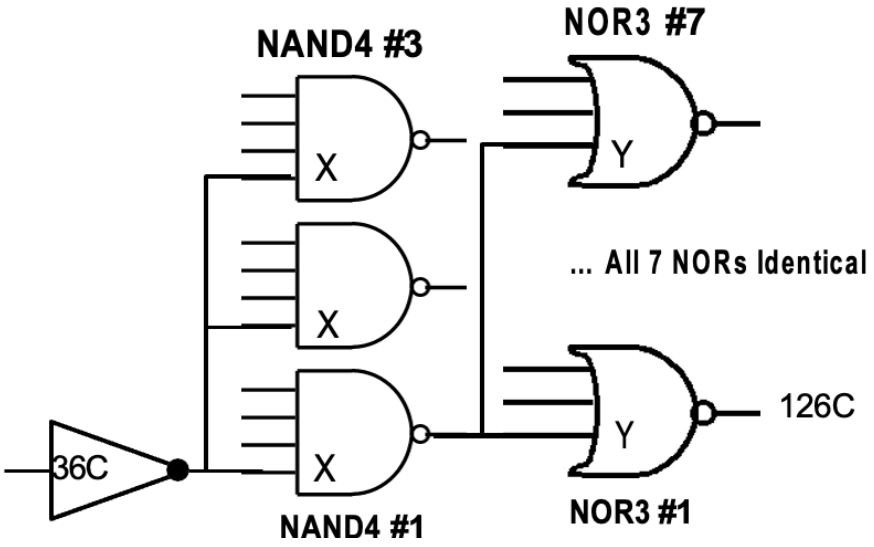

	Gate 1: Inverter	**Gate 2: 4-NAND**	**Gate 3: 3-NOR**	
p				P=
g				G=
b			1	B=
h				H=
F	-	-	-	
Input Capacitance	36	X=	Y=	
d				D=