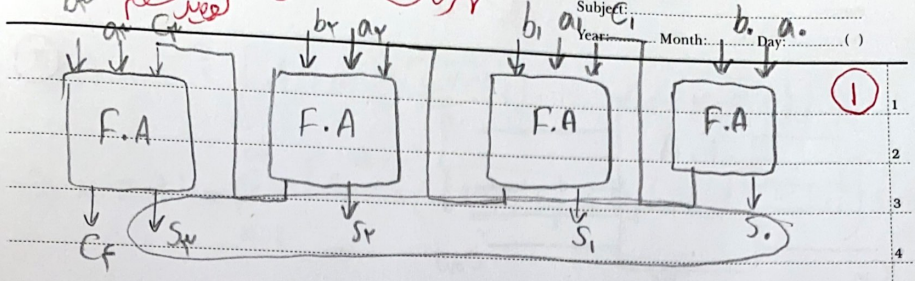

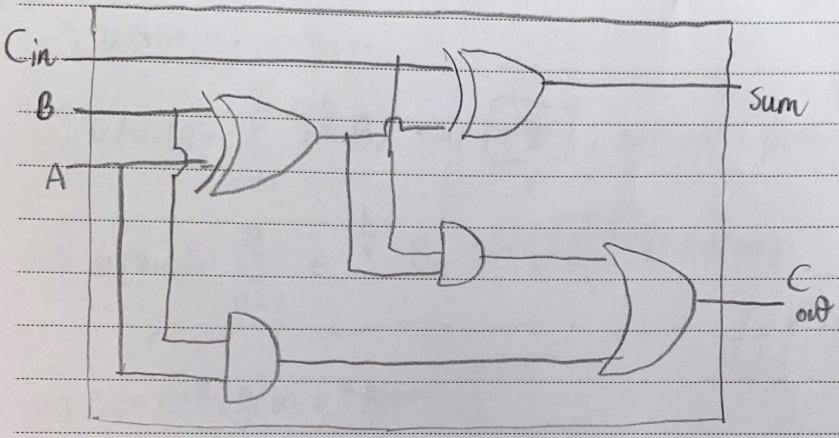

-10 for incorrect result bits width and did not use optimize way and did not define single result (we have 4 results at the same time!!)
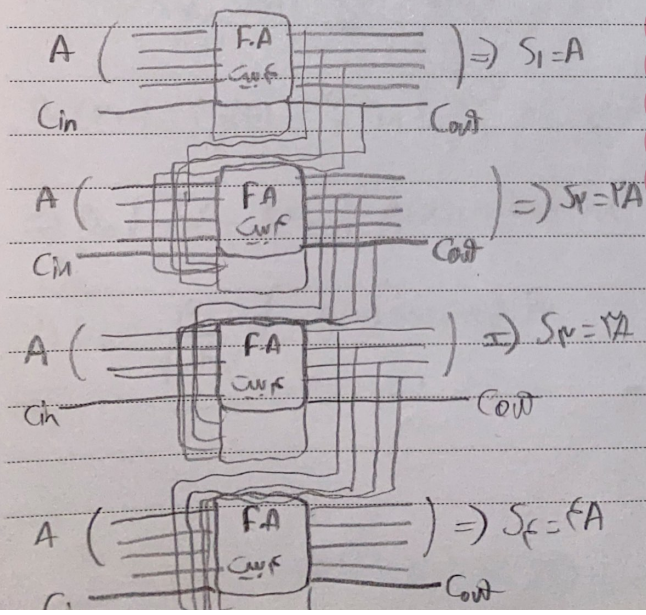
+10