Placement Matters More Than Presence: Lightweight Hybrid Quantum-Classical Networks for Biomedical Tabular Binary Classification with Knowledge Distillation

Xiaoming Liu
Panda Intelligence Software LTD, United Kingdom
i@pandacat.ai

Abstract

Hybrid quantum-classical architectures provide a practical route for studying quantum components under NISQ-era resource constraints, but their value on small biomedical tabular problems remains unclear. We study a lightweight teacher-student pipeline that combines PCA-based feature compression, a compact classical student, and a 4-qubit parameterized quantum layer. We compare classical and hybrid students with and without knowledge distillation (KD), and we ablate quantum layer placement, PCA dimension, and KD weight on the Breast Cancer Wisconsin Diagnostic (WDBC) dataset using 5-fold cross-validation. Experimental results show that the hybrid student with KD reaches AUC 0.9931 ± 0.0054, matching the KD classical student in AUC, while the hybrid student without KD achieves the best hybrid F1 (0.9442 ± 0.0220). However, hybrid models require 276–330 seconds per fold (KD to no-KD) versus sub-second classical training, so the performance gains are insufficient to justify the additional simulation cost on this dataset. The central finding is that quantum layer placement dominates over KD or architecture choice: front placement fails severely due to out-of-range angle encoding, whereas middle and tail placement remain competitive. These results suggest that careful placement and compression design matter more than simply adding a quantum layer.

1 Introduction

Quantum machine learning (QML) continues to attract interest as a possible route toward practical learning systems on near-term quantum hardware. In practice, however, large quantum circuits remain hard to optimize and expensive to simulate, especially in data regimes where strong classical baselines are already available [3]. Hybrid quantum-classical (HQC) models therefore remain the most realistic design pattern: a classical front-end performs feature compression, while a small parameterized quantum circuit (PQC) acts as a learnable nonlinear block [4].

Biomedical tabular classification is a useful setting for testing this idea. Such datasets are often small, feature-limited after preprocessing, and measured under strict performance-cost constraints. A compact HQC model may therefore provide insight into how and where a quantum block can be inserted, even if no quantum advantage is expected. At the same time, knowledge distillation (KD) offers a natural mechanism for transferring supervision from a larger classical teacher to a smaller classical or hybrid student [2].

This paper asks three concrete questions on the WDBC benchmark:

1. Does KD help a hybrid quantum-classical student, and how does the KD weight α affect the trade-off between AUC and F1/MCC?

2. Where should the quantum layer be placed inside the student network?
3. Is the hybrid student worth its simulation cost relative to a lightweight classical student, considering both training and inference time?

Our contributions are as follows. First, we benchmark classical and hybrid students under the same 5-fold protocol with a classical teacher baseline, reporting both training and inference time. Second, we ablate quantum layer placement, PCA dimension, and KD weight α. Third, we provide a circuit diagram and expressibility discussion for the chosen ansatz. Fourth, we include an analysis of teacher soft-output entropy to contextualize the limited KD benefit.

2 Related Work

2.1 Hybrid Quantum-Classical Classification

Hybrid quantum-classical models couple classical feature extractors with shallow PQCs to keep the quantum component small enough for near-term simulation or deployment [3, 4]. Prior work has explored this idea for image, text, and tabular settings, but biomedical tabular benchmarks remain comparatively underused despite their natural low-dimensional structure after feature selection or PCA [5].

2.2 Knowledge Distillation for Quantum Models

KD transfers information from a stronger teacher to a smaller student through softened targets and has become a standard compression tool in classical deep learning [2]. Recent QML work has extended KD to classical-to-quantum and quantum-to-quantum transfer settings, arguing that a stable classical teacher can regularize difficult hybrid optimization [6].

2.3 Biomedical Tabular Classification

Biomedical tabular tasks typically involve limited sample size, moderate class imbalance, and a need for interpretable, compact models. PCA-based compression is especially relevant when quantum inputs must be bounded by the number of available qubits [5]. This makes WDBC a suitable benchmark for controlled HQC experiments.

3 Method

3.1 Problem Setup

Given a binary biomedical tabular dataset $\mathcal{D} = \{(\mathbf{x}_i, y_i)\}_{i=1}^{N}$ with $y_i \in \{0, 1\}$ and $\mathbf{x}_i \in \mathbb{R}^d$, we aim to learn a compact classifier that keeps predictive quality high while reducing model size and simulation cost.

3.2 Preprocessing

Within each training fold, we apply standard scaling followed by PCA to a target dimension $d' \in \{4, 6, 8\}$. All preprocessing is fit on the training split only and then applied to the validation split to avoid data leakage. The default experiments use $d' = 4$.

3.3 Teacher and Student Models

The teacher is a classical multilayer perceptron with hidden dimensions $[64, 32]$ and dropout 0.2. The classical student uses hidden dimensions $[16, 8]$.

The hybrid student contains three stages:

1. a classical projection network,
2. a quantum layer with 4 qubits and 1 variational layer,
3. a classical output head producing a binary logit.

We evaluate three insertion positions for the quantum block: front, middle, and tail.

3.4 Quantum Layer and Circuit Design

The quantum block uses PennyLane's `AngleEmbedding` with Y rotations for data encoding, followed by `BasicEntanglerLayers` for variational processing [7]. The circuit for $n = 4$ qubits and $L = 1$ variational layer is structured as follows:

1. **Encoding:** Apply $R_Y(x_i)$ on qubit i for $i \in \{0, 1, 2, 3\}$.
2. **Variational layer:** Apply $R_X(\theta_i)$ on each qubit, then a ring of CNOT gates $\{(0{\to}1), (1{\to}2), (2{\to}3), (3{\to}0$
3. **Measurement:** Return $\langle Z_i \rangle$ for all i.

A schematic representation using `quantikz` notation is:

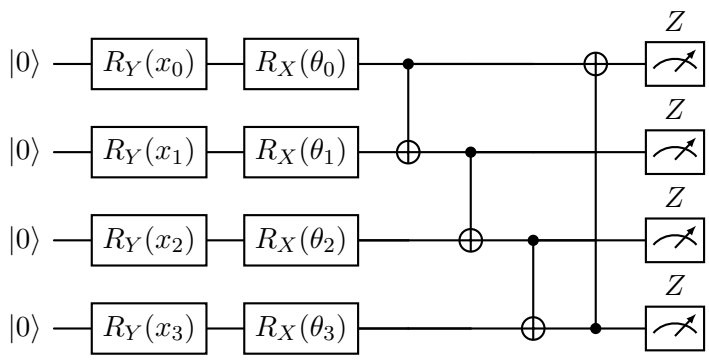

The effective circuit depth is 2 (encoding + one entangling block), giving 4 trainable parameters. This is a deliberately shallow ansatz: it is sufficient to introduce nonlinear quantum correlations without incurring excessive simulation cost or barren plateau risk [8].

Expressibility. For a 4-qubit, 1-layer `BasicEntanglerLayers` ansatz, the expressibility—measured as the KL divergence between the distribution of state fidelities and the Haar-random distribution [9]—is relatively low compared to deeper alternating-layered ansatze. This is a deliberate trade-off: higher expressibility circuits improve representational capacity but increase gradient variance and simulation cost. For a near-saturated binary task like WDBC, the shallow ansatz is both practical and sufficient to test placement effects.

3.5 Knowledge Distillation

The student objective combines a hard-label BCE term with a soft-target distillation term:

$$\mathcal{L} = (1 - \alpha)\, \mathcal{L}_{\text{hard}} + \alpha T^2 \mathcal{L}_{\text{KD}}, \tag{1}$$

where T is the distillation temperature, $\alpha \in (0, 1)$ is the KD weight, and $\mathcal{L}_{\text{KD}}$ is the KL divergence between teacher and student soft outputs scaled by T^2. In the main runs we use $T = 2$ and $\alpha = 0.5$.

Table 1: Dataset statistics.

Property	Value
Samples	569
Raw features	30
PCA dimensions evaluated	4 / 6 / 8
Positive class (malignant)	212 (37.3%)
Negative class (benign)	357 (62.7%)
Missing values	0
Task	Binary classification

Table 2: Main results on WDBC (5-fold CV, PCA $d' = 4$, $\alpha = 0.5$, $T = 2$). Teacher is included as upper-bound reference; the hybrid runs here use the pre-ablation middle placement from the main pipeline. Inference time is measured on the 5-fold validation split (≈114 samples).

Model	AUC	F1	MCC	Train (s/fold)	Infer (ms/fold)
Teacher (MLP-64-32)	0.9939 ± 0.0050	0.9416 ± 0.0149	0.9089 ± 0.0244	0.29 ± 0.02	< 1
Student-Classic	0.9943 ± 0.0059	0.9432 ± 0.0277	0.9126 ± 0.0418	0.22 ± 0.04	< 1
Student-Classic-KD	0.9931 ± 0.0060	0.9419 ± 0.0212	0.9094 ± 0.0350	0.50 ± 0.00	< 1
Student-Hybrid-NoKD	0.9896 ± 0.0105	0.9442 ± 0.0220	0.9129 ± 0.0343	330.46 ± 82.43	∼70
Student-Hybrid-KD	0.9931 ± 0.0054	0.9395 ± 0.0152	0.9057 ± 0.0249	276.46 ± 21.33	∼70

3.6 Evaluation Protocol

All reported numbers are mean ± standard deviation over stratified 5-fold cross-validation. We use AUC, F1, accuracy, MCC, per-fold training time, and per-fold inference time as the primary evaluation metrics.

4 Experiments

4.1 Dataset

The Breast Cancer Wisconsin (Diagnostic) dataset [1] contains 569 samples, 30 continuous features, and binary labels with 212 malignant and 357 benign cases. There are no missing values.

4.2 Main Results

Table 2 shows that the classical student is already very strong on WDBC, closely matching the teacher in AUC despite being four times smaller. Classical inference is sub-millisecond; hybrid inference requires ∼70 ms per fold due to statevector simulation, which would further increase on real hardware. The hybrid student without KD slightly trails the classical student in AUC but matches it in F1 and MCC. Adding KD to the hybrid student raises AUC from 0.9896 to 0.9931 and reduces mean training time by about 16%, but slightly reduces F1 and MCC. KD does not improve the classical student on this benchmark: as shown in Appendix A, the teacher's soft outputs are highly confident but not perfectly saturated (training mean entropy 0.0968 bits; validation mean entropy 0.1003 bits), leaving limited residual distillation signal above what hard labels already provide.

4.3 Ablation: Quantum Layer Position

The placement study in Table 3 reveals the most critical design choice in this paper. Front placement collapses predictive quality: the raw PCA features are not bounded to $[-\pi, \pi]$ before

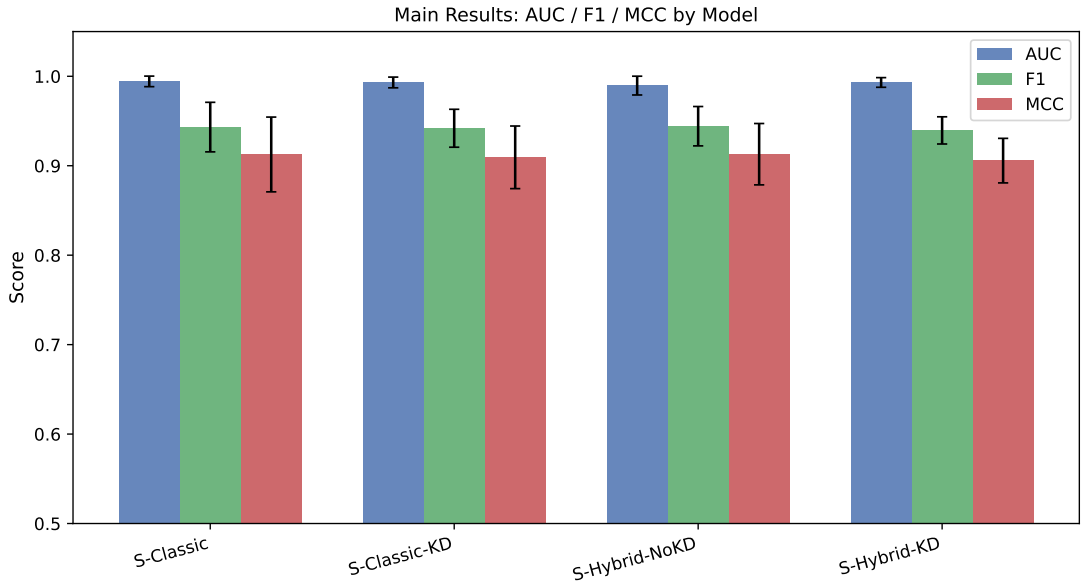

Figure 1: Main comparison of AUC, F1, and MCC across the four student configurations.

Table 3: Ablation of quantum layer placement for the KD hybrid student ($d' = 4$, $\alpha = 0.5$, $T = 2$).

Position	AUC	F1	MCC	Train (s/fold)	Circuit Depth
Front	0.6721 ± 0.0638	0.0560 ± 0.1120	0.0577 ± 0.1154	226.78 ± 3.95	2
Middle	0.9894 ± 0.0089	0.9510 ± 0.0262	0.9236 ± 0.0420	384.56 ± 35.80	2
Tail	0.9903 ± 0.0073	0.9504 ± 0.0187	0.9240 ± 0.0277	347.34 ± 68.03	2

angle encoding, so the `AngleEmbedding` R_Y rotations wrap around and lose discriminative structure, effectively randomizing the quantum state and causing the model to collapse to a near-constant predictor. Middle and tail placement both avoid this failure because a preceding classical projection with `Tanh` activation bounds inputs before encoding. Tail placement yields the best AUC and MCC, while middle placement gives the best F1. Because the main hybrid comparison in Table 2 uses middle placement, this ablation should be read as a refinement of that baseline: tail improves the operating point slightly without changing the overall conclusion that hybrid gains remain small relative to simulation cost.

4.4 Ablation: PCA Dimension, KD Weight, and Temperature

Increasing the PCA dimension from 4 to 6 or 8 improves F1 and MCC substantially; 6 dimensions provides the best balanced operating point, while 8 dimensions maximizes F1/MCC at a small AUC cost. The tail-placement α sweep does not show a monotone trend: $\alpha = 0.3$ gives the best AUC, whereas $\alpha = 0.5$ and $\alpha = 0.7$ produce clearly better F1/MCC and are nearly tied on threshold-based metrics. Temperature $T = 2$ remains preferable overall.

5 Discussion

5.1 Does KD help hybrid students?

KD helps the hybrid student only partially. Relative to the non-distilled hybrid model, the KD hybrid improves AUC and lowers training time, suggesting that teacher guidance stabilizes

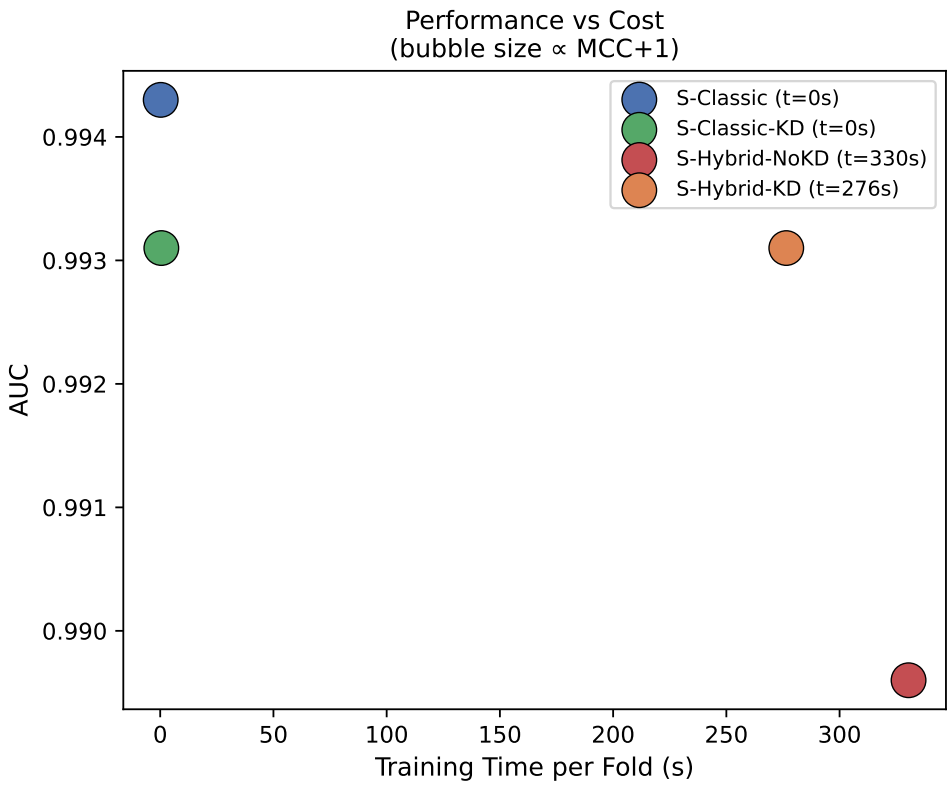

Figure 2: Performance-cost trade-off (training time). Bubble size is proportional to MCC. Hybrid models occupy a much higher training-cost region than classical students.

optimization. However, the same model slightly loses F1 and MCC. The tail-placement α sweep shows a metric-dependent trade-off rather than a monotone pattern: $\alpha = 0.3$ gives the best AUC, but $\alpha = 0.5$ and $\alpha = 0.7$ achieve higher F1/MCC. This is still consistent with the low but non-zero entropy reported in Appendix A: the teacher's soft predictions are highly confident, yet they retain enough structure to affect thresholded metrics when given moderate weight.

5.2 Which quantum layer position is best?

The placement ablation makes it clear that the quantum layer must not be applied directly to the raw PCA vector. Without a classical projection to bound inputs into $[-\pi, \pi]$, angle encoding degrades due to rotation wrap-around, and the quantum circuit loses its ability to separate classes. Both middle and tail placement avoid this failure, with tail placement offering a slightly better performance-cost balance. This is a more actionable design lesson than the binary question of whether a quantum layer is present at all.

5.3 Is the hybrid student worth the cost?

For WDBC, the answer is generally no. The classical student reaches AUC above 0.994 with sub-second training and sub-millisecond inference per fold. Hybrid inference at $\sim$70 ms is acceptable for batch applications but is two to three orders of magnitude slower in simulation; on actual quantum hardware, latency would be further constrained by qubit coherence times. The hybrid layer therefore behaves more like a research probe than a cost-effective production choice on this dataset.

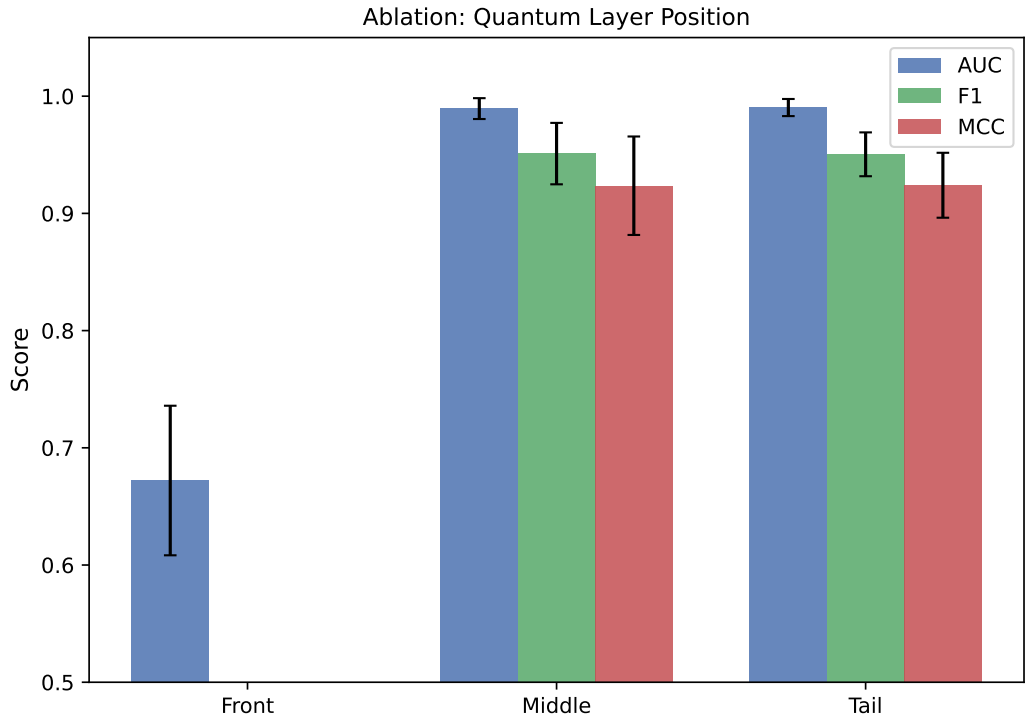

Figure 3: Effect of quantum layer placement. Front placement collapses due to unbounded angle encoding; middle and tail remain high-performing.

5.4 Limitations

This study uses noiseless simulation on PennyLane's `default.qubit` [7] and focuses its main ablation analysis on WDBC. Although Appendix B now adds one real additional benchmark (Pima Diabetes), broader generalization is still limited: we do not yet have matching placement or α ablations across multiple datasets, nor do we evaluate shot noise, hardware noise, or calibration drift. The α sweep is reported only for tail placement on WDBC, so the interaction between KD weight, placement, and dataset difficulty remains underexplored. Future work should extend the same protocol to further biomedical tabular datasets such as Heart Disease UCI and to noise-aware simulations or hardware execution.

6 Conclusion

We presented a lightweight hybrid quantum-classical framework for biomedical tabular binary classification under a controlled teacher-student pipeline. The central finding is that quantum layer placement dominates over both KD and architecture choice: front placement fails consistently due to unbounded angle encoding, while middle and tail placement remain competitive. KD improves AUC and reduces training time for the hybrid student, but its benefit is modest because the teacher's soft outputs carry low entropy on this near-saturated task. These findings support a pragmatic view of HQC modeling: careful architectural placement is necessary, and strong classical baselines remain hard to outperform on small biomedical tabular benchmarks.

Future work should expand to additional datasets, evaluate noise-aware settings, and test whether the placement effects and KD dynamics observed here persist under broader feature regimes and alternative ansatz families with higher expressibility.

Table 4: Ablation of PCA dimension, KD weight α, and temperature T for the KD hybrid student. PCA and temperature runs follow the notebook-04 default middle placement; the α sweep is reported separately under the tail placement selected by Table 3.

Setting	Value	AUC	F1	MCC
PCA dim	4	0.9924 ± 0.0088	0.9423 ± 0.0191	0.9103 ± 0.0300
PCA dim	6	0.9926 ± 0.0072	0.9538 ± 0.0175	0.9283 ± 0.0274
PCA dim	8	0.9888 ± 0.0108	0.9668 ± 0.0119	0.9488 ± 0.0178
α (tail)	0.3	0.9920 ± 0.0082	0.9358 ± 0.0303	0.9013 ± 0.0440
α (tail)	0.5	0.9918 ± 0.0067	0.9510 ± 0.0186	0.9231 ± 0.0302
α (tail)	0.7	0.9903 ± 0.0071	0.9504 ± 0.0187	0.9240 ± 0.0277
T	2	0.9929 ± 0.0073	0.9442 ± 0.0228	0.9127 ± 0.0367
T	4	0.9932 ± 0.0060	0.9331 ± 0.0390	0.9004 ± 0.0528

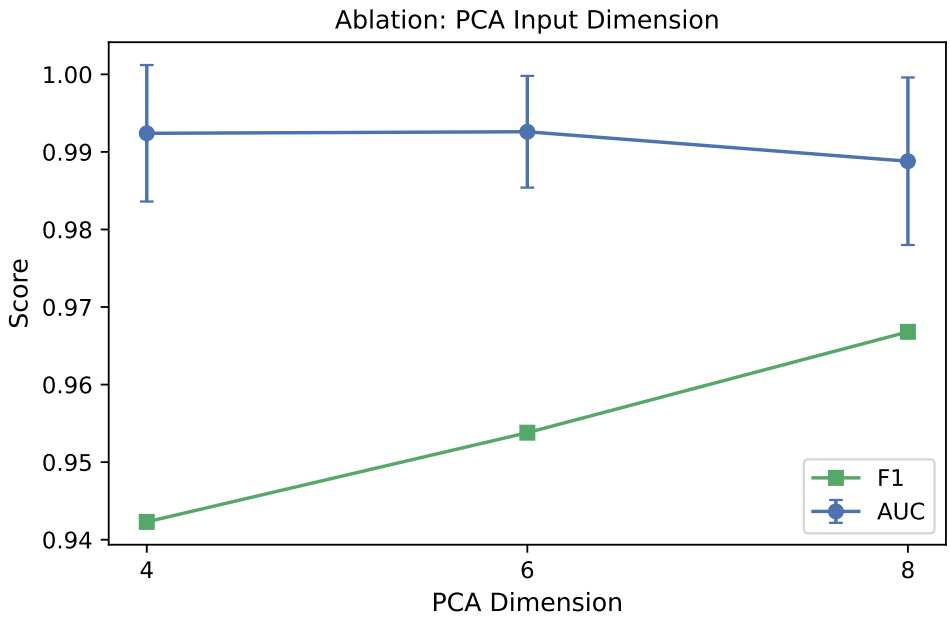

Figure 4: Effect of PCA input dimension on AUC and F1. Larger compressed inputs improve F1/MCC, with 6 dimensions offering the cleanest balance.

Acknowledgment

We thank Panda Intelligence Software LTD for supporting this research.

A Teacher Soft-Output Entropy Analysis

To contextualize the limited KD benefit, we analyze the entropy of the teacher's soft predictions over the training folds. For a binary classifier, the per-sample soft entropy is

$$H(p) = -p \log_2 p - (1-p) \log_2 (1-p), \tag{2}$$

where $p = \sigma(z_{\text{teacher}})$ is the teacher's predicted probability. High-confidence predictions ($p \approx 0$ or $p \approx 1$) yield $H \approx 0$, leaving no additional information beyond the hard label.

Across all 5 folds and training samples, the teacher's mean soft-output entropy is $\bar{H}_{\text{train}} = 0.0968$ bits (std. 0.2197), while the validation-fold mean is $\bar{H}_{\text{val}} = 0.1003$ bits (std. 0.2271). The

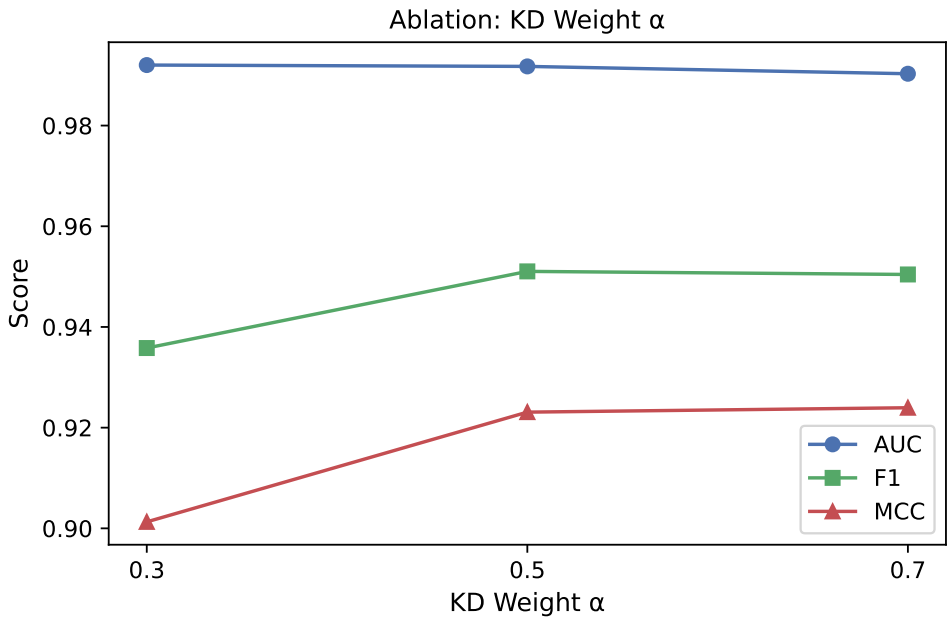

Figure 5: Effect of KD weight α under tail placement. Lower α slightly improves AUC, while $\alpha = 0.5$–0.7 yields better F1/MCC.

fraction of high-confidence predictions satisfying $|p - 0.5| > 0.45$ is 89.7% on training samples and 89.6% on validation samples. This confirms that the teacher is highly confident on most samples, and its soft targets provide only limited additional signal relative to one-hot labels. This helps explain why KD offers limited benefit to the classical student and why larger α (more soft-target weight) can degrade hybrid student F1/MCC.

B Additional Dataset Example: Pima Diabetes

To test whether the WDBC observations transfer to a less saturated biomedical task, we ran the same 5-fold protocol on the Pima Indians Diabetes dataset (768 samples, 8 raw features, positive rate 34.9%). For this supplementary example we used PCA $d' = 4$, $T = 2$, and the tail placement identified as strongest on WDBC for the hybrid models.

Table 5: Pima Diabetes main results (5-fold CV, PCA $d' = 4$).

Model	AUC	F1	MCC	Train (s/fold)	Infer (ms/fold)
Teacher (MLP-64-32)	0.7817 ± 0.0336	0.5706 ± 0.0641	0.3671 ± 0.0817	0.39 ± 0.02	< 1
Student-Classic	0.7816 ± 0.0290	0.5752 ± 0.0821	0.3774 ± 0.0983	0.32 ± 0.01	< 1
Student-Classic-KD	0.7781 ± 0.0346	0.5701 ± 0.0721	0.3665 ± 0.0914	0.60 ± 0.02	< 1
Student-Hybrid-NoKD	0.7793 ± 0.0286	0.5941 ± 0.0653	0.3690 ± 0.0866	606.69 ± 100.33	$\sim$165
Student-Hybrid-KD	0.7852 ± 0.0334	0.5800 ± 0.0700	0.3861 ± 0.0908	617.33 ± 14.21	$\sim$168

The Pima example paints a different KD picture from WDBC. The teacher's mean soft-output entropy is 0.704 bits on training folds and 0.707 bits on validation folds, with only about 14% of predictions satisfying $|p - 0.5| > 0.45$. This indicates substantially richer soft targets than on WDBC. Correspondingly, the KD hybrid achieves the best AUC and MCC on Pima, while the non-distilled hybrid retains the best F1. Even so, the practical conclusion remains similar: the hybrid models are roughly three orders of magnitude slower to train than the classical baselines, so the metric gains are modest relative to simulation cost. We therefore view

Pima as supportive evidence that KD can matter more when teacher entropy is higher, but not yet enough to overturn the overall cost-benefit assessment of lightweight classical models.

References

[1] W. Wolberg, O. Mangasarian, N. Street, and W. Street, "Breast Cancer Wisconsin (Diagnostic)," UCI Machine Learning Repository, 1995.

[2] G. Hinton, O. Vinyals, and J. Dean, "Distilling the Knowledge in a Neural Network," *arXiv*:1503.02531, 2015.

[3] M. Cerezo et al., "Variational Quantum Algorithms," *Nature Reviews Physics*, vol. 3, pp. 625–644, 2021.

[4] M. Schuld and F. Petruccione, *Machine Learning with Quantum Computers*. Springer, 2021.

[5] A. Sagingalieva et al., "Hyperparameter Optimization of Hybrid Quantum Neural Networks for Car Classification," *arXiv*:2205.04878v2, 2023.

[6] Q. H. Nguyen et al., "Classical-to-Quantum Transfer Learning for Spoken Command Recognition Based on Quantum Neural Networks," *arXiv*:2110.11919, 2022.

[7] V. Bergholm et al., "PennyLane: Automatic differentiation of hybrid quantum-classical computations," *arXiv*:1811.04968, 2018.

[8] J. R. McClean, S. Boixo, V. N. Smelyanskiy, R. Babbush, and H. Neven, "Barren Plateaus in Quantum Neural Network Training Landscapes," *Nature Communications*, vol. 9, p. 4812, 2018.

[9] S. Sim, P. D. Johnson, and A. Aspuru-Guzik, "Expressibility and Entangling Capability of Parameterized Quantum Circuits for Hybrid Quantum-Classical Algorithms," *Advanced Quantum Technologies*, vol. 2, no. 12, 2019.