A Pilot Ablation Study of Quantum-Layer Placement in Hybrid Networks for Biomedical Tabular Classification

Xiaoming Liu
Panda Intelligence Software LTD, United Kingdom
i@pandacat.ai

Abstract

Hybrid quantum-classical architectures are easy to overclaim on small biomedical benchmarks, where strong classical baselines and low statistical power can make minor differences look decisive. We revisit a lightweight teacher-student pipeline with PCA compression, a compact classical student, a 4-qubit parameterized quantum layer, and knowledge distillation (KD) for biomedical tabular classification. We rerun the main Breast Cancer Wisconsin Diagnostic (WDBC) comparison with 10-fold cross-validation, retain the original WDBC ablations, and add companion Pima Diabetes and Heart Statlog benchmarks plus pilot cross-dataset placement checks.

On WDBC, the tail-placement Hybrid-KD model matches but does not reliably outperform the classical student (AUC 0.9926 ± 0.0095 vs. 0.9947 ± 0.0081), and the hybrid cost remains in the hundreds of seconds per fold rather than sub-second. The placement result also needs a narrower interpretation than our original draft: front insertion is fragile in this implementation because direct PCA-to-qubit mapping induces heavy `Tanh` saturation and removes the learnable pre-quantum projection, whereas middle and tail remain viable. Pima and Heart show only modest, statistically uncertain hybrid gains under much higher simulation cost.

We therefore present the study as a pilot ablation of placement and input conditioning, not as definitive evidence that lightweight hybrid models outperform compact classical baselines.

1 Introduction

Quantum machine learning (QML) continues to attract interest as a possible route toward practical learning systems on near-term quantum hardware, following broader discussions of QML and the noisy intermediate-scale quantum (NISQ) regime [14, 13, 3, 4]. In practice, however, large quantum circuits remain hard to optimize and expensive to simulate, especially in data regimes where strong classical baselines are already available. Hybrid quantum-classical (HQC) models therefore remain the most realistic design pattern: a classical front-end performs feature compression, while a small parameterized quantum circuit (PQC) acts as a learnable nonlinear block [3, 15].

Biomedical tabular classification is a useful setting for testing this idea. Such datasets are often small, feature-limited after preprocessing, and measured under strict performance-cost constraints. A compact HQC model may therefore provide insight into how and where a quantum block can be inserted, even if no quantum advantage is expected. At the same time, knowledge distillation (KD) offers a natural mechanism for transferring supervision from a larger classical teacher to a smaller classical or hybrid student [2]. Recent biomedical and digital-health reviews also note that many QML claims in healthcare still come from simulator-based studies on small datasets with uneven classical baselines, making conservative benchmark design essential [29, 30].

This paper asks three concrete questions on the WDBC benchmark:

1. Does KD help a hybrid quantum-classical student, and how does the KD weight α affect the trade-off between AUC and F1/MCC?
2. Where should the quantum layer be placed inside the student network?
3. Is the hybrid student worth its simulation cost relative to a lightweight classical student, considering both training and inference time?

Our contributions are as follows. First, we revisit the main classical-versus-hybrid comparison on WDBC with a 10-fold robustness check and explicit uncertainty reporting rather than relying only on 5-fold mean±std summaries. Second, we retain the WDBC ablations on placement, PCA dimension, and KD weight α while extending the study with companion Pima Diabetes and Heart Statlog benchmarks. Third, we add pilot cross-dataset placement checks on Heart and Pima to test whether the front/middle/tail pattern is specific to WDBC. Fourth, we provide a circuit diagram, discuss the limited expressibility of the 4-qubit 1-layer ansatz, and explicitly frame the study as a pilot ablation rather than definitive evidence of hybrid superiority. Fifth, we connect the empirical results to recent literature on data encoding, trainability, generalization, and healthcare-oriented QML benchmarking so that the scope of our claims is explicit.

2 Related Work

2.1 Hybrid Quantum-Classical Classification

Hybrid quantum-classical models couple classical feature extractors with shallow PQCs to keep the quantum component small enough for near-term simulation or deployment [13, 15, 3]. A central design question is not only where to insert the quantum block, but also how to encode classical features into a limited quantum register. Circuit-centric classifiers, feature-Hilbert-space formulations, and quantum-enhanced kernel methods all emphasize that the inductive bias of the model is strongly shaped by the encoding map, not only by the variational circuit that follows it [16, 21, 22].

Recent work has therefore focused on repeated embeddings and more robust encodings as practical ways to enlarge function classes without immediately increasing qubit count [17, 20, 18]. At the same time, empirical studies suggest that raw expressibility is not a sufficient design objective: once trainability and hardware limits are considered, classification accuracy correlates only imperfectly with expressibility or entangling capability [23, 19, 25]. Shallow ansatze such as `BasicEntanglerLayers` therefore remain attractive precisely because they trade representational headroom for better optimization behavior, especially when deeper circuits risk barren plateaus [6, 26, 27].

2.2 Knowledge Distillation for Quantum Models

KD transfers information from a stronger teacher to a smaller student through softened targets and has become a standard compression tool in classical deep learning [2]. The distillation loss interpolates between hard-label cross-entropy and a KL-divergence soft-target term weighted by temperature T and mixing coefficient α. In QML, however, the KD literature is still sparse compared with classical model compression. Recent surveys and deployment-oriented studies suggest that teacher-generated soft targets can regularize difficult hybrid optimization and improve robustness of small quantum or hybrid students, especially when the quantum component is resource constrained [11, 12]. A largely open question is how the information content of teacher soft outputs—measured by their predictive entropy—affects the magnitude of KD benefit, particularly for small biomedical tasks where the teacher may already be near-saturated.

2.3 Biomedical Tabular Classification

Biomedical tabular tasks typically involve limited sample size, moderate class imbalance, and a need for interpretable, compact models. Classical baselines such as gradient-boosted trees and small MLPs are already strong on these benchmarks, raising the bar for any quantum enhancement. Recent reviews of biomedical and healthcare QML also report that many positive findings remain tied to small datasets, simulator-based evaluations, and heterogeneous baseline choices, so benchmark discipline is part of the scientific contribution rather than an implementation detail [29, 30]. PCA-based compression is especially relevant when quantum inputs must be bounded by the number of available qubits [5]. This makes datasets like WDBC, Pima Indians Diabetes, and Heart Statlog suitable benchmarks for controlled HQC experiments: they span a range of sample sizes, feature dimensions, and task difficulties, enabling cross-dataset analysis of how teacher confidence and KD interact with quantum-layer placement. More broadly, recent learning-theoretic work suggests that small-data QML claims should be interpreted through generalization behavior and uncertainty, not accuracy alone [24].

3 Method

3.1 Problem Setup

Given a binary biomedical tabular dataset $\mathcal{D} = \{(\mathbf{x}_i, y_i)\}_{i=1}^{N}$ with $y_i \in \{0, 1\}$ and $\mathbf{x}_i \in \mathbb{R}^d$, we aim to learn a compact classifier that keeps predictive quality high while reducing model size and simulation cost.

3.2 Preprocessing

Within each training fold, we apply standard scaling followed by PCA to a target dimension $d' \in \{4, 6, 8\}$. All preprocessing is fit on the training split only and then applied to the validation split to avoid data leakage. The default experiments use $d' = 4$. Although the codebase supports SMOTE-based resampling, all reported results here use no class rebalancing.

The choice of PCA is not only computational convenience. For circuit-centric and angle-encoding-based quantum classifiers, the feature interface to the quantum register is itself part of the model class, and richer decision functions usually require either a larger register or repeated data re-uploading [16, 17, 20]. We therefore treat PCA as a pragmatic classical-to-quantum interface that compresses tabular structure into a fixed 4-qubit budget, rather than as a claim that PCA is the uniquely best feature map.

3.3 Teacher and Student Models

The teacher is a classical multilayer perceptron with hidden dimensions $[64, 32]$ and dropout 0.2. The classical student uses hidden dimensions $[16, 8]$.

The hybrid student contains three stages:

1. a classical projection network,
2. a quantum layer with 4 qubits and 1 variational layer,
3. a classical output head producing a binary logit.

We evaluate three insertion positions for the quantum block: front, middle, and tail. In the front variant, the first four PCA components are squashed by `Tanh` and fed directly to the quantum layer, so this setting has no learnable pre-quantum projection. In the middle and tail variants, a classical projection network learns a bounded 4-dimensional representation before angle encoding.

3.4 Quantum Layer and Circuit Design

The quantum block uses PennyLane's `AngleEmbedding` with Y rotations for data encoding, followed by `BasicEntanglerLayers` for variational processing [7]. The circuit for $n = 4$ qubits and $L = 1$ variational layer is structured as follows:

1. **Encoding:** Apply $R_Y(x_i)$ on qubit i for $i \in \{0, 1, 2, 3\}$.
2. **Variational layer:** Apply $R_X(\theta_i)$ on each qubit, then a wrap-around ring of CNOT gates.
3. **Measurement:** Return $\langle Z_i \rangle$ for all i.

A schematic representation using `quantikz` notation is:

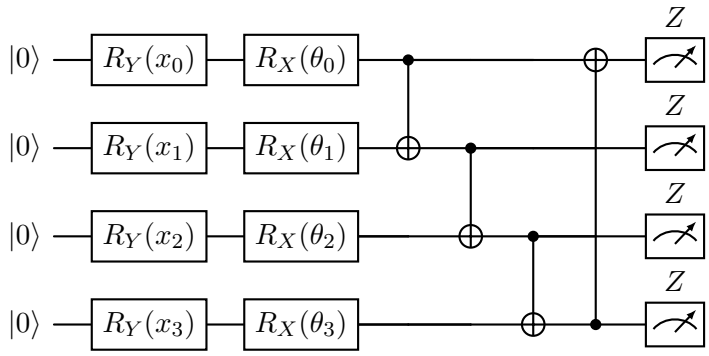

The effective circuit depth is 2 (encoding + one entangling block), giving 4 trainable parameters. This is a deliberately shallow ansatz: it is sufficient to introduce nonlinear quantum correlations without incurring excessive simulation cost or barren plateau risk [6]. Angle embedding is chosen because it is simple, differentiable, and easy to match to bounded PCA coordinates, but it also constrains the accessible frequency spectrum unless the encoding is repeated or supported by a richer pre-quantum projection [17, 18, 20].

Expressibility. For a 4-qubit, 1-layer `BasicEntanglerLayers` ansatz, the expressibility—measured as the KL divergence between the distribution of state fidelities and the Haar-random distribution [8]—is relatively low compared to deeper alternating-layered ansatze. This is a deliberate trade-off: higher expressibility can improve representational capacity, but empirical and theoretical work suggests that classification quality depends on how expressibility interacts with gradient scale, cost locality, and encoding choice rather than on expressibility alone [23, 19, 27]. We therefore favor a shallow circuit and local-output training objective, which aligns with trainability guidance from barren plateau analyses [6, 26]. For a near-saturated binary task like WDBC, the shallow ansatz is both practical and sufficient to test placement effects. As discussed later in Section 5.5, the quantum block contributes only four trainable parameters, so any performance differences cannot be attributed to parameter count alone.

3.5 Knowledge Distillation

The student objective combines a hard-label BCE term with a soft-target distillation term:

$$\mathcal{L} = (1 - \alpha)\, \mathcal{L}_{\text{hard}} + \alpha T^2 \mathcal{L}_{\text{KD}}, \tag{1}$$

where T is the distillation temperature, $\alpha \in (0, 1)$ is the KD weight, and $\mathcal{L}_{\text{KD}}$ is the KL divergence between teacher and student soft outputs scaled by T^2. In the main runs we use $T = 2$ and $\alpha = 0.5$.

Table 1: Dataset statistics.

Property	Value
Samples	569
Raw features	30
PCA dimensions evaluated	4 / 6 / 8
Positive class (malignant)	212 (37.3%)
Negative class (benign)	357 (62.7%)
Missing values	0
Task	Binary classification

Table 2: Main results on WDBC (10-fold CV, PCA $d' = 4$, $\alpha = 0.5$, $T = 2$). Hybrid students use the tail placement selected for the robustness rerun.

Model	AUC	F1	MCC
Teacher (MLP-64-32)	0.9937 ± 0.0090	0.9435 ± 0.0310	0.9127 ± 0.0488
Student-Classic	0.9947 ± 0.0081	0.9405 ± 0.0406	0.9100 ± 0.0598
Student-Classic-KD	0.9941 ± 0.0090	0.9408 ± 0.0372	0.9086 ± 0.0571
Student-Hybrid-NoKD (tail)	0.9859 ± 0.0171	0.9462 ± 0.0434	0.9161 ± 0.0682
Student-Hybrid-KD (tail)	0.9926 ± 0.0095	0.9437 ± 0.0381	0.9157 ± 0.0541

3.6 Optimization and Evaluation Protocol

Unless noted otherwise, all models are trained with Adam at learning rate 10^{-3} for 80 epochs. The default batch size is 32. For the hybrid follow-up runs on Pima and Heart we reduce the batch size to 8 to keep statevector simulation practical. We do not perform dataset-specific hyperparameter search; instead, we keep the same optimizer, temperature, and architecture settings across the reported comparisons. Thresholded metrics use a fixed decision threshold of 0.5.

The main WDBC classical-versus-hybrid comparison is re-run with stratified 10-fold cross-validation. The WDBC placement, PCA-dimension, and α ablations retain the original 5-fold protocol to stay comparable with the earlier pilot runs. The companion Pima and Heart benchmark tables use 5-fold cross-validation, while the follow-up placement checks on those two datasets are reported as 3-fold pilot experiments because each placement requires a full hybrid retraining loop. We report mean±std together with 95% confidence intervals and paired t-tests plus Cohen's d_z effect sizes for key AUC comparisons.

4 Experiments

4.1 Dataset

The Breast Cancer Wisconsin (Diagnostic) dataset [1] contains 569 samples, 30 continuous features, and binary labels with 212 malignant and 357 benign cases. There are no missing values.

4.2 Main Results

Table 2 shows that the classical student remains a very strong baseline on WDBC even under the 10-fold rerun. The tail-placement hybrid models match the classical student on thresholded metrics but do not reliably exceed it on AUC. KD recovers much of the tail model's AUC gap relative to the no-KD tail baseline, yet the gain remains modest. The teacher's soft outputs are still highly confident on WDBC (10-fold validation entropy $\bar{H}_{\text{val}} = 0.099$ bits), which helps

Table 3: Key paired AUC comparisons with uncertainty estimates. Positive ΔAUC means the second model in the comparison has higher AUC.

Comparison	ΔAUC	95% CI	p	d_z
WDBC: Classic vs. Hybrid-KD (tail)	-0.0021	$[-0.0046, 0.0004]$	0.092	-0.63
WDBC: Hybrid-NoKD (tail) vs. Hybrid-KD (tail)	$+0.0068$	$[-0.0006, 0.0141]$	0.067	0.70
Pima: Hybrid-NoKD vs. Hybrid-KD	$+0.0059$	$[-0.0148, 0.0267]$	0.472	0.40
Heart: Hybrid-NoKD vs. Hybrid-KD	$+0.0121$	$[-0.0170, 0.0411]$	0.312	0.58

Table 4: WDBC placement ablation for the KD hybrid student (5-fold CV, $d' = 4$, $\alpha = 0.5$, $T = 2$).

Position	AUC	F1	MCC	Train (s/fold)	Circuit Depth
Front	0.6721 ± 0.0638	0.0560 ± 0.1120	0.0577 ± 0.1154	226.78 ± 3.95	2
Middle	0.9894 ± 0.0089	0.9510 ± 0.0262	0.9236 ± 0.0420	384.56 ± 35.80	2
Tail	0.9903 ± 0.0073	0.9504 ± 0.0187	0.9240 ± 0.0277	347.34 ± 68.03	2

explain why KD effects remain limited.

As summarized in Table 3, neither the hybrid-KD tail model nor the classical-KD model yields a conventionally significant AUC gain over the classical student on WDBC. We therefore treat the WDBC results as descriptive pilot evidence rather than definitive pairwise superiority claims.

4.3 Ablation: Quantum Layer Position

The WDBC placement study in Table 4 still reveals a sharp front-versus-bounded gap, but the mechanism needs a narrower interpretation than in the original draft. In the front variant, the model takes only the first four PCA components, applies `Tanh`, and feeds them directly into angle embedding without a learnable pre-quantum projection. On the five WDBC training folds, about 36.5% of these direct front inputs satisfy $|\tanh(x)| > 0.95$ and about 21.3% exceed 0.99, indicating strong saturation before the quantum circuit. Under this implementation, front placement is therefore an input-conditioning failure mode rather than evidence that front insertion is fundamentally impossible.

Middle and tail placement define the viable operating region. On WDBC, tail gives the best AUC/MCC while middle gives the best F1. On the new Heart placement pilot, front collapses again (0.5313 ± 0.0468 AUC), whereas middle and tail remain competitive (0.8923 ± 0.0123 and 0.8757 ± 0.0229 AUC, respectively). The Pima pilot shows the same front-versus-bounded split: front remains weak (0.6019 ± 0.0113 AUC), whereas middle and tail recover to 0.7838 ± 0.0311 and 0.7875 ± 0.0298 AUC. The placement conclusion is thus more specific and more defensible: front insertion is fragile in this implementation, while middle and tail are the two competitive options and their ordering is dataset-dependent.

4.4 Ablation: PCA Dimension, KD Weight, and Temperature

Increasing the PCA dimension from 4 to 6 or 8 improves F1 and MCC substantially; 6 dimensions provides the best balanced operating point, while 8 dimensions maximizes F1/MCC at a small AUC cost. The tail-placement α sweep does not show a monotone trend: $\alpha = 0.3$ gives the best AUC, whereas $\alpha = 0.5$ and $\alpha = 0.7$ produce clearly better F1/MCC and are nearly tied on threshold-based metrics. Temperature $T = 2$ remains preferable overall.

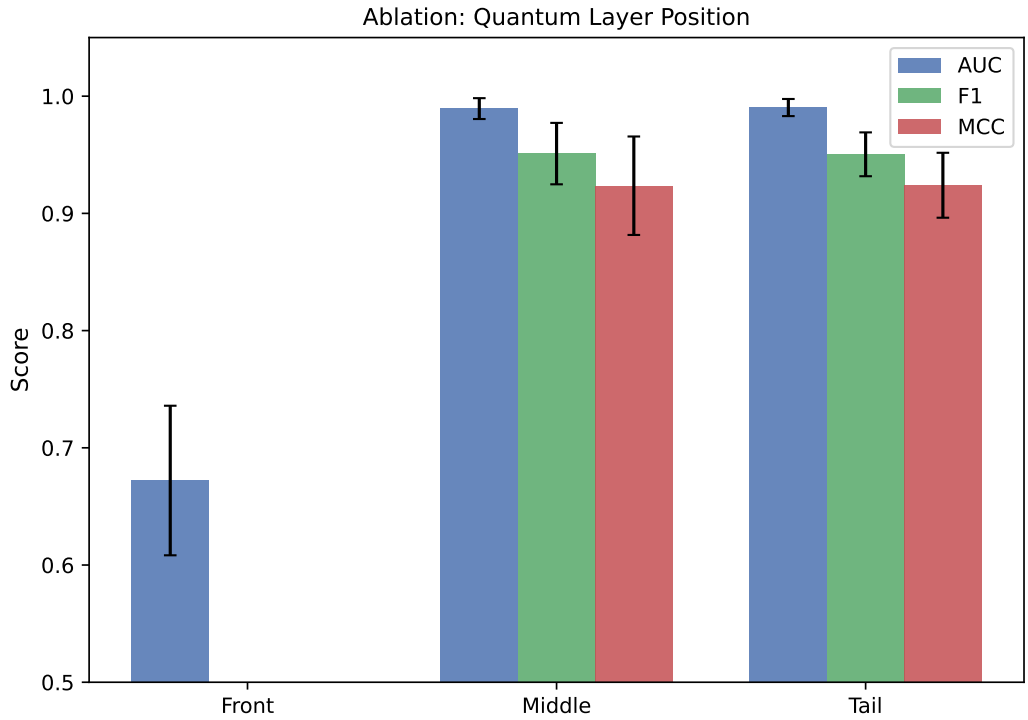

Figure 1: Quantum layer placement on WDBC. Front placement collapses; middle and tail remain competitive.

4.5 Cross-Dataset Summary

Table 6 brings the WDBC, Heart, and Pima results into one main-text view, while the appendices retain the full dataset-specific tables and fold-level details. The pattern is qualitative rather than monotone: WDBC has a near-saturated teacher and only a small AUC recovery with essentially flat MCC, Heart has moderate teacher uncertainty and the clearest hybrid gain, and Pima has richer teacher uncertainty but a weaker teacher and therefore a smaller gain than Heart. Across all three datasets, these hybrid gains remain modest relative to the simulation-cost gap and do not overturn the strong classical baseline.

5 Discussion

5.1 Does KD help hybrid students?

KD helps the hybrid student selectively rather than uniformly. As summarized in Tables 3 and 6, WDBC shows at most a suggestive AUC recovery under KD, whereas Heart and Pima show modest but still statistically uncertain gains. The pattern is non-monotonic in teacher entropy and too underpowered to justify a simple "KD always helps hybrid models" claim.

5.2 Which quantum layer position is best?

The placement ablation supports a narrower and more implementation-aware conclusion than the original title suggested. The front variant is fragile because it combines direct PCA-to-qubit mapping, heavy `Tanh` saturation, and the removal of a learnable pre-quantum projection. Middle and tail placement consistently avoid this failure mode, but no universal winner emerges between them: tail is slightly stronger on WDBC and in Pima AUC, whereas middle is stronger in the Heart pilot and in Pima's thresholded metrics. The actionable lesson is therefore not

Table 5: Ablation of PCA dimension, KD weight α, and temperature T for the KD hybrid student. PCA and temperature runs follow the notebook-04 default middle placement; the α sweep is reported separately under the tail placement selected by Table 4.

Setting	Value	AUC	F1	MCC
PCA dim	4	0.9924 ± 0.0088	0.9423 ± 0.0191	0.9103 ± 0.0300
PCA dim	6	0.9926 ± 0.0072	0.9538 ± 0.0175	0.9283 ± 0.0274
PCA dim	8	0.9888 ± 0.0108	0.9668 ± 0.0119	0.9488 ± 0.0178
α (tail)	0.3	0.9920 ± 0.0082	0.9358 ± 0.0303	0.9013 ± 0.0440
α (tail)	0.5	0.9918 ± 0.0067	0.9510 ± 0.0186	0.9231 ± 0.0302
α (tail)	0.7	0.9903 ± 0.0071	0.9504 ± 0.0187	0.9240 ± 0.0277
T	2	0.9929 ± 0.0073	0.9442 ± 0.0228	0.9127 ± 0.0367
T	4	0.9932 ± 0.0060	0.9331 ± 0.0390	0.9004 ± 0.0528

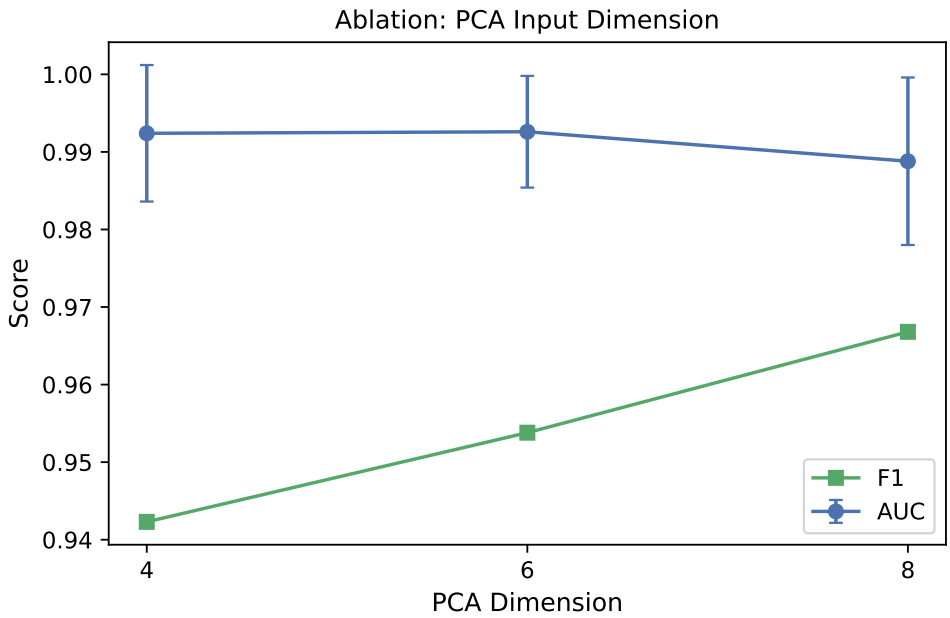

Figure 2: PCA dimension on WDBC. Larger compressed inputs improve F1/MCC, with 6 dimensions offering the best balance.

"placement always dominates," but rather "front placement requires much better input conditioning than this lightweight pipeline currently provides." In short, placement is not a silver bullet; conditioning and projection design are the real levers.

5.3 Is the hybrid student worth the cost?

For all three datasets considered here, the answer is still generally no. In the serial 5-fold runs, classical training remains sub-second per fold, whereas hybrid training requires hundreds of seconds per fold: roughly 276–330 s on WDBC, 214–221 s on Heart, and 607–617 s on Pima. Inference for the hybrid models is likewise two to three orders of magnitude slower than the classical students in statevector simulation. Even when the hybrid models recover some AUC or MCC, those gains are too small and too statistically fragile to offset the simulation-cost gap. The hybrid layer therefore behaves more like a research probe than a cost-effective production choice on these small tabular benchmarks.

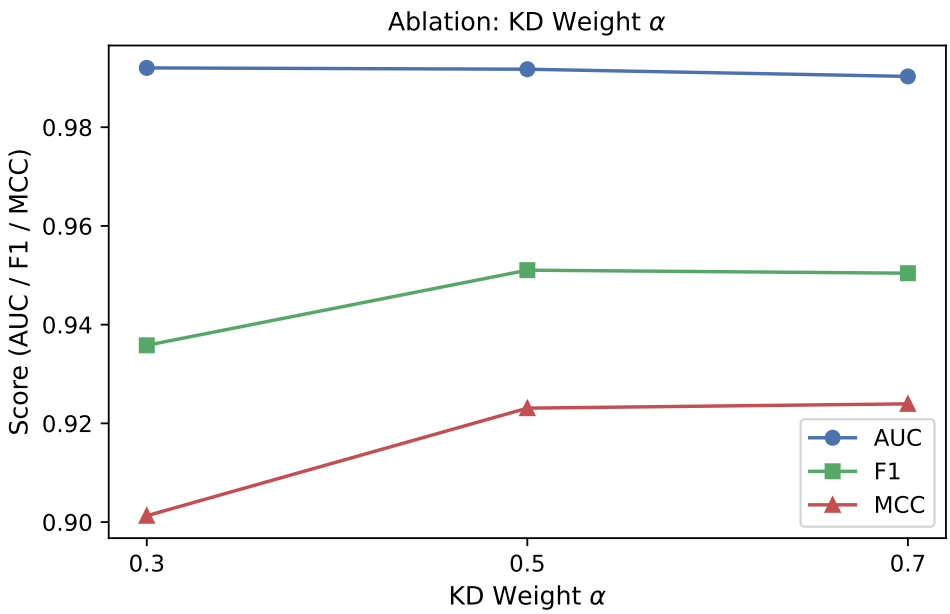

Figure 3: KD weight under tail placement. Lower α slightly improves AUC, while $\alpha = 0.5$–0.7 yields better F1/MCC.

Table 6: Cross-dataset summary of teacher entropy and KD benefit for the hybrid student. Δ values are computed as Hybrid-KD minus Hybrid-NoKD. Teacher entropy $\bar{H}$ is the mean per-sample soft-output entropy averaged over validation folds. Full per-dataset tables are reported in Appendices B and C.

Dataset	Teacher AUC	$\bar{H}_{\text{val}}$ (bits)	ΔAUC	ΔMCC
WDBC (N=569)	0.994	0.099	+0.007	−0.000
Heart (N=270)	0.889	0.470	+0.012	+0.022
Pima (N=768)	0.782	0.707	+0.006	+0.017

5.4 Benchmark Validity and External Plausibility

Recent QML theory and benchmarking work cautions that small accuracy deltas on classical data can be driven as much by encoding choice, sample size, and estimator noise as by genuinely useful quantum effects [24, 25, 28]. Our results fit that pattern. The 4-qubit block can match compact classical baselines on some folds, but the evidence does not isolate a uniquely quantum benefit: the best gains appear only after aggressive classical preprocessing, remain statistically fragile, and weaken once cost is treated as part of the comparison.

This conservative reading is especially important in healthcare-facing QML. Systematic reviews of the biomedical literature report that most studies remain simulator-based, use small or repeatedly reused benchmark datasets, and rarely establish stable superiority over carefully tuned classical baselines [29, 30]. The present study is therefore best understood as a controlled measurement of placement and conditioning effects inside a hybrid pipeline, not as a translational claim about clinical deployment.

5.5 Parameter Efficiency

Table 7 compares trainable parameter counts across all models for PCA $d' = 4$. The middle-placement hybrid student uses only 201 parameters (4 quantum, 197 classical), which is fewer than the classical student's 225, yet achieves comparable AUC and F1 on WDBC. The front-

Table 7: Trainable parameter counts by model ($d' = 4$, n_{qubits}=4, L=1). "Classical" and "Quantum" columns separate parameter types.

Model	Classical	Quantum	Total
Teacher (MLP-64-32)	2 433	—	2 433
Student-Classic [16,8]	225	—	225
Student-Hybrid (front)	49	4	53
Student-Hybrid (middle)	197	4	201
Student-Hybrid (tail)	301	4	305

placement variant is the most compact (53 parameters), but it also removes the learnable pre-quantum projection used by the middle and tail variants. The tail-placement hybrid (305 parameters) trades a modest parameter increase for the strongest WDBC AUC/MCC operating point. The parameter table is therefore useful for transparency, but it also shows why the placement ablation should not be interpreted as a pure "same-capacity, different-location" comparison.

5.6 Limitations

This work should be read as a pilot ablation study, not as definitive evidence for hybrid quantum advantage on biomedical tabular tasks. Even after the 10-fold WDBC rerun, several paired confidence intervals still overlap zero, and the companion Pima/Heart placement checks are only 3-fold pilot experiments. The datasets themselves remain small (WDBC 569, Heart 270, Pima 768), so broader generalization is still limited. On the modeling side, we evaluate only one 4-qubit, 1-layer `BasicEntanglerLayers` ansatz; we do not report a deeper-circuit comparison, learning-curve analysis, or an exhaustive hyperparameter search, nor do we test repeated data re-uploading or more robust encodings that could alter the front-placement story [17, 18, 20]. On the systems side, all experiments use noiseless simulation on PennyLane's `default.qubit` [7]; we do not evaluate finite-shot sampling, hardware noise, calibration drift, queueing latency, or real NISQ execution. That omission matters because recent work shows that kernel concentration and shot noise can erase nominal gains once hardware constraints are part of the evaluation [25, 28]. Future work should extend the same protocol to broader datasets, deeper circuits, and noise-aware simulation or hardware settings.

6 Conclusion

We presented a pilot ablation study of a lightweight hybrid quantum-classical pipeline for biomedical tabular classification. The updated WDBC 10-fold results do not support a definitive hybrid advantage over a compact classical baseline: the best hybrid variant remains statistically indistinguishable from the classical student on the primary AUC comparison. KD can recover some AUC for the hybrid model, especially away from the near-saturated WDBC regime, but the effect remains small and statistically uncertain across WDBC, Pima, and Heart.

The placement result also requires a narrower interpretation than the original title implied. In this implementation, front placement is fragile because it relies on a direct, heavily saturated PCA-to-qubit mapping with no learnable pre-quantum projection. Middle and tail placement define the viable region, but their ordering is dataset-dependent rather than universal. The broader practical conclusion is therefore conservative: strong classical baselines remain hard to beat on small biomedical tabular benchmarks, and the hybrid simulation cost stays far above the classical alternatives.

Future work should expand to additional datasets, evaluate noise-aware and shot-based settings, and test whether the same placement and KD dynamics persist under deeper or more

Table 8: Pima Diabetes main results (5-fold CV, PCA $d' = 4$). p-values from paired t-test vs. Student-Classic (best classical baseline). None are significant at α=0.05.

Model	AUC	F1	MCC	Train (s/fold)	p_{AUC}
Teacher (MLP-64-32)	0.7817 ± 0.0336	0.5706 ± 0.0641	0.3671 ± 0.0817	0.39 ± 0.02	—
Student-Classic	0.7816 ± 0.0290	0.5752 ± 0.0821	0.3774 ± 0.0983	0.32 ± 0.01	—
Student-Classic-KD	0.7781 ± 0.0346	0.5701 ± 0.0721	0.3665 ± 0.0914	0.60 ± 0.02	0.386
Student-Hybrid-NoKD	0.7793 ± 0.0286	0.5941 ± 0.0653	0.3690 ± 0.0866	606.69 ± 100.33	0.683
Student-Hybrid-KD	0.7852 ± 0.0334	0.5800 ± 0.0700	0.3861 ± 0.0908	617.33 ± 14.21	0.422

expressive ansatz families. More broadly, the v2 reading of our results is deliberately cautious: for small biomedical tabular problems, the most defensible contribution of a hybrid pipeline is currently methodological understanding of placement, conditioning, and supervision transfer, not a claim of practical quantum utility.

Acknowledgment

We thank Panda Intelligence Software LTD for supporting this research.

A Teacher Soft-Output Entropy Analysis

To contextualize the limited KD benefit, we analyze the entropy of the teacher's soft predictions over the training folds. For a binary classifier, the per-sample soft entropy is

$$H(p) = -p \log_2 p - (1-p) \log_2 (1-p), \tag{2}$$

where $p = \sigma(z_{\text{teacher}})$ is the teacher's predicted probability. High-confidence predictions ($p \approx 0$ or $p \approx 1$) yield $H \approx 0$, leaving no additional information beyond the hard label.

Across all 10 folds and training samples, the teacher's mean soft-output entropy is $\bar{H}_{\text{train}} = 0.0990$ bits (std. 0.2172), while the validation-fold mean is $\bar{H}_{\text{val}} = 0.0992$ bits (std. 0.2169). The fraction of high-confidence predictions satisfying $|p - 0.5| > 0.45$ is 89.7% on training samples and 89.3% on validation samples. This confirms that the teacher is highly confident on most samples, and its soft targets provide only limited additional signal relative to one-hot labels. This helps explain why KD offers limited benefit to the classical student and why larger α (more soft-target weight) can degrade hybrid student F1/MCC.

B Pima Diabetes Benchmark Details

Section 4.5 gives the main-text synthesis; this appendix keeps the full Pima table and supporting details for reproducibility. To test whether the WDBC observations transfer to a less saturated biomedical task, we ran the same 5-fold protocol on the Pima Indians Diabetes dataset [9] (768 samples, 8 raw features, positive rate 34.9%). We used PCA $d' = 4$, $T = 2$, and the tail placement selected from the WDBC placement study for the companion hybrid runs.

The Pima example paints a different KD picture from WDBC. The teacher's mean soft-output entropy is 0.704 bits on training folds and 0.707 bits on validation folds, with only about 14% of predictions satisfying $|p - 0.5| > 0.45$. This indicates substantially richer soft targets than on WDBC. Correspondingly, the KD hybrid achieves the best AUC and MCC on Pima, while the non-distilled hybrid retains the best F1. Even so, the practical conclusion remains similar: the hybrid models are roughly three orders of magnitude slower to train than the classical baselines, so the metric gains are modest relative to simulation cost. We therefore view

Table 9: Heart Statlog main results (5-fold CV, PCA $d' = 4$). p-values from paired t-test vs. Student-Classic. None are significant at α=0.05.

Model	AUC	F1	MCC	Train (s/fold)	p_{AUC}
Teacher (MLP-64-32)	0.8894 ± 0.0543	0.7932 ± 0.0774	0.6266 ± 0.1415	0.15 ± 0.02	—
Student-Classic	0.8878 ± 0.0552	0.8070 ± 0.0706	0.6643 ± 0.1208	0.12 ± 0.00	—
Student-Classic-KD	0.8892 ± 0.0470	0.8031 ± 0.0727	0.6547 ± 0.1205	0.22 ± 0.00	0.891
Student-Hybrid-NoKD	0.8736 ± 0.0704	0.7841 ± 0.0860	0.6116 ± 0.1595	221.48 ± 4.68	0.204
Student-Hybrid-KD	0.8857 ± 0.0533	0.7968 ± 0.0760	0.6340 ± 0.1392	214.08 ± 9.04	0.827

Pima as supportive evidence that KD can matter more when teacher entropy is higher, but not yet enough to overturn the overall cost-benefit assessment of lightweight classical models.

C Heart Statlog Benchmark Details

Section 4.5 gives the main-text synthesis; this appendix keeps the full Heart table and supporting details for reproducibility. To add a second companion biomedical benchmark, we ran the same 5-fold protocol on the Heart Statlog dataset [10] (270 samples, 13 raw features, positive rate 44.4%). As in the Pima benchmark, we used PCA $d' = 4$, $T = 2$, and the tail placement selected from the WDBC placement study for the companion hybrid runs.

Heart Statlog lands between WDBC and Pima in teacher uncertainty. The teacher's mean soft-output entropy is 0.471 bits on training folds and 0.470 bits on validation folds, with high-confidence fractions of 38.1% and 36.3%, respectively. Compared with the non-distilled hybrid, the KD hybrid improves AUC from 0.8736 to 0.8857, MCC from 0.6116 to 0.6340, and slightly reduces training time, but it still does not surpass the classical student on thresholded metrics. The Heart example therefore supports a narrower version of the Pima conclusion: richer teacher uncertainty can make KD more useful for the hybrid model, yet the overall cost-benefit picture still favors lightweight classical baselines.

References

[1] W. Wolberg, O. Mangasarian, N. Street, and W. Street, "Breast Cancer Wisconsin (Diagnostic)," UCI Machine Learning Repository, 1995. doi:10.24432/C5DW2B.

[2] G. Hinton, O. Vinyals, and J. Dean, "Distilling the Knowledge in a Neural Network," *preprint*, arXiv:1503.02531, 2015.

[3] M. Cerezo et al., "Variational Quantum Algorithms," *Nature Reviews Physics*, vol. 3, pp. 625–644, 2021.

[4] M. Schuld and F. Petruccione, *Machine Learning with Quantum Computers*. Springer, 2021.

[5] A. Sagingalieva et al., "Hyperparameter Optimization of Hybrid Quantum Neural Networks for Car Classification," *preprint*, arXiv:2205.04878v2, 2023.

[6] J. R. McClean, S. Boixo, V. N. Smelyanskiy, R. Babbush, and H. Neven, "Barren Plateaus in Quantum Neural Network Training Landscapes," *Nature Communications*, vol. 9, p. 4812, 2018.

[7] V. Bergholm et al., "PennyLane: Automatic differentiation of hybrid quantum-classical computations," *preprint*, arXiv:1811.04968, 2018.

[8] S. Sim, P. D. Johnson, and A. Aspuru-Guzik, "Expressibility and Entangling Capability of Parameterized Quantum Circuits for Hybrid Quantum-Classical Algorithms," *Advanced Quantum Technologies*, vol. 2, no. 12, 2019.

[9] J. W. Smith, J. E. Everhart, W. C. Dickson, W. C. Knowler, and R. S. Johannes, "Using the ADAP Learning Algorithm to Forecast the Onset of Diabetes Mellitus," *Proceedings of the Annual Symposium on Computer Applications in Medical Care*, pp. 261–265, 1988.

[10] R. Detrano, A. Janosi, W. Steinbrunn, M. Pfisterer, J.-J. Schmid, S. Sandhu, K. M. Guppy, S. Lee, and V. Froelicher, "International Application of a New Probability Algorithm for the Diagnosis of Coronary Artery Disease," *The American Journal of Cardiology*, vol. 64, no. 5, pp. 304–310, 1989.

[11] Z. Chen, Y. Gao, and X. Wang, "Quantum Knowledge Distillation: A Survey," *preprint*, arXiv:2404.17857, 2024.

[12] T. Hur, L. Wossnig, N.-H. Tseng, S. M. Mousavi, M. Dano, and S. Y. Nam, "Quantum Knowledge Distillation for Efficient Deployment of Quantum Neural Networks," *Expert Systems with Applications*, vol. 259, p. 125300, 2025.

[13] J. Preskill, "Quantum Computing in the NISQ Era and Beyond," *Quantum*, vol. 2, p. 79, 2018.

[14] J. Biamonte, P. Wittek, N. Pancotti, P. Rebentrost, N. Wiebe, and S. Lloyd, "Quantum Machine Learning," *Nature*, vol. 549, pp. 195–202, 2017.

[15] M. Benedetti, E. Lloyd, S. Sack, and M. Fiorentini, "Parameterized Quantum Circuits as Machine Learning Models," *Quantum Science and Technology*, vol. 4, no. 4, p. 043001, 2019.

[16] M. Schuld, A. Bocharov, K. M. Svore, and N. Wiebe, "Circuit-centric quantum classifiers," *Physical Review A*, vol. 101, p. 032308, 2020.

[17] A. Pérez-Salinas, A. Cervera-Lierta, E. Gil-Fuster, and J. I. Latorre, "Data re-uploading for a universal quantum classifier," *Quantum*, vol. 4, p. 226, 2020.

[18] R. LaRose and B. Coyle, "Robust data encodings for quantum classifiers," *Physical Review A*, vol. 102, p. 032420, 2020.

[19] A. Abbas, D. Sutter, C. Zoufal, A. Lucchi, A. Figalli, and S. Woerner, "The power of quantum neural networks," *Nature Computational Science*, vol. 1, pp. 403–409, 2021.

[20] M. Schuld, R. Sweke, and J. J. Meyer, "Effect of data encoding on the expressive power of variational quantum-machine-learning models," *Physical Review A*, vol. 103, p. 032430, 2021.

[21] M. Schuld and N. Killoran, "Quantum Machine Learning in Feature Hilbert Spaces," *Physical Review Letters*, vol. 122, p. 040504, 2019.

[22] V. Havlíček et al., "Supervised learning with quantum-enhanced feature spaces," *Nature*, vol. 567, pp. 209–212, 2019.

[23] T. Hubregtsen, J. Pichlmeier, P. Stecher, and K. Bertels, "Evaluation of parameterized quantum circuits: on the relation between classification accuracy, expressibility, and entangling capability," *Quantum Machine Intelligence*, vol. 3, p. 9, 2021.

[24] M. C. Caro, H.-Y. Huang, M. Cerezo, K. Sharma, A. Sornborger, L. Cincio, and P. J. Coles, "Generalization in quantum machine learning from few training data," *Nature Communications*, vol. 13, p. 4919, 2022.

[25] E. Peters et al., "Machine learning of high dimensional data on a noisy quantum processor," *npj Quantum Information*, vol. 7, p. 161, 2021.

[26] M. Cerezo, A. Sone, T. Volkoff, L. Cincio, and P. J. Coles, "Cost function dependent barren plateaus in shallow parametrized quantum circuits," *Nature Communications*, vol. 12, p. 1791, 2021.

[27] Z. Holmes, K. Sharma, M. Cerezo, and P. J. Coles, "Connecting Ansatz Expressibility to Gradient Magnitudes and Barren Plateaus," *PRX Quantum*, vol. 3, p. 010313, 2022.

[28] S. Thanasilp, S. Wang, M. Cerezo, and Z. Holmes, "Exponential concentration in quantum kernel methods," *Nature Communications*, vol. 15, p. 5200, 2024.

[29] D. Maheshwari, B. Garcia-Zapirain, and D. Sierra-Sosa, "Quantum Machine Learning Applications in the Biomedical Domain: A Systematic Review," *IEEE Access*, vol. 10, pp. 80463–80484, 2022.

[30] R. S. Gupta, C. E. Wood, T. Engstrom, J. D. Pole, and S. Shrapnel, "A systematic review of quantum machine learning for digital health," *npj Digital Medicine*, vol. 8, p. 237, 2025.