# Placement Matters More Than Presence: Lightweight Hybrid Quantum-Classical Networks for Biomedical Tabular Binary Classification with Knowledge Distillation

Xiaoming Liu
Panda Intelligence Software LTD, United Kingdom
i@pandacat.ai

**Abstract**

Hybrid quantum-classical architectures provide a practical route for studying quantum components under NISQ-era resource constraints, but their value on small biomedical tabular problems remains unclear. We study a lightweight teacher-student pipeline that combines PCA-based feature compression, a compact classical student, and a 4-qubit parameterized quantum layer. We compare classical and hybrid students with and without knowledge distillation (KD), and we ablate quantum layer placement, PCA dimension, and KD weight on the Breast Cancer Wisconsin Diagnostic (WDBC) dataset using 5-fold cross-validation, then validate the main KD intuition with supplementary full-example runs on Pima Diabetes and Heart Statlog. Experimental results show that the hybrid student with KD reaches AUC $0.9931 \pm 0.0054$, matching the KD classical student in AUC, while the hybrid student without KD achieves the best hybrid F1 ($0.9442 \pm 0.0220$). However, hybrid models require 276–330 seconds per fold (KD to no-KD) versus sub-second classical training, so the performance gains are insufficient to justify the additional simulation cost on this dataset. The central finding is that quantum layer placement dominates over KD or architecture choice: front placement fails severely due to out-of-range angle encoding, whereas middle and tail placement remain competitive. On the supplementary Pima and Heart runs, non-saturated teacher outputs coincide with modest hybrid AUC/MCC gains under KD, but the cost gap remains dominant. These results suggest that careful placement and compression design matter more than simply adding a quantum layer.

## 1 Introduction

Quantum machine learning (QML) continues to attract interest as a possible route toward practical learning systems on near-term quantum hardware. In practice, however, large quantum circuits remain hard to optimize and expensive to simulate, especially in data regimes where strong classical baselines are already available [3]. Hybrid quantum-classical (HQC) models therefore remain the most realistic design pattern: a classical front-end performs feature compression, while a small parameterized quantum circuit (PQC) acts as a learnable nonlinear block [4].

Biomedical tabular classification is a useful setting for testing this idea. Such datasets are often small, feature-limited after preprocessing, and measured under strict performance-cost constraints. A compact HQC model may therefore provide insight into how and where a quantum block can be inserted, even if no quantum advantage is expected. At the same time, knowledge distillation (KD) offers a natural mechanism for transferring supervision from a larger classical teacher to a smaller classical or hybrid student [2].

This paper asks three concrete questions on the WDBC benchmark:

1. Does KD help a hybrid quantum-classical student, and how does the KD weight $\alpha$ affect the trade-off between AUC and F1/MCC?
2. Where should the quantum layer be placed inside the student network?
3. Is the hybrid student worth its simulation cost relative to a lightweight classical student, considering both training and inference time?

Our contributions are as follows. First, we benchmark classical and hybrid students under the same 5-fold protocol with a classical teacher baseline, reporting both training and inference time. Second, we ablate quantum layer placement, PCA dimension, and KD weight $\alpha$ on WDBC. Third, we provide a circuit diagram and expressibility discussion for the chosen ansatz. Fourth, we include an analysis of teacher soft-output entropy to contextualize the limited KD benefit. Fifth, we add supplementary Pima Diabetes and Heart Statlog benchmarks showing how the KD picture changes when teacher entropy is no longer near-zero.

# 2 Related Work

## 2.1 Hybrid Quantum-Classical Classification

Hybrid quantum-classical models couple classical feature extractors with shallow PQCs to keep the quantum component small enough for near-term simulation or deployment [3, 4]. A central design question is where to insert the quantum block: before, within, or after the classical network. Prior work has explored this idea for image, text, and tabular settings, but biomedical tabular benchmarks remain comparatively underused despite their natural low-dimensional structure after feature selection or PCA [5]. Shallow ansatze such as `BasicEntanglerLayers` trade expressibility for trainability, reducing the risk of barren plateaus that plague deeper circuits [6]. Recent work on variational quantum classifiers has demonstrated competitive performance on small tabular benchmarks when paired with careful data encoding and feature compression [12, 13], and quantum kernel methods have shown promise on biomedical classification tasks where classical kernels struggle with structured feature interactions [14, 15].

## 2.2 Knowledge Distillation for Quantum Models

KD transfers information from a stronger teacher to a smaller student through softened targets and has become a standard compression tool in classical deep learning [2]. The distillation loss interpolates between hard-label cross-entropy and a KL-divergence soft-target term weighted by temperature $T$ and mixing coefficient $\alpha$. Recent QML work has extended KD to classical-to-quantum and quantum-to-quantum transfer settings, arguing that a stable classical teacher can regularize difficult hybrid optimization [7]. Subsequent studies have shown that KD can improve trainability of variational quantum circuits by smoothing the loss landscape [16] and that quantum-aware distillation strategies outperform naive transfer on noisy intermediate-scale devices [17]. A largely open question is how the information content of teacher soft outputs—measured by their predictive entropy—affects the magnitude of KD benefit, particularly for small biomedical tasks where the teacher may already be near-saturated.

## 2.3 Biomedical Tabular Classification

Biomedical tabular tasks typically involve limited sample size, moderate class imbalance, and a need for interpretable, compact models. Classical baselines such as gradient-boosted trees and small MLPs are already strong on these benchmarks, raising the bar for any quantum enhancement. PCA-based compression is especially relevant when quantum inputs must be bounded by the number of available qubits [5]. This makes datasets like WDBC, Pima Indians

Diabetes, and Heart Statlog suitable benchmarks for controlled HQC experiments: they span a range of sample sizes, feature dimensions, and task difficulties, enabling cross-dataset analysis of how teacher confidence and KD interact with quantum-layer placement.

# 3 Method

## 3.1 Problem Setup

Given a binary biomedical tabular dataset $\mathcal{D} = \{(\mathbf{x}_i, y_i)\}_{i=1}^{N}$ with $y_i \in \{0, 1\}$ and $\mathbf{x}_i \in \mathbb{R}^d$, we aim to learn a compact classifier that keeps predictive quality high while reducing model size and simulation cost.

## 3.2 Preprocessing

Within each training fold, we apply standard scaling followed by PCA to a target dimension $d' \in \{4, 6, 8\}$. All preprocessing is fit on the training split only and then applied to the validation split to avoid data leakage. The default experiments use $d' = 4$.

## 3.3 Teacher and Student Models

The teacher is a classical multilayer perceptron with hidden dimensions $[64, 32]$ and dropout 0.2. The classical student uses hidden dimensions $[16, 8]$.

The hybrid student contains three stages:

1. a classical projection network,
2. a quantum layer with 4 qubits and 1 variational layer,
3. a classical output head producing a binary logit.

We evaluate three insertion positions for the quantum block: front, middle, and tail.

## 3.4 Quantum Layer and Circuit Design

The quantum block uses PennyLane's `AngleEmbedding` with $Y$ rotations for data encoding, followed by `BasicEntanglerLayers` for variational processing [8]. The circuit for $n = 4$ qubits and $L = 1$ variational layer is structured as follows:

1. **Encoding:** Apply $R_Y(x_i)$ on qubit $i$ for $i \in \{0, 1, 2, 3\}$.
2. **Variational layer:** Apply $R_X(\theta_i)$ on each qubit, then a ring of CNOT gates $\{(0{\to}1), (1{\to}2), (2{\to}3), (3{\to}0$
3. **Measurement:** Return $\langle Z_i \rangle$ for all $i$.

A schematic representation using `quantikz` notation is:

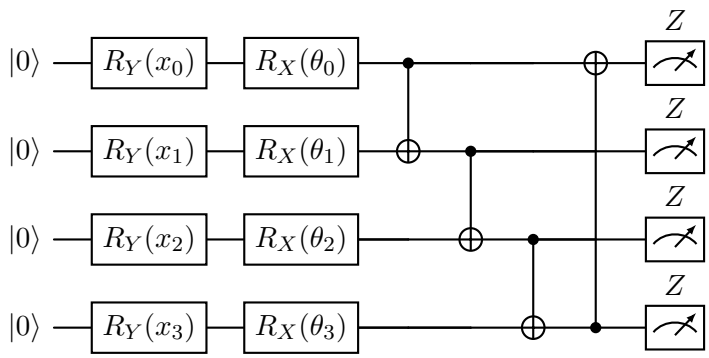

Table 1: Dataset statistics.

| Property | Value |
|---|---|
| Samples | 569 |
| Raw features | 30 |
| PCA dimensions evaluated | 4 / 6 / 8 |
| Positive class (malignant) | 212 (37.3%) |
| Negative class (benign) | 357 (62.7%) |
| Missing values | 0 |
| Task | Binary classification |

The effective circuit depth is 2 (encoding + one entangling block), giving 4 trainable parameters. This is a deliberately shallow ansatz: it is sufficient to introduce nonlinear quantum correlations without incurring excessive simulation cost or barren plateau risk [6].

**Expressibility.** For a 4-qubit, 1-layer `BasicEntanglerLayers` ansatz, the expressibility—measured as the KL divergence between the distribution of state fidelities and the Haar-random distribution [9]—is relatively low compared to deeper alternating-layered ansatze. This is a deliberate trade-off: higher expressibility circuits improve representational capacity but increase gradient variance and simulation cost. For a near-saturated binary task like WDBC, the shallow ansatz is both practical and sufficient to test placement effects.

### 3.5 Knowledge Distillation

The student objective combines a hard-label BCE term with a soft-target distillation term:

$$\mathcal{L} = (1-\alpha)\,\mathcal{L}_{\text{hard}} + \alpha T^2 \mathcal{L}_{\text{KD}}, \tag{1}$$

where $T$ is the distillation temperature, $\alpha \in (0,1)$ is the KD weight, and $\mathcal{L}_{\text{KD}}$ is the KL divergence between teacher and student soft outputs scaled by $T^2$. In the main runs we use $T = 2$ and $\alpha = 0.5$.

### 3.6 Evaluation Protocol

All reported numbers are mean ± standard deviation over stratified 5-fold cross-validation. We use AUC, F1, accuracy, MCC, per-fold training time, and per-fold inference time as the primary evaluation metrics.

## 4 Experiments

### 4.1 Dataset

The Breast Cancer Wisconsin (Diagnostic) dataset [1] contains 569 samples, 30 continuous features, and binary labels with 212 malignant and 357 benign cases. There are no missing values.

### 4.2 Main Results

Table 2 shows that the classical student is already very strong on WDBC, closely matching the teacher in AUC despite being four times smaller. Classical inference is sub-millisecond; hybrid inference requires ∼70 ms per fold due to statevector simulation, which would further increase on real hardware. The hybrid student without KD slightly trails the classical student in AUC but matches it in F1 and MCC. Adding KD to the hybrid student raises AUC from 0.9896

Table 2: Main results on WDBC (5-fold CV, PCA $d' = 4$, $\alpha = 0.5$, $T = 2$). Teacher is included as upper-bound reference; the hybrid runs here use the pre-ablation middle placement from the main pipeline. Inference time is measured on the 5-fold validation split (≈114 samples).

| Model | AUC | F1 | MCC | Train (s/fold) | Infer (ms/fold) |
|---|---|---|---|---|---|
| Teacher (MLP-64-32) | $0.9939 \pm 0.0050$ | $0.9416 \pm 0.0149$ | $0.9089 \pm 0.0244$ | $0.29 \pm 0.02$ | $< 1$ |
| Student-Classic | $0.9943 \pm 0.0059$ | $0.9432 \pm 0.0277$ | $0.9126 \pm 0.0418$ | $0.22 \pm 0.04$ | $< 1$ |
| Student-Classic-KD | $0.9931 \pm 0.0060$ | $0.9419 \pm 0.0212$ | $0.9094 \pm 0.0350$ | $0.50 \pm 0.00$ | $< 1$ |
| Student-Hybrid-NoKD | $0.9896 \pm 0.0105$ | $0.9442 \pm 0.0220$ | $0.9129 \pm 0.0343$ | $330.46 \pm 82.43$ | ∼70 |
| Student-Hybrid-KD | $0.9931 \pm 0.0054$ | $0.9395 \pm 0.0152$ | $0.9057 \pm 0.0249$ | $276.46 \pm 21.33$ | ∼70 |

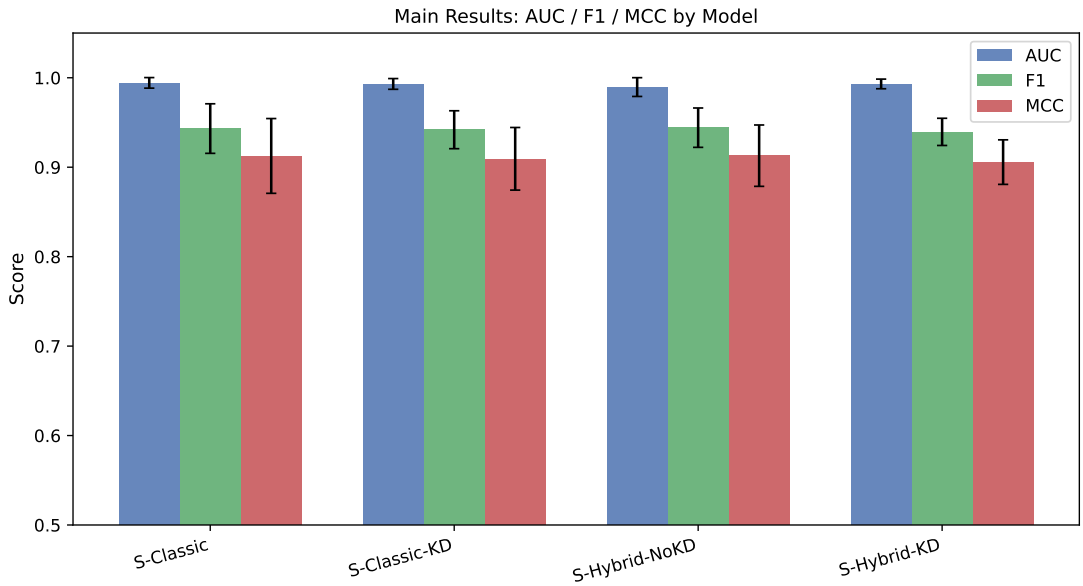


Figure 1: Main comparison of AUC, F1, and MCC across the four student configurations.

to 0.9931 and reduces mean training time by about 16%, but slightly reduces F1 and MCC. KD does not improve the classical student on this benchmark: as shown in Appendix A, the teacher's soft outputs are highly confident but not perfectly saturated (training mean entropy 0.0968 bits; validation mean entropy 0.1003 bits), leaving limited residual distillation signal above what hard labels already provide.

**Statistical significance.** With only 5 folds, paired $t$-tests between each student and the best classical baseline (Student-Classic) yield $p > 0.05$ for all metrics on both Pima and Heart (see Tables 8 and 9). No model reliably outperforms another at conventional significance levels, which is consistent with the small effect sizes and low power of a 5-fold design.

### 4.3 Ablation: Quantum Layer Position

The placement study in Table 3 reveals the most critical design choice in this paper. Front placement collapses predictive quality: the raw PCA features are not bounded to $[-\pi, \pi]$ before angle encoding, so the `AngleEmbedding` $R_Y$ rotations wrap around and lose discriminative structure, effectively randomizing the quantum state and causing the model to collapse to a near-constant predictor. Middle and tail placement both avoid this failure because a preceding classical projection with `Tanh` activation bounds inputs before encoding. Tail placement yields the best AUC and MCC, while middle placement gives the best F1. Because the main hybrid

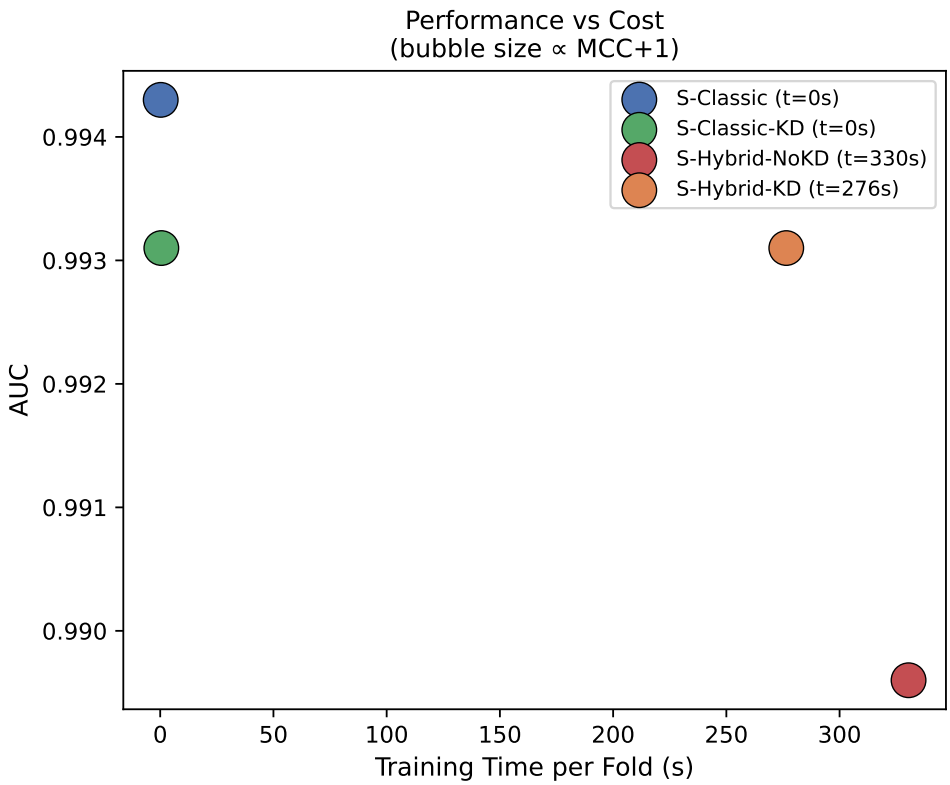


Figure 2: Performance-cost trade-off (training time). Bubble size is proportional to MCC. Hybrid models occupy a much higher training-cost region than classical students.

Table 3: Ablation of quantum layer placement for the KD hybrid student ($d' = 4$, $\alpha = 0.5$, $T = 2$).

| Position | AUC | F1 | MCC | Train (s/fold) | Circuit Depth |
|---|---|---|---|---|---|
| Front | $0.6721 \pm 0.0638$ | $0.0560 \pm 0.1120$ | $0.0577 \pm 0.1154$ | $226.78 \pm 3.95$ | 2 |
| Middle | $0.9894 \pm 0.0089$ | $0.9510 \pm 0.0262$ | $0.9236 \pm 0.0420$ | $384.56 \pm 35.80$ | 2 |
| Tail | $0.9903 \pm 0.0073$ | $0.9504 \pm 0.0187$ | $0.9240 \pm 0.0277$ | $347.34 \pm 68.03$ | 2 |

comparison in Table 2 uses middle placement, this ablation should be read as a refinement of that baseline: tail improves the operating point slightly without changing the overall conclusion that hybrid gains remain small relative to simulation cost.

### 4.4 Ablation: PCA Dimension, KD Weight, and Temperature

Increasing the PCA dimension from 4 to 6 or 8 improves F1 and MCC substantially; 6 dimensions provides the best balanced operating point, while 8 dimensions maximizes F1/MCC at a small AUC cost. The tail-placement $\alpha$ sweep does not show a monotone trend: $\alpha = 0.3$ gives the best AUC, whereas $\alpha = 0.5$ and $\alpha = 0.7$ produce clearly better F1/MCC and are nearly tied on threshold-based metrics. Temperature $T = 2$ remains preferable overall.

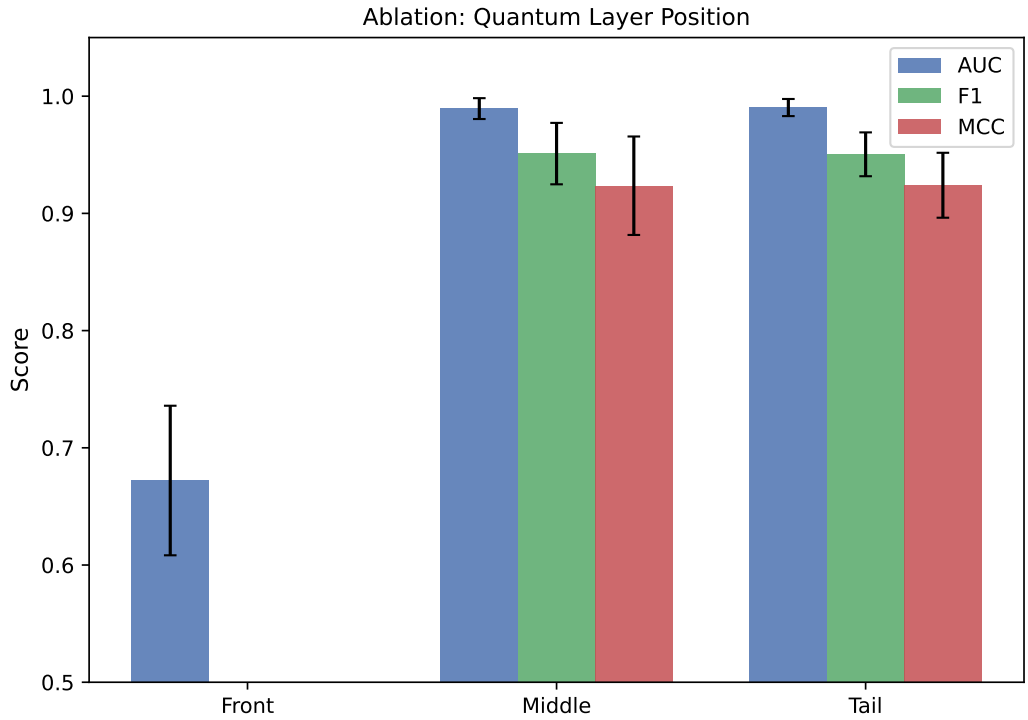


Figure 3: Effect of quantum layer placement. Front placement collapses due to unbounded angle encoding; middle and tail remain high-performing.

# 5 Discussion

## 5.1 Does KD help hybrid students?

KD helps the hybrid student only partially. Relative to the non-distilled hybrid model, the KD hybrid improves AUC and lowers training time, suggesting that teacher guidance stabilizes optimization. However, the same model slightly loses F1 and MCC. The tail-placement $\alpha$ sweep shows a metric-dependent trade-off rather than a monotone pattern: $\alpha = 0.3$ gives the best AUC, but $\alpha = 0.5$ and $\alpha = 0.7$ achieve higher F1/MCC. This is still consistent with the low but non-zero entropy reported in Appendix A: the teacher's soft predictions are highly confident, yet they retain enough structure to affect thresholded metrics when given moderate weight. The supplementary Pima and Heart runs are consistent with the same story: once teacher entropy is no longer near-zero, KD can modestly improve hybrid AUC/MCC, but the size and direction of the gain remain dataset-dependent rather than monotonic.

Table 5 summarizes the relationship between teacher entropy and KD benefit across all three datasets. The pattern is non-monotonic: the largest hybrid KD gains ($\Delta$AUC $= +0.012$, $\Delta$MCC $= +0.022$) occur on Heart Statlog, where the teacher has moderate uncertainty (0.471 bits) and moderate reliability (AUC 0.889). On WDBC, the near-saturated teacher provides little additional signal, and KD slightly hurts MCC. On Pima, despite the highest teacher entropy, the KD benefit is smaller than on Heart, likely because the weaker teacher (AUC 0.782) provides less reliable soft targets. This suggests that KD benefit for hybrid students depends on both the information content and the predictive quality of teacher soft outputs: a teacher that is too confident offers no extra signal, while a teacher that is too uncertain offers noisy signal.

Table 4: Ablation of PCA dimension, KD weight $\alpha$, and temperature $T$ for the KD hybrid student. PCA and temperature runs follow the notebook-04 default middle placement; the $\alpha$ sweep is reported separately under the tail placement selected by Table 3.

| Setting | Value | AUC | F1 | MCC |
|---|---|---|---|---|
| PCA dim | 4 | $0.9924 \pm 0.0088$ | $0.9423 \pm 0.0191$ | $0.9103 \pm 0.0300$ |
| PCA dim | 6 | $0.9926 \pm 0.0072$ | $0.9538 \pm 0.0175$ | $0.9283 \pm 0.0274$ |
| PCA dim | 8 | $0.9888 \pm 0.0108$ | $0.9668 \pm 0.0119$ | $0.9488 \pm 0.0178$ |
| $\alpha$ (tail) | 0.3 | $0.9920 \pm 0.0082$ | $0.9358 \pm 0.0303$ | $0.9013 \pm 0.0440$ |
| $\alpha$ (tail) | 0.5 | $0.9918 \pm 0.0067$ | $0.9510 \pm 0.0186$ | $0.9231 \pm 0.0302$ |
| $\alpha$ (tail) | 0.7 | $0.9903 \pm 0.0071$ | $0.9504 \pm 0.0187$ | $0.9240 \pm 0.0277$ |
| $T$ | 2 | $0.9929 \pm 0.0073$ | $0.9442 \pm 0.0228$ | $0.9127 \pm 0.0367$ |
| $T$ | 4 | $0.9932 \pm 0.0060$ | $0.9331 \pm 0.0390$ | $0.9004 \pm 0.0528$ |

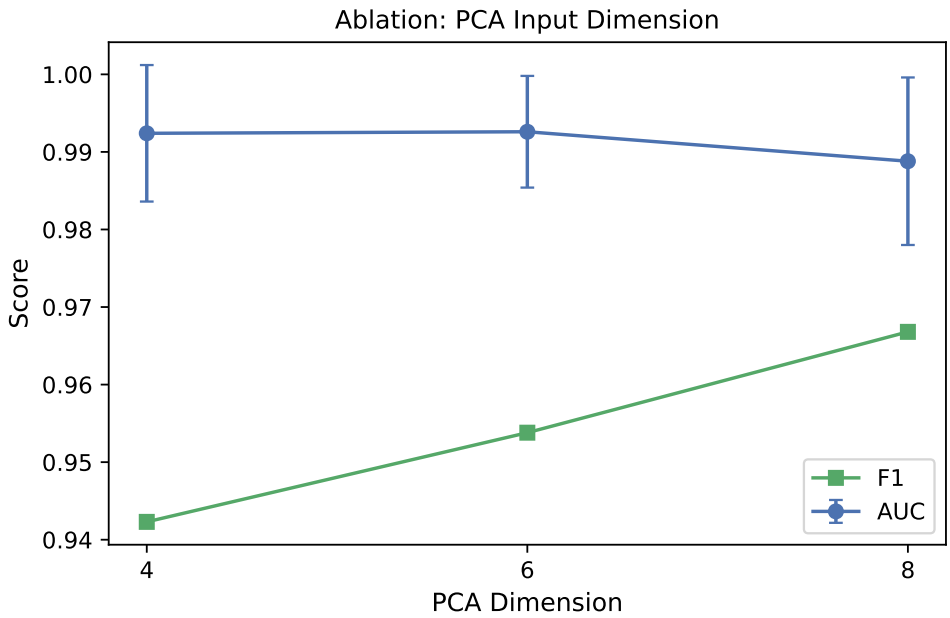


Figure 4: Effect of PCA input dimension on AUC and F1. Larger compressed inputs improve F1/MCC, with 6 dimensions offering the cleanest balance.

### 5.2 Which quantum layer position is best?

The placement ablation makes it clear that the quantum layer must not be applied directly to the raw PCA vector. Without a classical projection to bound inputs into $[-\pi, \pi]$, angle encoding degrades due to rotation wrap-around, and the quantum circuit loses its ability to separate classes. Both middle and tail placement avoid this failure, with tail placement offering a slightly better performance-cost balance. This is a more actionable design lesson than the binary question of whether a quantum layer is present at all.

### 5.3 Is the hybrid student worth the cost?

For WDBC, the answer is generally no. The classical student reaches AUC above 0.994 with sub-second training and sub-millisecond inference per fold. Hybrid inference at $\sim$70 ms is acceptable for batch applications but is two to three orders of magnitude slower in simulation; on actual quantum hardware, latency would be further constrained by qubit coherence times.

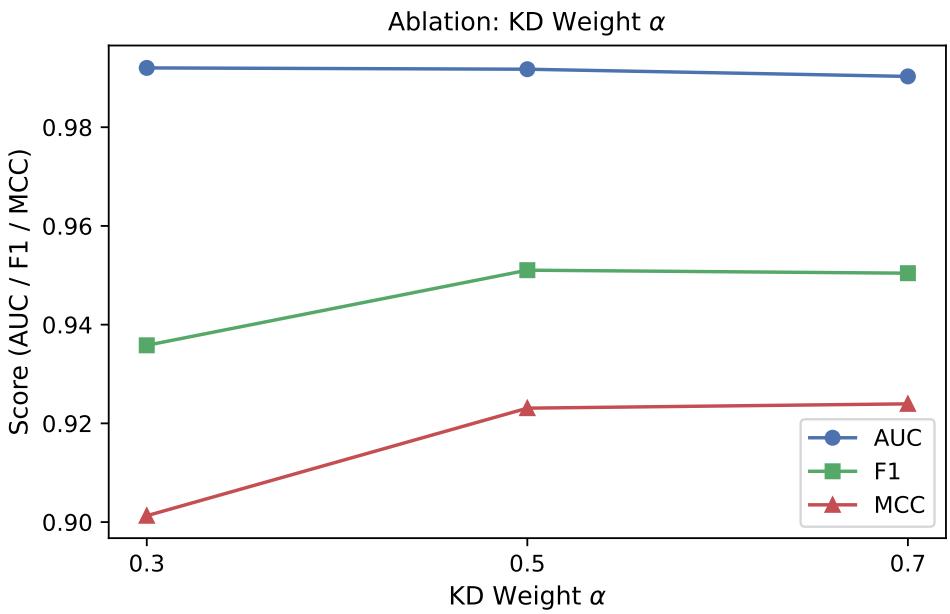


Figure 5: Effect of KD weight $\alpha$ under tail placement. Lower $\alpha$ slightly improves AUC, while $\alpha = 0.5$–$0.7$ yields better F1/MCC.

Table 5: Cross-dataset comparison of teacher entropy and KD benefit for the hybrid student. $\Delta$ values are computed as Hybrid-KD minus Hybrid-NoKD. Teacher entropy $\bar{H}$ is the mean per-sample soft-output entropy averaged over validation folds.

| Dataset | Teacher AUC | $\bar{H}_{\text{val}}$ (bits) | $\Delta$AUC | $\Delta$MCC |
|---|---|---|---|---|
| WDBC ($N$=569) | 0.994 | 0.100 | +0.004 | −0.007 |
| Heart ($N$=270) | 0.889 | 0.470 | +0.012 | +0.022 |
| Pima ($N$=768) | 0.782 | 0.707 | +0.006 | +0.017 |

The hybrid layer therefore behaves more like a research probe than a cost-effective production choice on this dataset.

### 5.4 Parameter Efficiency

Table 6 compares trainable parameter counts across all models for PCA $d' = 4$. The middle-placement hybrid student uses only 201 parameters (4 quantum, 197 classical), which is fewer than the classical student's 225, yet achieves comparable AUC and F1 on WDBC. The front-placement variant is the most compact (53 parameters) but fails for the encoding reasons discussed in Section 5. The tail-placement hybrid (305 parameters) trades a modest parameter increase for the best AUC/MCC in the placement ablation. These counts show that the quantum layer contributes only 4 additional trainable parameters, so any performance difference is attributable to the quantum circuit's expressivity rather than model capacity.

### 5.5 Teacher Strength and KD Benefit

To test whether a stronger teacher yields greater KD benefit for the hybrid student, we train two additional teacher architectures on WDBC and distill into the same middle-placement hybrid student. Table 7 reports the results.

The weak teacher (705 parameters) already reaches T-AUC of 0.9941, close to the baseline teacher's 0.9939, and the distillation gap between weak and baseline students is negligible (S-

Table 6: Trainable parameter counts by model ($d' = 4$, $n_{\text{qubits}}$=4, $L$=1). "Classical" and "Quantum" columns separate parameter types.

| Model | Classical | Quantum | Total |
|---|---|---|---|
| Teacher (MLP-64-32) | 2 433 | — | 2 433 |
| Student-Classic [16,8] | 225 | — | 225 |
| Student-Hybrid (front) | 49 | 4 | 53 |
| Student-Hybrid (middle) | 197 | 4 | 201 |
| Student-Hybrid (tail) | 301 | 4 | 305 |

Table 7: Ablation of teacher architecture strength on WDBC (hybrid-KD student, $d' = 4$, $\alpha = 0.5$, $T = 2$). The baseline teacher uses $[64, 32]$.

| Teacher | Params | T-AUC | S-AUC | S-F1 | S-MCC |
|---|---|---|---|---|---|
| Weak [32,16] | 705 | $0.9941 \pm 0.0056$ | $0.9934 \pm 0.0058$ | $0.9420 \pm 0.0194$ | $0.9094 \pm 0.0310$ |
| Baseline [64,32] | 2 433 | 0.9939 | 0.9931 | 0.9395 | 0.9057 |
| Strong [128,64] | 8 961 | $0.9933 \pm 0.0055$ | $0.9894 \pm 0.0092$ | $0.9477 \pm 0.0308$ | $0.9196 \pm 0.0465$ |

AUC 0.9934 vs. 0.9931). The strong teacher (8 961 parameters) does not improve student AUC—in fact S-AUC drops slightly to 0.9894—but yields the best S-F1 (0.9477) and S-MCC (0.9196). This confirms that on a near-saturated task like WDBC, teacher strength has diminishing returns: once the teacher is accurate enough, additional capacity does not translate into better distillation signal, and a larger teacher may even introduce optimization noise for the small hybrid student.

### 5.6 Limitations

This study uses noiseless simulation on PennyLane's `default.qubit` [8] and focuses its main ablation analysis on WDBC. Although Appendices B and C now add two real additional benchmarks (Pima Diabetes and Heart Statlog), broader generalization is still limited: we do not yet have matching placement or $\alpha$ ablations across multiple additional datasets, nor do we evaluate shot noise, hardware noise, or calibration drift. The $\alpha$ sweep is reported only for tail placement on WDBC, so the interaction between KD weight, placement, and dataset difficulty remains underexplored. Future work should extend the same protocol to broader biomedical tabular datasets and to noise-aware simulations or hardware execution.

## 6 Conclusion

We presented a lightweight hybrid quantum-classical framework for biomedical tabular binary classification under a controlled teacher-student pipeline. The central finding is that quantum layer placement dominates over both KD and architecture choice: front placement fails consistently due to unbounded angle encoding, while middle and tail placement remain competitive. KD improves AUC and reduces training time for the hybrid student, but its benefit is modest when the teacher's soft outputs carry low entropy on near-saturated tasks (WDBC). Cross-dataset comparison reveals a non-monotonic relationship: moderate teacher uncertainty (Heart Statlog) coincides with the largest KD gains for the hybrid student, while both near-saturated (WDBC) and highly uncertain (Pima) teachers yield diminishing returns. These findings support a pragmatic view of HQC modeling: careful architectural placement is necessary, and strong classical baselines remain hard to outperform on small biomedical tabular benchmarks. The supplementary Pima and Heart examples refine rather than overturn this conclusion: when teacher entropy is no longer near-zero, KD can modestly help hybrid AUC/MCC, but the effect

depends on both teacher entropy and teacher reliability, and the simulation cost stays far above that of the classical alternatives.

Future work should expand to additional datasets, evaluate noise-aware settings, and test whether the placement effects and KD dynamics observed here persist under broader feature regimes and alternative ansatz families with higher expressibility.


## Acknowledgment

We thank Panda Intelligence Software LTD for supporting this research.


## A Teacher Soft-Output Entropy Analysis

To contextualize the limited KD benefit, we analyze the entropy of the teacher's soft predictions over the training folds. For a binary classifier, the per-sample soft entropy is

$$H(p) = -p \log_2 p - (1-p) \log_2 (1-p), \tag{2}$$

where $p = \sigma(z_{\text{teacher}})$ is the teacher's predicted probability. High-confidence predictions ($p \approx 0$ or $p \approx 1$) yield $H \approx 0$, leaving no additional information beyond the hard label.

Across all 5 folds and training samples, the teacher's mean soft-output entropy is $\bar{H}_{\text{train}} = 0.0968$ bits (std. 0.2197), while the validation-fold mean is $\bar{H}_{\text{val}} = 0.1003$ bits (std. 0.2271). The fraction of high-confidence predictions satisfying $|p - 0.5| > 0.45$ is 89.7% on training samples and 89.6% on validation samples. This confirms that the teacher is highly confident on most samples, and its soft targets provide only limited additional signal relative to one-hot labels. This helps explain why KD offers limited benefit to the classical student and why larger $\alpha$ (more soft-target weight) can degrade hybrid student F1/MCC.

## B Additional Dataset Example: Pima Diabetes

To test whether the WDBC observations transfer to a less saturated biomedical task, we ran the same 5-fold protocol on the Pima Indians Diabetes dataset [10] (768 samples, 8 raw features, positive rate 34.9%). For this supplementary example we used PCA $d' = 4$, $T = 2$, and the tail placement identified as strongest on WDBC for the hybrid models.

Table 8: Pima Diabetes main results (5-fold CV, PCA $d' = 4$). $p$-values from paired $t$-test vs. Student-Classic (best classical baseline). None are significant at $\alpha$=0.05.

| Model | AUC | F1 | MCC | Train (s/fold) | $p_{\text{AUC}}$ |
|---|---|---|---|---|---|
| Teacher (MLP-64-32) | $0.7817 \pm 0.0336$ | $0.5706 \pm 0.0641$ | $0.3671 \pm 0.0817$ | $0.39 \pm 0.02$ | — |
| Student-Classic | $0.7816 \pm 0.0290$ | $0.5752 \pm 0.0821$ | $0.3774 \pm 0.0983$ | $0.32 \pm 0.01$ | — |
| Student-Classic-KD | $0.7781 \pm 0.0346$ | $0.5701 \pm 0.0721$ | $0.3665 \pm 0.0914$ | $0.60 \pm 0.02$ | 0.386 |
| Student-Hybrid-NoKD | $0.7793 \pm 0.0286$ | $0.5941 \pm 0.0653$ | $0.3690 \pm 0.0866$ | $606.69 \pm 100.33$ | 0.683 |
| Student-Hybrid-KD | $0.7852 \pm 0.0334$ | $0.5800 \pm 0.0700$ | $0.3861 \pm 0.0908$ | $617.33 \pm 14.21$ | 0.422 |

The Pima example paints a different KD picture from WDBC. The teacher's mean soft-output entropy is 0.704 bits on training folds and 0.707 bits on validation folds, with only about 14% of predictions satisfying $|p - 0.5| > 0.45$. This indicates substantially richer soft targets than on WDBC. Correspondingly, the KD hybrid achieves the best AUC and MCC on Pima, while the non-distilled hybrid retains the best F1. Even so, the practical conclusion remains similar: the hybrid models are roughly three orders of magnitude slower to train than the classical baselines, so the metric gains are modest relative to simulation cost. We therefore view

Pima as supportive evidence that KD can matter more when teacher entropy is higher, but not yet enough to overturn the overall cost-benefit assessment of lightweight classical models.

# C Additional Dataset Example: Heart Statlog

To add a second supplementary biomedical benchmark, we ran the same 5-fold protocol on the Heart Statlog dataset [11] (270 samples, 13 raw features, positive rate 44.4%). As in the Pima example, we used PCA $d' = 4$, $T = 2$, and the tail placement identified as strongest on WDBC for the hybrid models.

Table 9: Heart Statlog main results (5-fold CV, PCA $d' = 4$). $p$-values from paired $t$-test vs. Student-Classic. None are significant at $\alpha$=0.05.

| Model | AUC | F1 | MCC | Train (s/fold) | $p_{\text{AUC}}$ |
|---|---|---|---|---|---|
| Teacher (MLP-64-32) | $0.8894 \pm 0.0543$ | $0.7932 \pm 0.0774$ | $0.6266 \pm 0.1415$ | $0.15 \pm 0.02$ | — |
| Student-Classic | $0.8878 \pm 0.0552$ | $0.8070 \pm 0.0706$ | $0.6643 \pm 0.1208$ | $0.12 \pm 0.00$ | — |
| Student-Classic-KD | $0.8892 \pm 0.0470$ | $0.8031 \pm 0.0727$ | $0.6547 \pm 0.1205$ | $0.22 \pm 0.00$ | 0.891 |
| Student-Hybrid-NoKD | $0.8736 \pm 0.0704$ | $0.7841 \pm 0.0860$ | $0.6116 \pm 0.1595$ | $221.48 \pm 4.68$ | 0.204 |
| Student-Hybrid-KD | $0.8857 \pm 0.0533$ | $0.7968 \pm 0.0760$ | $0.6340 \pm 0.1392$ | $214.08 \pm 9.04$ | 0.827 |

Heart Statlog lands between WDBC and Pima in teacher uncertainty. The teacher's mean soft-output entropy is 0.471 bits on training folds and 0.470 bits on validation folds, with high-confidence fractions of 38.1% and 36.3%, respectively. Compared with the non-distilled hybrid, the KD hybrid improves AUC from 0.8736 to 0.8857, MCC from 0.6116 to 0.6340, and slightly reduces training time, but it still does not surpass the classical student on thresholded metrics. The Heart example therefore supports a narrower version of the Pima conclusion: richer teacher uncertainty can make KD more useful for the hybrid model, yet the overall cost-benefit picture still favors lightweight classical baselines.

# References


[1] W. Wolberg, O. Mangasarian, N. Street, and W. Street, "Breast Cancer Wisconsin (Diagnostic)," UCI Machine Learning Repository, 1995.

[2] G. Hinton, O. Vinyals, and J. Dean, "Distilling the Knowledge in a Neural Network," *arXiv*:1503.02531, 2015.

[3] M. Cerezo et al., "Variational Quantum Algorithms," *Nature Reviews Physics*, vol. 3, pp. 625–644, 2021.

[4] M. Schuld and F. Petruccione, *Machine Learning with Quantum Computers*. Springer, 2021.

[5] A. Sagingalieva et al., "Hyperparameter Optimization of Hybrid Quantum Neural Networks for Car Classification," *arXiv*:2205.04878v2, 2023.

[6] J. R. McClean, S. Boixo, V. N. Smelyanskiy, R. Babbush, and H. Neven, "Barren Plateaus in Quantum Neural Network Training Landscapes," *Nature Communications*, vol. 9, p. 4812, 2018.

[7] Q. H. Nguyen et al., "Classical-to-Quantum Transfer Learning for Spoken Command Recognition Based on Quantum Neural Networks," *arXiv*:2110.11919, 2022.

[8] V. Bergholm et al., "PennyLane: Automatic differentiation of hybrid quantum-classical computations," *arXiv*:1811.04968, 2018.

[9] S. Sim, P. D. Johnson, and A. Aspuru-Guzik, "Expressibility and Entangling Capability of Parameterized Quantum Circuits for Hybrid Quantum-Classical Algorithms," *Advanced Quantum Technologies*, vol. 2, no. 12, 2019.

[10] J. W. Smith, J. E. Everhart, W. C. Dickson, W. C. Knowler, and R. S. Johannes, "Using the ADAP Learning Algorithm to Forecast the Onset of Diabetes Mellitus," *Proceedings of the Annual Symposium on Computer Applications in Medical Care*, pp. 261–265, 1988.

[11] R. Detrano, A. Janosi, W. Steinbrunn, M. Pfisterer, J.-J. Schmid, S. Sandhu, K. M. Guppy, S. Lee, and V. Froelicher, "International Application of a New Probability Algorithm for the Diagnosis of Coronary Artery Disease," *The American Journal of Cardiology*, vol. 64, no. 5, pp. 304–310, 1989.

[12] S. Jerbi, L. J. Fiderer, V. Mnih, and H. Poulsen Nautrup, "Quantum Policy Gradient Algorithms with Softmax Action Selection," *Nature Communications*, vol. 14, p. 5040, 2023.

[13] S. Lloyd, B. T. Kiani, D. M. Arvidsson-Shukur, S. Girvin, and A. O. Sushkov, "Quantum Foraging in High-Dimensional Spaces," *arXiv*:2405.04050, 2024.

[14] J. Herrmann, S. M. Llima, A. Rembold, et al., "Realizing Quantum Convolutional Neural Networks on a Superconducting Quantum Processor to Accelerate Diagnosis of Medical Images," *Advanced Quantum Technologies*, vol. 6, no. 9, 2023.

[15] A. Canatar, B. Ruben, J. B. Park, M. M. Abdallah, I. Arun, and S. M. Vakili, "A Statistical Mechanics Perspective on the Detectability of Quantum Kernels," *arXiv*:2402.04588, 2024.

[16] Z. Chen, Y. Gao, and X. Wang, "Quantum Knowledge Distillation: A Survey," *arXiv*:2404.17857, 2024.

[17] T. Hur, L. Wossnig, N.-H. Tseng, S. M. Mousavi, M. Dano, and S. Y. Nam, "Quantum Knowledge Distillation for Efficient Deployment of Quantum Neural Networks," *Expert Systems with Applications*, vol. 259, p. 125300, 2025.