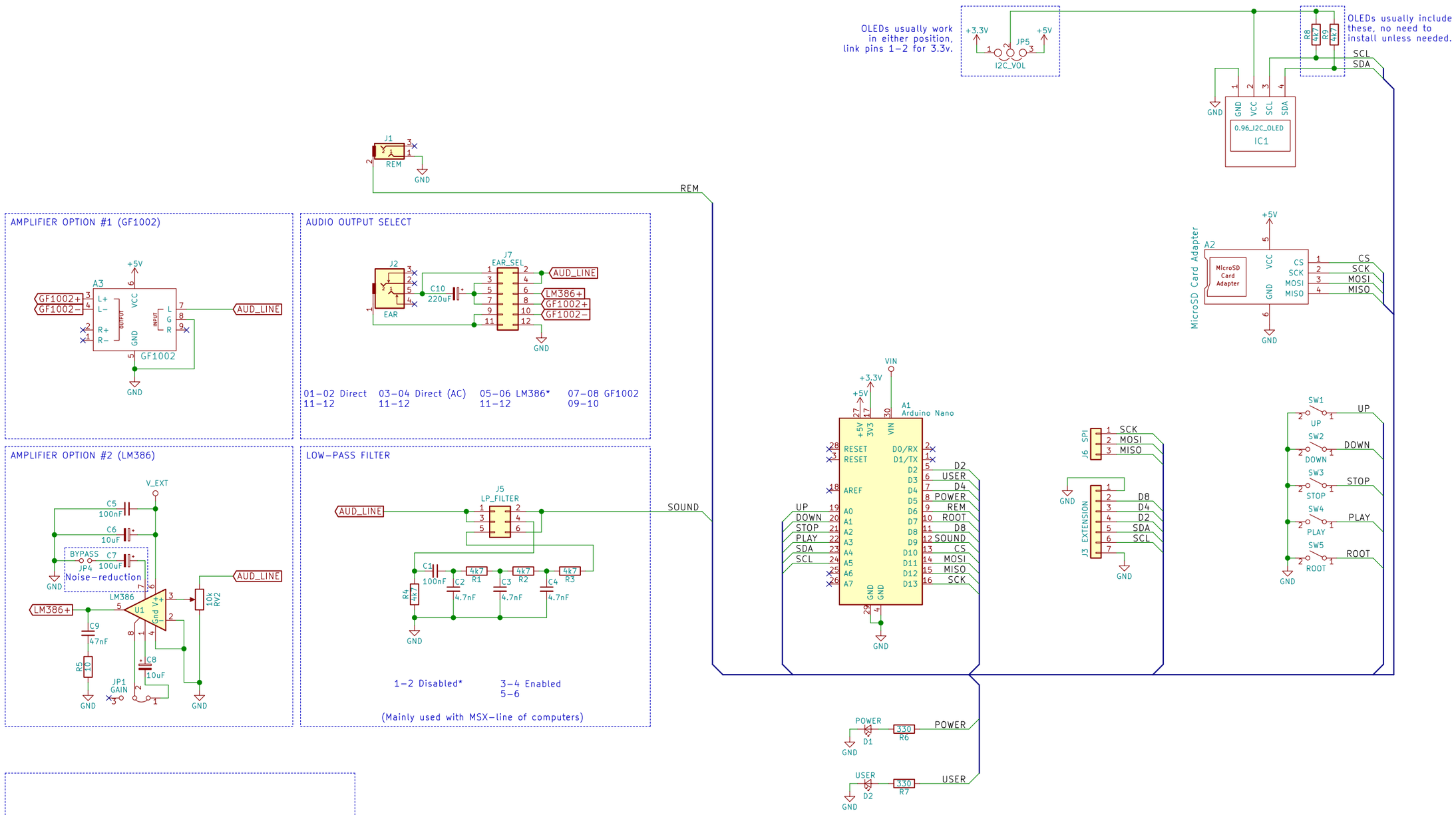

Based on the DigiWavuino, but I wanted to build my own version of it with a lot of features no one would ever need – mostly because I wanted to play around with various things Arduino. A 128x64 OLED can be mounted directly, but the main goal of the project was to hide most things behind a faceplate instead.

Sheet: /
File: 8bitWave Module.sch

Title: 8BIT WAVE

Size: A3	Date:	Rev: B
KiCad E.D.A. kicad (5.1.5)–3		Id: 1/1