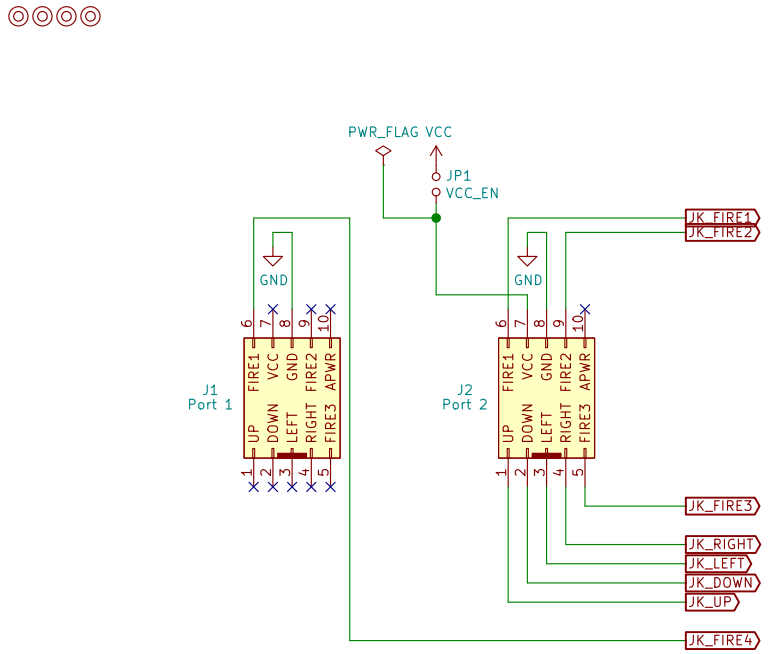


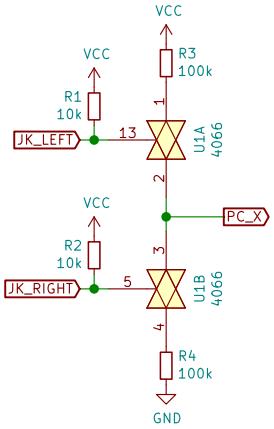


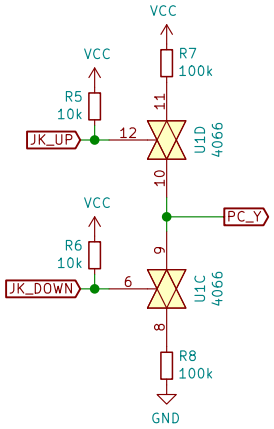


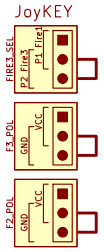


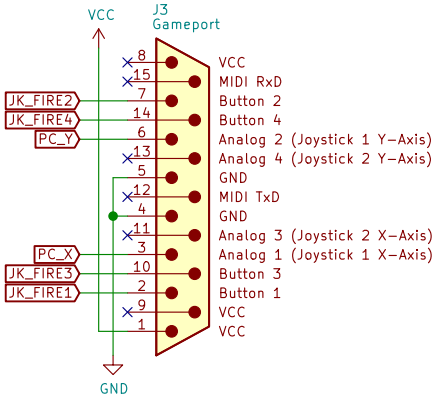


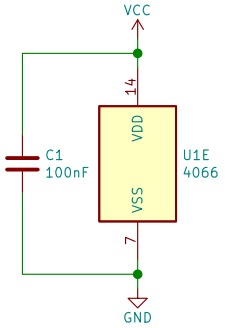


Rewires the C64 JoyKEY for a 4-button layout suitable for use with PCs with a 15-pin gameport. While originally a system for analog joysticks, the adoption of gamepads such as the Gravis gamepad makes this a viable option for many games.
*DESIGN IS UNTESTED*

Sheet: /
File: Gameport.sch

**Title: Gameport (C64 JoyKEY)**

| | | |
|---|---|---|
| Size: A4 | Date: | **Rev: A** |
| KiCad E.D.A. kicad (5.1.8)-1 | | Id: 1/1 |