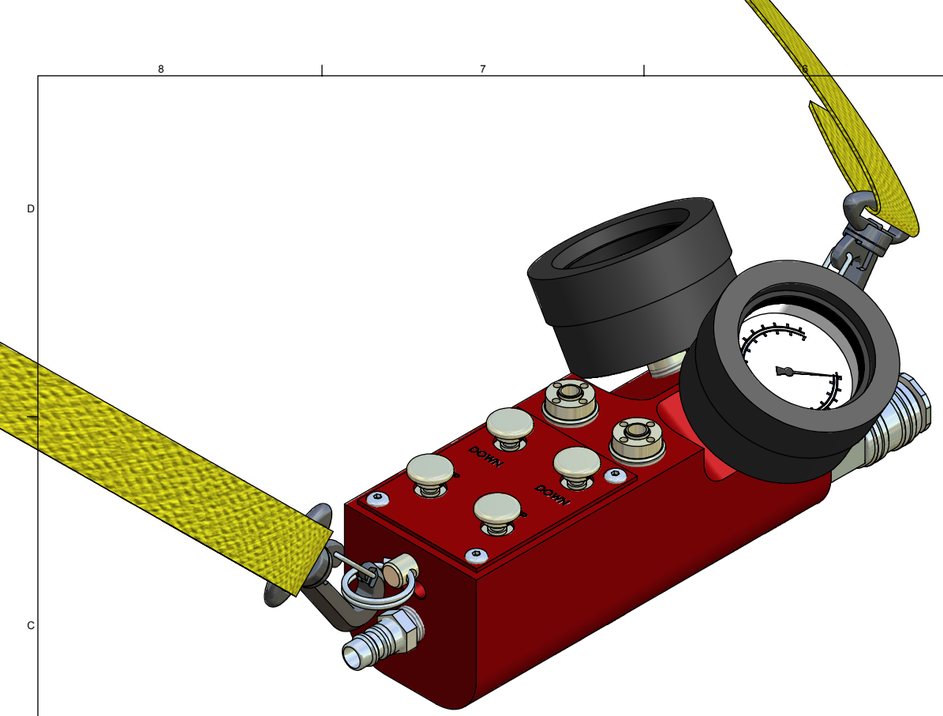

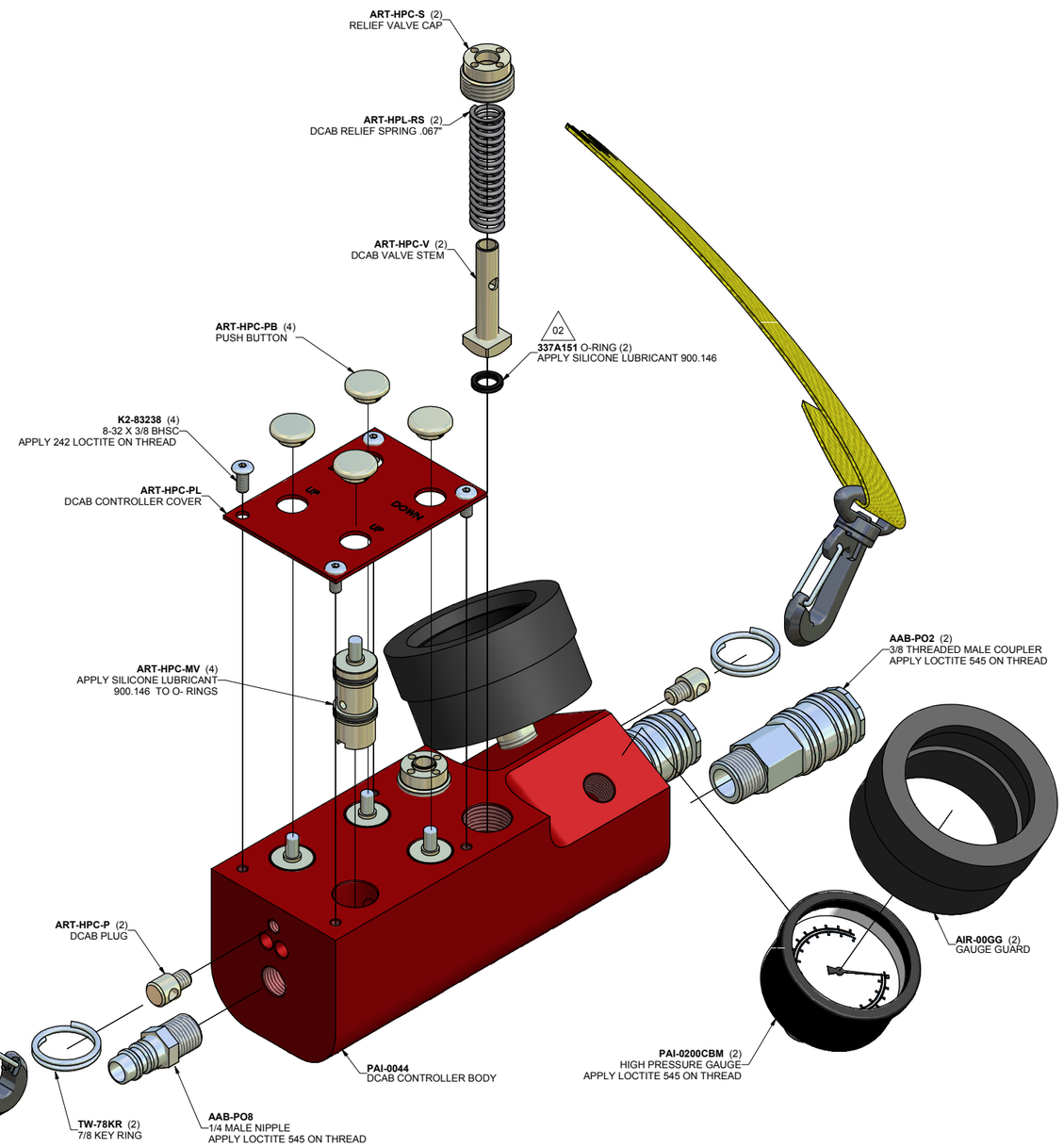

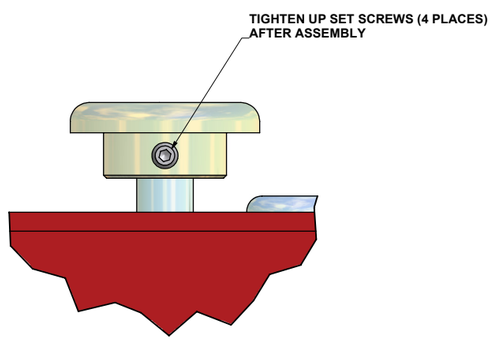

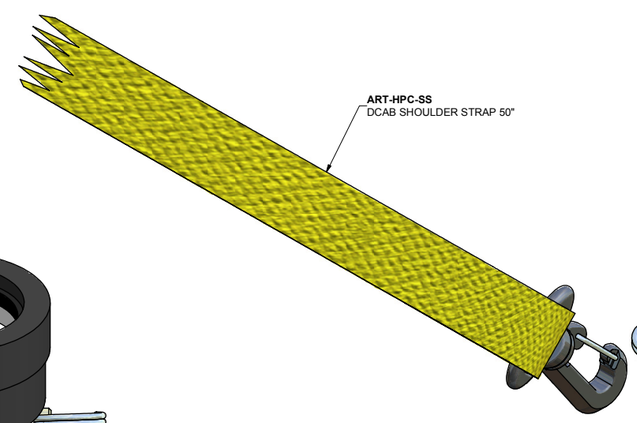

DETAIL A

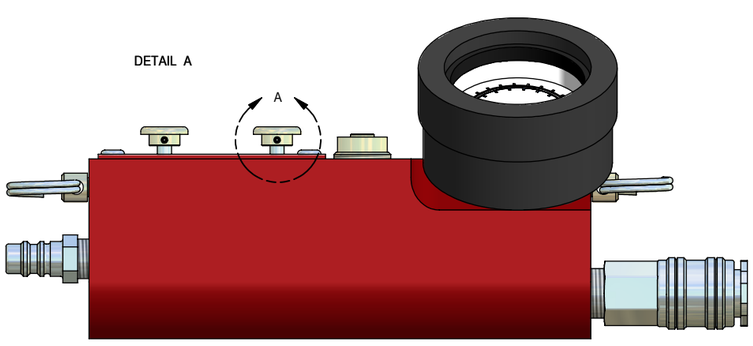

REV	DESCRIPTION	BY	DATE
01	RELEASED FOR PRODUCTION	D. LOPEZ	7/17/2006
02	WAS: ART-HPC-SO	D. LOPEZ	9/19/2006

PART NO: | MAT'L SPEC. | NOMINAL SIZE:

REPORT ERRORS & CHANGES
REMOVE ALL SHARP EDGES
UNLESS OTHERWISE SPECIFIED
DIMENSIONS ARE IN INCHES
TOLERANCE ON:
DECIMALS .XX ± .010 .XXX ± .005
ANGLES ± 1/2°

COPYRIGHT ©
NOT TO BE REPRODUCED OR
USED TO MAKE OTHER
DRAWINGS OR MACHINERY

DATE: 7/14/2006
DRAWN: D.LOPEZ

HURST JAWS OF LIFE
HALE PRODUCTS, INC.
A Unit of IDEX Corporation
Shelby, NC 28150 USA

TITLE HIGH PRESSURE AIRBAG CONTROLLER

SIZE D | DWG NO: AIR-DCAB

SCALE: 1:1 | SHEET 1 OF 1 | REV: 02