HURST JAWS OF LIFE® AIRSHORE
711 North Post Rd Shelby, NC 28150
704-487-6961 800-537-2659

Airshore Rescue Strut

Tabulated Data for Use in Excavations

AIRSHORE PNEUMATIC RESCUE STRUT

LENGTH		CAPACITY (lbs) **	
SIZE (inch)	SIZE (feet)	2 PINS	1 PIN
13-18	1 to 1 1/2	30,000 lbs	19,000 lbs
21-28	2	30,000 lbs	19,000 lbs
26-37	2 to 3	30,000 lbs	19,000 lbs
33-49	3 to 4	30,000 lbs	19,000 lbs
45-67	4 to 5 1/2	25,000 lbs	19,000 lbs
54-84	4 1/2 to 7	25,000 lbs	19,000 lbs
63-97	5 to 8	25,000 lbs	19,000 lbs
84-132	7 to 11	20,000 lbs	14,000 lbs
93-144	8 to 12	20,000 lbs	14,000 lbs

**** Safety Factor is 2:1**

TABLE 1 MAXIMUM ALLOWABLE SPACING*

SOIL TYPE	TRENCH DEPTH	TRENCH WIDTH	HORZ. SPACING 2 PINS	HORZ. SPACING 1 PIN	VERT. SPACING
A-25	4 to 10	to 6	8	8	4
		6 to 12	8	8	4
		12 to 16	5	5	4
	10 to 15	to 6	8	8	4
		6 to 12	8	6	4
		12 to 16	3	3	4
	15 to 20	to 6	8	6	4
		6 to 12	6	5	4
		12 to 16	2	1	4
B-45	4 to 10	to 6	8	8	4
		6 to 12	8	6	4
		12 to 16	3	2	4
	10 to 15	to 6	7	6	4
		6 to 12	6	4	4
		12 to 16	3	2	3
	15 to 20	to 6	5	4	4
		6 to 12	5	3	4
		12 to 16	2	2	3
C-60	4 to 10	to 6	8	6	4
		6 to 12	6	4	4
		12 to 16	3	2	3
	10 to 15	to 6	5	4	4
		6 to 12	4	4	4
		12 to 16	2	2	2
	15 to 20	to 6	4	4	4
		6 to 12	3	3	4

* All data is shown in FEET

NOTES:

1. Soil type to be determined by a competent person.
2. Charts are based on soil types as defined in OSHA, CFR 29, Sub Part P, March 1996.
3. Type C-60 soil is defined as C soil that will stand long enough for shores to be installed. In C-80 soil the shores cannot be installed because the soil will fall in before it is shored.
4. The Airshore Rescue Strut should be used against timber lagging, plywood or a minimum 6" wide by 18" long spot shore rail.
5. In C-60 soil 3/4" Finn-Form plywood or timber lagging shall be used in all cases to prevent sloughing and raveling
6. In all soils sheeting should be used to prevent sloughing or raveling if it occurs.
7. Spot shore rails may be set horizontal or vertical.
8. All Airshore Resue Strut attachments may be used with this shore at the capacities listed.

REGISTERED PROFESSIONAL ENGINEER
ADRIANUS J. VERMEULEN
No. 69082
Exp. 6/30/14
CIVIL
STATE OF CALIFORNIA

J.M. TURNER ENGINEERING, INC.
CONSULTING ENGINEERS
1325 COLLEGE AVE., SANTA ROSA, CA. 95404
(707) 528-4503 FAX (707) 528-4505

DATE	REVISED	JOB NO:	SHEET #
9/7/1998	3/13/2012	13088-1	1 of 2

HURST JAWS OF LIFE® AIRSHORE
711 North Post Rd Shelby, NC 28150
704-487-6961 800-537-2659

Airshore Rescue Strut

Tabulated Data for Use in Excavations

INSTALLATION PROCEDURE

1. Soil must first be classified by a competent person in accordance with OSHA appendix A.
2. Tabulated Data allows for a 200 lb/ft^2 surcharge load. Move surcharge away from excavation or space shores closer together to allow for larger surcharge loads.
3. Inspect equipment to ensure it is in proper working order.
4. Struts are to be placed and pressurized from outside of the trench or from within a shored area. Under NO circumstances is a worker allowed to enter an unshored area.
5. Pressurize struts to the minimum recommended pressure.
6. There should be a minimum of three columns of shoring in excavations over 10 feet long and two columns if it is less than ten feet long. Shoring columns shall be spaced in accordance with the tabulated data found in TABLE 1.
7. Plywood or lagging is to be used to prevent sloughing and raveling. In all cases where sloughing or raveling occurs it must be used. In soil types A & B the sheeting may be spaced as needed to stop the sloughing and raveling. In C-60 soil plywood sheeting must always be used.

REMOVAL PROCEDURE

1. Shores are to be removed from the bottom of the trench up. Workers should be outside of the trench or inside of shored areas when removing shoring.
2. Previously shored trenches are more prone to collapse and should be backfilled or barricaded to prevent workers or equipment from falling into the trench if it collapses.

REGISTERED PROFESSIONAL ENGINEER
ADRIANUS J. VERMEULEN
No. 69082
Exp. 6/30/14
CIVIL
STATE OF CALIFORNIA

J.M. TURNER ENGINEERING, INC.
CONSULTING ENGINEERS
1575 COLLEGE AVE. SANTA ROSA, CA 95404
(707) 523-4503 FAX (707) 523-4505

DATE	REVISED	JOB NO:	SHEET #
9/7/1998	3/13/2012	13088-1	2 of 2

HURST JAWS OF LIFE® AIRSHORE
711 North Post Rd Shelby, NC 28150
704-487-6961 800-537-2659

Airshore Rescue Strut

Tabulated Data for Use in Rescue Situations

AIRSHORE PNEUMATIC RESCUE STRUT			
LENGTH		CAPACITY (lbs) **	
SIZE (inch)	SIZE (feet)	2 PINS	1 PIN
13-18	1 to 1 1/2	30,000 lbs	19,000 lbs
21-28	2	30,000 lbs	19,000 lbs
26-37	2 to 3	30,000 lbs	19,000 lbs
33-49	3 to 4	30,000 lbs	19,000 lbs
45-67	4 to 5 1/2	25,000 lbs	19,000 lbs
54-84	4 1/2 to 7	25,000 lbs	19,000 lbs
63-97	5 to 8	25,000 lbs	19,000 lbs
84-132	7 to 11	20,000 lbs	14,000 lbs
93-144	8 to 12	20,000 lbs	14,000 lbs
** Safety Factor is 2:1			

NOTES:

1. The AirShore Rescue Strut can be used at any angle from horizontal to vertical provided the ends bear on a surface perpendicular to the shore.

INSTALLATION PROCEDURE

1. Soil must first be classified by a competent person in accordance with OSHA appendix A.
2. Tabulated Data allows for a 200 lb/ft^2 surcharge load. Move surcharge away from excavation or space shores closer together to allow for larger surcharge loads.
3. Inspect equipment to ensure it is in proper working order.
4. Struts are to be placed and pressurized from outside of the trench or from within a shored area. Under NO circumstances is a worker allowed to enter an unshored area.
5. Pressurize struts to the minimum recommended pressure.
6. There should be a minimum of three columns of shoring in excavations over 10 feet long and two columns if it is less than ten feet long. Shoring columns shall be spaced in accordance with the tabulated data found in TABLE 1.
7. Plywood or lagging is to be used to prevent sloughing and raveling. In all cases where sloughing or raveling occurs it must be used. In soil types A & B the sheeting may be spaced as needed to stop the sloughing and raveling. In C-60 soil plywood sheeting must always be used.

REMOVAL PROCEDURE

1. Shores are to be removed from the bottom of the trench up. Workers should be outside of the trench or inside of shored areas when removing shoring.
2. Previously shored trenches are more prone to collapse and should be backfilled or barricaded to prevent workers or equipment from falling into the trench if it collapses.

REGISTERED PROFESSIONAL ENGINEER
ADRIANUS J. VERMEULEN
No. 69082
Exp. 6/30/14
CIVIL
STATE OF CALIFORNIA

J.M. TURNER ENGINEERING, INC.
CONSULTING ENGINEERS
1305 COLLEGE AVE., SANTA ROSA, CA 95404
(707) 528-4505 FAX (707) 528-4506

DATE	REVISED	JOB NO:	SHEET #
9/7/1998	3/13/2013	13088-1	1 of 1

AirShore

Tabulated Data For Use in Excavations with Plywood & Plank

TABLE 1-MAXIMUM ALLOWABLE SPACING

Soil Type	Trench DEPTH (FT)	Trench Width (FT)	Horizontal Spacing (FT)	Vertical Spacing (FT)
A-25	4 to 10	to 6	8	4
		6 to 12	8	4
		12 to 16	5	4
	10 to 15	to 6	8	4
		6 to 12	8	4
		12 to 16	4	4
	15 to 20	to 6	8	4
		6 to 12	6	4
		12 to 16	2	4
B-45	4 to 10	to 6	8	4
		6 to 12	8	4
		12 to 16	4	4
	10 to 15	to 6	7	4
		6 to 12	6	4
		12 to 16	4	4
	15 to 20	to 6	5	4
		6 to 12	5	4
		12 to 16	4	4
C-60	4 to 10	to 6	8	4
		6 to 12	6	4
		12 to 16	4	4
	10 to 15	to 6	5	4
		6 to 12	4	4
		12 to 16	4	4
	15 to 20	to 6	4	4
		6 to 12	4	4
		12 to 16	4	4

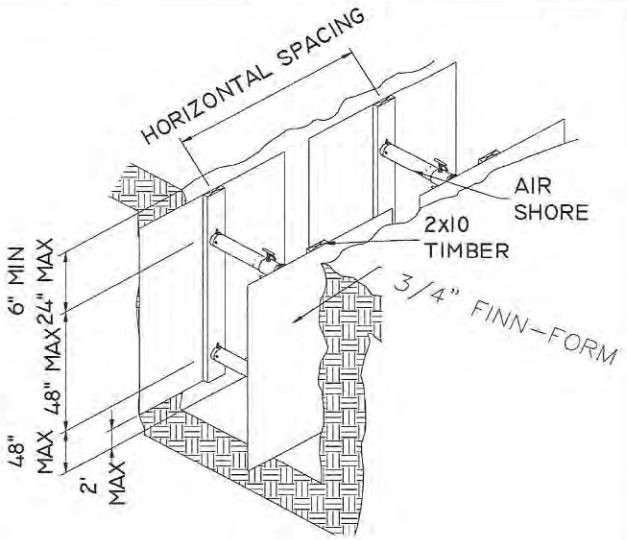

Recommended strut pressures (min.)

TYPE A & B		TYPE C	
4 to 20 ft	116 PSI	4 to 20ft	116 PSI

Installation Procedure

1) Soil must first be classified by a competent person in accordance with OSHA appendix A.
2) Tabulated Data allows for a 200 PSF surcharge load. Move surcharge away from excavation or space shores closer together to allow for larger surcharge loads.
3) Inspect equipment to be sure that it is in proper working order.
4) Struts are to be placed and pressurized from outside the trench or from within a shored area. Under no circumstances is a worker allowed to enter an unshored area.
5) Pressurize struts to the minimum recommended pressure.
6) There should be a minimum of three columns of shoring in excavations over 10 ft long and two columns if it is less than 10 ft long. Shoring columns shall be spaced in accordance with the tabulated data.
7) Plywood shall be 3/4" Finn Form, Planks shall be 2" thick timber DF #2 or Better

REMOVAL PROCEDURE

1) Shores are to be removed from the bottom of the trench up. Workers should be outside the trench or inside shored areas when removing shoring.
2) Previously shored trenches are more prone to collapse and should be backfilled or barricaded to prevent workers or equipment from falling into the trench if it collapses.

DATE	REVISED	JOB NO: 13088-1
9/11/1998	3/13/2012	SHT 1 of 1

HURST JAWS OF LIFE® AIRSHORE
711 North Post Rd Shelby, NC 28150
704-487-6961 800-537-2659

Airshore Rescue Tool Gantry/A-Frame

Tabulated Data for Use

AIRSHORE GANTRY / A-FRAME

HEIGHT (Feet) Size (in)	Size (ft)	CAPACITY (Pounds)* GANTRY CAPACITY	EARTH BEARING AREA** (SQR FEET)	MAX LEG ANGLE Degrees from Vertical	HORIZONTAL FORCE (Pounds)***
54-84	4 1/2 to 7	12,000	2	45	6,000
63-97	5 to 8	12,000	2	45	6,000
84-132	7 to 11	9,750	2	45	4,875
93-144	8 to 12	8,000	1	45	4,000

* Safety Factor is 2:1
** Required Per Leg
*** Force to be Resisted per Leg

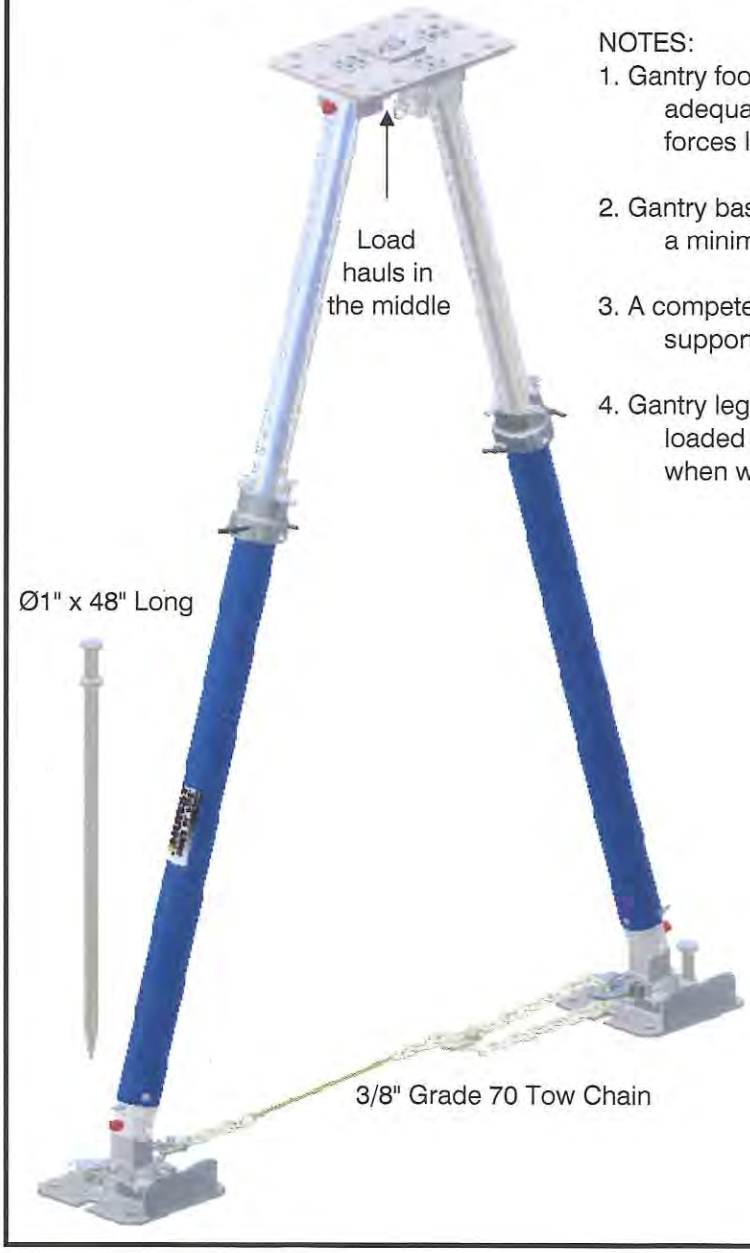

NOTES:

1. Gantry foot plate to be set flat against a solid surface. Provide adequate pins or solid bearing surfaces to resist horizontal forces listed.
2. Gantry base chain and connectors shall be 3/8", Grade 70 with a minimum safe working load equal to 6,600 pounds.
3. A competent person should determine that loads being supported with the ART Gantry Frame have lateral stability.
4. Gantry legs are subject to collapse if they are impacted or loaded perpendicular to their long axis. Use caution when working in the vicinity of a loaded Gantry Frame.

REGISTERED PROFESSIONAL ENGINEER
ADRIANUS J. VERMEULEN
No. 69082
Exp. 6/30/14
CIVIL
STATE OF CALIFORNIA

J.M. TURNER ENGINEERING, INC.
CONSULTING ENGINEERS
1325 COLLEGE AVE., SANTA ROSA, CA. 95404
(707) 528-4503 FAX (707) 528-4505

DATE	REVISED	JOB NO:	SHEET #
6/8/00	3/13/12	13088-1	1 of 1

HURST JAWS OF LIFE® AIRSHORE
711 North Post Rd Shelby, NC 28150
704-487-6961 800-537-2659

Airshore Rescue Tool Column
Tabulated Data for Use

AIRSHORE COLUMN			
LENGTH (Feet) Size (in)	Size (ft)	CAPACITY (Pounds)* COLUMN CAPACITY	EARTH BEARING AREA** (SQR FEET)
21-28	2	85,000	43
26-37	2 to 3	79,000	40
33-49	3 to 4	71,000	36
45-67	4 to 5 1/2	64,000	32
54-84	4 1/2 to 7	53,000	26
63-97	5 to 8	44,000	22
84-132	7 to 11	28,000	14
93-144	8 to 12	22,500	11

* Safety Factor is 2:1

NOTES:

1. Column plates shall be loaded level and square. It may require wood or steel wedges to shim between plate and shoring surface.

2. Column base plates can be set directly on concrete surfaces. If the surface is dirt, bearing pads of steel or timber will be required. See bearing area chart.

3. Loads being shored with the ART Column shall be laterally stable or a lateral stabilization plan shall be developed prior to using the column. In emergency situations a competent person can by observation decide if there is lateral stability, however it should be verified by a registered civil engineer before leaving in place for an extended period of time.

4. All three column struts shall be fixed with two pins, six pins total.

REGISTERED PROFESSIONAL ENGINEER
ADRIANUS J. VERMEULEN
No. 69082
Exp. 6/30/14
CIVIL
STATE OF CALIFORNIA

J.M. TURNER ENGINEERING, INC.
CONSULTING ENGINEERS
1325 COLLEGE AVE., SANTA ROSA, CA 95404
(707) 528-4505 FAX (707) 528-4505

DATE	REVISED	JOB NO:	SHEET #
6/1/2000	3/13/2012	13088-1	1 of 1

HURST JAWS OF LIFE® AIRSHORE
711 North Post Rd Shelby, NC 28150
704-487-6961 800-537-2659

Airshore Rescue Tool Tripod
Tabulated Data for Use

AIRSHORE TRIPOD				
HEIGHT (Feet) Size (in)	Size (ft)	CAPACITY (Pounds)* TRIPOD CAPACITY	EARTH BEARING AREA** (SQR FEET)	MAXIMUM LEG ANGLE Degrees from Vertical
21-28	2	80,000	9	45
26-37	2 to 3	75,000	8	45
33-49	3 to 4	65,000	7	45
45-67	4 to 5 1/2	50,000	6	45
54-84	4 1/2 to 7	40,000	4	45
63-97	5 to 8	37,500	4	45
84-132	7 to 11	26,500	3	45
93-144	8 to 12	25,000	3	45

* Safety Factor is 2:1
** Required Per Leg

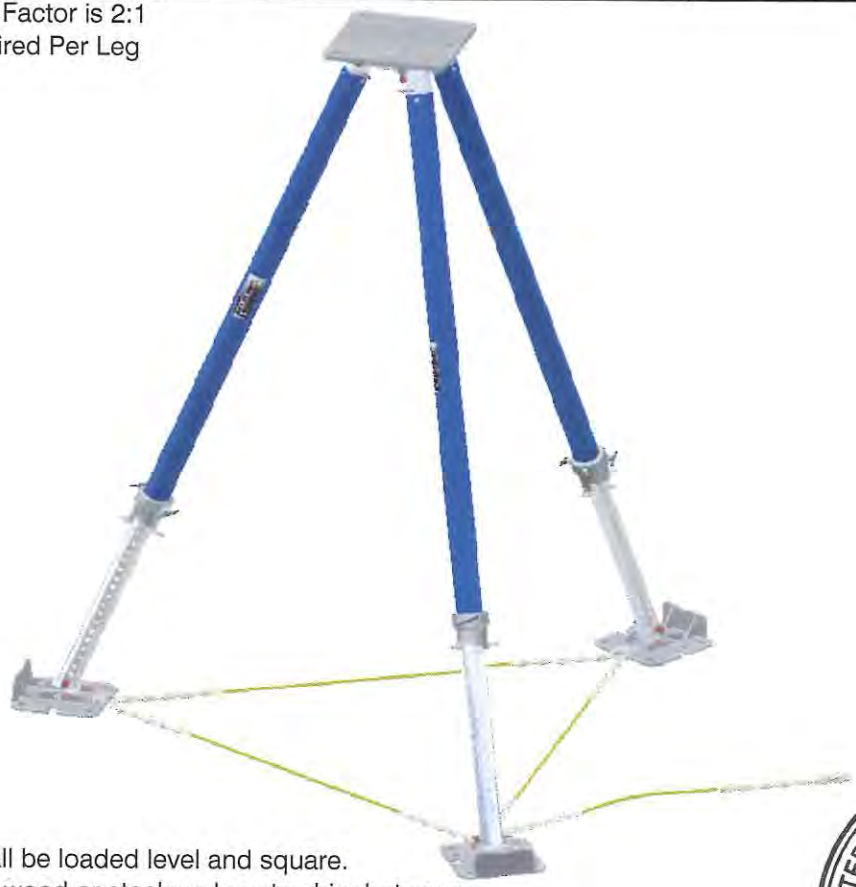

NOTES:
1. Tripod plates shall be loaded level and square. It may require wood or steel wedges to shim between plate and shoring surface.
2. Tripod base plates can be set directly on concrete surfaces. If the surface is dirt, bearing pads of steel or timber will be required. See bearing area chart
3. Tripod base chain and connectors shall be Grade 70 with a minimum safe working load equal to 6600 pounds.
4. A competent person should determine that loads being supported with the ART tripod have lateral stability.
5. Tripod legs are subject to collapse if they are impacted or loaded horizontally. Use caution when working in the vicinity of a loaded tripod.
6. Two pins are required per leg, six pins total.

REGISTERED PROFESSIONAL ENGINEER
ADRIANUS J. VERMEULEN
No. 69082
Exp. 6/30/14
CIVIL
STATE OF CALIFORNIA

J.M. TURNER ENGINEERING, INC.
CONSULTING ENGINEERS
3325 COLLEGE AVE., SANTA ROSA, CA. 95404
(707) 528-4503 FAX (707) 528-4505

DATE	REVISED	JOB NO:	SHEET #
6/1/2004	3/13/2012	13088-1	1 of 1

HURST JAWS OF LIFE® AIRSHORE
711 North Post Rd Shelby, NC 28150
704-487-6961 800-537-2659

Airshore Raker Rail

Tabulated Data for Use

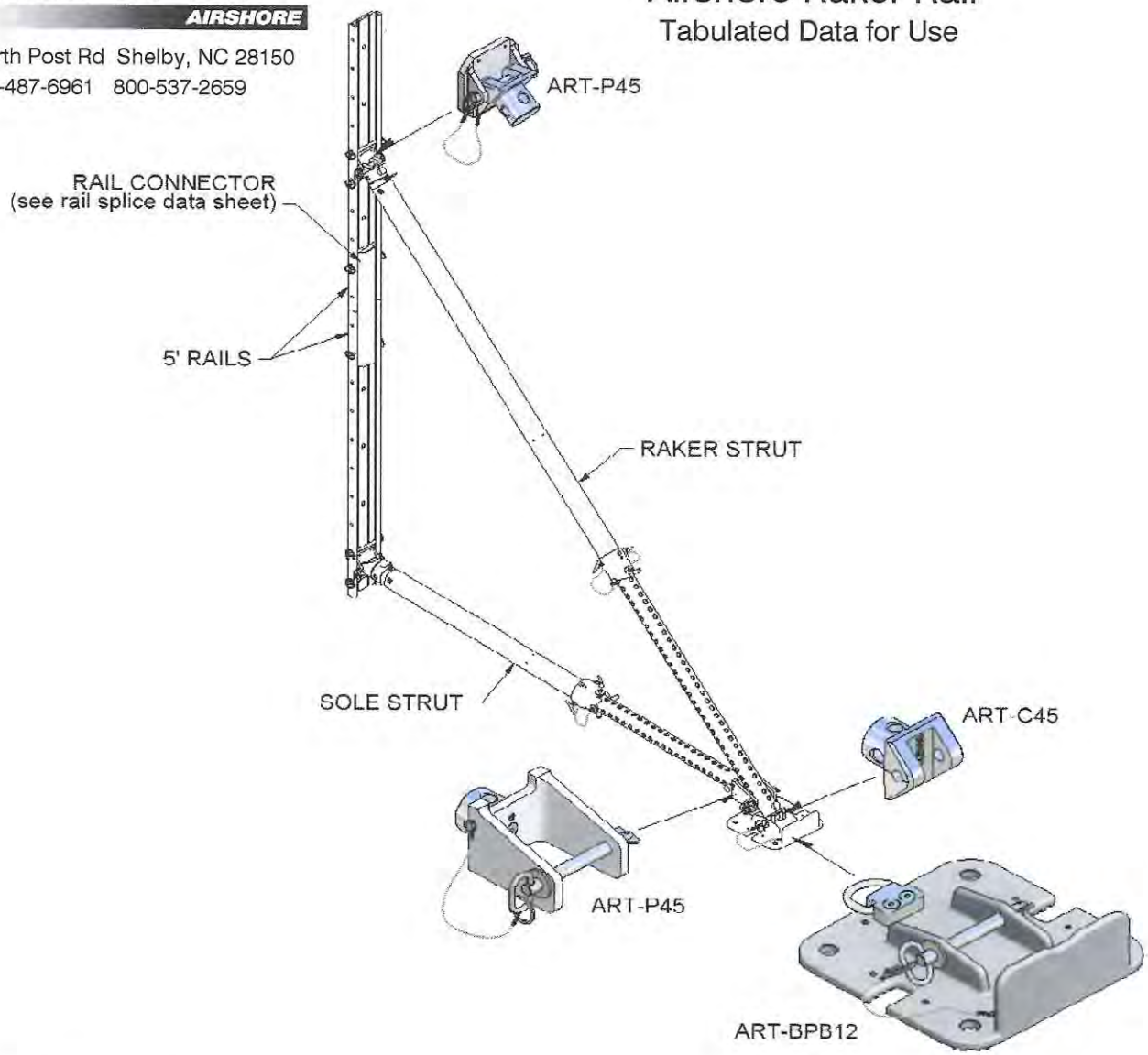

NOTES:

1. Rakers should be placed in pairs as shown above spaced no farther than 8 feet apart. They should be connected to the piece being shored or they should be cross braced using a minimum of 2x6 cross bracing.
2. Airshore raker rail shall be configured so that the angle between the raker strut and the ground does not exceed 60 degrees.
3. Light Duty or Heavy Duty rails may be used.
4. On concrete surfaces use a minimum of 4-5/8" wedge anchors with a minimum of 4" embedment on each base plate.
5. After struts are firmly in place they should be tightened using the standard collar and pins that are provided with the system.
6. This tabulated data is based on "*FEMA National US&R Response System-Technical Working Group report of Airshore International Raker Shore System Testing. 15, Jan 00.*
7. The Airshore Raker System is intended for use in emergency situations. Caution should be used during installation and the installation should be checked by an engineer if they are left in place for any length of time.

REGISTERED PROFESSIONAL ENGINEER
ADRIANUS J. VERMEULEN
No. 69082
Exp. 6/30/14
CIVIL
STATE OF CALIFORNIA

J.M. TURNER ENGINEERING, INC.
CONSULTING ENGINEERS
[illegible] COLLEGE AVE., SANTA ROSA, [illegible] 95404
(707) 528-4504 FAX (707) 528-4505

DATE	REVISED	JOB NO:	SHEET #
6/1/2000	3/13/2012	13088-1	1 of 2

HURST JAWS OF LIFE® AIRSHORE

711 North Post Rd Shelby, NC 28150
704-487-6961 800-537-2659

Airshore Raker Rail

Tabulated Data for Use

ALLOWABLE LATERAL FORCE		
Waler Length (L)	Brace Point (H)	Maximum Lateral Force (LBS)
8 feet	6 feet	12,000 lbs
10 feet	7.5 feet	11,000 lbs
12 feet	9 feet	10,000 lbs
14 feet	10.5 feet	8,500 lbs
16 feet	12 feet	4,200 lbs
Data is for a system of 2 Raker Rails		

Seismic Lateral Force = .3 x Weight	
Concrete Wall Thickness	Force per 100 SF
12 inches	4,500 lbs
8 inches	3,000 lbs
6 inches	2,250 lbs
Based on Seismic Zone 4	

Predicted Lateral Force - Wind		
Wind Speed	Force	Force per 100 SF
100 mph	45 psf	4,5000 lbs
90 mph	35 psf	3,500 lbs
80 mph	30 psf	3,000 lbs

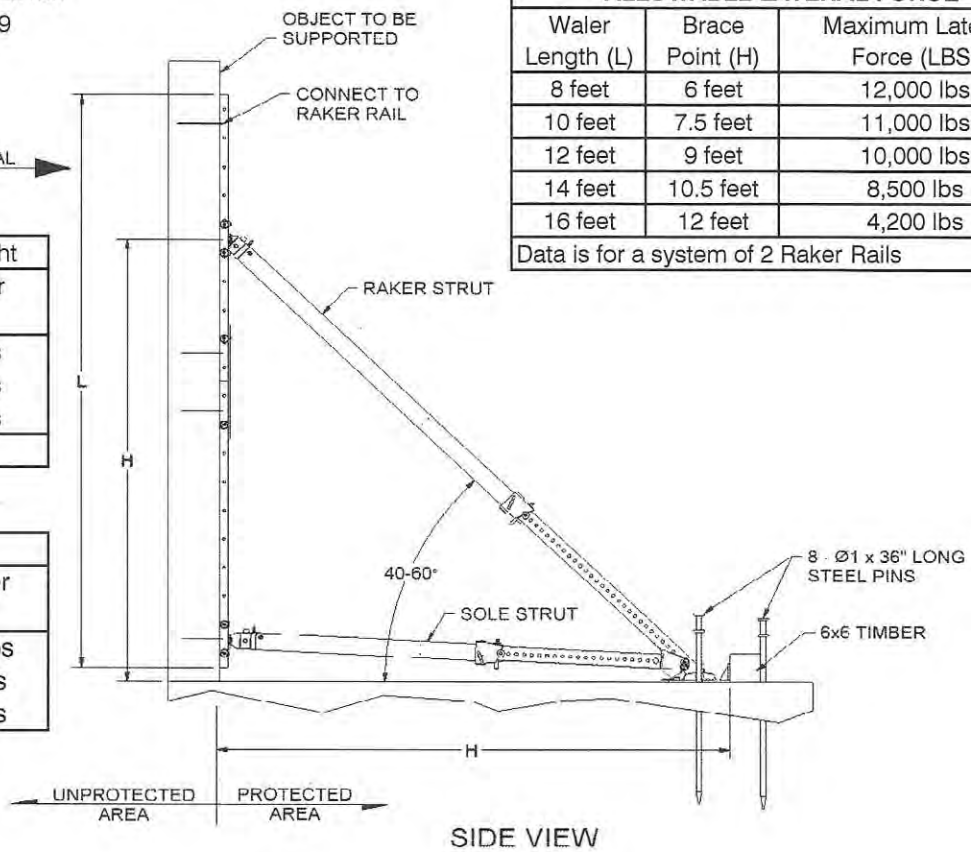

SIDE VIEW

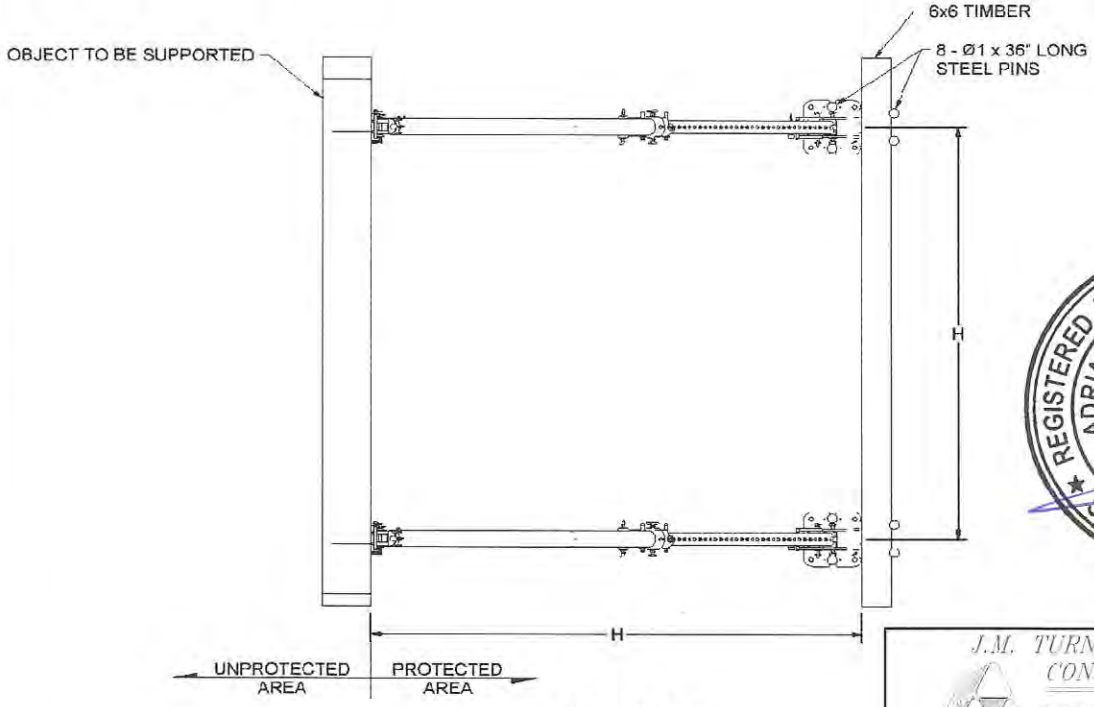

TOP VIEW

REGISTERED PROFESSIONAL ENGINEER
ADRIANUS J. VERMEULEN
No. 69082
Exp. 6/30/14
CIVIL
STATE OF CALIFORNIA

J.M. TURNER ENGINEERING, INC.
CONSULTING ENGINEERS

DATE	REVISED	JOB NO:	SHEET #
6/1/2000	3/13/2012	13088-1	2 of 2

HURST JAWS OF LIFE® AIRSHORE
711 North Post Rd Shelby, NC 28150
704-487-6961 800-537-2659

Airshore Heavy Duty Waler Connection

Tabulated Data for Use

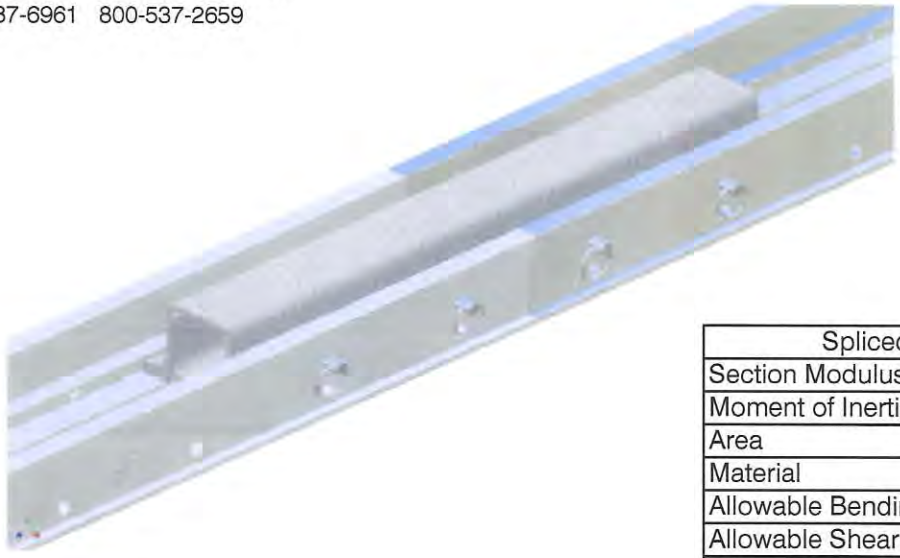

Spliced Waler Connection	
Section Modulus	4 In^3
Moment of Inertia	8.82 In^4
Area	6.11 In^2
Material	T6061 Aluminum
Allowable Bending	7 K-ft
Allowable Shear	3,200 lbs
Allowable Tension	12,000 lbs

NOTES:

1. This waler connection is equivalent or greater in strength to the unspliced waler section.

2. Design is in accordance with "SPECIFICATIONS FOR ALUMINUM STRUCTURES, ALLOWABLE STRESS DESIGN, SIXTH EDITION, OCTOBER 1994".

REGISTERED PROFESSIONAL ENGINEER
ADRIANUS J. VERMEULEN
No. 69082
Exp. 6/30/14
CIVIL
STATE OF CALIFORNIA

J.M. TURNER ENGINEERING, INC.
CONSULTING ENGINEERS
1325 COLLEGE AVE., SANTA ROSA, CA. 95404
(707) 528-4505 FAX (707) 528-4505

DATE	REVISED	JOB NO:	SHEET #
6/8/2000	3/13/2012	13088-1	1 of 1

HURST JAWS OF LIFE® AIRSHORE

711 North Post Rd Shelby, NC 28150
704-487-6961 800-537-2659

Airshore Lite Pod
Tabulated Data for Use

AIRSHORE LITE POD				
HEIGHT (Feet) Size (in)	Size (ft)	CAPACITY (Pounds)* LITEPOD CAPACITY	EARTH BEARING AREA** (SQR FEET)	MAXIMUM LEG ANGLE Degrees from Vertical
82	6'-10"	3,157	0.53	45
87	7'-3"	2,804	0.47	45
92	7'-8"	2,508	0.42	45
97	8'-1"	2,256	0.38	45
102	8'-6"	2,040	0.34	45
107	8'-11"	1,854	0.31	45
112	9'-4"	1,692	0.28	45
117	9'-9"	1,551	0.26	45

* Safety Factor is 2:1

NOTES:

1) Tripod plates shall be loaded level and square. It may require wood or steel wedges to shim between plate and shoring surface.

2) Tripod base plates can be set directly on concrete surfaces. If the surface is dirt, bearing pads of steel or timber will be required. See bearing area chart.

3) Tripod base chain shall be 1/4" Grade 70 Chain with a minimum safe working load equal to 3150 LBS.

4) A competent person should determine that loads being supported with the ART Tripod have lateral stability.

5) Tripod legs are subject to collapse if they are impacted or loaded horizontaly. Use caution

REGISTERED PROFESSIONAL ENGINEER
ADRIANUS J. VERMEULEN
No. 69082
Exp. 6/30/14
CIVIL
STATE OF CALIFORNIA

AIRSHORE LITE POD

J.M. TURNER ENGINEERING, INC.
CONSULTING ENGINEERS

DATE	REVISED	JOB NO:	SHEET #
11/1/2010	3/13/2012	13088-1	1 of 1

Form P/N: 279A054

Airshore Flying Raker Rail Assembly

HURST JAWS OF LIFE® AIRSHORE

711 North Post Rd Shelby, NC 28150
704-487-6961 800-537-2659

Examples For Use of This Tabulated Data:

Wall Bracing Against Wind and Seismic Forces

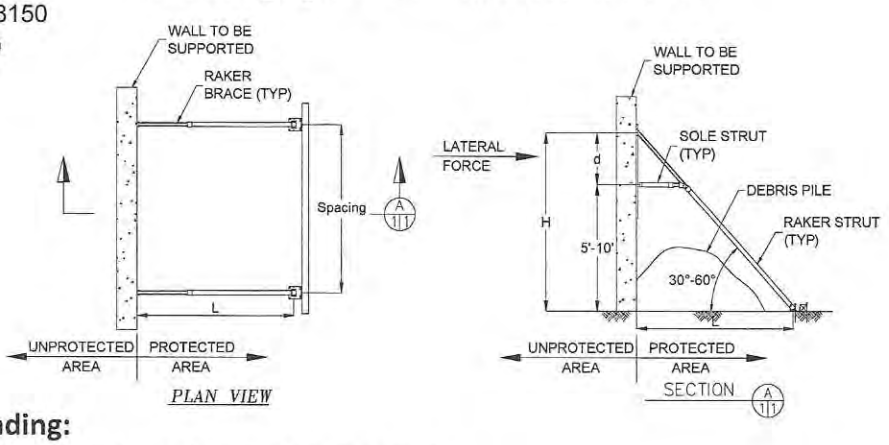

Braced Wall Against Wind Loading:

Example: Use rakers to support a wall that is 12' high. The maximum anticipated wind speed is 50 mph. There is debris against the wall that requires the bottom "Sole Strut" to be at a height of 6' from ground surface.

* Allowable Values Are Bold

Predicted Lateral Force-Wind	
Wind Speed (mph)	Force PSF
40	11.0
50	**17.2**
60	24.7
70	33.6
80	43.9
90	55.6

Table 1

30 degrees				
d (in)	H (ft)	L (ft)	Max Spacing	Max Wall Pressure (psf)
18	**7.5**	**13**	**4**	**25.3**
24	**8**	**14**	**4**	**21.6**
30	**8.5**	**14.75**	**4**	**18.3**
36	9	15.5	4	16.5
42	9.5	16.5	4	14.8
48	10	17.25	4	13.4
54	10.5	18.25	4	12.5
60	11	19	4	11.2

45 degrees				
d (in)	H (ft)	L (ft)	Max Spacing	Max Wall Pressure (psf)
18	**7.5**	**7.5**	**5**	**30.3**
24	**8**	**8**	**5**	**25.1**
30	**8.5**	**8.5**	**5**	**21.8**
36	**9**	**9**	**5**	**18.8**
42	9.5	9.5	5	17.1
48	10	10	5	16.1
54	10.5	10.5	5	14.6
60	11	11	5	13.8

60 degrees				
d (in)	H (ft)	L (ft)	Max Spacing	Max Wall Pressure (psf)
18	**7.5**	**4.25**	**6**	**31.1**
24	**8**	**4.5**	**6**	**25.6**
30	**8.5**	**5**	**6**	**21.8**
36	**9**	**5.25**	**6**	**19.5**
42	**9.5**	**5.5**	**6**	**17.4**
48	10	5.75	6	16.0
54	10.5	6	6	14.6
60	11	6.5	6	13.8

Braced Concrete Wall Against Seismic Loading:

Example: Use rakers to support a wall that is 12' high. The maximum thickness of the concrete wall to be supported is 8". There is debris against the wall that requires the bottom "Sole Strut" to be at a height of 6' from ground surface.

* Allowable Values Are Bold

Seismic Force = 0.3 x Weight	
Concrete Wall Thickness (in)	Force PSF
6	22.5
8	**30.0**
12	45.0

Table 2

45 degrees				
d (in)	H (ft)	L (ft)	Max Spacing	Max Wall Pressure (psf)
18	**7.5**	**7.5**	**5**	**30.3**
24	8	8	5	25.1
30	8.5	8.5	5	21.8
36	9	9	5	18.8
42	9.5	9.5	5	17.1
48	10	10	5	16.1
54	10.5	10.5	5	14.6
60	11	11	5	13.8

60 degrees				
d (in)	H (ft)	L (ft)	Max Spacing	Max Wall Pressure (psf)
18	**7.5**	**4.25**	**6**	**31.1**
24	8	4.5	6	25.6
30	8.5	5	6	21.8
36	9	5.25	6	19.5
42	9.5	5.5	6	17.4
48	10	5.75	6	16.0
54	10.5	6	6	14.6
60	11	6.5	6	13.8

AIRSHORE FLYING RAKER RAIL ASSEMBLY

J.M. TURNER ENGINEERING, INC.
CONSULTING ENGINEERS
1325 COLLEGE AVE., SANTA ROSA, CA. 95404
(707) 528-4503 FAX (707) 528-4505

DATE:	REV DATE:	JOB NO:
10/18/2010	3/13/2012	13088-1

HURST JAWS OF LIFE® AIRSHORE
711 North Post Rd Shelby, NC 28150
704-487-6961 800-537-2659

Airshore Flying Raker Rail Assembly

Notes:

1) Rakers should be connected to the piece being shored or they should be cross braced using a minimum of 2x6 cross bracing.

2) Raker brace shall be configured so that the angle between the raker brace and the ground does not fall below 30 degrees or exceed 60 degrees.

3) Light Duty or Heavy Duty Rails shall be used.

4) Use 1" diameter x 36" long steel pins to anchor base plates to the ground.

5) After braces are firmly in place they should be locked into place using locking mechanism.

6) The Raker Brace System is intended for use in emergency situations. Caution should be used during installation and the installation should be checked by an engineer if they are left in place for any length of time.

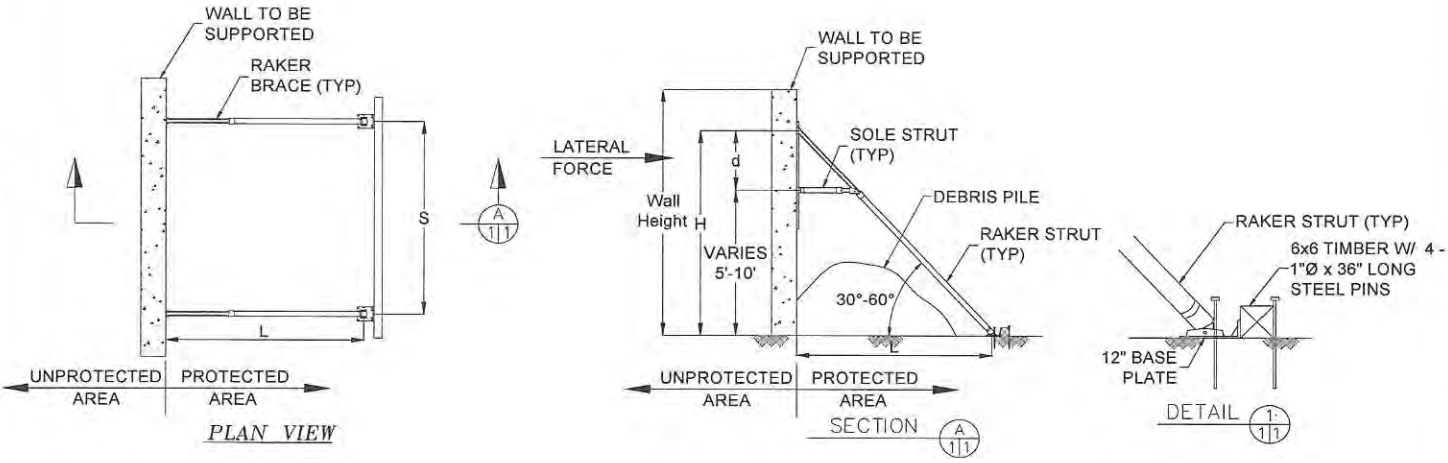

REGISTERED PROFESSIONAL ENGINEER
ADRIANUS J. VERMEULEN
No. 69082
Exp. 6/30/14
CIVIL
STATE OF CALIFORNIA

AIRSHORE FLYING RAKER RAIL ASSEMBLY

J.M. TURNER ENGINEERING, INC.
CONSULTING ENGINEERS
1325 COLLEGE AVE., SANTA ROSA, CA. 95404
(707) 528-4503 FAX (707) 528-4505

DATE:	REV DATE:	JOB NO:
10/18/2010	3/13/2012	13088-1

HURST JAWS OF LIFE® AIRSHORE

711 North Post Rd Shelby, NC 28150
704-487-6961 800-537-2659

Airshore Flying Raker Rail Assembly

Maximum Wall Height = 12 ft

Predicted Lateral Force-Wind	
Wind Speed (mph)	Force PSF
40	11.0
50	17.2
60	24.7
70	33.6
80	43.9
90	55.6

Table 1

Seismic Force = 0.3 x Weight	
Concrete Wall Thickness (in)	Force PSF
6	22.5
8	30.0
12	45.0

Table 2

Maximum Wall Height = 12'
Horizontal Strut Location = 5' From Ground Surface

30 degrees				
d (in)	H (ft)	L (ft)	Max Spacing	Max Wall Pressure (psf)
18	6.5	11.25	4	32.2
24	7	12	4	27.3
30	7.5	13	4	23.7
36	8	14	4	20.6
42	8.5	14.75	4	18.5
48	9	15.5	4	16.5
54	9.5	16.5	4	15.4
60	10	17.25	4	14.3

45 degrees				
d (in)	H (ft)	L (ft)	Max Spacing	Max Wall Pressure (psf)
18	6.5	6.5	5	37.6
24	7	7	5	30.9
30	7.5	7.5	5	26.6
36	8	8	5	23.4
42	8.5	8.5	5	21.3
48	9	9	5	19.3
54	9.5	9.5	5	18.0
60	10	10	5	16.9

60 degrees				
d (in)	H (ft)	L (ft)	Max Spacing	Max Wall Pressure (psf)
18	6.5	3.75	6	37.0
24	7	4	6	30.0
30	7.5	4.25	6	26.1
36	8	4.5	6	23.1
42	8.5	5	6	20.5
48	9	5.25	6	19.2
54	9.5	5.5	6	18.0
60	10	5.75	6	16.9

Instructions For Use of Tabulted Data:

For Applications to Resist Wind Loads:

1) Determine the maximum anticipated wind speed. The corresponding wind force can be found in Table 1.
2) Determine the required clearance from ground surface to the bottom "Sole Strut" for debris and/or other items.
3) Choose the strut orientation and spacing to be used from the tables labeled "30 degrees", "45 degrees", and "60 degrees". The required wall pressure from Table 1 must be less than the max wall pressure specified for the chosen strut orientation.

For Applications to Resist Other Lateral Loads:

1) Determine the maximum lateral pressure that will be exerted on the wall to be supported.
2) Determine the required clearance from ground surface to the bottom "Sole Strut" for debris and/or other items.
3) Choose the strut orientation and spacing to be used from the tables labeled "30 degrees", "45 degrees", and "60 degrees". The required wall pressure from Table 1 must be less than the max wall pressure specified for the chosen strut orientation.

For Applications to Resist Seismic Loads on Concrete Walls:

1) Determine the maximum wall thickness. The corresponding seismic force can be found in Table 2.
2) Determine the required clearance from ground surface to the bottom "Sole Strut" for debris and/or other items.
3) Choose the strut orientation and spacing to be used from the tables labeled "30 degrees", "45 degrees", and "60 degrees". The required wall pressure from Table 1 must be less than the max wall pressure specified for the chosen strut orientation.

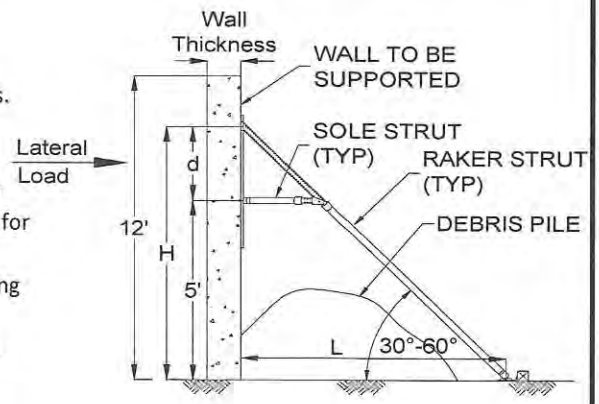

REGISTERED PROFESSIONAL ENGINEER
ADRIANUS J. VERMEULEN
No. 69082
Exp. 6/30/14
CIVIL
STATE OF CALIFORNIA

AIRSHORE FLYING RAKER RAIL ASSEMBLY

J.M. TURNER ENGINEERING, INC.
CONSULTING ENGINEERS
1325 COLLEGE AVE., SANTA ROSA, CA. 95404
(707) 528-4503 FAX (707) 528-4505

DATE:	REV DATE:	JOB NO:
10/18/2010	3/13/2012	13088-1

711 North Post Rd Shelby, NC 28150
704-487-6961 800-537-2659

Maximum Wall Height = 13 ft

Predicted Lateral Force-Wind	
Wind Speed (mph)	Force PSF
40	11.0
50	17.2
60	24.7
70	33.6
80	43.9
90	55.6

Table 1

Seismic Force = 0.3 x Weight	
Concrete Wall Thickness (in)	Force PSF
6	22.5
8	30.0
12	45.0

Table 2

Maximum Wall Height = 13'
Horizontal Strut Location = 6' From Ground Surface

30 degrees				
d (in)	H (ft)	L (ft)	Max Spacing	Max Wall Pressure (psf)
18	7.5	13	4	25.3
24	8	14	4	21.6
30	8.5	14.75	4	18.3
36	9	15.5	4	16.5
42	9.5	16.5	4	14.8
48	10	17.25	4	13.4
54	10.5	18.25	4	12.5
60	11	19	4	11.2

45 degrees				
d (in)	H (ft)	L (ft)	Max Spacing	Max Wall Pressure (psf)
18	7.5	7.5	5	30.3
24	8	8	5	25.1
30	8.5	8.5	5	21.8
36	9	9	5	18.8
42	9.5	9.5	5	17.1
48	10	10	5	16.1
54	10.5	10.5	5	14.6
60	11	11	5	13.8

60 degrees				
d (in)	H (ft)	L (ft)	Max Spacing	Max Wall Pressure (psf)
18	7.5	4.25	6	31.1
24	8	4.5	6	25.6
30	8.5	5	6	21.8
36	9	5.25	6	19.5
42	9.5	5.5	6	17.4
48	10	5.75	6	16.0
54	10.5	6	6	14.6
60	11	6.5	6	13.8

Instructions For Use of Tabulted Data:

For Applications to Resist Wind Loads:

1) Determine the maximum anticipated wind speed. The corresponding wind force can be found in Table 1.
2) Determine the required clearance from ground surface to the bottom "Sole Strut" for debris and/or other items.
3) Choose the strut orientation and spacing to be used from the tables labeled "30 degrees", "45 degrees", and "60 degrees". The required wall pressure from Table 1 must be less than the max wall pressure specified for the chosen strut orientation.

For Applications to Resist Seismic Loads on Concrete Walls:

1) Determine the maximum wall thickness. The corresponding seismic force can be found in Table 2.
2) Determine the required clearance from ground surface to the bottom "Sole Strut" for debris and/or other items.
3) Choose the strut orientation and spacing to be used from the tables labeled "30 degrees", "45 degrees", and "60 degrees". The required wall pressure from Table 1 must be less than the max wall pressure specified for the chosen strut orientation.

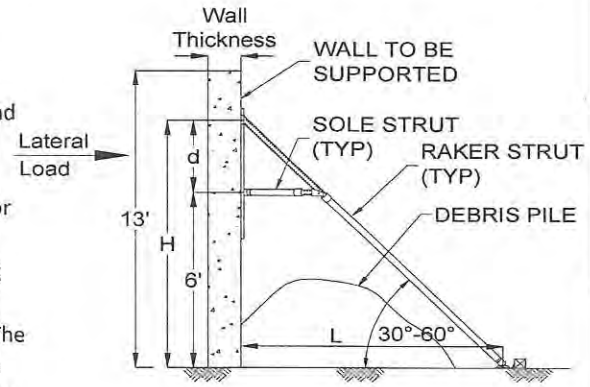

For Applications to Resist Other Lateral Loads:

1) Determine the maximum lateral pressure that will be exerted on the wall to be supported.
2) Determine the required clearance from ground surface to the bottom "Sole Strut" for debris and/or other items.
3) Choose the strut orientation and spacing to be used from the tables labeled "30 degrees", "45 degrees", and "60 degrees". The required wall pressure from Table 1 must be less than the max wall pressure specified for the chosen strut orientation.

REGISTERED PROFESSIONAL ENGINEER
ADRIANUS J. VERMEULEN
No. 69082
Exp. 6/30/14
CIVIL
STATE OF CALIFORNIA

AIRSHORE FLYING
RAKER RAIL ASSEMBLY

J.M. TURNER ENGINEERING, INC.
CONSULTING ENGINEERS
1325 COLLEGE AVE., SANTA ROSA, CA. 95404
(707) 528-4503 FAX (707) 528-4505

DATE:	REV DATE:	JOB NO:
10/18/2010	3/13/2012	13088-1

HURST JAWS OF LIFE® AIRSHORE

711 North Post Rd Shelby, NC 28150
704-487-6961 800-537-2659

Airshore Flying Raker Rail Assembly

Maximum Wall Height = 14 ft

Predicted Lateral Force-Wind	
Wind Speed (mph)	Force PSF
30	6.2
40	11.0
50	17.2
60	24.7
70	33.6
80	43.9

Table 1

Seismic Force = 0.3 x Weight	
Concrete Wall Thickness (in)	Force PSF
6	22.5
8	30.0
12	45.0

Table 2

Maximum Wall Height = 14'
Horizontal Strut Location = 7' From Ground Surface

30 degrees				
d (in)	H (ft)	L (ft)	Max Spacing	Max Wall Pressure (psf)
18	8.5	14.75	4	19.8
24	9	15.5	4	17.0
30	9.5	16.5	4	14.9
36	10	17.25	4	13.0
42	10.5	18.25	4	11.8
48	11	19	4	11.0
54	11.5	20	4	9.9
60	12	20.75	4	9.3

45 degrees				
d (in)	H (ft)	L (ft)	Max Spacing	Max Wall Pressure (psf)
18	8.5	8.5	5	25.1
24	9	9	5	20.9
30	9.5	9.5	5	18.2
36	10	10	5	16.3
42	10.5	10.5	5	14.5
48	11	11	5	13.3
54	11.5	11.5	5	12.1
60	12	12	5	11.4

60 degrees				
d (in)	H (ft)	L (ft)	Max Spacing	Max Wall Pressure (psf)
18	8.5	5	6	26.8
24	9	5.25	6	21.8
30	9.5	5.5	6	18.7
36	10	5.75	6	16.4
42	10.5	6	6	14.7
48	11	6.5	6	13.6
54	11.5	6.5	6	12.5
60	12	7	6	11.8

Instructions For Use of Tabulted Data:

For Applications to Resist Wind Loads:

1) Determine the maximum anticipated wind speed. The corresponding wind force can be found in Table 1.
2) Determine the required clearance from ground surface to the bottom "Sole Strut" for debris and/or other items.
3) Choose the strut orientation and spacing to be used from the tables labeled "30 degrees", "45 degrees", and "60 degrees". The required wall pressure from Table 1 must be less than the max wall pressure specified for the chosen strut orientation.

For Applications to Resist Seismic Loads on Concrete Walls:

1) Determine the maximum wall thickness. The corresponding seismic force can be found in Table 2.
2) Determine the required clearance from ground surface to the bottom "Sole Strut" for debris and/or other items.
3) Choose the strut orientation and spacing to be used from the tables labeled "30 degrees", "45 degrees", and "60 degrees". The required wall pressure from Table 1 must be less than the max wall pressure specified for the chosen strut orientation.

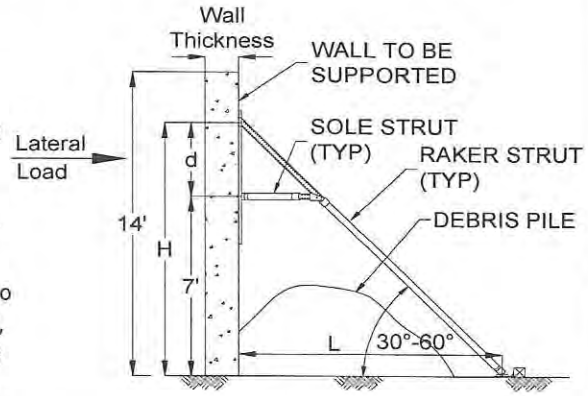

For Applications to Resist Other Lateral Loads:

1) Determine the maximum lateral pressure that will be exerted on the wall to be supported.
2) Determine the required clearance from ground surface to the bottom "Sole Strut" for debris and/or other items.
3) Choose the strut orientation and spacing to be used from the tables labeled "30 degrees", "45 degrees", and "60 degrees". The required wall pressure from Table 1 must be less than the max wall pressure specified for the chosen strut orientation.

REGISTERED PROFESSIONAL ENGINEER
ADRIANUS J. VERMEULEN
No. 69082
Exp. 6/30/14
CIVIL
STATE OF CALIFORNIA

AIRSHORE FLYING
RAKER RAIL ASSEMBLY

J.M. TURNER ENGINEERING, INC.
CONSULTING ENGINEERS
1325 COLLEGE AVE., SANTA ROSA, CA. 95404
(707) 528-4503 FAX (707) 528-4505

DATE:	REV DATE:	JOB NO:
10/18/2010	3/13/2012	13088-1

HURST JAWS OF LIFE® AIRSHORE
711 North Post Rd Shelby, NC 28150
704-487-6961 800-537-2659

Maximum Wall Height = 16 ft

Predicted Lateral Force-Wind	
Wind Speed (mph)	Force PSF
20	2.7
30	6.2
40	11.0
50	17.2
60	24.7
70	33.6

Table 1

Seismic Force = 0.3 x Weight	
Concrete Wall Thickness (in)	Force PSF
6	22.5
8	30.0
12	45.0

Table 2

Maximum Wall Height = 16'
Horizontal Strut Location = 8' From Ground Surface

30 degrees				
d (in)	H (ft)	L (ft)	Max Spacing	Max Wall Pressure (psf)
18	9.5	16.50	4	14.9
24	10	17.25	4	12.8
30	10.5	18.25	4	11.2
36	11	19.00	4	10.2
42	11.5	20.00	4	9.2
48	12	20.75	4	8.4
54	12.5	21.75	4	7.8
60	13	22.50	4	7.4

45 degrees				
d (in)	H (ft)	L (ft)	Max Spacing	Max Wall Pressure (psf)
18	9.5	9.5	5	19.9
24	10	10	5	16.7
30	10.5	10.5	5	14.2
36	11	11	5	12.7
42	11.5	11.5	5	11.7
48	12	12	5	10.4
54	12.5	12.5	5	9.9
60	13	13	5	9.0

60 degrees				
d (in)	H (ft)	L (ft)	Max Spacing	Max Wall Pressure (psf)
18	9.5	5.50	6	21.7
24	10	5.75	6	17.7
30	10.5	6.00	6	15.3
36	11	6.50	6	13.5
42	11.5	6.50	6	12.2
48	12	7.00	6	11.0
54	12.5	7.25	6	10.1
60	13	7.50	6	9.6

Instructions For Use of Tabulted Data:

For Applications to Resist Wind Loads:

1) Determine the maximum anticipated wind speed. The corresponding wind force can be found in Table 1.
2) Determine the required clearance from ground surface to the bottom "Sole Strut" for debris and/or other items.
3) Choose the strut orientation and spacing to be used from the tables labeled "30 degrees", "45 degrees", and "60 degrees". The required wall pressure from Table 1 must be less than the max wall pressure specified for the chosen strut orientation.

For Applications to Resist Seismic Loads on Concrete Walls:

1) Determine the maximum wall thickness. The corresponding seismic force can be found in Table 2.
2) Determine the required clearance from ground surface to the bottom "Sole Strut" for debris and/or other items.
3) Choose the strut orientation and spacing to be used from the tables labeled "30 degrees", "45 degrees", and "60 degrees". The required wall pressure from Table 1 must be less than the max wall pressure specified for the chosen strut orientation.

For Applications to Resist Other Lateral Loads:

1) Determine the maximum lateral pressure that will be exerted on the wall to be supported.
2) Determine the required clearance from ground surface to the bottom "Sole Strut" for debris and/or other items.
3) Choose the strut orientation and spacing to be used from the tables labeled "30 degrees", "45 degrees", and "60 degrees". The required wall pressure from Table 1 must be less than the max wall pressure specified for the chosen strut orientation.

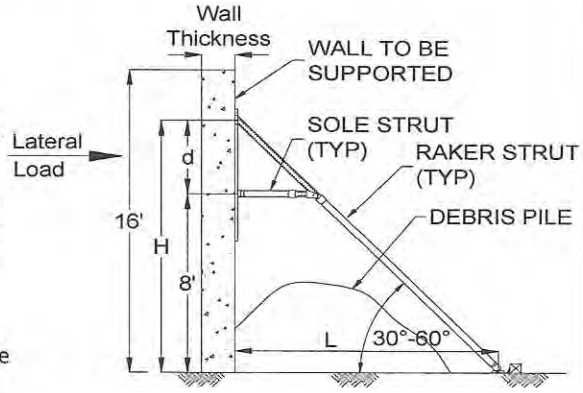

REGISTERED PROFESSIONAL ENGINEER
ADRIANUS J. VERMEULEN
No. 69082
Exp. 6/30/14
CIVIL
STATE OF CALIFORNIA

AIRSHORE FLYING RAKER RAIL ASSEMBLY

J.M. TURNER ENGINEERING, INC.
CONSULTING ENGINEERS
1325 COLLEGE AVE., SANTA ROSA, CA. 95404
(707) 528-4503 FAX (707) 528-4505

DATE:	REV DATE:	JOB NO:
10/18/2010	3/13/2012	13088-1

Airshore Flying Raker Rail Assembly

HURST JAWS OF LIFE® AIRSHORE
711 North Post Rd Shelby, NC 28150
704-487-6961 800-537-2659

Maximum Wall Height = 18 ft

Predicted Lateral Force-Wind	
Wind Speed (mph)	Force PSF
20	2.7
30	6.2
40	11.0
50	17.2
60	24.7
70	33.6

Table 1

Seismic Force = 0.3 x Weight	
Concrete Wall Thickness (in)	Force PSF
6	22.5
8	30.0
12	45.0

Table 2

Maximum Wall Height = 18'
Horizontal Strut Location = 9' From Ground Surface

30 degrees				
d (in)	H (ft)	L (ft)	Max Spacing	Max Wall Pressure (psf)
18	10.5	18.25	4	11.5
24	11	19.00	4	9.9
30	11.5	20.00	4	9.0
36	12	20.75	4	7.9
42	12.5	21.75	4	7.2
48	13	22.50	4	6.8
54	13.5	23.50	4	6.1
60	14	24.25	4	5.7

45 degrees				
d (in)	H (ft)	L (ft)	Max Spacing	Max Wall Pressure (psf)
18	10.5	10.5	5	15.9
24	11	11	5	13.4
30	11.5	11.5	5	11.7
36	12	12	5	10.5
42	12.5	12.5	5	9.5
48	13	13	5	8.7
54	13.5	13.5	5	8.0
60	14	14	5	7.3

60 degrees				
d (in)	H (ft)	L (ft)	Max Spacing	Max Wall Pressure (psf)
18	10.5	6.00	6	18.0
24	11	6.50	6	14.8
30	11.5	6.50	6	12.6
36	12	7.00	6	11.2
42	12.5	7.25	6	10.1
48	13	7.50	6	9.1
54	13.5	7.75	6	8.4
60	14	8.00	6	8.0

Instructions For Use of Tabulted Data:

For Applications to Resist Wind Loads:

1) Determine the maximum anticipated wind speed. The corresponding wind force can be found in Table 1.
2) Determine the required clearance from ground surface to the bottom "Sole Strut" for debris and/or other items.
3) Choose the strut orientation and spacing to be used from the tables labeled "30 degrees", "45 degrees", and "60 degrees". The required wall pressure from Table 1 must be less than the max wall pressure specified for the chosen strut orientation.

For Applications to Resist Seismic Loads on Concrete Walls:

1) Determine the maximum wall thickness. The corresponding seismic force can be found in Table 2.
2) Determine the required clearance from ground surface to the bottom "Sole Strut" for debris and/or other items.
3) Choose the strut orientation and spacing to be used from the tables labeled "30 degrees", "45 degrees", and "60 degrees". The required wall pressure from Table 1 must be less than the max wall pressure specified for the chosen strut orientation.

For Applications to Resist Other Lateral Loads:

1) Determine the maximum lateral pressure that will be exerted on the wall to be supported.
2) Determine the required clearance from ground surface to the bottom "Sole Strut" for debris and/or other items.
3) Choose the strut orientation and spacing to be used from the tables labeled "30 degrees", "45 degrees", and "60 degrees". The required wall pressure from Table 1 must be less than the max wall pressure specified for the chosen strut orientation.

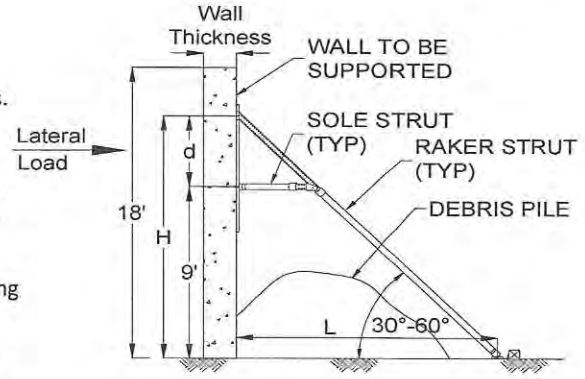

AIRSHORE FLYING RAKER RAIL ASSEMBLY

J.M. TURNER ENGINEERING, INC.
CONSULTING ENGINEERS
1325 COLLEGE AVE., SANTA ROSA, CA. 95404
(707) 528-4503 FAX (707) 528-4505

DATE:	REV DATE:	JOB NO:
10/18/2010	3/13/2012	13088-1

Airshore Flying Raker Rail Assembly

HURST JAWS OF LIFE® AIRSHORE
711 North Post Rd Shelby, NC 28150
704-487-6961 800-537-2659

Maximum Wall Height = 20 ft

Predicted Lateral Force-Wind	
Wind Speed (mph)	Force PSF
20	2.7
30	6.2
40	11.0
50	17.2
60	24.7
70	33.6

Table 1

Seismic Force = 0.3 x Weight	
Concrete Wall Thickness (in)	Force PSF
6	22.5
8	30.0
12	45.0

Table 2

Maximum Wall Height = 20'
Horizontal Strut Location = 10' From Ground Surface

30 degrees				
d (in)	H (ft)	L (ft)	Max Spacing	Max Wall Pressure (psf)
18	11.5	20.00	4	9.1
24	12	20.75	4	7.8
30	12.5	21.75	4	7.1
36	13	22.50	4	6.5
42	13.5	23.50	4	5.9
48	14	24.25	4	5.4
54	14.5	25.00	4	5.0
60	15	26.00	4	4.7

45 degrees				
d (in)	H (ft)	L (ft)	Max Spacing	Max Wall Pressure (psf)
18	11.5	11.5	5	13.0
24	12	12	5	10.9
30	12.5	12.5	5	9.6
36	13	13	5	8.7
42	13.5	13.5	5	7.8
48	14	14	5	7.2
54	14.5	14.5	5	6.6
60	15	15	5	6.1

60 degrees				
d (in)	H (ft)	L (ft)	Max Spacing	Max Wall Pressure (psf)
18	11.5	6.50	6	15.0
24	12	7.00	6	12.4
30	12.5	7.25	6	10.8
36	13	7.50	6	9.4
42	13.5	7.75	6	8.5
48	14	8.00	6	7.7
54	14.5	8.50	6	7.2
60	15	8.75	6	6.6

Instructions For Use of Tabulted Data:

For Applications to Resist Wind Loads:

1) Determine the maximum anticipated wind speed. The corresponding wind force can be found in Table 1.
2) Determine the required clearance from ground surface to the bottom "Sole Strut" for debris and/or other items.
3) Choose the strut orientation and spacing to be used from the tables labeled "30 degrees", "45 degrees", and "60 degrees". The required wall pressure from Table 1 must be less than the max wall pressure specified for the chosen strut orientation.

For Applications to Resist Seismic Loads on Concrete Walls:

1) Determine the maximum wall thickness. The corresponding seismic force can be found in Table 2.
2) Determine the required clearance from ground surface to the bottom "Sole Strut" for debris and/or other items.
3) Choose the strut orientation and spacing to be used from the tables labeled "30 degrees", "45 degrees", and "60 degrees". The required wall pressure from Table 1 must be less than the max wall pressure specified for the chosen strut orientation.

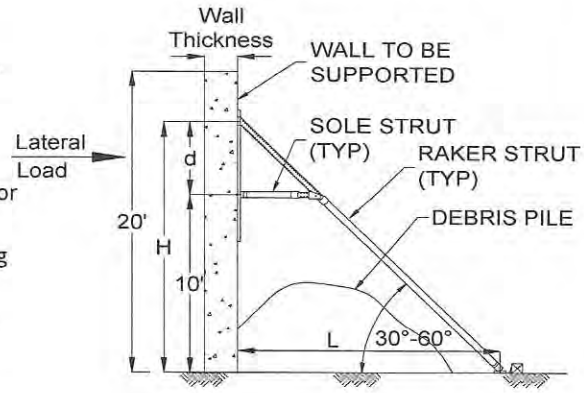

For Applications to Resist Other Lateral Loads:

1) Determine the maximum lateral pressure that will be exerted on the wall to be supported.
2) Determine the required clearance from ground surface to the bottom "Sole Strut" for debris and/or other items.
3) Choose the strut orientation and spacing to be used from the tables labeled "30 degrees", "45 degrees", and "60 degrees". The required wall pressure from Table 1 must be less than the max wall pressure specified for the chosen strut orientation.

REGISTERED PROFESSIONAL ENGINEER
ADRIANUS J. VERMEULEN
No. 69082
Exp. 6/30/14
CIVIL
STATE OF CALIFORNIA

AIRSHORE FLYING RAKER RAIL ASSEMBLY

J.M. TURNER ENGINEERING, INC.
CONSULTING ENGINEERS
1325 COLLEGE AVE., SANTA ROSA, CA. 95404
(707) 528-4503 FAX (707) 528-4505

DATE:	REV DATE:	JOB NO:
10/18/2010	3/13/2012	13088-1

Airshore Raker Rail Assembly With Midpoint Bracing

HURST JAWS OF LIFE® AIRSHORE

711 North Post Rd Shelby, NC 28150
704-487-6961 800-537-2659

Examples For Use of This Tabulated Data:
Wall Bracing Against Wind and Seismic Forces

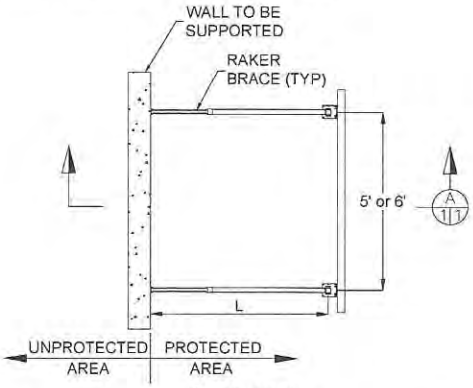

PLAN VIEW

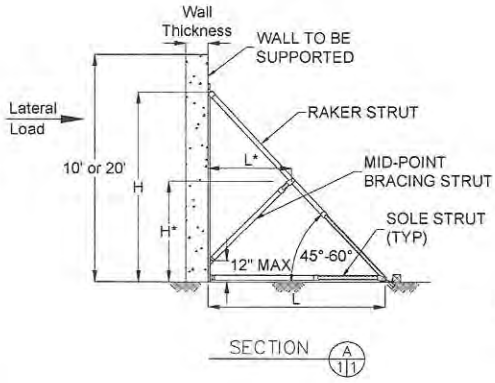

SECTION

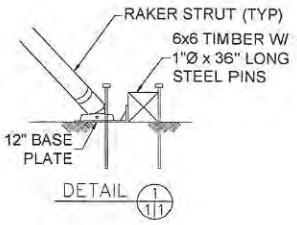

DETAIL

Braced Wall Against Wind Loading:

Example: Use rakers spaced at 6' max to support a wall that is 20' high'. The maximum anticipated wind speed is 80 mph. The raker strut shall be at a 45 degree angle.

* Allowable Values Are Bold

Predicted Lateral Force-Wind		45 Degree Brace Strut						60 Degree Brace Strut					
Wind Speed (mph)	Force PSF	Raker Strut Dimensions: (ft) H	L	H*	L*	Allowable Lateral Force (lbs)	Allowable Wall Pressure (psf)	Raker Strut Dimensions: (ft) H	L	H*	L*	Maximum Lateral Force (lbs)	Allowable Wall Pressure (psf)
50	17.2	**6**	**6**	**3.5**	**2.5**	**18151**	**107**	**6**	**6**	**4.17**	**1.83**	**13068**	**54**
60	24.7	**7**	**7**	**4**	**3**	**14202**	**84**	7	7	4.80	2.20	9847	41
70	33.6	**8**	**8**	**4.5**	**3.5**	**11221**	**66**	8	8	5.44	2.56	7684	32
80	**43.9**	**9**	**9**	**5**	**4**	**9089**	**54**	9	9	6.07	2.93	6164	26
90	55.6	**10**	**10**	**5.5**	**4.5**	**7512**	**44**	10	10	6.71	3.29	5053	21
100	68.6	11	11	6	5	6312	37	11	11	7.34	3.66	4218	18
		12	12	6.5	5.5	5378	32	12	12	7.97	4.03	3574	15

Table 1

Braced Concrete Wall Against Seismic Loading:

Example: Use rakers spaced at 6' max to support a wall that is 20' high'. The maximum thickness of the concrete wall to be supported is 12". The raker strut shall be at a 45 degree angle.

Seismic Force = 0.3 x Weight	
Concrete Wall Thickness (in)	Force PSF
6	22.5
8	30.0
12	**45.0**

Table 2

45 Degree Brace Strut					
Raker Strut Dimensions: (ft) H	L	H*	L*	Allowable Lateral Force (lbs)	Allowable Wall Pressure (psf)
6	**6**	**3.5**	**2.5**	**18151**	**107**
7	**7**	**4**	**3**	**14202**	**84**
8	**8**	**4.5**	**3.5**	**11221**	**66**
9	**9**	**5**	**4**	**9089**	**54**
10	10	5.5	4.5	7512	44
11	11	6	5	6312	37
12	12	6.5	5.5	5378	32

60 Degree Brace Strut					
Raker Strut Dimensions: (ft) H	L	H*	L*	Maximum Lateral Force (lbs)	Allowable Wall Pressure (psf)
6	**6**	**4.17**	**1.83**	**13068**	**54**
7	7	4.80	2.20	9847	41
8	8	5.44	2.56	7684	32
9	9	6.07	2.93	6164	26
10	10	6.71	3.29	5053	21
11	11	7.34	3.66	4218	18
12	12	7.97	4.03	3574	15

* Allowable Values Are Bold

AIRSHORE RAKER RAIL ASSEMBLY WITH MIDPOINT BRACING

J.M. TURNER ENGINEERING, INC.
CONSULTING ENGINEERS
1325 COLLEGE AVE., SANTA ROSA, CA. 95404
(707) 528-4503 FAX (707) 528-4505

DATE:	REV DATE:	JOB NO:
3/10/2011	3/13/2012	13088-1

HURST JAWS OF LIFE® AIRSHORE
711 North Post Rd Shelby, NC 28150
704-487-6961 800-537-2659

Airshore Raker Rail Assembly With Midpoint Bracing

Notes:

1) Rakers should be connected to the piece being shored or they should be cross braced using a minimum of 2x6 cross bracing.

2) Raker struts and mid-point braces shall be configured so that the angle between them and the ground is at 45 degrees or 60 degrees. See diagrams below.

3) Light Duty or Heavy Duty Rails shall be used.

4) Use 1" diameter x 36" long steel pins to anchor base plates to the ground.

5) After braces are firmly in place they should be locked into place using locking mechanism.

6) The Raker Brace System is intended for use in emergency situations. Caution should be used during installation and the installation should be checked by an engineer if they are left in place for any length of time.

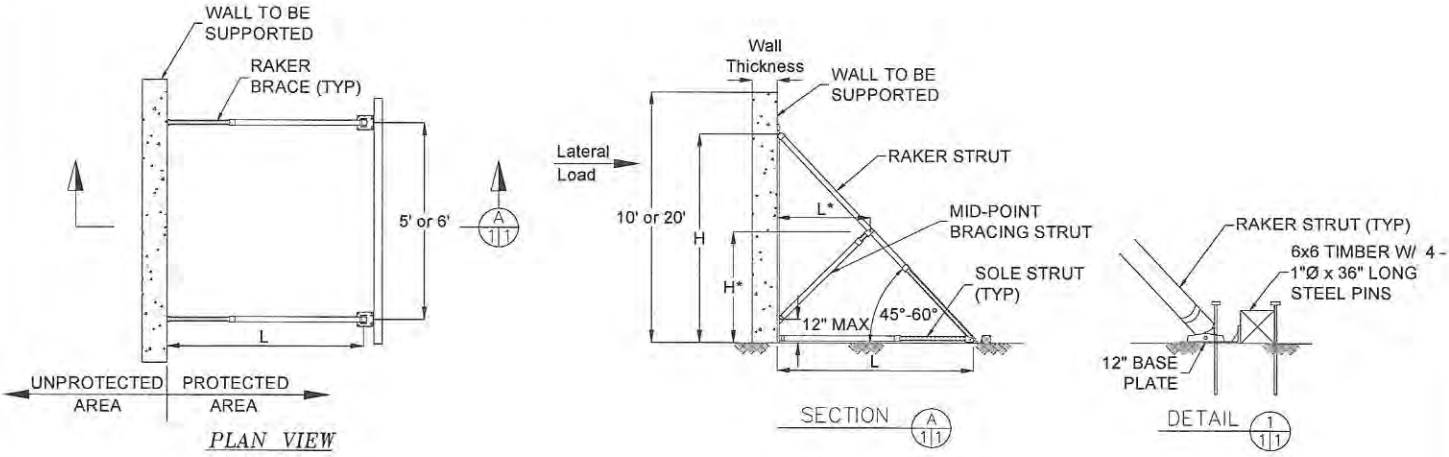

REGISTERED PROFESSIONAL ENGINEER
ADRIANUS J. VERMEULEN
No. 69082
Exp. 6/30/14
CIVIL
STATE OF CALIFORNIA

AIRSHORE RAKER RAIL ASSEMBLY WITH MIDPOINT BRACING

J.M. TURNER ENGINEERING, INC.
CONSULTING ENGINEERS
1325 COLLEGE AVE., SANTA ROSA, CA. 95404
(707) 528-4503 FAX (707) 528-4505

DATE:	REV DATE:	JOB NO:
3/10/2011	3/13/2012	13088-1

Airshore Raker Rail Assembly With Midpoint Bracing

HURST JAWS OF LIFE® AIRSHORE

711 North Post Rd Shelby, NC 28150
704-487-6961 800-537-2659

Predicted Lateral Force-Wind	
Wind Speed (mph)	Force PSF
50	17.2
60	24.7
70	33.6
80	43.9
90	55.6
100	68.6

Table 1

Seismic Force = 0.3 x Weight	
Concrete Wall Thickness (in)	Force PSF
6	22.5
8	30.0
12	45.0

Table 2

45 Degree Raker Strut
Maximum Wall Height = 10 ft
Maximum Raker Spacing = 5 ft

45 Degree Brace Strut					
Raker Strut Dimensions: (ft)				Allowable Lateral Force (lbs)	Allowable Wall Pressure (psf)
H	L	H*	L*		
6	6	3.5	2.5	18151	257
7	7	4	3	14202	201
8	8	4.5	3.5	11221	159
9	9	5	4	9089	129
10	10	5.5	4.5	7512	106
11	11	6	5	6312	89
12	12	6.5	5.5	5378	76

60 Degree Brace Strut					
Raker Strut Dimensions: (ft)				Allowable Lateral Force (lbs)	Allowable Wall Pressure (psf)
H	L	H*	L*		
6	6	4.17	1.83	13068	131
7	7	4.80	2.20	9847	98
8	8	5.44	2.56	7684	77
9	9	6.07	2.93	6164	62
10	10	6.71	3.29	5053	51
11	11	7.34	3.66	4218	42
12	12	7.97	4.03	3574	36

Instructions For Use of Tabulated Data:

For Applications to Resist Wind Loads:

1) Determine the maximum anticipated wind speed. The corresponding wind force can be found in Table 1.

2) Choose the strut and mid-point brace orientation to be used from the tables labeled "45 Degree Brace Strut" and "60 Degree Brace Strut". The required wall pressure from Table 1 must be less than the max wall pressure specified for the chosen strut and brace orientations.

For Applications to Resist Seismic Loads on Concrete Walls:

1) Determine the maximum wall thickness. The corresponding seismic force can be found in Table 2.

2) Choose the strut and mid-point brace orientation to be used from the tables labeled "45 Degree Brace Strut" and "60 Degree Brace Strut". The required wall pressure from Table 2 must be less than the max wall pressure specified for the chosen strut and brace orientations.

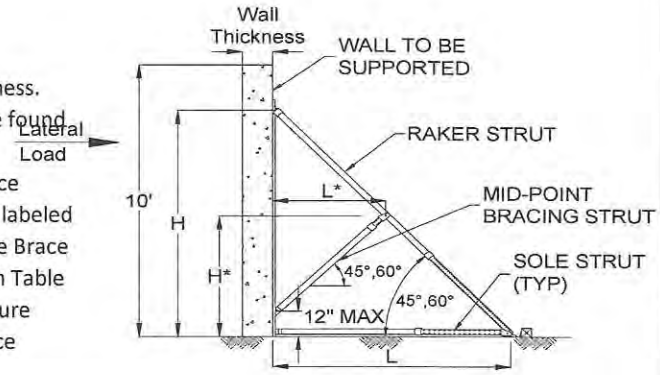

For Applications to Resist Other Lateral Loads:

1) Determine the maximum lateral load or pressure that will be exerted on the wall to be supported.

2) Choose the strut and mid-point brace orientation to be used from the tables labeled "45 Degree Brace Strut" and "60 Degree Brace Strut". The required lateral load or wall pressure must be less than the max lateral load or wall pressure specified for the chosen strut and brace orientations.

REGISTERED PROFESSIONAL ENGINEER
ADRIANUS J. VERMEULEN
No. 69082
Exp. 6/30/14
CIVIL
STATE OF CALIFORNIA

AIRSHORE RAKER RAIL ASSEMBLY WITH MIDPOINT BRACING

J.M. TURNER ENGINEERING, INC.
CONSULTING ENGINEERS
1325 COLLEGE AVE., SANTA ROSA, CA. 95404
(707) 528-4503 FAX (707) 528-4505

DATE:	REV DATE:	JOB NO:
3/10/2011	3/13/2012	13088-1

HURST JAWS OF LIFE® AIRSHORE

711 North Post Rd Shelby, NC 28150
704-487-6961 800-537-2659

Airshore Raker Rail Assembly With Midpoint Bracing

Predicted Lateral Force-Wind	
Wind Speed (mph)	Force PSF
50	17.2
60	24.7
70	33.6
80	43.9
90	55.6
100	68.6

Table 1

Seismic Force = 0.3 x Weight	
Concrete Wall Thickness (in)	Force PSF
6	22.5
8	30.0
12	45.0

Table 2

45 Degree Raker Strut
Maximum Wall Height = 10 ft
Maximum Raker Spacing = 6 ft

45 Degree Brace Strut					
Raker Strut Dimensions: (ft)				Allowable Lateral Force (lbs)	Allowable Wall Pressure (psf)
H	L	H*	L*		
6	6	3.5	2.5	18151	214
7	7	4	3	14202	167
8	8	4.5	3.5	11221	132
9	9	5	4	9089	107
10	10	5.5	4.5	7512	89
11	11	6	5	6312	74
12	12	6.5	5.5	5378	63

60 Degree Brace Strut					
Raker Strut Dimensions: (ft)				Allowable Lateral Force (lbs)	Allowable Wall Pressure (psf)
H	L	H*	L*		
6	6	4.17	1.83	13068	109
7	7	4.80	2.20	9847	82
8	8	5.44	2.56	7684	64
9	9	6.07	2.93	6164	51
10	10	6.71	3.29	5053	42
11	11	7.34	3.66	4218	35
12	12	7.97	4.03	3574	30

Instructions For Use of Tabulated Data:

For Applications to Resist Wind Loads:

1) Determine the maximum anticipated wind speed. The corresponding wind force can be found in Table 1.

2) Choose the strut and mid-point brace orientation to be used from the tables labeled "45 Degree Brace Strut" and "60 Degree Brace Strut". The required wall pressure from Table 1 must be less than the max wall pressure specified for the chosen strut and brace orientations.

For Applications to Resist Seismic Loads on Concrete Walls:

1) Determine the maximum wall thickness. The corresponding seismic force can be found in Table 2.

2) Choose the strut and mid-point brace orientation to be used from the tables labeled "45 Degree Brace Strut" and "60 Degree Brace Strut". The required wall pressure from Table 2 must be less than the max wall pressure specified for the chosen strut and brace orientations.

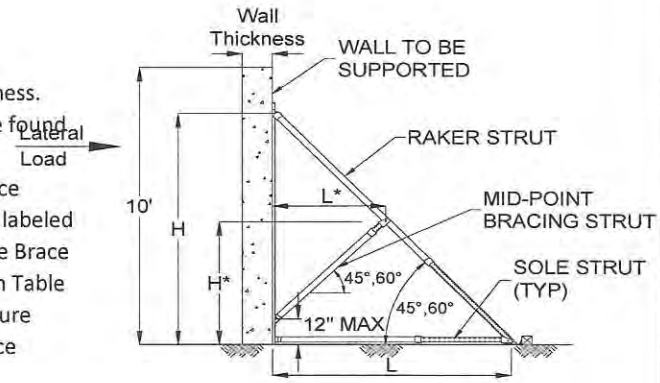

For Applications to Resist Other Lateral Loads:

1) Determine the maximum lateral load or pressure that will be exerted on the wall to be supported.

2) Choose the strut and mid-point brace orientation to be used from the tables labeled "45 Degree Brace Strut" and "60 Degree Brace Strut". The required lateral load or wall pressure must be less than the max lateral load or wall pressure specified for the chosen strut and brace orientations.

REGISTERED PROFESSIONAL ENGINEER
ADRIANUS J. VERMEULEN
No. 69082
Exp. 6/30/14
CIVIL
STATE OF CALIFORNIA

AIRSHORE RAKER RAIL ASSEMBLY WITH MIDPOINT BRACING

J.M. TURNER ENGINEERING, INC.
CONSULTING ENGINEERS
1325 COLLEGE AVE., SANTA ROSA, CA. 95404
(707) 528-4503 FAX (707) 528-4505

DATE:	REV DATE:	JOB NO:
3/10/2011	3/13/2012	13088-1

Airshore Raker Rail Assembly With Midpoint Bracing

HURST JAWS OF LIFE® AIRSHORE

711 North Post Rd Shelby, NC 28150
704-487-6961 800-537-2659

Predicted Lateral Force-Wind	
Wind Speed (mph)	Force PSF
50	17.2
60	24.7
70	33.6
80	43.9
90	55.6
100	68.6

Table 1

Seismic Force = 0.3 x Weight	
Concrete Wall Thickness (in)	Force PSF
6	22.5
8	30.0
12	45.0

Table 2

45 Degree Raker Strut
Maximum Wall Height = 20 ft
Maximum Raker Spacing = 5 ft

45 Degree Brace Strut					
Raker Strut Dimensions: (ft)				Allowable Lateral	Allowable Wall
H	L	H*	L*	Force (lbs)	Pressure (psf)
6	6	3.5	2.5	18151	128
7	7	4	3	14202	100
8	8	4.5	3.5	11221	79
9	9	5	4	9089	64
10	10	5.5	4.5	7512	53
11	11	6	5	6312	45
12	12	6.5	5.5	5378	38

60 Degree Brace Strut					
Raker Strut Dimensions: (ft)				Maximum Lateral	Allowable Wall
H	L	H*	L*	Force (lbs)	Pressure (psf)
6	6	4.17	1.83	13068	65
7	7	4.80	2.20	9847	49
8	8	5.44	2.56	7684	38
9	9	6.07	2.93	6164	31
10	10	6.71	3.29	5053	25
11	11	7.34	3.66	4218	21
12	12	7.97	4.03	3574	18

Instructions For Use of Tabulated Data:

For Applications to Resist Wind Loads:

1) Determine the maximum anticipated wind speed. The corresponding wind force can be found in Table 1.

2) Choose the strut and mid-point brace orientation to be used from the tables labeled "45 Degree Brace Strut" and "60 Degree Brace Strut". The required wall pressure from Table 1 must be less than the max wall pressure specified for the chosen strut and brace orientations.

For Applications to Resist Other Lateral Loads:

1) Determine the maximum lateral load or pressure that will be exerted on the wall to be supported.

2) Choose the strut and mid-point brace orientation to be used from the tables labeled "45 Degree Brace Strut" and "60 Degree Brace Strut". The required lateral load or wall pressure must be less than the max lateral load or wall pressure specified for the chosen strut and brace orientations.

For Applications to Resist Seismic Loads on Concrete Walls:

1) Determine the maximum wall thickness. The corresponding seismic force can be found in Table 2.

2) Choose the strut and mid-point brace orientation to be used from the tables labeled "45 Degree Brace Strut" and "60 Degree Brace Strut". The required wall pressure from Table 2 must be less than the max wall pressure specified for the chosen strut and brace orientations.

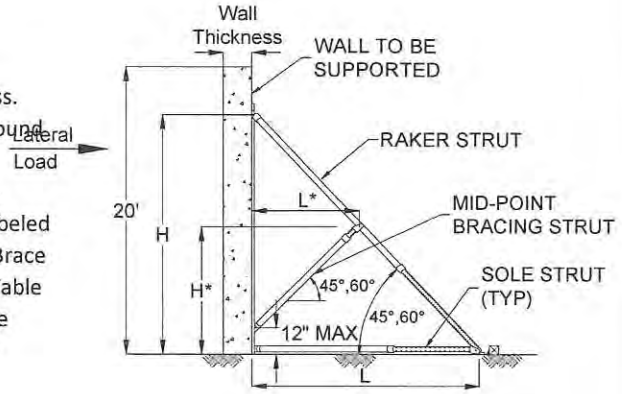

REGISTERED PROFESSIONAL ENGINEER
ADRIANUS J. VERMEULEN
No. 69082
Exp. 6/30/14
CIVIL
STATE OF CALIFORNIA

AIRSHORE RAKER RAIL ASSEMBLY WITH MIDPOINT BRACING

J.M. TURNER ENGINEERING, INC.
CONSULTING ENGINEERS
1325 COLLEGE AVE., SANTA ROSA, CA. 95404
(707) 528-4503 FAX (707) 528-4505

DATE:	REV DATE:	JOB NO:
3/10/2011	3/13/2012	13088-1

HURST JAWS OF LIFE® AIRSHORE

711 North Post Rd Shelby, NC 28150
704-487-6961 800-537-2659

Airshore Raker Rail Assembly With Midpoint Bracing

Predicted Lateral Force-Wind	
Wind Speed (mph)	Force PSF
50	17.2
60	24.7
70	33.6
80	43.9
90	55.6
100	68.6

Table 1

Seismic Force = 0.3 x Weight	
Concrete Wall Thickness (in)	Force PSF
6	22.5
8	30.0
12	45.0

Table 2

45 Degree Raker Strut
Maximum Wall Height = 20 ft
Maximum Raker Spacing = 6 ft

45 Degree Brace Strut					
Raker Strut Dimensions: (ft)				Allowable Lateral Force (lbs)	Allowable Wall Pressure (psf)
H	L	H*	L*		
6	6	3.5	2.5	18151	107
7	7	4	3	14202	84
8	8	4.5	3.5	11221	66
9	9	5	4	9089	54
10	10	5.5	4.5	7512	44
11	11	6	5	6312	37
12	12	6.5	5.5	5378	32

60 Degree Brace Strut					
Raker Strut Dimensions: (ft)				Maximum Lateral Force (lbs)	Allowable Wall Pressure (psf)
H	L	H*	L*		
6	6	4.17	1.83	13068	54
7	7	4.80	2.20	9847	41
8	8	5.44	2.56	7684	32
9	9	6.07	2.93	6164	26
10	10	6.71	3.29	5053	21
11	11	7.34	3.66	4218	18
12	12	7.97	4.03	3574	15

Instructions For Use of Tabulated Data:

For Applications to Resist Wind Loads:

1) Determine the maximum anticipated wind speed. The corresponding wind force can be found in Table 1.

2) Choose the strut and mid-point brace orientation to be used from the tables labeled "45 Degree Brace Strut" and "60 Degree Brace Strut". The required wall pressure from Table 1 must be less than the max wall pressure specified for the chosen strut and brace orientations.

For Applications to Resist Seismic Loads on Concrete Walls:

1) Determine the maximum wall thickness. The corresponding seismic force can be found in Table 2.

2) Choose the strut and mid-point brace orientation to be used from the tables labeled "45 Degree Brace Strut" and "60 Degree Brace Strut". The required wall pressure from Table 2 must be less than the max wall pressure specified for the chosen strut and brace orientations.

For Applications to Resist Other Lateral Loads:

1) Determine the maximum lateral load or pressure that will be exerted on the wall to be supported.

2) Choose the strut and mid-point brace orientation to be used from the tables labeled "45 Degree Brace Strut" and "60 Degree Brace Strut". The required lateral load or wall pressure must be less than the max lateral load or wall pressure specified for the chosen strut and brace orientations.

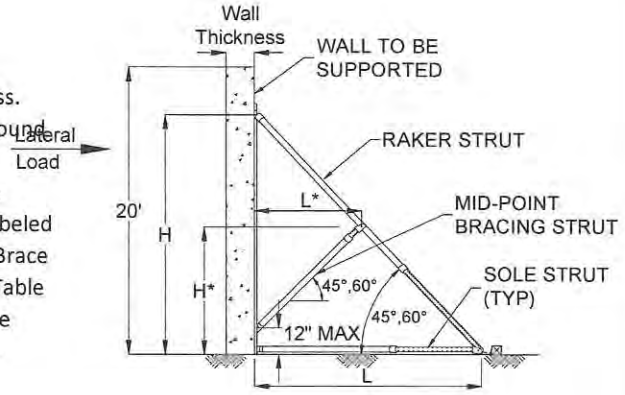

REGISTERED PROFESSIONAL ENGINEER
ADRIANUS J. VERMEULEN
No. 69082
Exp. 6/30/14
CIVIL
STATE OF CALIFORNIA

AIRSHORE RAKER RAIL ASSEMBLY WITH MIDPOINT BRACING

J.M. TURNER ENGINEERING, INC.
CONSULTING ENGINEERS
1325 COLLEGE AVE., SANTA ROSA, CA. 95404
(707) 528-4503 FAX (707) 528-4505

DATE:	REV DATE:	JOB NO:
3/10/2011	3/13/2012	13088-1

Airshore Raker Rail Assembly With Midpoint Bracing

HURST JAWS OF LIFE® AIRSHORE

711 North Post Rd Shelby, NC 28150
704-487-6961 800-537-2659

Predicted Lateral Force-Wind	
Wind Speed (mph)	Force PSF
50	17.2
60	24.7
70	33.6
80	43.9
90	55.6
100	68.6

Table 1

Seismic Force = 0.3 x Weight	
Concrete Wall Thickness (in)	Force PSF
6	22.5
8	30.0
12	45.0

Table 2

60 Degree Raker Strut
Maximum Wall Height = 10 ft
Maximum Raker Spacing = 5 ft

45 Degree Brace Strut					
Raker Strut Dimensions: (ft)				Allowable Lateral Force (lbs)	Allowable Wall Pressure (psf)
H	L	H*	L*		
6	3.46	2.83	1.83	21316	213
7	4.04	3.20	2.20	19519	195
8	4.62	3.56	2.56	17307	173
9	5.2	3.93	2.93	13250	133
10	5.77	4.29	3.29	10470	105
11	6.35	4.66	3.66	8480	85
12	6.93	5.03	4.03	7009	70

60 Degree Brace Strut					
Raker Strut Dimensions: (ft)				Allowable Lateral Force (lbs)	Allowable Wall Pressure (psf)
H	L	H*	L*		
6	3	3.50	1.44	20380	204
7	4	4.00	1.73	18963	190
8	5	4.50	2.02	16832	168
9	5	5.00	2.31	13634	136
10	6	5.50	2.60	11268	113
11	6	6.00	2.89	9468	95
12	7	6.50	3.18	8067	81

Instructions For Use of Tabulated Data:

For Applications to Resist Wind Loads:

1) Determine the maximum anticipated wind speed. The corresponding wind force can be found in Table 1.

2) Choose the strut and mid-point brace orientation to be used from the tables labeled "45 Degree Brace Strut" and "60 Degree Brace Strut". The required wall pressure from Table 1 must be less than the max wall pressure specified for the chosen strut and brace orientations.

For Applications to Resist Seismic Loads on Concrete Walls:

1) Determine the maximum wall thickness. The corresponding seismic force can be found in Table 2.

2) Choose the strut and mid-point brace orientation to be used from the tables labeled "45 Degree Brace Strut" and "60 Degree Brace Strut". The required wall pressure from Table 2 must be less than the max wall pressure specified for the chosen strut and brace orientations.

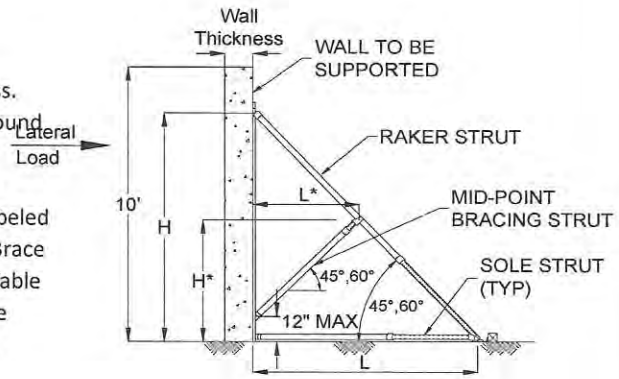

For Applications to Resist Other Lateral Loads:

1) Determine the maximum lateral load or pressure that will be exerted on the wall to be supported.

2) Choose the strut and mid-point brace orientation to be used from the tables labeled "45 Degree Brace Strut" and "60 Degree Brace Strut". The required lateral load or wall pressure must be less than the max lateral load or wall pressure specified for the chosen strut and brace orientations.

AIRSHORE RAKER RAIL ASSEMBLY WITH MIDPOINT BRACING

J.M. TURNER ENGINEERING, INC.
CONSULTING ENGINEERS
1325 COLLEGE AVE., SANTA ROSA, CA. 95404
(707) 528-4503 FAX (707) 528-4505

DATE:	REV DATE:	JOB NO:
3/10/2011	3/13/2012	13088-1

Airshore Raker Rail Assembly With Midpoint Bracing

HURST JAWS OF LIFE® AIRSHORE

711 North Post Rd Shelby, NC 28150
704-487-6961 800-537-2659

Predicted Lateral Force-Wind	
Wind Speed (mph)	Force PSF
50	17.2
60	24.7
70	33.6
80	43.9
90	55.6
100	68.6

Table 1

Seismic Force = 0.3 x Weight	
Concrete Wall Thickness (in)	Force PSF
6	22.5
8	30.0
12	45.0

Table 2

60 Degree Raker Strut
Maximum Wall Height = 10 ft
Maximum Raker Spacing = 6 ft

45 Degree Brace Strut					
Raker Strut Dimensions: (ft)				Allowable Lateral Force (lbs)	Allowable Wall Pressure (psf)
H	L	H*	L*		
6	3.46	2.83	1.83	21316	178
7	4.04	3.20	2.20	19519	163
8	4.62	3.56	2.56	17307	144
9	5.2	3.93	2.93	13250	110
10	5.77	4.29	3.29	10470	87
11	6.35	4.66	3.66	8480	71
12	6.93	5.03	4.03	7009	58

60 Degree Brace Strut					
Raker Strut Dimensions: (ft)				Allowable Lateral Force (lbs)	Allowable Wall Pressure (psf)
H	L	H*	L*		
6	3	3.50	1.44	20380	170
7	4	4.00	1.73	18963	158
8	5	4.50	2.02	16832	140
9	5	5.00	2.31	13634	114
10	6	5.50	2.60	11268	94
11	6	6.00	2.89	9468	79
12	7	6.50	3.18	8067	67

Instructions For Use of Tabulated Data:

For Applications to Resist Wind Loads:

1) Determine the maximum anticipated wind speed. The corresponding wind force can be found in Table 1.

2) Choose the strut and mid-point brace orientation to be used from the tables labeled "45 Degree Brace Strut" and "60 Degree Brace Strut". The required wall pressure from Table 1 must be less than the max wall pressure specified for the chosen strut and brace orientations.

For Applications to Resist Seismic Loads on Concrete Walls:

1) Determine the maximum wall thickness. The corresponding seismic force can be found in Table 2.

2) Choose the strut and mid-point brace orientation to be used from the tables labeled "45 Degree Brace Strut" and "60 Degree Brace Strut". The required wall pressure from Table 2 must be less than the max wall pressure specified for the chosen strut and brace orientations.

For Applications to Resist Other Lateral Loads:

1) Determine the maximum lateral load or pressure that will be exerted on the wall to be supported.

2) Choose the strut and mid-point brace orientation to be used from the tables labeled "45 Degree Brace Strut" and "60 Degree Brace Strut". The required lateral load or wall pressure must be less than the max lateral load or wall pressure specified for the chosen strut and brace orientations.

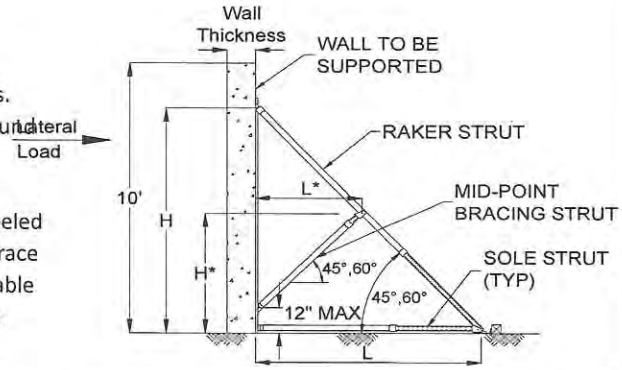

REGISTERED PROFESSIONAL ENGINEER
ADRIANUS J. VERMEULEN
No. 69082
Exp. 6/30/14
CIVIL
STATE OF CALIFORNIA

AIRSHORE RAKER RAIL ASSEMBLY WITH MIDPOINT BRACING

J.M. TURNER ENGINEERING, INC.
CONSULTING ENGINEERS
1325 COLLEGE AVE., SANTA ROSA, CA. 95404
(707) 528-4503 FAX (707) 528-4505

DATE:	REV DATE:	JOB NO:
3/10/2011	3/13/2012	13088-1

Airshore Raker Rail Assembly With Midpoint Bracing

HURST JAWS OF LIFE® AIRSHORE

711 North Post Rd Shelby, NC 28150
704-487-6961 800-537-2659

Predicted Lateral Force-Wind	
Wind Speed (mph)	Force PSF
50	17.2
60	24.7
70	33.6
80	43.9
90	55.6
100	68.6

Table 1

Seismic Force = 0.3 x Weight	
Concrete Wall Thickness (in)	Force PSF
6	22.5
8	30.0
12	45.0

Table 2

60 Degree Raker Strut
Maximum Wall Height = 20 ft
Maximum Raker Spacing = 5 ft

45 Degree Brace Strut					
Raker Strut Dimensions: (ft)				Allowable Lateral Force (lbs)	Allowable Wall Pressure (psf)
H	L	H*	L*		
6	3.46	2.83	1.83	21316	107
7	4.04	3.20	2.20	19519	98
8	4.62	3.56	2.56	17307	87
9	5.2	3.93	2.93	13250	66
10	5.77	4.29	3.29	10470	52
11	6.35	4.66	3.66	8480	42
12	6.93	5.03	4.03	7009	35

60 Degree Brace Strut					
Raker Strut Dimensions: (ft)				Allowable Lateral Force (lbs)	Allowable Wall Pressure (psf)
H	L	H*	L*		
6	3	3.50	1.44	20380	102
7	4	4.00	1.73	18963	95
8	5	4.50	2.02	16832	84
9	5	5.00	2.31	13634	68
10	6	5.50	2.60	11268	56
11	6	6.00	2.89	9468	47
12	7	6.50	3.18	8067	40

Instructions For Use of Tabulated Data:

For Applications to Resist Wind Loads:

1) Determine the maximum anticipated wind speed. The corresponding wind force can be found in Table 1.

2) Choose the strut and mid-point brace orientation to be used from the tables labeled "45 Degree Brace Strut" and "60 Degree Brace Strut". The required wall pressure from Table 1 must be less than the max wall pressure specified for the chosen strut and brace orientations.

For Applications to Resist Seismic Loads on Concrete Walls:

1) Determine the maximum wall thickness. The corresponding seismic force can be found in Table 2.

2) Choose the strut and mid-point brace orientation to be used from the tables labeled "45 Degree Brace Strut" and "60 Degree Brace Strut". The required wall pressure from Table 2 must be less than the max wall pressure specified for the chosen strut and brace orientations.

For Applications to Resist Other Lateral Loads:

1) Determine the maximum lateral load or pressure that will be exerted on the wall to be supported.

2) Choose the strut and mid-point brace orientation to be used from the tables labeled "45 Degree Brace Strut" and "60 Degree Brace Strut". The required lateral load or wall pressure must be less than the max lateral load or wall pressure specified for the chosen strut and brace orientations.

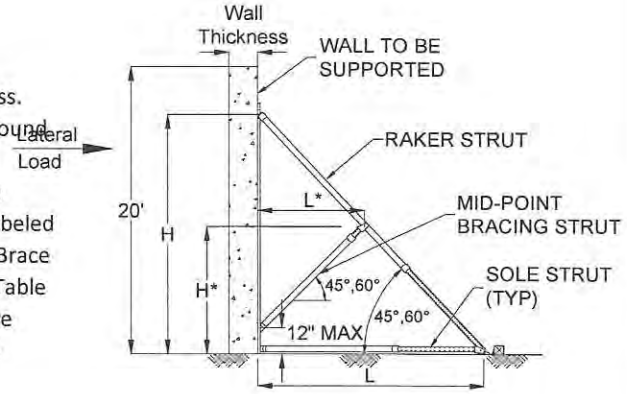

REGISTERED PROFESSIONAL ENGINEER
ADRIANUS J. VERMEULEN
No. 69082
Exp. 6/30/14
CIVIL
STATE OF CALIFORNIA

AIRSHORE RAKER RAIL ASSEMBLY WITH MIDPOINT BRACING

J.M. TURNER ENGINEERING, INC.
CONSULTING ENGINEERS
1325 COLLEGE AVE., SANTA ROSA, CA. 95404
(707) 528-4503 FAX (707) 528-4505

DATE:	REV DATE:	JOB NO:
3/10/2011	3/13/2012	13088-1

Airshore Raker Rail Assembly With Midpoint Bracing

HURST JAWS OF LIFE® AIRSHORE

711 North Post Rd Shelby, NC 28150
704-487-6961 800-537-2659

Predicted Lateral Force-Wind	
Wind Speed (mph)	Force PSF
50	17.2
60	24.7
70	33.6
80	43.9
90	55.6
100	68.6

Table 1

Seismic Force = 0.3 x Weight	
Concrete Wall Thickness (in)	Force PSF
6	22.5
8	30.0
12	45.0

Table 2

60 Degree Raker Strut
Maximum Wall Height = 20 ft
Maximum Raker Spacing = 6 ft

45 Degree Brace Strut					
Raker Strut Dimensions: (ft)				Allowable Lateral Force (lbs)	Allowable Wall Pressure (psf)
H	L	H*	L*		
6	3.46	2.83	1.83	21316	89
7	4.04	3.20	2.20	19519	81
8	4.62	3.56	2.56	17307	72
9	5.2	3.93	2.93	13250	55
10	5.77	4.29	3.29	10470	44
11	6.35	4.66	3.66	8480	35
12	6.93	5.03	4.03	7009	29

60 Degree Brace Strut					
Raker Strut Dimensions: (ft)				Allowable Lateral Force (lbs)	Allowable Wall Pressure (psf)
H	L	H*	L*		
6	3	3.50	1.44	20380	85
7	4	4.00	1.73	18963	79
8	5	4.50	2.02	16832	70
9	5	5.00	2.31	13634	57
10	6	5.50	2.60	11268	47
11	6	6.00	2.89	9468	39
12	7	6.50	3.18	8067	34

Instructions For Use of Tabulated Data:

For Applications to Resist Wind Loads:

1) Determine the maximum anticipated wind speed. The corresponding wind force can be found in Table 1.

2) Choose the strut and mid-point brace orientation to be used from the tables labeled "45 Degree Brace Strut" and "60 Degree Brace Strut". The required wall pressure from Table 1 must be less than the max wall pressure specified for the chosen strut and brace orientations.

For Applications to Resist Seismic Loads on Concrete Walls:

1) Determine the maximum wall thickness. The corresponding seismic force can be found in Table 2.

2) Choose the strut and mid-point brace orientation to be used from the tables labeled "45 Degree Brace Strut" and "60 Degree Brace Strut". The required wall pressure from Table 2 must be less than the max wall pressure specified for the chosen strut and brace orientations.

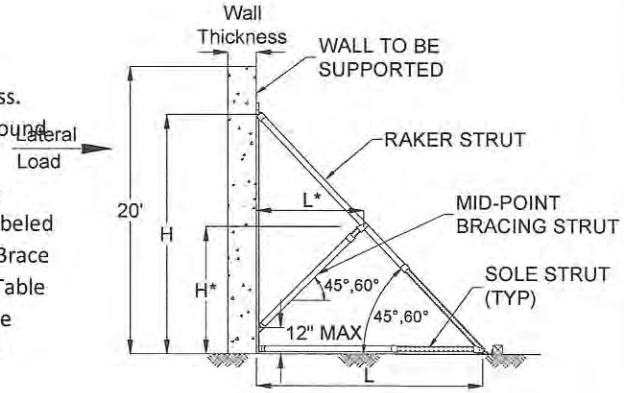

For Applications to Resist Other Lateral Loads:

1) Determine the maximum lateral load or pressure that will be exerted on the wall to be supported.

2) Choose the strut and mid-point brace orientation to be used from the tables labeled "45 Degree Brace Strut" and "60 Degree Brace Strut". The required lateral load or wall pressure must be less than the max lateral load or wall pressure specified for the chosen strut and brace orientations.

REGISTERED PROFESSIONAL ENGINEER
ADRIANUS J. VERMEULEN
No. 69082
Exp. 6/30/14
CIVIL
STATE OF CALIFORNIA

AIRSHORE RAKER RAIL ASSEMBLY WITH MIDPOINT BRACING

J.M. TURNER ENGINEERING, INC.
CONSULTING ENGINEERS
1325 COLLEGE AVE., SANTA ROSA, CA. 95404
(707) 528-4503 FAX (707) 528-4505

DATE:	REV DATE:	JOB NO:
3/10/2011	3/13/2012	13088-1

AirShore Standard/Swivel Pnuematic Struts

Tabulated Data For Use in Excavations

AIRSHORE

AIRSHORE INTERNATIONAL

AIRSHORE STANDARD PNEUMATIC STRUT		
LENGTH (FT)		CAPACITY (LBS)*
Size (in)	Size (FT)	1 PIN
21-28	2	19,000 LB
26-37	2 to 3	19,000 LB
33-49	3 to 4	19,000 LB
45-67	4 to 5.5	19,000 LB
63-97	5 to 8	19,000 LB
93-144	8 to 12	14,000 LB
114-198	10 to 12	14,000 LB
114-198	12 to 14	10,000 LB
114-198	14 to 16	5,000 LB

Factor of Safety Is 2:1

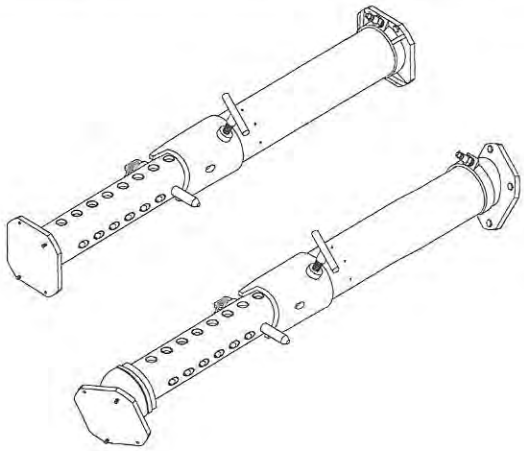

TABLE 1-MAXIMUM ALLOWABLE SPACING

Soil Type	Trench Depth (FT)	Trench Width (FT) (FT)	Horizontal Spacing (FT) 1 Pin	Vertical Spacing (FT) (FT)
A-25	4 to 10	to 6	8	4
		6 to 12	8	4
		12 to 16	5	4
	10 to 15	to 6	8	4
		6 to 12	6	4
		12 to 16	3	4
	15 to 20	to 6	6	4
		6 to 12	5	4
		12 to 16	1	4
B-45	4 to 10	to 6	8	4
		6 to 12	6	4
		12 to 16	2	4
	10 to 15	to 6	6	4
		6 to 12	4	4
		12 to 16	2	3
	15 to 20	to 6	4	4
		6 to 12	3	4
		12 to 16	2	3
C-60	4 to 10	to 6	6	4
		6 to 12	4	4
		12 to 16	2	3
	10 to 15	to 6	4	4
		6 to 12	4	4
		12 to 16	2	2
	15 to 20	to 6	4	4
		6 to 12	3	4

NOTES:

1) Soil type to be determined by competent person.

2) Charts are based on soil types as defined in OSHA, CFR 29, Sub Part P, July 1997.

3) Type C-60 soil is defined as C soil that will stand long enough for shores to be installed. In C-80 soil the shores cannot be installed because the soil will fall in before it is shored.

4) The AirShore strut should be used against 3/4" Fin Form plywood, or a minimum 6" wide x 18" long spot shore.

5) In C-60 , 3/4" high density Fin Form plywood shall be used in all cases to prevent sloughing and raveling.

6) In all soils sheeting should be used to prevent sloughing or raveling if it occurs.

7) Spot shore rails may be set horizontal or vertical

8) Shores may be used with swivel heads to 30 degres maximum.

REGISTERED PROFESSIONAL ENGINEER
ADRIANUS J. VERMEULEN
No. 69082
Exp. 6/30/14
CIVIL
STATE OF CALIFORNIA

DATE	REVISED	JOB NO:	Sheet #
6/1/2000	3/13/2012	13088-1	1 of 2

AirShore Standard/Swivil Pnumatic Struts
Tabulated Data For Use in Excavations

AIRSHORE

AIRSHORE INTERNATIONAL

Installation Procedure

1) Soil must first be classified by a competent person in accordance with OSHA appendix A.

2) Tabulated Data allows for a 200 PSF surcharge load. Move surcharge away from excavation or space shores closer together to allow for larger surcharge loads.

3) Inspect equipment to be sure that it is in proper working order.

4) Struts are to be placed and pressurized from outside the trench or from within a shored area. Under no circumstances is a worker allowed to enter an unshored area.

5) Pressurize struts to the min recommended pressure.

6) There should be a minimum of three columns of shoring in excavations over 10 ft long and two columns if it is less than 10 ft long. Shoring columns shall be spaced in accordance with the tabulated data.

7) Plywood or lagging is to be used to prevent sloughing and raveling. In all cases where sloughing or raveling occur it must be used. In soil types A & B the sheeting may be spaced as needed to stop the sloughing and raveling. In C-60 Soil Plywood sheeting must always be used.

REMOVAL PROCEDURE

1) Shores are to be removed from the bottom of the trench up. Workers should be outside the trench or inside shored areas when removing shoring.

2) Previously shored trenches are more prone to collapse and should be backfilled or barricaded to prevent workers or equipment from falling into the trench if it collapses.

REGISTERED PROFESSIONAL ENGINEER
ADRIANUS J. VERMEULEN
No. 69082
Exp. 6/30/14
CIVIL
STATE OF CALIFORNIA

	DATE	REVISED	JOB NO:	Sheet #
	6/1/2000	3/13/2012	13088-1	2 of 2

AirShore
Tabulated Data For Use in Excavations
AIRSHORE W/ Spot Shore Rail

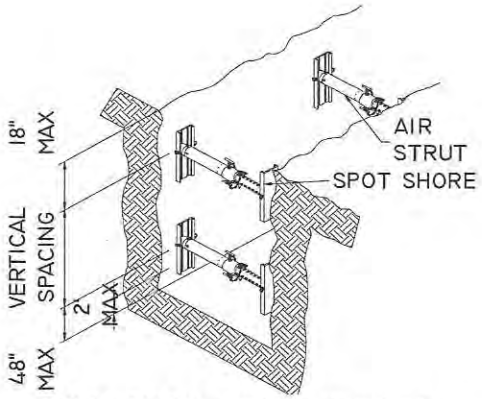

18" SPOT RAIL w/out Plywood

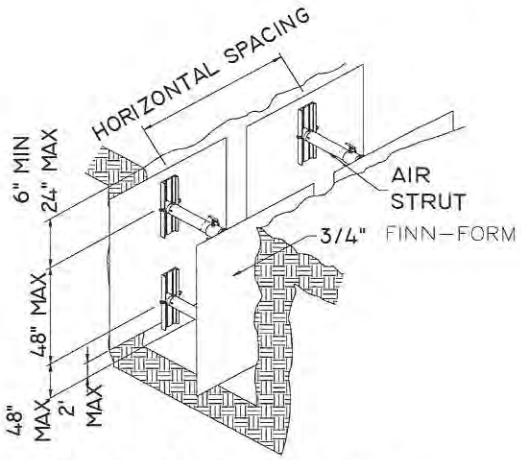

18" SPOT RAIL w/ Plywood

Recommended strut pressures (min.)			
TYPE A & B		TYPE C	
4 to 20 ft	116 PSI	4 to 20ft	116 PSI

NOTES:

1) Soil type to be determined by competent person.

2) Charts are based on soil types as defined in OSHA, CFR 29, Sub Part P, March 1996.

3) Type C-60 soil is defined as C soil that will stand long enough for shores to be installed. In C-80 soil the shores cannot be installed because the soil will fall in before it is shored.

4) Spot shore rails are able to bear directly against trench walls without plywood sheeting in class A-25 and B-45 soils to a depth of 20' unless sloughing or raveling occurs. In C-60 soil spot rails are able to bear directly against trench walls without plywood sheeting to a depth of 10' unless sloughing or raveling occurs.

5) Spot shore rails may be set horizontal or vertical.

6) Shores may be used with swivel heads to 30 degrees maximum.

TABLE 1-MAXIMUM ALLOWABLE SPACING

Soil Type	Trench Depth (FT)	Trench Width (FT) (FT)	Horizontal Spacing (FT)	Vertical Spacing (FT) (FT)
A-25	4 to 10	to 6	8	4
		6 to 12	8	4
		12 to 16	5	4
	10 to 15	to 6	8	4
		6 to 12	6	4
		12 to 16	4	4
	15 to 20	to 6	6	4
		6 to 12	5	4
		12 to 16	4	4
B-45	4 to 10	to 6	8	4
		6 to 12	8	4
		12 to 16	4	4
	10 to 15	to 6	6	4
		6 to 12	4	4
		12 to 16	4	4
	15 to 20	to 6	4	4
		6 to 12	4	4
		12 to 16	4	4
C-60	4 to 10	to 6	6	4
		6 to 12	4	4
		12 to 16	4	4
	10 to 15	to 6	4	4
		6 to 12	4	4
		12 to 16	4	4
	15 to 20	to 6	4	4
		6 to 12	4	4
		12 to 16	4	4

REGISTERED PROFESSIONAL ENGINEER
ADRIANUS J. VERMEULEN
No. 69082
Exp. 6/30/14
CIVIL
STATE OF CALIFORNIA

DATE	REVISED	JOB NO:	SHEET
9/11/1998	3/13/2012	13088-1	1 of 2

AirShore
Tabulated Data For Use in Excavations
AIRSHORE W/ Spot Shore Rail

Installation Procedure

1) Soil must first be classified by a competent person in accordance with OSHA appendix A.

2) Tabulated Data allows for a 200 PSF surcharge load. Move surcharge away from excavation or space shores closer together to allow for larger surcharge loads.

3) Inspect equipment to be sure that it is in proper working order.

4) Struts are to be placed and pressurized from outside the trench or from within a shored area. Under no circumstances is a worker allowed to enter an unshored area.

5) Pressurize struts to the minimum recommended pressure.

6) There should be a minimum of three columns of shoring in excavations over 10 ft long and two columns if it is less than 10 ft long. Shoring columns shall be spaced in accordance with the tabulated data.

7) Plywood or lagging is to be used to prevent sloughing and raveling. In all cases where sloughing or raveling occur it must be used. In soil types A & B the sheeting may be spaced as needed to stop the sloughing and raveling. In C-60 Soil Plywood sheeting must always be used.

REMOVAL PROCEDURE

1) Shores are to be removed from the bottom of the trench up. Workers should be outside the trench or inside shored areas when removing shoring.

2) Previously shored trenches are more prone to collapse and should be backfilled or barricaded to prevent workers or equipment from falling into the trench if it collapses.

REGISTERED PROFESSIONAL ENGINEER
ADRIANUS J. VERMEULEN
No. 69082
Exp. 6/30/14
CIVIL
STATE OF CALIFORNIA

DATE	REVISED	JOB NO:	SHEET
9/11/1998	3/13/2012	13088-1	2 of 2

LIGHT WEIGHT SHORING SYSTEM (LPS)

Tabulated Data For Use in Excavations

Panel Length (ft)	A (ft)	B (ft)	PSF Rating PSF	Allowable Soil Depth A-25 (ft)	B-45 (ft)	C-60 (ft)
5	0.50	4.0	1552	62	34	26
6	0.50	5.0	970	39	22	16
7	0.50	6.0	665	27	15	12
8	0.83	6.3	623	25	14	12
10	1.50	7.0	582	23	13	12
12	2.00	8.0	724	29	16	12
Maximum allowable width = Trench Shields may be stacked.		See Sheet 3 Bulkhead Depth Chart				

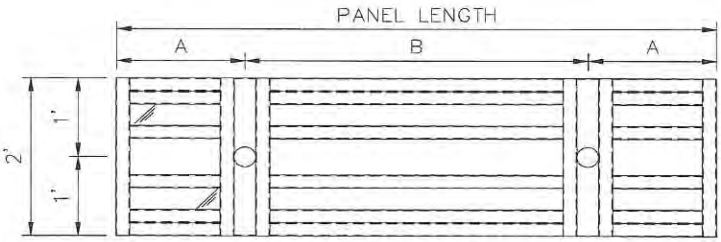

2'–0" PANEL

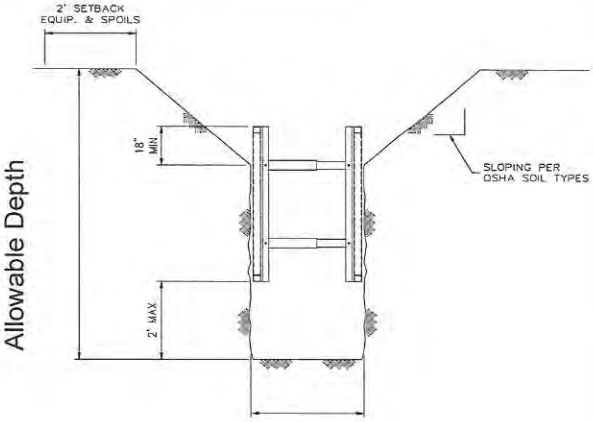

Allowable width

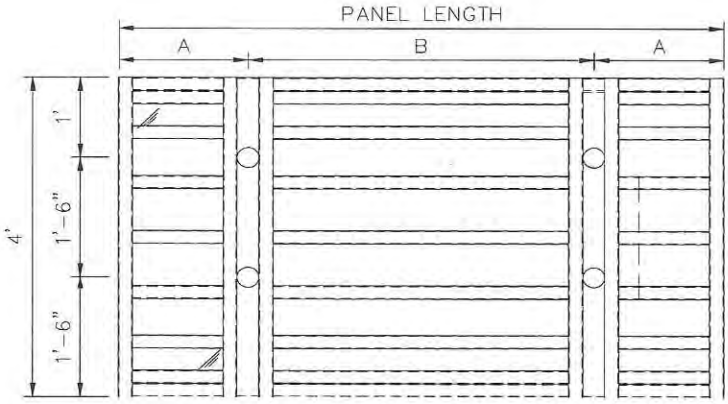

4'–0" PANEL

J.M. TURNER ENGINEERING, INC.
CONSULTING ENGINEERS
1325 COLLEGE AVE., SANTA ROSA, CA. 95404
(707) 528-4503 FAX (707) 528-4505

REGISTERED PROFESSIONAL ENGINEER
ADRIANUS J. VERMEULEN
No. 69082
Exp. 6/30/14
CIVIL
STATE OF CALIFORNIA

DATE	REVISED	JOB NO:	SHEET #
12/10/2003	3/13/2012	13088-1	1 OF 4

LIGHT WEIGHT SHORING SYSTEM (LPS)

Tabulated Data For Use in Excavations

Notes:

1)Excavation and shield shoring shall be in accordance with all applicable requirements of OSHA.
2) Workers shall enter, exit, and work from inside shoring shield only.
3) A competent person shall inspect the excavation prior to workers entering the shored area.
4) Adhere to installation and removal procedures.
5) Excavation shall be dewatered to below the shoring shield, and normal surcharge loads shall be held back a minimum of 2 ft from the edge of the excavation.
6) These shield panels can be used with fixed or adjustable struts up to 12 ft in length.
7) Allow no more than 1 ft between the sides of the shield and the excavated trench wall.
8) Soil shall be classified in accordance with OSHA Appendix A.

Installation Procedure

1) Inspect the shield to ensure that there is no damage and that all pins, connectors, and struts are in place, secure and in proper working condition.
2) Use lifting slings and rigging with a safe working load greater than 10000 lbs. Do not exceed this load when pulling the shield out of the ground.
3) Position the shield in the trench. Allow no workers under or in the vicinity of the shield when it is being lifted and placed.
4) Bulkhead the ends or slope the soil in accordance with OSHA sloping and benching requirements.
5) Remove the rigging and proceed with the work.

Removal Procedure

1) Reattach rigging.
2) Loosen and remove shield. If shield is pulled from loaded trench walls do not exceed 10,000 LB pulling force and keep workers away from rigging when pulling.
3) Backfill or cover excavation in accordance with OSHA requirements.

J.M. TURNER ENGINEERING, INC.
CONSULTING ENGINEERS
1325 COLLEGE AVE., SANTA ROSA, CA. 95404
(707) 528-4503 FAX (707) 528-4505

REGISTERED PROFESSIONAL ENGINEER
ADRIANUS J. VERMEULEN
No. 69082
Exp. 6/30/14
CIVIL
STATE OF CALIFORNIA

DATE	REVISED	JOB NO:	SHEET #
12/10/2003	3/13/2012	13088-1	2 OF 4

LIGHT WEIGHT SHORING SYSTEM (LPS)

Tabulated Data For Use in Excavations

STRUTS / SPREADERS

Minimum Materials for Fixed or Telescopic Struts / Spreaders

Inner Sleeve

Outside Diameter OD =	2.5 in
Inside Diameter ID =	2.224 in
Wall Thickness t =	0.276 in
Section Modulus S_x =	1.339 in^3
Maximum Moment M_{max} =	3.4 K-Ft
Material	T6061 Aluminum
Allowable Bending F_b =	24 ksi

Outer Sleeve

Outside Diameter OD =	3 in
Inside Diameter ID =	2.784 in
Wall Thickness t =	0.216 in
Section Modulus S_x =	1.724 in^3
Maximum Moment M_{max} =	3.4 K-Ft
Material	T6061 Aluminum
Allowable Bending F_b =	24 ksi

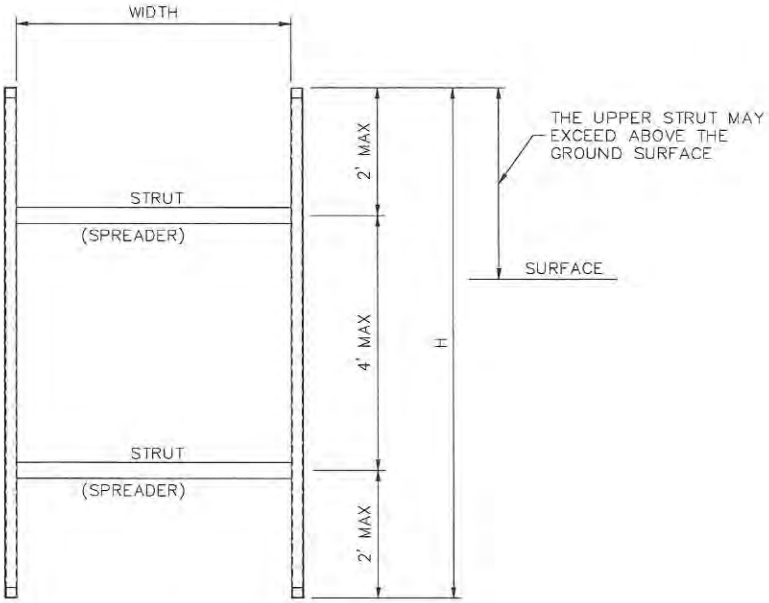

BULKHEAD DEPTH CHART

Excavation Depth		MAXIMUM STRUT / SPREADER WIDTH					
		SOIL TYPE A		SOIL TYPE B		SOIL TYPE C	
(ft)	(m)	(ft)	(m)	(ft)	(m)	(ft)	(m)
50	15.2	2.7	0.8	2.1	0.6	1.8	0.5
40	12.2	3	0.9	2.4	0.7	2	0.6
30	9.1	3.5	1.1	2.7	0.8	2.3	0.7
20	6.1	4.3	1.3	3.3	1.0	2.9	0.9
15	4.6	4.9	1.5	3.9	1.2	3.3	1.0
10	3.0	6	1.8	4.7	1.4	4	1.2
5	1.5	8.5	2.6	6.7	2.0	5.7	1.7

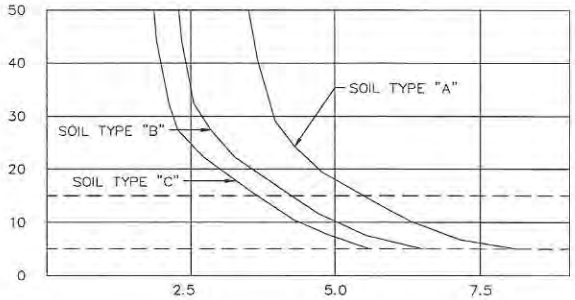

Notes:

1) Fixed strut or spreader not to exceed the maximum extension length for the depth as shown in the bulkhead depth chart.

2) Telescopic cylinder or spreaders require both sleeves to be 67% of the maximum extension as noted in the bulkhead depth chart for the depth.

3) Bulkhead material need not be be attached to the struts / spreaders.

J.M. TURNER ENGINEERING, INC.
CONSULTING ENGINEERS
1325 COLLEGE AVE., SANTA ROSA, CA. 95404
(707) 528-4503 FAX (707) 528-4505

REGISTERED PROFESSIONAL ENGINEER
ADRIANUS J. VERMEULEN
No. 69082
Exp. 6/30/14
CIVIL
STATE OF CALIFORNIA

DATE	REVISED	JOB NO:	SHEET #
12/10/2003	3/13/2012	13088-1	3 OF 4

LIGHT WEIGHT SHORING SYSTEM (LPS)
Tabulated Data For Use in Excavations
FOUR SIDED BOX CONFIGURATION

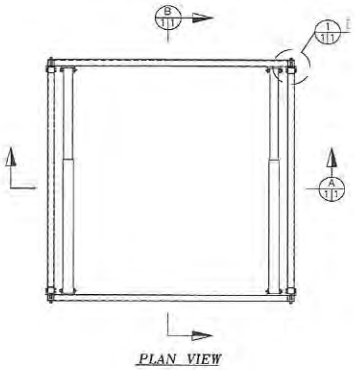

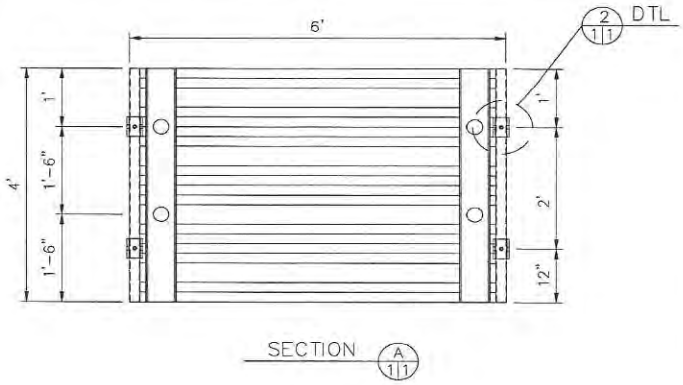

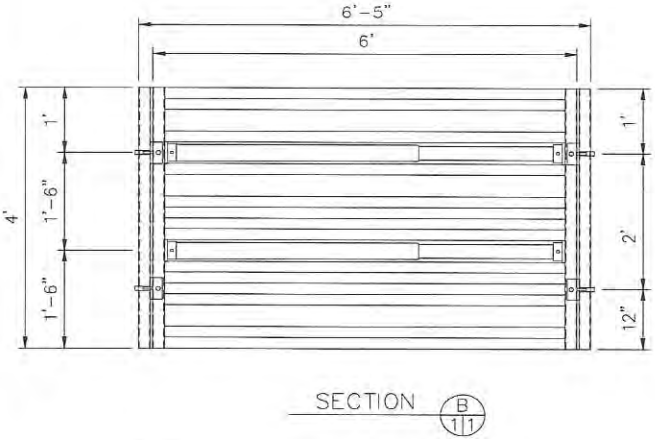

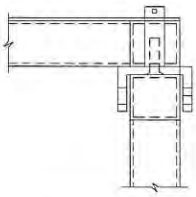

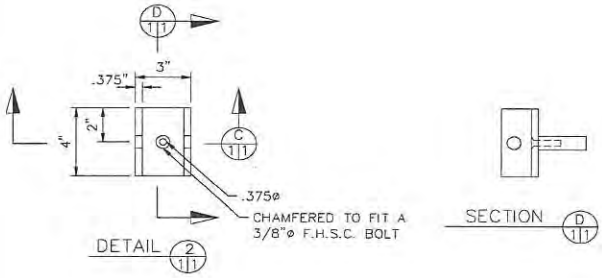

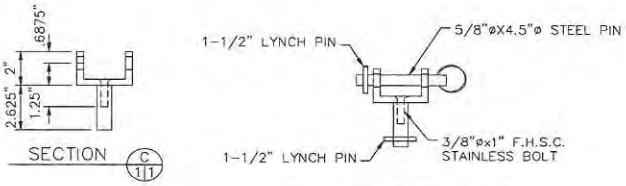

FULLY ASSEMBLED WITH
PIN AND LYNCH PINS

J.M. TURNER ENGINEERING, INC.
CONSULTING ENGINEERS
1325 COLLEGE AVE., SANTA ROSA, CA. 95404
(707) 528-4503 FAX (707) 528-4505

REGISTERED PROFESSIONAL ENGINEER
ADRIANUS J. VERMEULEN
No. 69082
Exp. 6/30/14
CIVIL
STATE OF CALIFORNIA

DATE	REVISED	JOB NO:	SHEET #
2/18/05	3/13/2012	13088-1	4 OF 4

AirShore
Tabulated Data For Use In Excavations
Multishore System with Finn-Form

Multishore	
Plywood (FT)	Airshore Struts (Total)
6	2
8	2
10	3
12	3
16	4

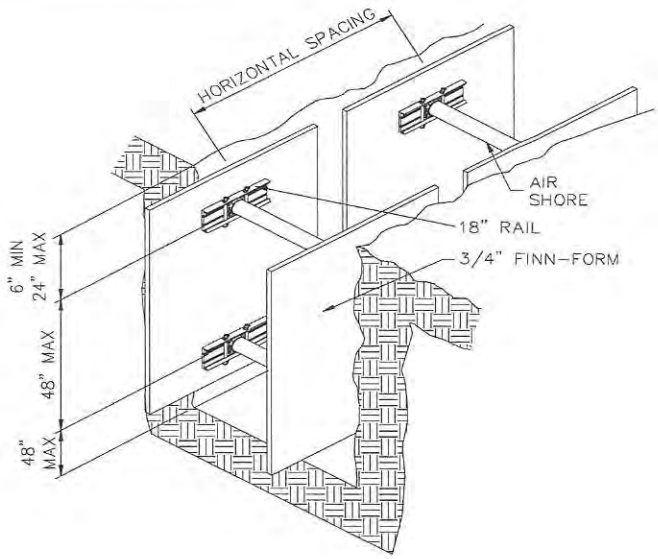

Recommended strut pressures (min.)			
TYPE A & B		TYPE C	
4 to 20 ft	116 PSI	4 to 20ft	116 PSI
Soil Type A-25 Multishore Installation Data (See Sheet 2 for notes)			
Depth of Excavation (FT)	Vertical Strut Spacing (FT)	Horizontal Spacing (FT)	Trench Width (FT)
0 to 10	4	8	15
10 to 15	4	8	15
15 to 20	4	8	15
20 to 25	4	8	12

Soil Type B-45 Multishore Installation Data (See Sheet 2 for notes)			
Depth of Excavation (FT)	Vertical Spacing (FT)	Horizontal Spacing (FT)	Trench Width (FT)
0 to 10	4	8	12
10 to 15	4	8	12
15 to 20	4	6	12
20 to 25	4	5	8

Soil Type C-60 Multishore Installation Data (See Sheet 2 for notes)			
Depth of Excavation (FT)	Vertical Spacing (FT)	Horizontal Spacing (FT)	Trench Width (FT)
0 to 10	4	6	12
10 to 15	4	4	12
15 to 20	4	4	8
20 to 25	4	4	6

REGISTERED PROFESSIONAL ENGINEER
ADRIANUS J. VERMEULEN
No. 69082
Exp. 6/30/14
CIVIL
STATE OF CALIFORNIA

DATE	REVISED	JOB NO: 13088-1
6/1/2000	3/13/2012	Sht 1 of 2

AirShore
Tabulated Data For Use In Excavations
Multishore System with Finn-Form

Notes:

1) Soil Type and shoring configuration to be determined by competent person.

2) Spacing charts are based on soil types as defined in OSHA, CFR 29 Subpart P, July 1997, Appendix A.

3) Sheeting is 3/4" thick 14 ply Finn-Form Plywood. Sheeting is required to prevent raveling & sloughing and is required in all cases in C-60 soil below 10 ft. There may be spaces between sheeting depending on Shore spacing allowances.

4) Type C-60 soil is defined as C-soil that will stand up long enough for the shores to be installed.

5) There must be at least 3 columns of shores in a trench 10 ft and longer and at least 2 columns in trenches less than 10 ft long.

6) Spacing charts allow for surcharge loading from equipment weighing 40,000 lbs or less, and traffic allowed no closer than 2 ft from the edge of the trench. For larger surcharge loads shore spacing shall be reduced or surcharge loads shall be kept farther away from the edges.

7) No vertical loads are to be applied to the shores.

8) Trench walls should be straight and within 20 degrees of vertical. There should not be voids behind the shore struts. Wood blocking may be used to fill voids behind struts.

9) Trenches less than 5 ft deep may require shoring.

10) Shore rail sections may be stacked and used in any combinations provided that there is no more than 4 ft spacing between struts.

Installation Procedures

1) Complete the excavation and immediately install the system.

2) Connect the air supply to the airshore struts.

3) Suspend the multishore at the intended location in the excavation using appropriate lifting equipment such as backhoe or loader.

4) Pressurize the system and install the pins to secure the collar of the top airshore strut. Repeat the procedure progressing to next lower strut.

Removal Procedures

1) Reconnect the air supply and pressurize the system.

2) Remove pins starting at the lowest strut and moving upward.

3) Lift the system out using appropriate lifting equipment.

REGISTERED PROFESSIONAL ENGINEER
ADRIANUS J. VERMEULEN
No. 69082
Exp. 6/30/14
CIVIL
STATE OF CALIFORNIA

DATE	REVISED	JOB NO: 13088-1
6/1/2000	3/13/2012	Sht 2 of 2

AirShore
Tabulated Data For Use In Excavations
Vertical Shores

AIRSHORE
AIRSHORE INTERNATIONAL

Light Duty Rails		Spot Shore	
Rail Length (FT)	Airshore Struts (Total)	Rail Length (FT)	Airshore Struts (Total)
5 FT	2	1.5	1
7FT	2		

Heavy Duty Rails		Raker Rails	
Rail Length (FT)	Airshore Struts (Total)	Rail Length (FT)	Airshore Struts (Total)
2 FT	1		
4 FT	1		
6 FT	2	6 FT	2
8 FT	2	8 FT	2
10 FT	3	10 FT	3
12 FT	3	12 FT	3
16 FT	4	16 FT	4

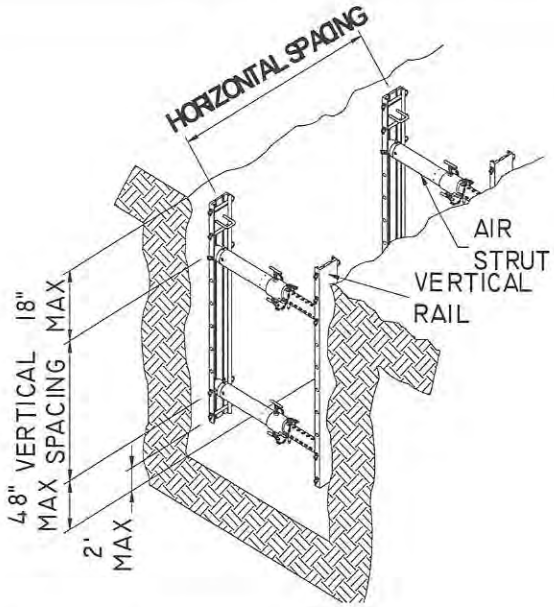

Soil Type A-25 Vertical Shore Instalation Data				(See sheet 2 for notes)
Depth of Excavation (FT)	Vertical Spacing (Ft)	Horizontal Spacing (FT)	Trench Width (FT)	Sheeting-3/4" FinForm,
0 to 10	4	8	15	For sloughing & raveling only
10 to 15	4	8	15	For sloughing & raveling only
15 to 20	4	3	12	For sloughing & raveling only
20 to 25	4	2	8	For sloughing & raveling only

Soil Type B-45 Vertical Shore Instalation Data				(See sheet 2 for notes)
Depth of Excavation (FT)	Vertical Spacing (Ft)	Horizontal Spacing (FT)	Trench Width (FT)	Sheeting-3/4" FinForm,
0 to 10	4	8	12	For sloughing & raveling only
10 to 15	4	6	12	For sloughing & raveling only
15 to 20	4	3	12	For sloughing & raveling only
20 to 25	4	2	8	For sloughing & raveling only

Soil Type C-60 Vertical Shore Instalation Data				(See sheet 2 for notes)
Depth of Excavation (FT)	Vertical Spacing (Ft)	Horizontal Spacing (FT)	Trench Width (FT)	Sheeting-3/4" FinForm,
0 to 10	4	6	12	For sloughing & raveling only
10 to 15	4	4	12	Always required
15 to 20	4	3	8	Always required
20 to 25				

REGISTERED PROFESSIONAL ENGINEER
ADRIANUS J. VERMEULEN
No. 69082
Exp. 6/30/14
CIVIL
STATE OF CALIFORNIA

DATE	REVISED	JOB NO: 13069-1
9/11/1998	3/13/2012	Sht 1 of 2

AirShore
Tabulated Data For Use In Excavations
Vertical Shores

AIRSHORE
AIRSHORE INTERNATIONAL

Notes:

1) Soil Type and shoring configuration to be determined by competent person.

2) Spacing charts are based on soil types as defined in OSHA, CFR 29 Subpart P, March 1996, Appendix A.

3) Sheeting is to be 3/4" thick 14 ply Fin-Form. Sheeting is required to prevent raveling & sloughing and is required in all cases in C-60 soil below 10 ft.

4) Type C-60 soil is defined as C-soil that will stand up long enough for the shores to be installed.

5) There must be at least 3 columns of shores in a trench 10 ft and longer and at least 2 columns in trenches less than 10 ft long.

6) Spacing charts allow for surcharge loading from equipment weighing 40,000 lbs or less, and traffic allowed no closer than 2 ft from the edge of the trench. For larger surcharge loads shore spacing shall be reduced or surcharge loads shall be kept farther away from the edges.

7) No vertical loads are to be applied to the shores.

8) Trench walls should be straight and within 20 degres of vertical. Ther should not be voids behind the shore struts. Wood blocking may be used to fill voids behind struts.

9) Trenches less than 5 ft deep may require shoring.

10) Shore rail sections may be stacked and used in any combinations provided that there is no more than 4 ft spacing between struts.

Installation Procedures

1) Complete the excavation and immediately install the system.

2) Connect the air supply to the airshore struts

3) Suspend the shore at the intended location.

4) Pressurize the system and install the pins to secure the collar of the top airshore strut. repeat the procedure progressing to next lower strut.

Removal Procedures

1) Reconnect the air supply and pressurize the system.

2) Remove pins and starting at the lowest strut and moving upward.

3) Lift the system out using appropriate lifting equipment.

REGISTERED PROFESSIONAL ENGINEER
ADRIANUS J. VERMEULEN
No. 69082
Exp. 6/30/14
CIVIL
STATE OF CALIFORNIA

DATE	REVISED	JOB NO: 13088-1
9/11/1998	3/13/2012	Sht 2 of 2

AirShore

Tabulated Data For Use in Excavations

WALER RAIL SYSTEM-8 FT, 10 FT & 12 FT Heavy Duty

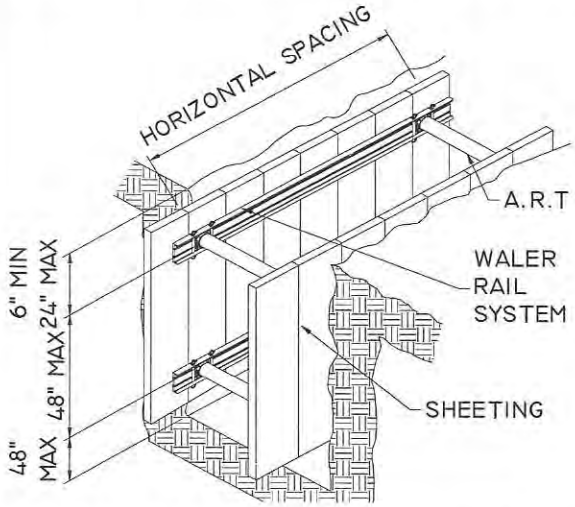

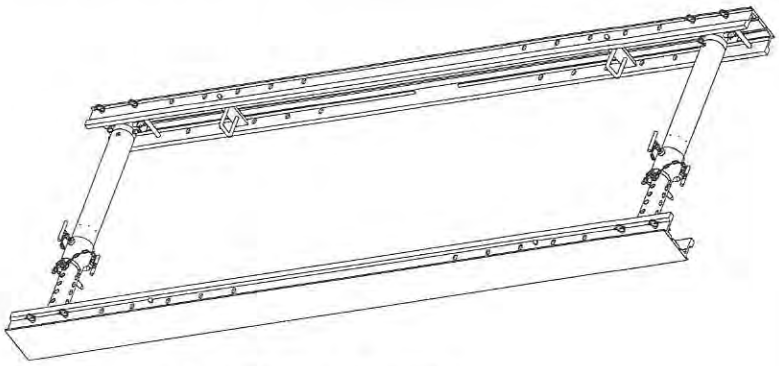

WALER RAIL SYSTEM

Recommended strut pressures (min.)			
TYPE A & B		TYPE C	
4 to 20 ft	116 PSI	4 to 20ft	116 PSI

Soil Type C-60 Installation Data

Trench Depth (Ft)	Vertical Spacing (FT)	Waler Length (FT)	Horizontal Cylinder Spacing (FT)	Allowable Trench Width (FT)
To 10	4	8' Heavy Duty	7.5	12
		10' Heavy Duty	8	12
		12' Heavy Duty	8	12
10 to 15	4	8' Heavy Duty	7.5	12
		10' Heavy Duty	8	12
		12' Heavy Duty	8	12
15 to 20	4	8' Heavy Duty	7	12
		10' Heavy Duty	8	10
		12' Heavy Duty	8	8

Soil Type C-80 Installation Data

Trench Depth (Ft)	Vertical Spacing (FT)	Waler Length (FT)	Horizontal Cylinder Spacing (FT)	Allowable Trench Width (FT)
To 10	4	8' Heavy Duty	7.5	12
		10' Heavy Duty	8	12
		12' Heavy Duty	8	12
10 to 15	4	8' Heavy Duty	7.5	12
		10' Heavy Duty	8	10
		12' Heavy Duty	8	8
15 to 20	4	8' Heavy Duty	6.5	10
		10' Heavy Duty	7	8
		12' Heavy Duty	7*	8

* NOTE: TWO PINS ARE REQUIRED

REGISTERED PROFESSIONAL ENGINEER
ADRIANUS J. VERMEULEN
No. 69082
Exp. 6/30/14
CIVIL
STATE OF CALIFORNIA

DATE	REVISED	JOB #	SHEET
9/11/1998	3/13/2012	13088-1	1 OF 2

AirShore
Tabulated Data For Use In Excavations
Waler Rail System

Notes:

1) Soil Type and shoring configuration to be determined by competent person.

2) Spacing charts are based on soil types as defined in OSHA, CFR 29 Subpart P, March 1996, Appendix A.

3) Sheeting is to be 2" thick timber lagging, or 1" thick steel plate. Sheeting is required in all cases.

4) Type C-60 soil is defined as C-soil that will stand up long enough for the shores to be installed.

5) Spacing charts allow for surcharge loading from equipment weighing 40,000 lbs or less, and traffic allowed no closer than 2 ft from the edge of the trench. For larger surcharge loads shore spacing shall be reduced or surcharge loads shall be kept farther away from the edges.

6) No vertical loads are to be applied to the shores.

7) Trench walls should be straight and within 20 degrees of vertical. There should not be voids behind the shore struts. Wood blocking may be used to fill voids behind struts.

8) Trenches less than 5 ft deep may require shoring.

9) Shore rail sections may be stacked and used in any combinations provided that there is no more than 4 ft spacing between struts.

Installation Procedures

1) Complete the excavation and immediately install the system.

2) Connect the air supply to the airshore struts.

3) Suspend the shore at the intended location.

4) Pressurize the system and install the pins to secure the collar of the top airshore strut. Repeat the procedure progressing to next lower strut.

Removal Procedures

1) Reconnect the air supply and pressurize the system.

2) Remove pins starting at the lowest strut and moving upward.

3) Lift the system out using appropriate lifting equipment.

REGISTERED PROFESSIONAL ENGINEER
ADRIANUS J. VERMEULEN
No. 69082
Exp. 6/30/14
CIVIL
STATE OF CALIFORNIA

DATE	REVISED	JOB #	SHEET
9/11/1998	3/13/2012	13088-1	2 OF 2

AirShore

Tabulated Data For Use in Excavations

WALER RAIL SYSTEM-8 FT, 6 Ft & 4 FT Heavy Duty with End Sheeting

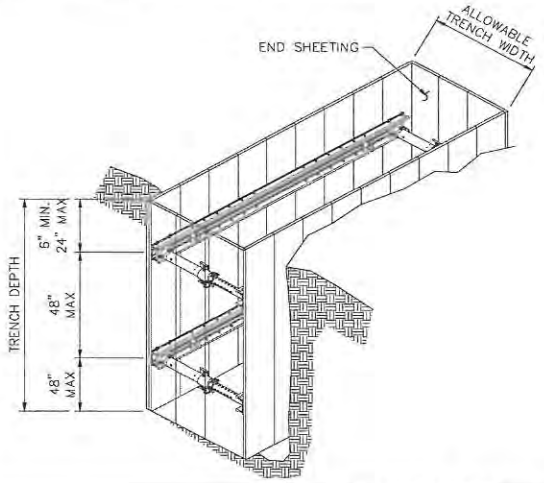

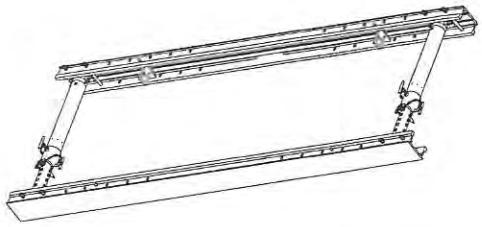

WALER RAIL SYSTEM w/ End Sheeting			
Recommended strut pressures (min.)			
TYPE A & B		TYPE C	
4 to 20 ft	116 PSI	4 to 20ft	116 PSI

Soil Type C-60 Installation Data

Trench Depth (Ft)	Vertical Spacing (FT)	Waler Length (FT)	Horizontal Cylinder Spacing (FT)	Allowable Trench Width (FT) w/ End Sheeting
To 6	4	10' Heavy Duty	8	5.5
		8' Heavy Duty	7.5	5.5
		6' Heavy Duty	6	5.5
		4' Heavy Duty	4	5.5
8	4	10' Heavy Duty	8	4.5
		8' Heavy Duty	7.5	4.5
		6' Heavy Duty	6	4.5
		4' Heavy Duty	4	4.5
10	4	10' Heavy Duty	8	4
		8' Heavy Duty	7.5	4
		6' Heavy Duty	6	4
		4' Heavy Duty	4	4
12	4	10' Heavy Duty	8	4
		8' Heavy Duty	7.5	4
		6' Heavy Duty	6	4
		4' Heavy Duty	4	4

Soil Type C-80 Installation Data

Trench Depth (Ft)	Vertical Spacing (FT)	Waler Length (FT)	Horizontal Cylinder Spacing (FT)	Allowable Trench Width (FT) w/ End Sheeting
To 6	4	10' Heavy Duty	8	4
		8' Heavy Duty	7.5	4
		6' Heavy Duty	6	4
		4' Heavy Duty	4	4
8	4	10' Heavy Duty	8	4
		8' Heavy Duty	7.5	4
		6' Heavy Duty	6	4
		4' Heavy Duty	4	4
10	4	10' Heavy Duty	8	4
		8' Heavy Duty	7.5	4
		6' Heavy Duty	6	4
		4' Heavy Duty	4	4
12	4	10' Heavy Duty	8	3
		8' Heavy Duty	7.5	3
		6' Heavy Duty	6	3
		4' Heavy Duty	4	3

REGISTERED PROFESSIONAL ENGINEER
ADRIANUS J. VERMEULEN
No. 69082
Exp. 6/30/14
CIVIL
STATE OF CALIFORNIA

REVISED	JOB #	SHEET
3/13/2012	13088-1	1 OF 2

AirShore
Tabulated Data For Use In Excavations
Waler Rail System

Notes:

1) Soil Type and shoring configuration to be determined by competent person.

2) Spacing charts are based on soil types as defined in OSHA, CFR 29 Subpart P, March 1996, Appendix A.

3) Sheeting is to be 2"x10" planks, or 1" thick steel plate, or 3/4" fin form plywood. Sheeting is required in all cases.

4) Type C-60 soil is defined as C-soil that will stand up long enough for the shores to be installed.

5) Spacing charts allow for surcharge loading from equipment weighing 40,000 lbs or less, and traffic allowed no closer than 2 ft from the edge of the trench. For larger surcharge loads shore spacing shall be reduced or surcharge loads shall be kept farther away from the edges.

6) No vertical loads are to be applied to the shores.

7) Trench walls should be straight and within 20 degrees of vertical. There should not be voids behind the shore struts. Wood blocking may be used to fill voids behind struts.

8) Trenches less than 5 ft deep may require shoring.

9) Shore rail sections may be stacked and used in any combinations provided that there is no more than 4 ft spacing between struts.

Installation Procedures

1) Complete the excavation and immediately install the system.

2) Connect the air supply to the airshore struts.

3) Suspend the shore at the intended location.

4) Pressurize the system and install the pins to secure the collar of the top airshore strut. Repeat the procedure progressing to next lower strut.

Removal Procedures

1) Reconnect the air supply and pressurize the system.

2) Remove pins and collars starting at the lowest strut and moving upward.

3) Lift the system out using appropriate lifting equipment.

REGISTERED PROFESSIONAL ENGINEER
ADRIANUS J. VERMEULEN
No. 69082
Exp. 6/30/14
CIVIL
STATE OF CALIFORNIA

REVISED	JOB #	SHEET
3/13/2012	13088-1	2 OF 2