TOSHIBA BiCD Integrated Circuit Silicon Monolithic

TBD62083APG, TBD62083AFG, TBD62083AFNG, TBD62083AFWG
TBD62084APG, TBD62084AFG, TBD62084AFNG, TBD62084AFWG

8channel sink type DMOS transistor array

TB62083A series and TB62084A series are DMOS transistor array with 8 circuits. It has a clamp diode for switching inductive loads built-in in each output. Please be careful about thermal conditions during use.

Features

- 8 circuits built-in
- High voltage : V_{OUT} = 50 V (MAX)
- High current : I_{OUT} = 500 mA/ch (MAX)
- Input voltage(output on) : TBD62083A series 2.5 V (MIN)
  TBD62084A series 7.0 V (MIN)
- Input voltage(output off) : TBD62083A series 0.6 V (MAX)
  TBD62084A series 1.0 V (MAX)
- Package : PG type P-DIP18-300-2.54-001
  FG type SOP18-P-375-1.27
  FNG type SSOP18-P-225-0.65
  FWG type P-SOP18-0812-1.27-001

TBD62083APG, TBD62084APG

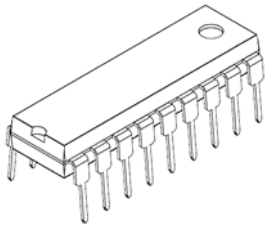

P-DIP18-300-2.54-001

TBD62083AFG, TBD62084AFG

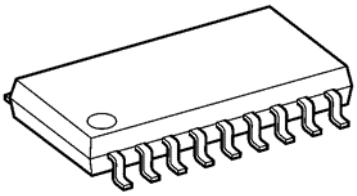

SOP18-P-375-1.27

TBD62083AFNG, TBD62084AFNG

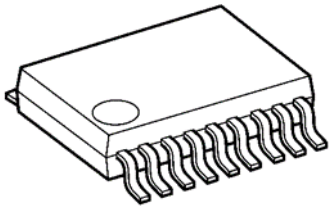

SSOP18-P-225-0.65

TBD62083AFWG, TBD62084AFWG

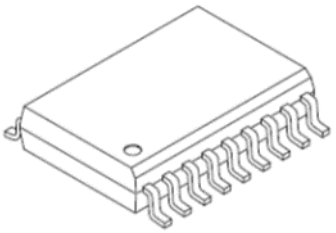

P-SOP18-0812-1.27-001

Pin connection (top view)

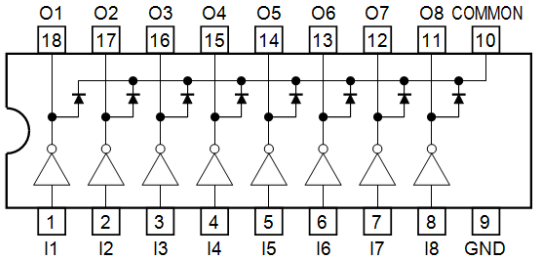

Pin connection may be simplified for explanatory purpose.

Weight
P-DIP18-300-2.54-001 : 1.3 g (Typ.)
SOP18-P-375-1.27 : 0.41 g (Typ.)
SSOP18-P-225-0.65 : 0.09 g (Typ.)
P-SOP18-0812-1.27-001 : 0.48 g (Typ.)

©2016 Toshiba Corporation

Pin explanations

Pin No.	Pin name	Function
1	I1	Input pin
2	I2	Input pin
3	I3	Input pin
4	I4	Input pin
5	I5	Input pin
6	I6	Input pin
7	I7	Input pin
8	I8	Input pin
9	GND	GND pin
10	COMMON	Common pin
11	O8	Output pin
12	O7	Output pin
13	O6	Output pin
14	O5	Output pin
15	O4	Output pin
16	O3	Output pin
17	O2	Output pin
18	O1	Output pin

Equivalent circuit (each driver)

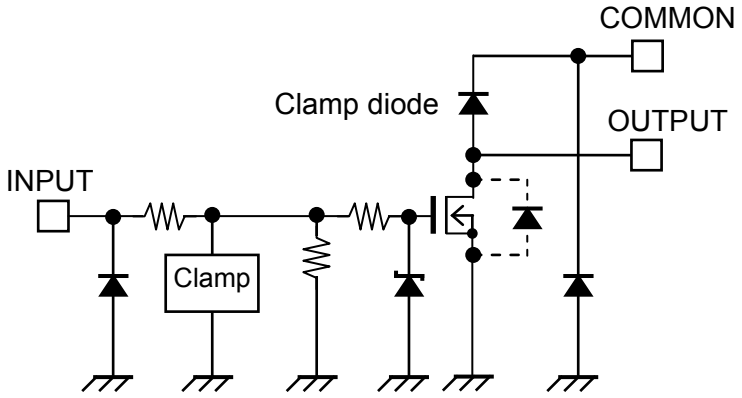

Equivalent circuit may be simplified for explanatory purpose.

Absolute Maximum Ratings (Ta = 25 °C)

Characteristics		Symbol	Rating	Unit
Output voltage		V_{OUT}	50	V
COMMON pin voltage		V_{COM}	−0.5 to 50	V
Output current		I_{OUT}	500	mA/ch
Input voltage		V_{IN}	−0.5 to 30	V
Clamp diode reverse voltage		V_R	50	V
Clamp diode forward current		I_F	500	mA
Power dissipation	PG (Note1)	P_D	1.47	W
	FG (Note2)		0.96	
	FNG (Note3)		0.96	
	FWG (Note4)		1.31	
Operating temperature		T_{opr}	−40 to 85	°C
Storage temperature		T_{stg}	−55 to 150	°C

Note1: Device alone. When Ta exceeds 25 °C, it is necessary to do the derating with 11.8 mW/°C.
Note2: Device alone. When Ta exceeds 25 °C, it is necessary to do the derating with 7.7 mW/°C.
Note3: On PCB (Size: 50 mm × 50 mm × 1.6 mm, Cu area: 40 %, single-side glass epoxy).
When Ta exceeds 25 °C, it is necessary to do the derating with 7.7 mW/°C.
Note4: On PCB (Size: 75 mm × 114 mm × 1.6 mm, Cu area: 20 %, single-side glass epoxy).
When Ta exceeds 25 °C, it is necessary to do the derating with 10.48 mW/°C.

Operating Ranges (Ta = −40 to 85 °C)

Characteristics		Symbol	Condition		Min	Typ.	Max	Unit
Output voltage		V_{OUT}	—		—	—	50	V
COMMON pin voltage		V_{COM}	—		0	—	50	V
Output current	PG (Note1)	I_{OUT}	1 circuits ON, Ta = 25°C		0	—	400	mA/ch
			t_{pw} = 25 ms, 8 circuits ON, Ta = 85°C, T_j = 120°C	Duty = 10%	0	—	390	
				Duty = 50%	0	—	170	
	FG (Note1)		1 circuits ON, Ta = 25°C		0	—	400	
			t_{pw} = 25 ms, 8 circuits ON, Ta = 85°C, T_j = 120°C	Duty = 10%	0	—	320	
				Duty = 50%	0	—	140	
	FNG (Note2)		1 circuits ON, Ta = 25°C		0	—	400	
			t_{pw} = 25 ms, 8 circuits ON, Ta = 85°C, T_j = 120°C	Duty = 10%	0	—	320	
				Duty = 50%	0	—	140	
	FWG (Note3)		1 circuits ON, Ta = 25°C		0	—	400	
			t_{pw} = 25 ms, 8 circuits ON, Ta = 85°C, T_j = 120°C	Duty = 10%	0	—	370	
				Duty = 50%	0	—	160	
Input voltage (Output on)	TBD62083A series	V_{IN} (ON)	I_{OUT} = 100 mA or upper, V_{OUT} = 2 V		2.5	—	25	V
	TBD62084A series		I_{OUT} = 100 mA or upper, V_{OUT} = 2 V		7.0	—	25	
Input voltage (Output off)	TBD62083A series	V_{IN} (OFF)	I_{OUT} = 100 μA or less, V_{OUT} = 2 V		0	—	0.6	V
	TBD62084A series		I_{OUT} = 100 μA or less, V_{OUT} = 2 V		0	—	1.0	
Clamp diode forward current		I_F	—		—	—	400	mA

Note1: Device alone.
Note2: On PCB (Size: 50 mm × 50 mm × 1.6 mm, Cu area: 40%, single-side glass epoxy).
Note3: On PCB (Size: 75 mm × 114 mm × 1.6 mm, Cu area: 20%, single-side glass epoxy).

Electrical Characteristics (Ta = 25°C unless otherwise noted)

Characteristics		Symbol	Test Circuit	Condition	Min	Typ.	Max	Unit
Output leakage current		I_{leak}	1	V_{OUT} = 50V, Ta = 85°C V_{IN} = 0 V	—	—	1.0	μA
Output voltage (Output ON-resistance)	TBD62083A series	V_{DS} (R_{ON})	2	I_{OUT} = 350 mA, V_{IN} =5.0V	—	0.7 (2.0)	1.14 (3.25)	V (Ω)
				I_{OUT} = 200 mA, V_{IN} =5.0V	—	0.4 (2.0)	0.65 (3.25)	
				I_{OUT} = 100 mA, V_{IN} =5.0V	—	0.2 (2.0)	0.325 (3.25)	
	TBD62084A series			I_{OUT} = 350 mA, V_{IN} =7.0V	—	0.7 (2.0)	1.14 (3.25)	
				I_{OUT} = 200 mA, V_{IN} =7.0V	—	0.4 (2.0)	0.65 (3.25)	
				I_{OUT} = 100 mA, V_{IN} =7.0V	—	0.2 (2.0)	0.325 (3.25)	
Input current (Output on)	TBD62083A series	$I_{IN\ (ON)}$	3	V_{IN} = 2.5 V	—	—	0.1	mA
	TBD62084A series			V_{IN} = 7.0 V	—	—	0.5	
Input current(Output off)		$I_{IN\ (OFF)}$	4	V_{IN} = 0 V, Ta = 85°C	—	—	1.0	μA
Input voltage (Output on)	TBD62083A series	$V_{IN\ (ON)}$	5	I_{OUT} = 100 mA, V_{OUT} = 2 V	—	—	2.5	V
	TBD62084A series				—	—	7.0	
Clamp diode reverse current		I_R	6	V_R = 50 V, Ta = 85°C	—	—	1.0	μA
Clamp diode forward voltage		V_F	7	I_F = 350 mA	—	—	2.0	V
Turn−on delay		t_{ON}	8	V_{OUT} = 50 V R_L = 125 Ω C_L = 15 pF	—	0.4	—	μs
Turn−off delay		t_{OFF}			—	0.8	—	

Test circuit

1. I_{leak}

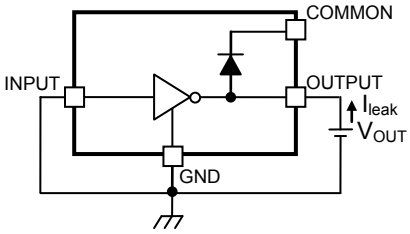

2. V_{DS} (R_{ON})

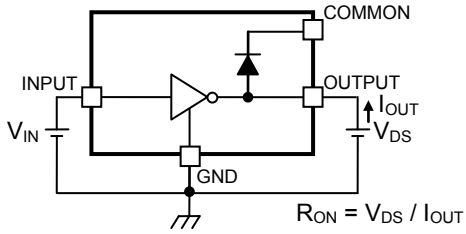

3. $I_{IN\ (ON)}$

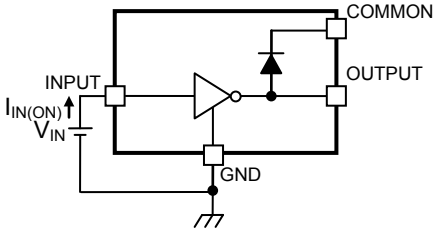

4. $I_{IN\ (OFF)}$

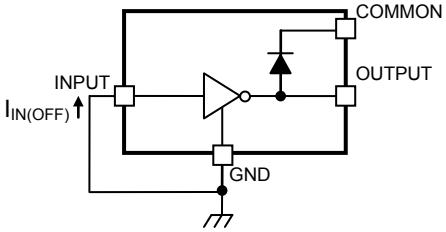

5. $V_{IN\ (ON)}$

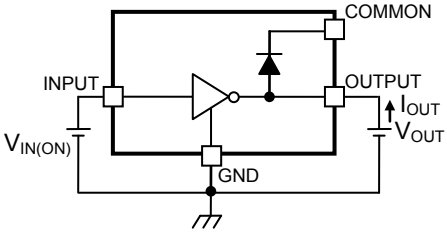

6. I_R

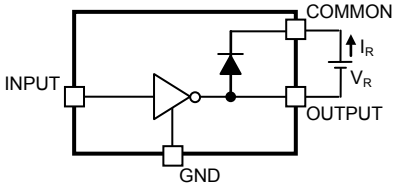

7. V_F

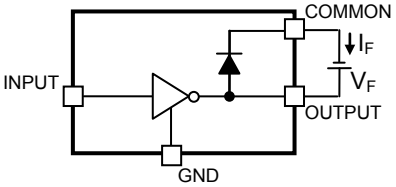

Test circuit may be simplified for explanatory purpose.

8. t_{ON}, t_{OFF}

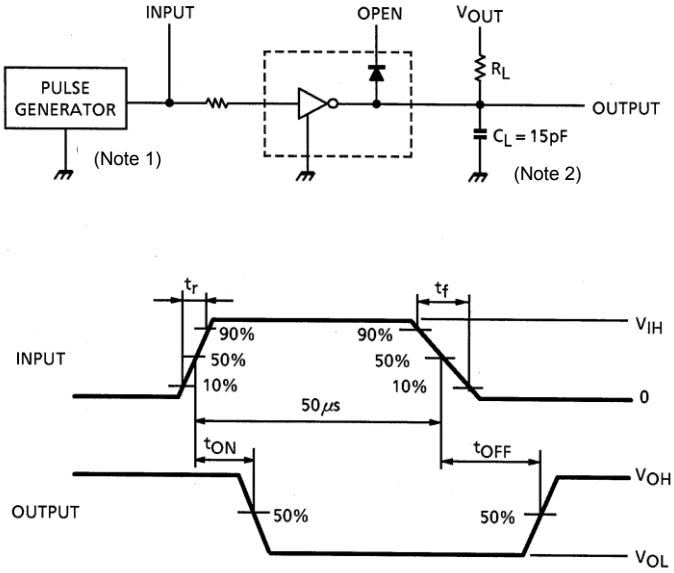

Note 1: Pulse width 50 μs, Duty cycle 10%

Output impedance 50 Ω, $t_r \leq 5$ ns, $t_f \leq 10$ ns
Please refer to the following table for the VIH condition.

Product	V_{IH}
TBD62083A series	5.0 V
TBD62084A series	7.0 V

Note 2: C_L includes the probe and the test board capacitance.

Test circuit and timing chart may be simplified for explanatory purpose.

Precautions for Using

This IC does not include built-in protection circuits for excess current or overvoltage.
If this IC is subjected to excess current or overvoltage, it may be destroyed.
Hence, the utmost care must be taken when systems which incorporate this IC are designed.
Utmost care is necessary in the design of the output line, COMMON and GND line since IC may be destroyed due to short−circuit between outputs, air contamination fault, or fault by improper grounding.

Package Dimensions

P-DIP18-300-2.54-001 Unit: mm

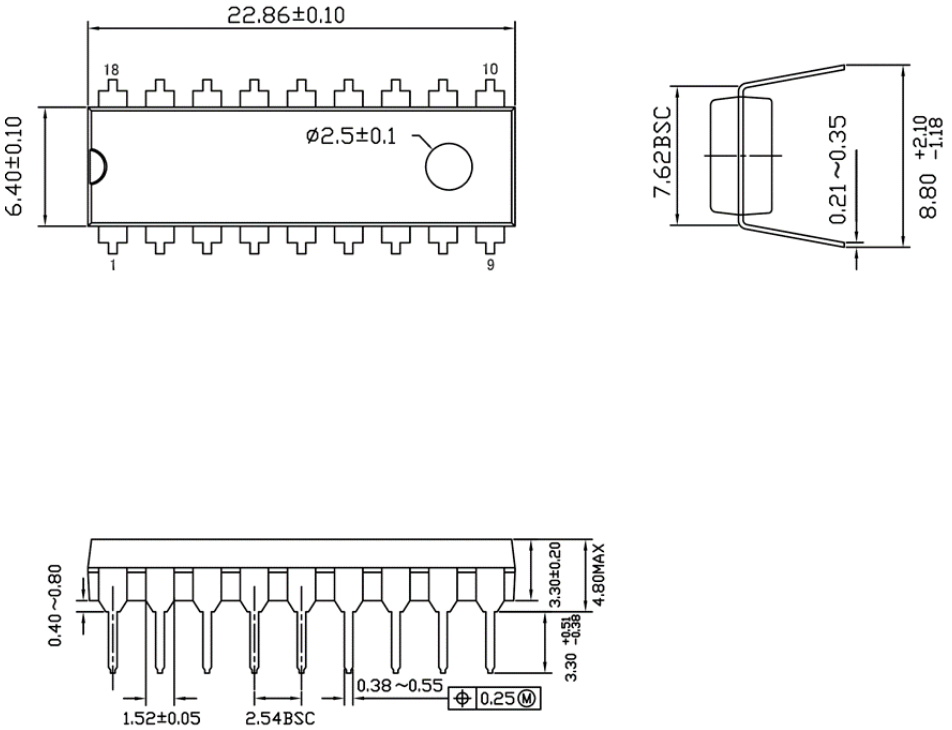

Weight: 1.3 g (Typ.)

SOP18-P-375-1.27 Unit: mm

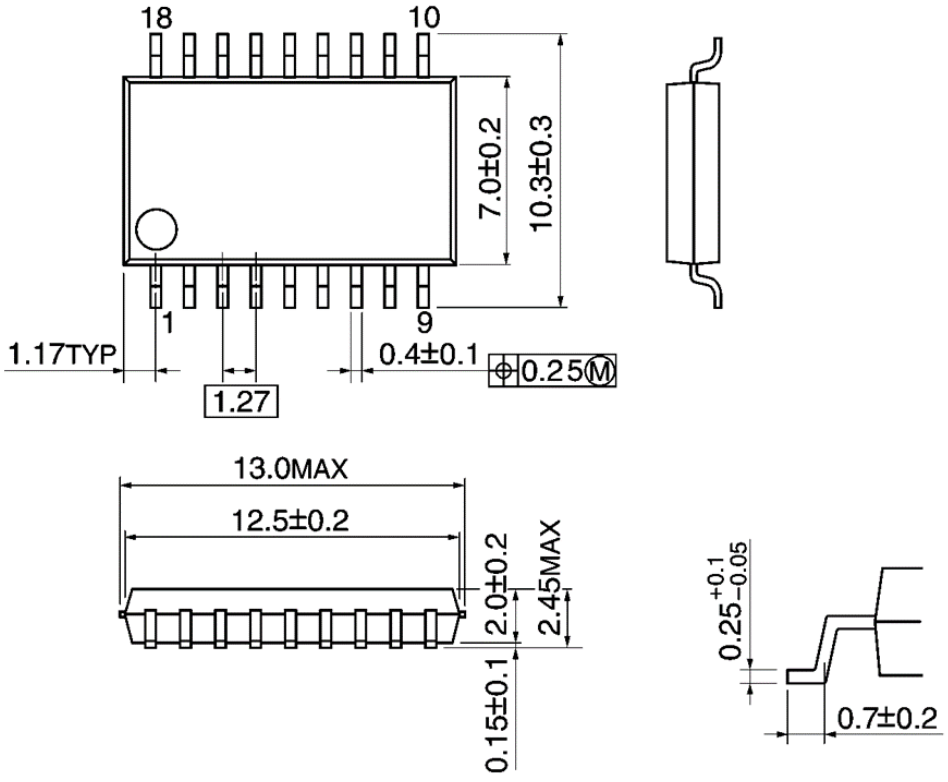

Weight: 0.41 g (Typ.)

SSOP18-P-225-0.65 Unit: mm

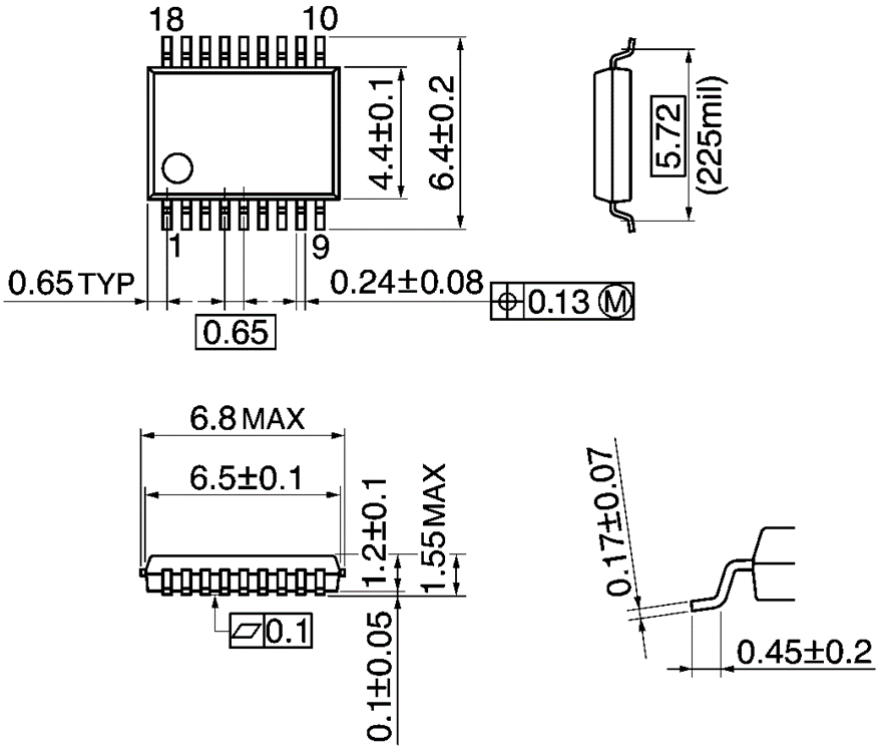

Weight: 0.09 g (Typ.)

P-SOP18-0812-1.27-001 Unit: mm

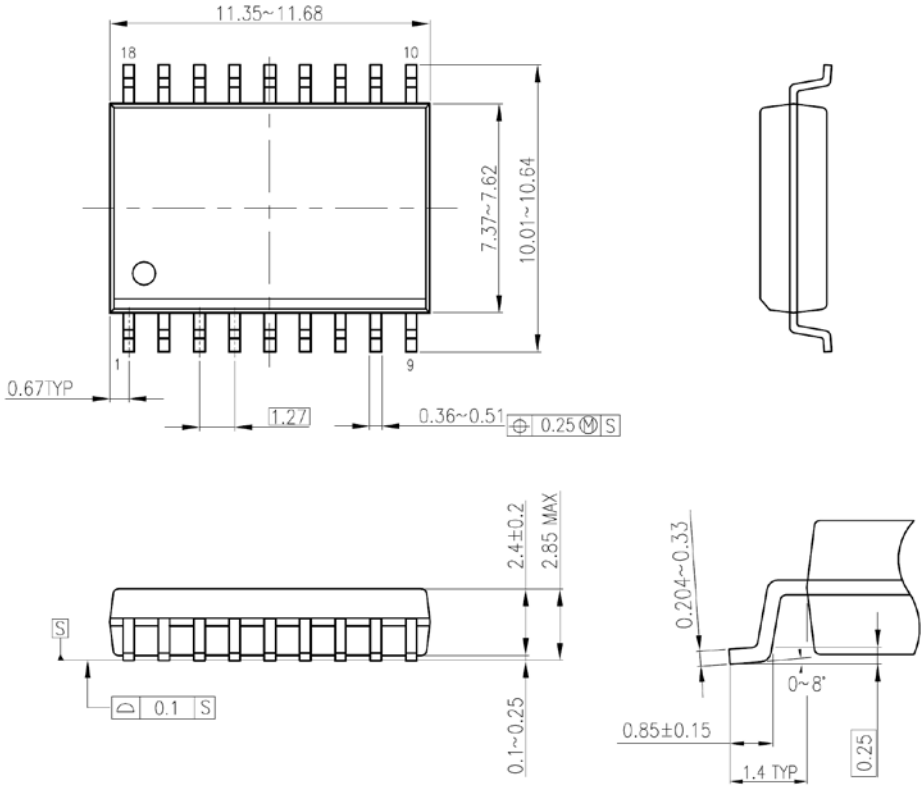

Weight: 0.48 g (Typ.)

Notes on Contents

1. **Pin connection**
   Pin connection may be simplified for explanatory purpose.
2. **Equivalent Circuits**
   Equivalent circuit may be simplified for explanatory purpose.
3. **Test circuit**
   Test circuit may be simplified for explanatory purpose.
4. **Timing chart**
   Timing charts may be simplified for explanatory purposes.

IC Usage Considerations

Notes on handling of ICs

(1) The absolute maximum ratings of a semiconductor device are a set of ratings that must not be exceeded, even for a moment. Do not exceed any of these ratings.Exceeding the rating(s) may cause device breakdown, damage or deterioration, and may result in injury by explosion or combustion.

(2) Do not insert devices in the wrong orientation or incorrectly.Make sure that the positive and negative terminals of power supplies are connected properly.Otherwise, the current or power consumption may exceed the absolute maximum rating, and exceeding the rating(s) may cause device breakdown, damage or deterioration, and may result in injury by explosion or combustion.In addition, do not use any device inserted in the wrong orientation or incorrectly to which current is applied even just once.

(3) Use an appropriate power supply fuse to ensure that a large current does not continuously flow in the case of overcurrent and/or IC failure. The IC will fully break down when used under conditions that exceed its absolute maximum ratings, when the wiring is routed improperly or when an abnormal pulse noise occurs from the wiring or load, causing a large current to continuously flow and the breakdown can lead to smoke or ignition. To minimize the effects of the flow of a large current in the case of breakdown, appropriate settings, such as fuse capacity, fusing time and insertion circuit location, are required.

(4) If your design includes an inductive load such as a motor coil, incorporate a protection circuit into the design to prevent device malfunction or breakdown caused by the current resulting from the inrush current at power ON or the negative current resulting from the back electromotive force at power OFF. IC breakdown may cause injury, smoke or ignition.Use a stable power supply with ICs with built-in protection functions. If the power supply is unstable, the protection function may not operate, causing IC breakdown. IC breakdown may cause injury, smoke or ignition.

(5) Carefully select external components (such as inputs and negative feedback capacitors) and load components (such as speakers), for example, power amp and regulator.If there is a large amount of leakage current such as from input or negative feedback condenser, the IC output DC voltage will increase. If this output voltage is connected to a speaker with low input withstand voltage, overcurrent or IC failure may cause smoke or ignition. (The overcurrent may cause smoke or ignition from the IC itself.) In particular, please pay attention when using a Bridge Tied Load (BTL) connection-type IC that inputs output DC voltage to a speaker directly.

Points to remember on handling of ICs

Heat Radiation Design

When using an IC with large current flow such as power amp, regulator or driver, design the device so that heat is appropriately radiated, in order not to exceed the specified junction temperature (TJ) at any time or under any condition. These ICs generate heat even during normal use. An inadequate IC heat radiation design can lead to decrease in IC life, deterioration of IC characteristics or IC breakdown. In addition, when designing the device, take into consideration the effect of IC heat radiation with peripheral components.

Back-EMF

When a motor rotates in the reverse direction,stops or slows abruptly, current flows back to the motor's power supply owing to the effect of back-EMF. If the current sink capability of the power supply is small, the device's motor power supply and output pins might be exposed to conditions beyond theabsolute maximum ratings. To avoid this problem, take the effect of back-EMF into consideration in system design.

RESTRICTIONS ON PRODUCT USE

- Toshiba Corporation, and its subsidiaries and affiliates (collectively "TOSHIBA"), reserve the right to make changes to the information in this document, and related hardware, software and systems (collectively "Product") without notice.

- This document and any information herein may not be reproduced without prior written permission from TOSHIBA. Even with TOSHIBA's written permission, reproduction is permissible only if reproduction is without alteration/omission.

- Though TOSHIBA works continually to improve Product's quality and reliability, Product can malfunction or fail. Customers are responsible for complying with safety standards and for providing adequate designs and safeguards for their hardware, software and systems which minimize risk and avoid situations in which a malfunction or failure of Product could cause loss of human life, bodily injury or damage to property, including data loss or corruption. Before customers use the Product, create designs including the Product, or incorporate the Product into their own applications, customers must also refer to and comply with (a) the latest versions of all relevant TOSHIBA information, including without limitation, this document, the specifications, the data sheets and application notes for Product and the precautions and conditions set forth in the "TOSHIBA Semiconductor Reliability Handbook" and (b) the instructions for the application with which the Product will be used with or for. Customers are solely responsible for all aspects of their own product design or applications, including but not limited to (a) determining the appropriateness of the use of this Product in such design or applications; (b) evaluating and determining the applicability of any information contained in this document, or in charts, diagrams, programs, algorithms, sample application circuits, or any other referenced documents; and (c) validating all operating parameters for such designs and applications. **TOSHIBA ASSUMES NO LIABILITY FOR CUSTOMERS' PRODUCT DESIGN OR APPLICATIONS.**

- **PRODUCT IS NEITHER INTENDED NOR WARRANTED FOR USE IN EQUIPMENTS OR SYSTEMS THAT REQUIRE EXTRAORDINARILY HIGH LEVELS OF QUALITY AND/OR RELIABILITY, AND/OR A MALFUNCTION OR FAILURE OF WHICH MAY CAUSE LOSS OF HUMAN LIFE, BODILY INJURY, SERIOUS PROPERTY DAMAGE AND/OR SERIOUS PUBLIC IMPACT ("UNINTENDED USE").** Except for specific applications as expressly stated in this document, Unintended Use includes, without limitation, equipment used in nuclear facilities, equipment used in the aerospace industry, medical equipment, equipment used for automobiles, trains, ships and other transportation, traffic signaling equipment, equipment used to control combustions or explosions, safety devices, elevators and escalators, devices related to electric power, and equipment used in finance-related fields. **IF YOU USE PRODUCT FOR UNINTENDED USE, TOSHIBA ASSUMES NO LIABILITY FOR PRODUCT.** For details, please contact your TOSHIBA sales representative.

- Do not disassemble, analyze, reverse-engineer, alter, modify, translate or copy Product, whether in whole or in part.

- Product shall not be used for or incorporated into any products or systems whose manufacture, use, or sale is prohibited under any applicable laws or regulations.

- The information contained herein is presented only as guidance for Product use. No responsibility is assumed by TOSHIBA for any infringement of patents or any other intellectual property rights of third parties that may result from the use of Product. No license to any intellectual property right is granted by this document, whether express or implied, by estoppel or otherwise.

- **ABSENT A WRITTEN SIGNED AGREEMENT, EXCEPT AS PROVIDED IN THE RELEVANT TERMS AND CONDITIONS OF SALE FOR PRODUCT, AND TO THE MAXIMUM EXTENT ALLOWABLE BY LAW, TOSHIBA (1) ASSUMES NO LIABILITY WHATSOEVER, INCLUDING WITHOUT LIMITATION, INDIRECT, CONSEQUENTIAL, SPECIAL, OR INCIDENTAL DAMAGES OR LOSS, INCLUDING WITHOUT LIMITATION, LOSS OF PROFITS, LOSS OF OPPORTUNITIES, BUSINESS INTERRUPTION AND LOSS OF DATA, AND (2) DISCLAIMS ANY AND ALL EXPRESS OR IMPLIED WARRANTIES AND CONDITIONS RELATED TO SALE, USE OF PRODUCT, OR INFORMATION, INCLUDING WARRANTIES OR CONDITIONS OF MERCHANTABILITY, FITNESS FOR A PARTICULAR PURPOSE, ACCURACY OF INFORMATION, OR NONINFRINGEMENT.**

- Do not use or otherwise make available Product or related software or technology for any military purposes, including without limitation, for the design, development, use, stockpiling or manufacturing of nuclear, chemical, or biological weapons or missile technology products (mass destruction weapons). Product and related software and technology may be controlled under the applicable export laws and regulations including, without limitation, the Japanese Foreign Exchange and Foreign Trade Law and the U.S. Export Administration Regulations. Export and re-export of Product or related software or technology are strictly prohibited except in compliance with all applicable export laws and regulations.

- Please contact your TOSHIBA sales representative for details as to environmental matters such as the RoHS compatibility of Product. Please use Product in compliance with all applicable laws and regulations that regulate the inclusion or use of controlled substances, including without limitation, the EU RoHS Directive. **TOSHIBA ASSUMES NO LIABILITY FOR DAMAGES OR LOSSES OCCURRING AS A RESULT OF NONCOMPLIANCE WITH APPLICABLE LAWS AND REGULATIONS.**