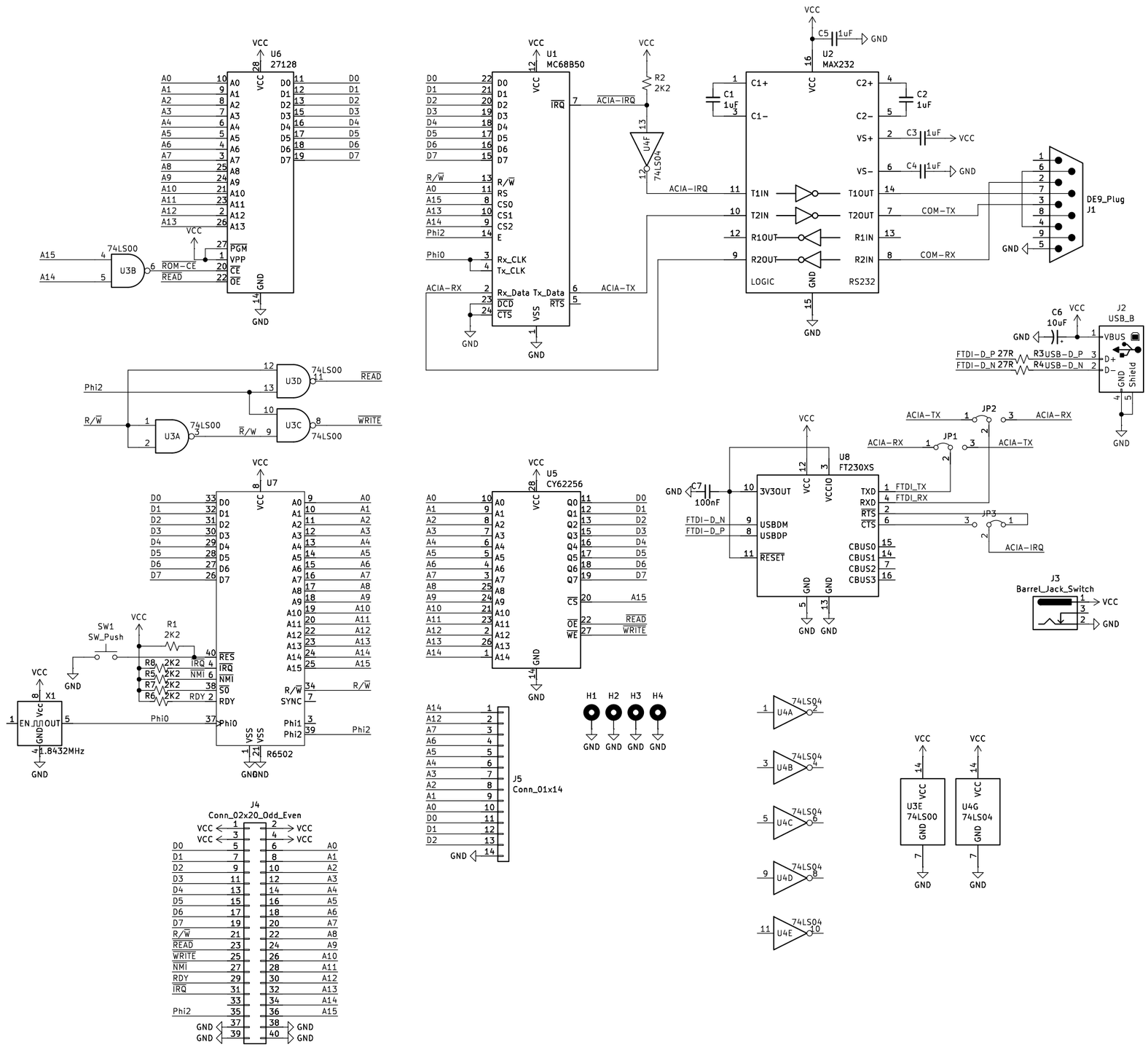

techav

Sheet: /

File: Minimal-6502.kicad_sch

Title: Minimal 6502

Size: B	Date: 2024-05-27	**Rev:**
KiCad E.D.A. 8.0.1		Id: 1/1