Marwadi University	**Marwadi University** **Faculty of Engineering and Technology** **Department of Information and Communication Technology**	
Subject: Digital Design using Verilog (01CT1619)	**Aim:** Write the Verilog code for following latches, (i) SR latch and (ii) D latch	
Experiment No: 10	**Date:**	**Enrollment No: 92301733025**

Aim: Write the Verilog code for following latches,(i) SR latch and (ii) D latch

IDE: EDA Playground

Theory:

A **Latch** is a special type of logical circuit. The latches have **low** and **high** two stable states. Due to these states, latches also refer to as **bistable-multivibrators**. A latch is a storage device that holds the data using the feedback lane. The latch stores 1 -bit until the device set to 1. The latch changes the stored data and constantly trials the inputs when the enable input set to 1.

Based on the enable signal, the circuit works in two states. When the enable input is high, then both the inputs are low, and when the enable input is low, both the inputs are high.

Types of Latches

There are various types of latches used in digital circuits which are as follows:

(i) SR Latch
(ii) D Latch
(iii) JK Latch
(iv) T Latch
(v) Gated SR Latch
(vi) Gated D latch

SR Latch

The SR latch is a special type of asynchronous device which works separately for control signals. It depends on the S-states and R-inputs. The SR latch design by connecting two **NOR** gates with a cross loop connection. The SR latch can also be designed using the NAND gate. Below are the circuit diagram and the truth table of the SR latch

Marwadi University	**Marwadi University** **Faculty of Engineering and Technology** **Department of Information and Communication Technology**	
Subject: Digital Design using Verilog (01CT1619)	**Aim:** Write the Verilog code for following latches, (i) SR latch and (ii) D latch	
Experiment No: 10	**Date:**	**Enrollment No: 92301733025**

Truth Table

S	R	Q	Q'
0	0	latch	Latch
0	1	0	1
1	0	1	0
1	1	0	0

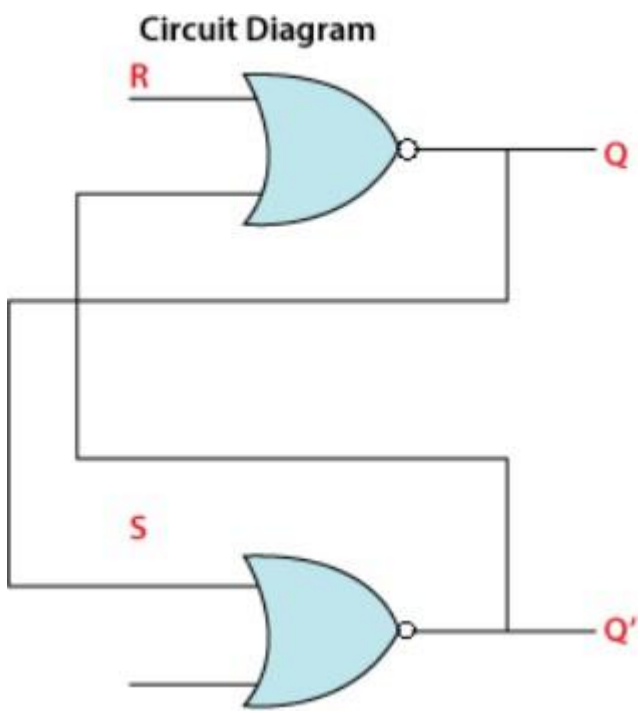

D Latch

The **D latch** is the same as D flip flop. The only difference between these two is **the ENABLE** input. The output of the latch is the same as the input passed to the **Data** input when the **ENABLE** input set to 1. At that time, the latch is open, and the path is transparent from input to output. If the **ENABLE** input is set to 0, the D latch's output is the last value of the latch, i.e., independent from the input D, and the latch is closed. Below are the circuit diagram and the truth table of the D latch.

Marwadi University	**Marwadi University** **Faculty of Engineering and Technology** **Department of Information and Communication Technology**	
Subject: Digital Design using Verilog (01CT1619)	**Aim:** Write the Verilog code for following latches, (i) SR latch and (ii) D latch	
Experiment No: 10	**Date:**	**Enrollment No: 92301733025**

Truth Table

E	D	Q	Q'
0	0	latch	latch
0	1	latch	latch
1	0	0	1
1	1	1	0

Circuit Diagram

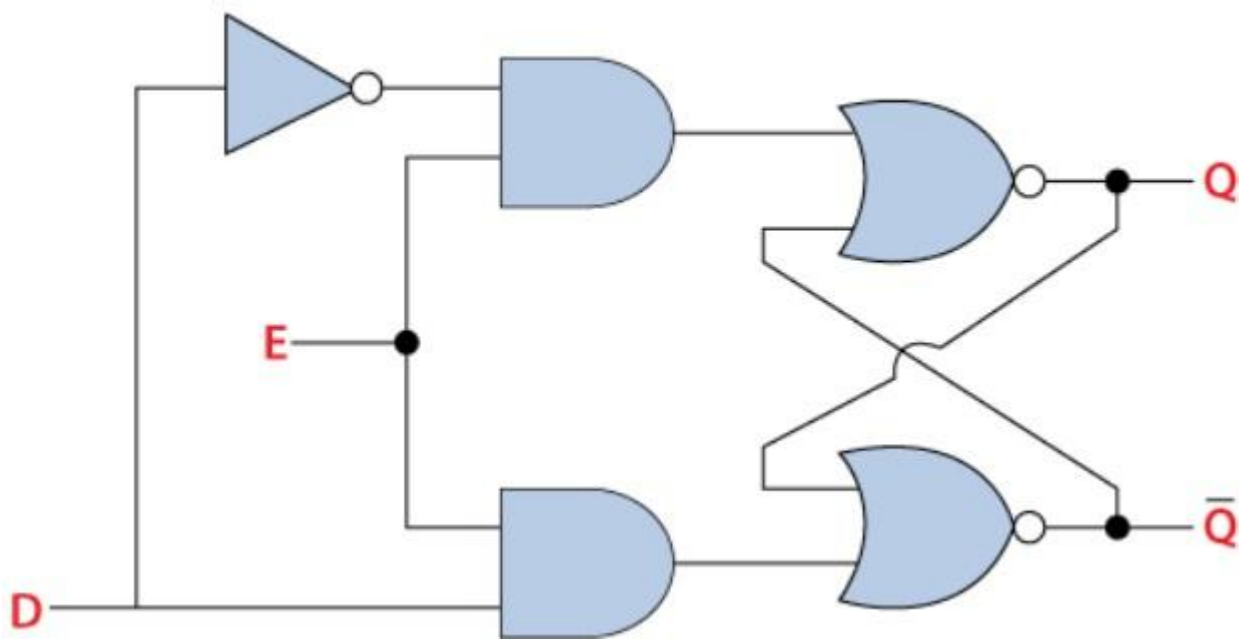

Marwadi University	**Marwadi University** **Faculty of Engineering and Technology** **Department of Information and Communication Technology**	
Subject: Digital Design using Verilog (01CT1619)	**Aim:** Write the Verilog code for following latches, (i) SR latch and (ii) D latch	
Experiment No: 10	**Date:**	**Enrollment No: 92301733025**

Pre Lab Exercise:

a. What is Latches?
A latch is a basic digital memory device used to store one bit of information. It is a type of bistable circuit, which means it has two stable states (0 or 1). A latch can hold its output value until the input signal changes. Latches are level-sensitive devices, meaning their output changes when the input is active. They are commonly used in sequential circuits to store data temporarily.

b. what is need of latches?
Latches are needed to store data in digital circuits. They help in maintaining a particular state until new input is given. Latches are useful when temporary storage of information is required. They also help in synchronization and controlling the flow of data in sequential logic circuits. Without latches, circuits would not be able to remember previous outputs.

c. How latch are useful in any logic circuit?
Latches are useful in logic circuits because they provide memory. They can store output values and use them later in the circuit operation. Latches are used in registers, flip-flops, counters, and memory units. They help in designing sequential circuits where the output depends on both present input and previous output. Thus, latches are important building blocks in digital electronic systems.

Verilog Code for SR Latch:

```
// SR Latch using NOR gates
module sr_latch(
    input S,
    input R,
    output Q,
    output Qbar
);

assign Q    = ~(R | Qbar);
assign Qbar = ~(S | Q);

endmodule
```

Marwadi University	**Marwadi University** **Faculty of Engineering and Technology** **Department of Information and Communication Technology**	
Subject: Digital Design using Verilog (01CT1619)	**Aim:** Write the Verilog code for following latches, (i) SR latch and (ii) D latch	
Experiment No: 10	**Date:**	**Enrollment No: 92301733025**

Test-bench for SR Latch:

```
module tb_sr_latch;

reg S, R;
wire Q, Qbar;

// instantiate module
sr_latch uut(
    .S(S),
    .R(R),
    .Q(Q),
    .Qbar(Qbar)
);

initial
begin

$display("S R | Q Qbar");

// initial state
S = 0; R = 0; #10;
$display("%b %b | %b %b", S, R, Q, Qbar);

// Set condition
S = 1; R = 0; #10;
$display("%b %b | %b %b", S, R, Q, Qbar);

// Hold condition
S = 0; R = 0; #10;
$display("%b %b | %b %b", S, R, Q, Qbar);

// Reset condition
S = 0; R = 1; #10;
```

Results for SR Latch:

```
S R | Q Qbar
0 0 | x x
1 0 | 1 0
0 0 | 1 0
0 1 | 0 1
0 0 | 0 1
1 1 | 0 0
```

Marwadi University	**Marwadi University** **Faculty of Engineering and Technology** **Department of Information and Communication Technology**	
Subject: Digital Design using Verilog (01CT1619)	**Aim:** Write the Verilog code for following latches, (i) SR latch and (ii) D latch	
Experiment No: 10	**Date:**	**Enrollment No: 92301733025**

Observation and Result Analysis:

The SR latch was successfully designed and simulated using Verilog HDL in EDA Playground. The circuit stores one bit of data and operates based on the Set (S) and Reset (R) inputs. When S = 1, the output is set to 1, and when R = 1, the output is reset to 0. When both inputs are 0, the latch holds the previous state, showing its memory property. The simulation results verified the correct working of the SR latch, proving that it is an important basic building block in sequential logic circuits such as flip-flops, registers, and memory units.

Post Lab Exercise:

a. Write verilog code, test bench and output for T latch

Verilog Code:

```
// T Latch Design
module t_latch(
    input T,
    input enable,
    output reg Q
);

always @(*)
begin
    if(enable)
    begin
        if(T == 1'b0)
            Q = Q;      // Hold previous value
        else
            Q = ~Q;     // Toggle
    end
end

endmodule
```

Testbench:

Marwadi University	**Marwadi University** **Faculty of Engineering and Technology** **Department of Information and Communication Technology**	
Subject: Digital Design using Verilog (01CT1619)	**Aim:** Write the Verilog code for following latches, (i) SR latch and (ii) D latch	
Experiment No: 10	**Date:**	**Enrollment No: 92301733025**

```
module tb_t_latch;

reg T;
reg enable;
wire Q;

// instantiate module
t_latch uut(
    .T(T),
    .enable(enable),
    .Q(Q)
);

initial
begin

$display("Enable T | Q");

enable = 1; T = 0; #10;
$display("%b      %b | %b", enable, T, Q);

enable = 1; T = 1; #10;
$display("%b      %b | %b", enable, T, Q);

enable = 1; T = 1; #10;
$display("%b      %b | %b", enable, T, Q);

enable = 1; T = 0; #10;
$display("%b      %b | %b", enable, T, Q);

enable = 0; T = 1; #10;
$display("%b      %b | %b", enable, T, Q);
```

Results:

```
Enable T | Q
1      0 | x
1      1 | x
1      1 | x
1      0 | x
0      1 | x
```

Marwadi University	**Marwadi University** **Faculty of Engineering and Technology** **Department of Information and Communication Technology**	
Subject: Digital Design using Verilog (01CT1619)	**Aim:** Write the Verilog code for following latches, (i) SR latch and (ii) D latch	
Experiment No: 10	**Date:**	**Enrollment No: 92301733025**

b. Write Verilog code, test bench and output for JK -Latch

Verilog Code:

```
// JK Latch Design
module jk_latch(
    input J,
    input K,
    input enable,
    output reg Q
);

always @(*)
begin
    if(enable)
    begin
        case({J,K})

            2'b00: Q = Q;       // Hold
            2'b01: Q = 1'b0;    // Reset
            2'b10: Q = 1'b1;    // Set
            2'b11: Q = ~Q;      // Toggle

        endcase
    end
end

endmodule
```

Testbench:

```
module tb_jk_latch;

reg J, K;
reg enable;
wire Q;

// instantiate module
jk_latch uut(
    .J(J),
    .K(K),
    .enable(enable),
    .Q(Q)
);

initial
begin

$display("Enable J K | Q");

// Hold
enable = 1; J = 0; K = 0; #10;
$display("%b      %b %b | %b", enable, J, K, Q);

// Reset
enable = 1; J = 0; K = 1; #10;
$display("%b      %b %b | %b", enable, J, K, Q);

// Set
enable = 1; J = 1; K = 0; #10;
$display("%b      %b %b | %b", enable, J, K, Q);
```

Marwadi University	**Marwadi University** **Faculty of Engineering and Technology** **Department of Information and Communication Technology**	
Subject: Digital Design using Verilog (01CT1619)	**Aim:** Write the Verilog code for following latches, (i) SR latch and (ii) D latch	
Experiment No: 10	**Date:**	**Enrollment No: 92301733025**

Results:

```
Enable J K | Q
1      0 0 | x
1      0 1 | 0
1      1 0 | 1
1      1 1 | 0
1      1 1 | 0
0      1 0 | 0
```