Marwadi University	**Marwadi University** **Faculty of Engineering and Technology** **Department of Information and Communication Technology**	
Subject: Digital Design using Verilog (01CT1619)	**Aim:** Write the Verilog code for designing 1 bit half adder and full adder circuit.	
Experiment No: 03	**Date:**	**Enrollment No: 92301733025**

Aim: Write the Verilog code for designing 1 bit half adder and full adder circuit.

IDE: EDA Playground

Theory:

Half adder

It adds two binary digits where the input bits are termed as augend and addend and the result will be two outputs one is the sum and the other is carry. To perform the sum operation, XOR is applied to both the inputs, and AND gate is applied to both inputs to produce carry.

Sum= A XOR B

Carry = A AND B

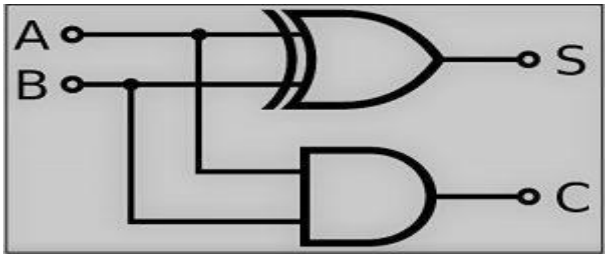

INPUTS		OUTPUTS	
A	B	SUM	CARRY
0	0	0	0
0	1	1	0
1	0	1	0
1	1	0	1

Full Adder

Full-adder has three inputs and two outputs, he first two inputs are A and B and the third input is an input carry as C-IN. When a full-adder logic is designed, you string eight of them together to create a byte-wide adder and cascade the carry bit from one adder to the next.

Sum = $(A \oplus B) \oplus C_{in}$

Carry = $A.B + (A \oplus B)$

Marwadi University	**Marwadi University** **Faculty of Engineering and Technology** **Department of Information and Communication Technology**	
Subject: Digital Design using Verilog (01CT1619)	**Aim:** Write the Verilog code for designing 1 bit half adder and full adder circuit.	
Experiment No: 03	**Date:**	**Enrollment No: 92301733025**

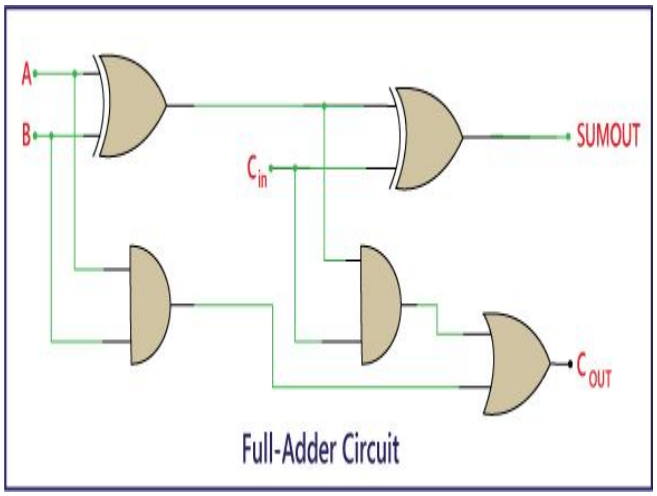

Inputs			Outputs	
A	B	C_{in}	Sum	Carry
0	0	0	0	0
0	0	1	1	0
0	1	0	1	0
0	1	1	0	1
1	0	0	1	0
1	0	1	0	1
1	1	0	0	1
1	1	1	1	1

Pre Lab Exercise:

a. What is use of adder in processor?

An adder is used in a processor to perform arithmetic operations, mainly addition of binary numbers. It is a fundamental part of the Arithmetic Logic Unit (ALU). Adders are used for operations such as addition, subtraction (using 2's complement), address calculation, incrementing program counter, and performing various mathematical computations required during instruction execution.

b. What is limitation of half adder?

The main limitation of a half adder is that it cannot handle carry input from a previous stage. It can only add two single binary bits and produce sum and carry output. Therefore, it is not suitable for adding multi-bit binary numbers directly, because carry from previous bit addition cannot be included.

c. How many AND, OR and EXOR gates are required for the configuration of full adder?

A full adder requires:

- 2 AND gates
- 1 OR gate
- 2 EXOR (XOR) gates

Marwadi University	**Marwadi University** **Faculty of Engineering and Technology** **Department of Information and Communication Technology**	
Subject: Digital Design using Verilog (01CT1619)	**Aim:** Write the Verilog code for designing 1 bit half adder and full adder circuit.	
Experiment No: 03	**Date:**	**Enrollment No: 92301733025**

Verilog Code:

Half Adder:

design.sv

```
// Code your design here

module half_adder(input a, input b, output sum, output cout);
  xor(sum, a, b);
  and(cout, a, b);
endmodule
```

Full Adder:

design.sv

```
// Code your design here
module full_adder(
  input a,b,cin,
  output sum, cout
);

  xor(sum, a, b, cin);
  assign cout= (a&b) | cin & (a^b);
endmodule
```

Test-bench:

Half Adder:

testbench.sv

```
// Code your testbench here
// or browse Examples
// `timescale 1ns / 1ps
module half_adder_tb();
  reg a, b;
  wire sum, cout;
  half_adder uut(a, b, sum, cout);

  initial begin
    $dumpfile("half_adder.vcd");
    $dumpvars(0, half_adder_tb);
  end

  initial begin

    {a,b}=2'b00; #10;
    {a,b}=2'b01; #10;
    {a,b}=2'b10; #10;
    {a,b}=2'b11; #10;
   $finish;
  end
endmodule
```

Marwadi University	**Marwadi University** **Faculty of Engineering and Technology** **Department of Information and Communication Technology**	
Subject: Digital Design using Verilog (01CT1619)	**Aim:** Write the Verilog code for designing 1 bit half adder and full adder circuit.	
Experiment No: 03	**Date:**	**Enrollment No: 92301733025**

Full Adder:

testbench.sv

```
// Code your testbench here
// or browse Examples
module full_adder_tb();
  reg a, b, cin;
  wire sum, cout;
  full_adder uut(a,b,cin, sum, cout);

  initial begin
    $dumpfile("full_adder.vcd");
    $dumpvars(0,full_adder_tb);
  end

  initial begin
    {a,b,cin}=2'b00; #10;
    {a,b,cin}=2'b01; #10;
    {a,b,cin}=2'b10; #10;
    {a,b,cin}=2'b11; #10;
    $finish;
  end
endmodule
```

Results:

Half Adder:

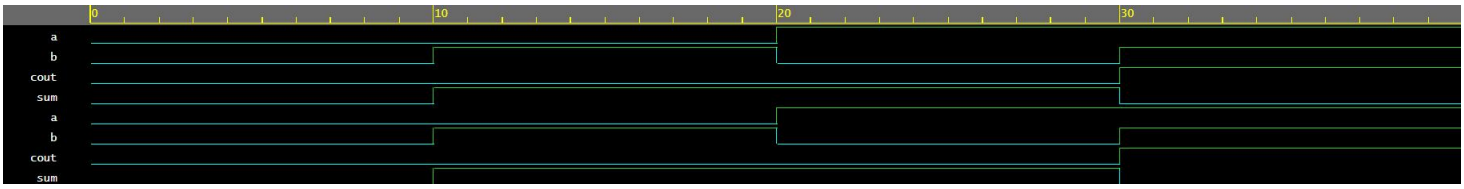

Full Adder:

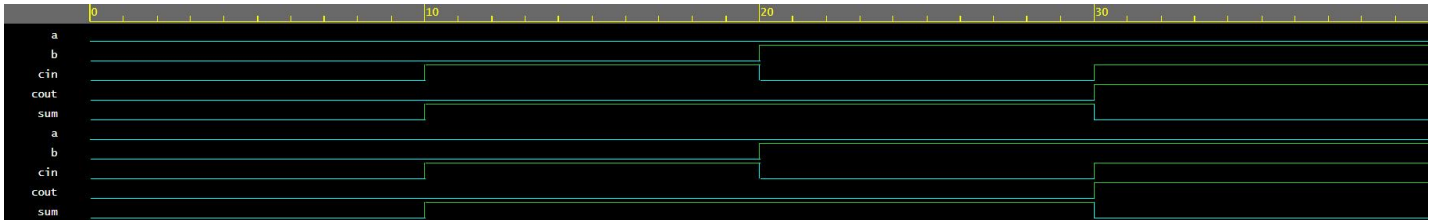

Observation and Result Analysis:

In this experiment, 1-bit Half Adder and Full Adder circuits were successfully designed and implemented using Verilog. The Half Adder was used to add two binary inputs and produced Sum and Carry outputs, while the Full

Adder was able to add three inputs (including carry input) and generate correct Sum and Carry outputs. Simulation results verified that the outputs matched the expected truth tables for all input combinations. This experiment demonstrated the basic concept of binary addition and the importance of adders as fundamental building blocks in digital systems and processors.

Post Lab Exercise:

a. Design One full adder using two half adder and one or gate.

Verilog Code:

```
// Code your design here
module half_adder(
  input A, B,
  output Sum, Carry
);

assign Sum = A ^ B;
assign Carry = A & B;

endmodule

module full_adder(
  input A, B, Cin,
  output Sum, Cout
);

wire s1, c1, c2;

half_adder HA1(A, B, s1, c1);
half_adder HA2(s1, Cin, Sum, c2);

assign Cout = c1 | c2;

endmodule
```

Marwadi University	**Marwadi University** **Faculty of Engineering and Technology** **Department of Information and Communication Technology**	
Subject: Digital Design using Verilog (01CT1619)	**Aim:** Write the Verilog code for designing 1 bit half adder and full adder circuit.	
Experiment No: 03	**Date:**	**Enrollment No: 92301733025**

Testbench:

```
// Code your testbench here
// or browse Examples
module tb_full_adder;

reg A, B, Cin;
wire Sum, Cout;

// instantiate full adder
full_adder uut (
    .A(A),
    .B(B),
    .Cin(Cin),
    .Sum(Sum),
    .Cout(Cout)
);

initial begin

    $dumpfile("full_adder.vcd");
    $dumpvars(0, tb_full_adder);

    // A B Cin
    A=0; B=0; Cin=0; #10;
    A=0; B=0; Cin=1; #10;
    A=0; B=1; Cin=0; #10;
    A=0; B=1; Cin=1; #10;
    A=1; B=0; Cin=0; #10;
    A=1; B=0; Cin=1; #10;
    A=1; B=1; Cin=0; #10;
    A=1; B=1; Cin=1; #10;

    $finish;

end

endmodule
```

Results:

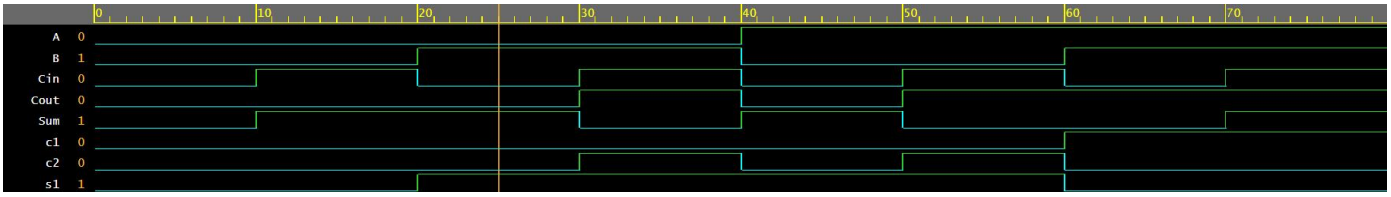

b. Design full substrator circuit using data flow modeling style

Verilog Code:

```
// Code your design here
module full_subtractor(
    input A, B, Bin,
    output D, Bout
);

assign D = A ^ B ^ Bin;

assign Bout = (~A & B) | (Bin & ~(A ^ B));

endmodule
```

Testbench:

```
module tb_full_subtractor;

reg A, B, Bin;
wire D, Bout;

// instantiate full subtractor
full_subtractor uut(
    .A(A),
    .B(B),
    .Bin(Bin),
    .D(D),
    .Bout(Bout)
);

initial begin

    $dumpfile("full_subtractor.vcd");
    $dumpvars(0, tb_full_subtractor);

    // A B Bin
    A=0; B=0; Bin=0; #10;
    A=0; B=0; Bin=1; #10;
    A=0; B=1; Bin=0; #10;
    A=0; B=1; Bin=1; #10;
    A=1; B=0; Bin=0; #10;
    A=1; B=0; Bin=1; #10;
    A=1; B=1; Bin=0; #10;
    A=1; B=1; Bin=1; #10;

    $finish;
end
endmodule
```

Marwadi University	**Marwadi University** **Faculty of Engineering and Technology** **Department of Information and Communication Technology**	
Subject: Digital Design using Verilog (01CT1619)	**Aim:** Write the Verilog code for designing 1 bit half adder and full adder circuit.	
Experiment No: 03	**Date:**	**Enrollment No: 92301733025**
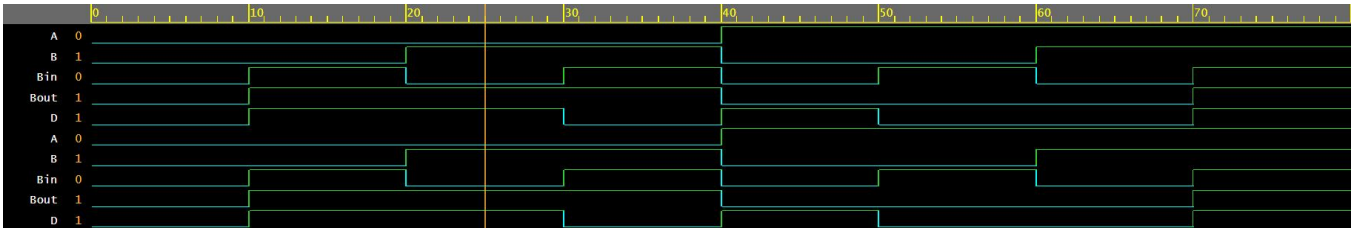
Results: