Aim: Write the Verilog code for designing 16x1 Multiplexer with 2x1 multiplexer and verify.

IDE: EDA Playground

Theory:

Multiplexer is a combinational circuit that has maximum of 2n data inputs, 'n' selection lines and single output. One of these data inputs will be connected to the output based on the values of selection lines. Since there are 'n' selection lines, there will be 2n possible combinations of zeros and ones. So, each combination will select only one data input.

Multiplexers are used in various applications where multiple-data is needed to be transmitted by using single line, for example in communication system, computer memory, transmission between satellites etc.

Multiplexers are capable of handling both analog and digital applications. In analog applications, multiplexers are made up of relays and transistor switches, whereas in digital applications, the multiplexers are built from standard logic gates. Following figure shows the general idea of a multiplexer with n input signal, m control signals and one output signal.

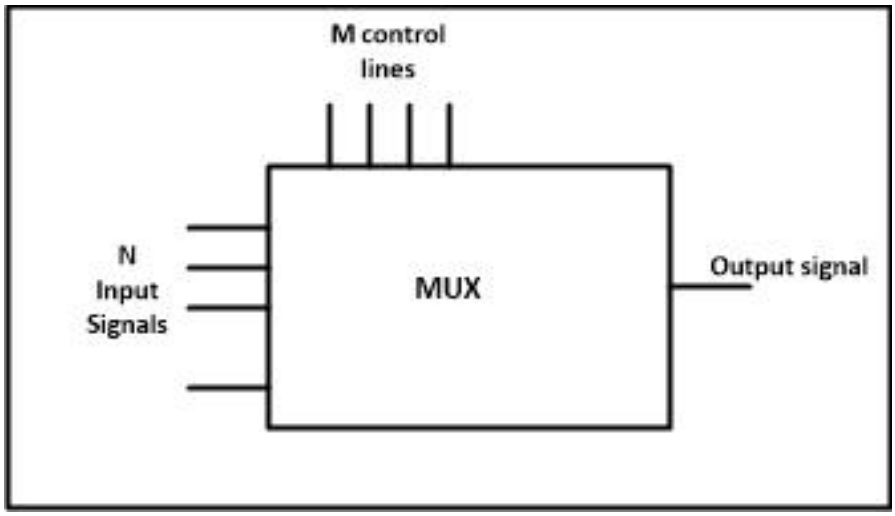

Types of Multiplexers: -

Multiplexer are commonly classified into the following four types: -

1) 2x1 multiplexer 2) 4x1 multiplexer 3)8x1 multiplexer 4) 16x1 multiplexer

1) 2 x 1 Multiplexer: -

In this Mux there are 2 input lines and 1 selection line. Fig. 2 shows the block diagram & logic

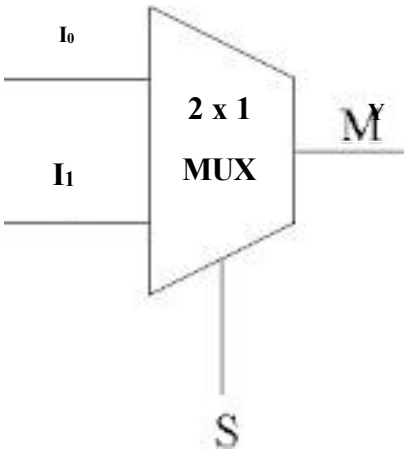

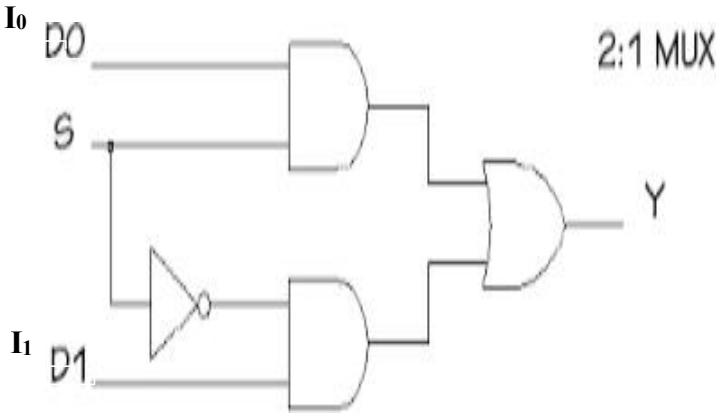

diagram of 2 x 1 mux. The IC no. of 2 x 1 mux is 74158.

Truth table for 2x1 Mux

INPUTS	OUTPUT Y
0	I_0
1	I_1

Logic function: -

$$Y = I_0 S' + I_1 S$$

2) 16x 1 Multiplexer: -

In this Mux there are 16 input lines and 4 selection lines. Fig. 5shows the block diagram & circuit diagram of 16 x 1 mux. The IC no. of 16 x 1 mux is 74150.

Marwadi University	**Marwadi University** **Faculty of Technology** **Department of Information and Communication Technology**	
Subject: Digital Design using Verilog (01CT1619)	**Aim:** Write the Verilog code for designing 16x1 Multiplexer with 2x1 multiplexer and verify.	
Experiment No: 04	**Date:**	**Enrollment No:**

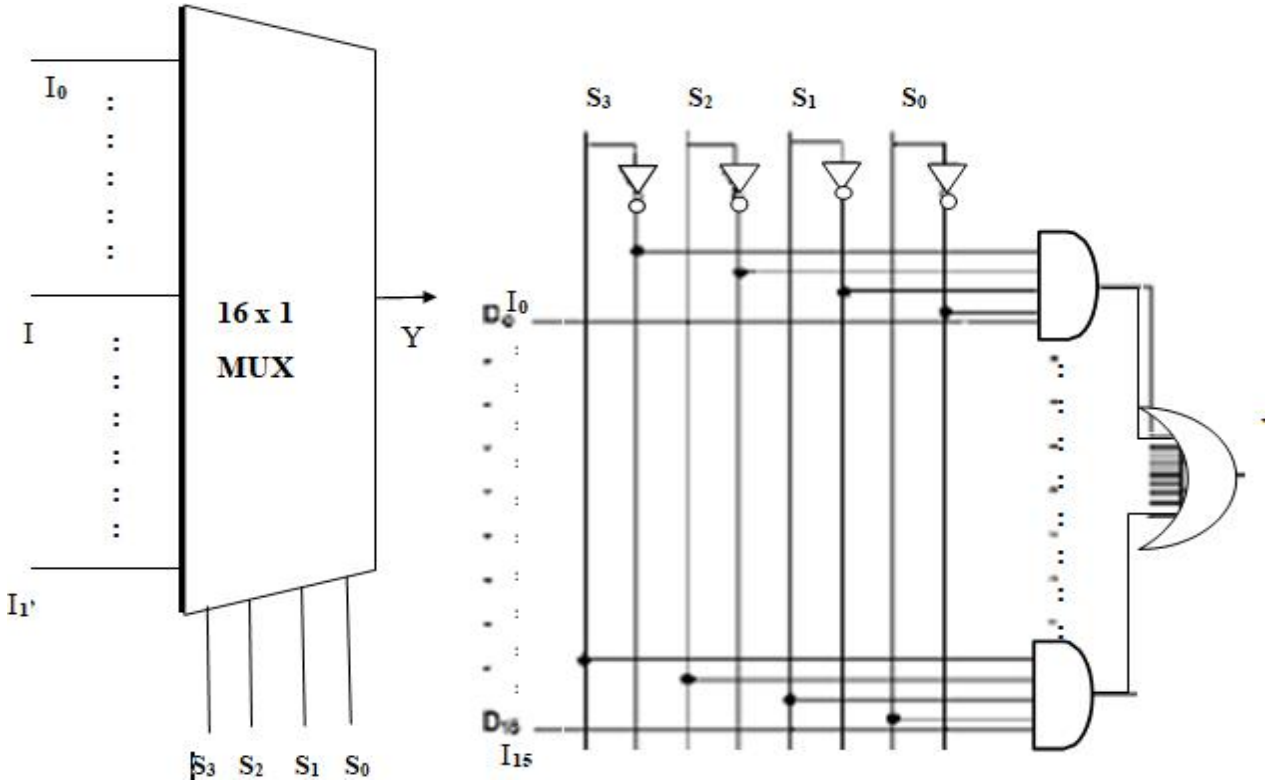

Truth table for 16 x 1 mux

Input S_3	Input S_3	Input S_3	Input S_3	Output Y
0	0	0	0	I_0
0	0	0	1	I_1
0	0	1	0	I_2
0	0	1	1	I_3
0	1	0	0	I_4

0	1	0	1	I_5
0	1	1	0	I_6
0	1	1	1	I_7
1	0	0	0	I_8
1	0	0	1	I_9
1	0	1	0	I_{10}
1	0	1	1	I_{11}
1	1	0	0	I_{12}
1	1	0	1	I_{13}
1	1	1	0	I_{14}
1	1	1	1	I_{15}

Logic function: -

$Y = I_0S_0'S_1'S_2'S_3' + I_1S_0S_1'S_2'S_3' + I_2S_0'S_1S_2'S_3' + I_3S_0S_1S_2'S_3' + I_4S_0'S_1'S_2S_3' + I_5S_0S_1'S_2S_3' + I_6S_0'S_1S_2S_3' + I_7S_0S_1S_2S_3' + I_8S_0'S_1'S_2'S_3 + I_9S_0S_1'S_2'S_3 + I_{10}S_0'S_1S_2'S_3 + I_{11}S_0S_1S_2'S_3 + I_{12}S_0'S_1'S_2S_3 + I_{13}S_0S_1'S_2S_3 + I_{14}S_0S_1S_2S_3 + I_{15}S_0S_1S_2S_3$

Marwadi University	**Marwadi University** **Faculty of Technology** **Department of Information and Communication Technology**	
Subject: Digital Design using Verilog (01CT1619)	**Aim:** Write the Verilog code for designing 16x1 Multiplexer with 2x1 multiplexer and verify.	
Experiment No: 04	**Date:**	**Enrollment No:**

Pre Lab Exercise:

a. What is major practical requirement of multiplexer?

The major practical requirement of a multiplexer (MUX) is to select one signal from multiple input signals and transmit it to a single output line. It is widely used in digital systems to reduce the number of communication lines, select data sources, perform data routing, and implement Boolean functions. Multiplexers help in efficient utilization of hardware and are commonly used in processors, communication systems, and data selection circuits.

b. Identify and Draw correct realization of Z= AB+BC+DA using 8:1 multiplxer?

A	B	C	Z = AB + BC + CA
0	0	0	0
0	0	1	0
0	1	0	0
0	1	1	1
1	0	0	0
1	0	1	1
1	1	0	1
1	1	1	1

A	B	C	Z = AB + BC + CA
0	0	0	0
0	0	1	0
0	1	0	0
0	1	1	1

A	B	C	Z = AB + BC + CA
1	0	0	0
1	0	1	1
1	1	0	1
1	1	1	1

c. Write formula to identify number of select line in 8x1 mux? General formula:

$$= \log_2$$

Where:

- n= number of select lines
- N= number of inputs For 8×1 MUX:

$$= \log_2 8 = 3$$

So, 3 select lines are required for an 8×1 multiplexer.

<u>Verilog Code:</u>

Marwadi University	**Marwadi University** **Faculty of Technology** **Department of Information and Communication Technology**	
Subject: Digital Design using Verilog (01CT1619)	**Aim:** Write the Verilog code for designing 16x1 Multiplexer with 2x1 multiplexer and verify.	
Experiment No: 04	**Date:**	**Enrollment No:**

```verilog
module mux2x1(
    input I0, I1,
    input S,
    output Y
);

assign Y = S ? I1 : I0;

endmodule

module mux16x1(
    input [15:0] I,
    input [3:0] S,
    output Y
);

wire [7:0] w1;
wire [3:0] w2;
wire [1:0] w3;

// Stage 1
mux2x1 m0(I[0], I[1], S[0], w1[0]);
mux2x1 m1(I[2], I[3], S[0], w1[1]);
mux2x1 m2(I[4], I[5], S[0], w1[2]);
mux2x1 m3(I[6], I[7], S[0], w1[3]);
mux2x1 m4(I[8], I[9], S[0], w1[4]);
mux2x1 m5(I[10], I[11], S[0], w1[5]);
mux2x1 m6(I[12], I[13], S[0], w1[6]);
mux2x1 m7(I[14], I[15], S[0], w1[7]);

// Stage 2
mux2x1 m8(w1[0], w1[1], S[1], w2[0]);
mux2x1 m9(w1[2], w1[3], S[1], w2[1]);
mux2x1 m10(w1[4], w1[5], S[1], w2[2]);
mux2x1 m11(w1[6], w1[7], S[1], w2[3]);

// Stage 3
mux2x1 m12(w2[0], w2[1], S[2], w3[0]);
mux2x1 m13(w2[2], w2[3], S[2], w3[1]);
```

Test-bench:

```verilog
module tb_mux16x1;

reg [15:0] I;
reg [3:0] S;
wire Y;

mux16x1 uut(
    .I(I),
    .S(S),
    .Y(Y)
);

initial begin

    $dumpfile("mux16.vcd");
    $dumpvars(0, tb_mux16x1);

    I = 16'b1010_1100_1111_0001;

    S=4'b0000; #10;
    S=4'b0001; #10;
    S=4'b0010; #10;
    S=4'b0011; #10;
    S=4'b0100; #10;
    S=4'b0101; #10;
    S=4'b0110; #10;
    S=4'b0111; #10;
    S=4'b1000; #10;
    S=4'b1001; #10;
    S=4'b1010; #10;
    S=4'b1011; #10;
    S=4'b1100; #10;
    S=4'b1101; #10;
    S=4'b1110; #10;
    S=4'b1111; #10;

    $finish;

end
```

Marwadi University	**Marwadi University** **Faculty of Technology** **Department of Information and Communication Technology**	
Subject: Digital Design using Verilog (01CT1619)	**Aim:** Write the Verilog code for designing 16x1 Multiplexer with 2x1 multiplexer and verify.	
Experiment No: 04	**Date:**	**Enrollment No:**

Results:

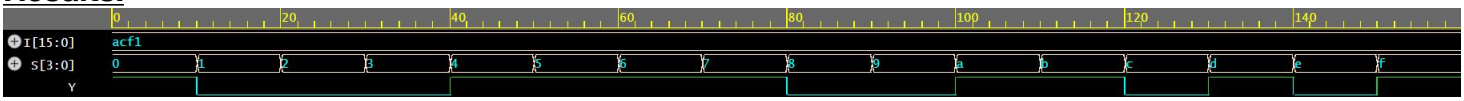

Observation and Result Analysis:

In this experiment, a 16×1 multiplexer was successfully designed using multiple 2×1 multiplexers in Verilog. The hierarchical arrangement of 2×1 MUX modules demonstrated how complex combinational circuits can be built using simpler building blocks. The simulation results verified that the output correctly selected one of the sixteen inputs based on the select lines. This experiment illustrates the importance of multiplexers in data selection and digital system design.

Post Lab Exercise:

a. Implementation of 16x1 mux using 8x1 mux and 2x1 mux, Mention block diagram with screenshot of verilog code ,test- bench and output.

Block Diagram:

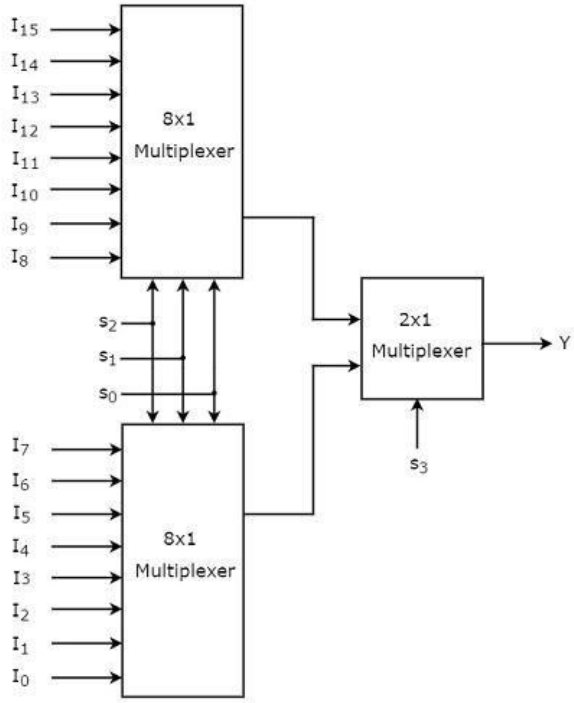

Marwadi University	**Marwadi University** **Faculty of Technology** **Department of Information and Communication Technology**	
Subject: Digital Design using Verilog (01CT1619)	**Aim:** Write the Verilog code for designing 16x1 Multiplexer with 2x1 multiplexer and verify.	
Experiment No: 04	**Date:**	**Enrollment No:**

Verilog Code:

```
module mux2x1(
input a,b,
input s,
output y
);

assign y = s ? b : a;

endmodule

module mux8x1(
input [7:0] i,
input [2:0] s,
output y
);

assign y =
(s==3'b000)? i[0]:
(s==3'b001)? i[1]:
(s==3'b010)? i[2]:
(s==3'b011)? i[3]:
(s==3'b100)? i[4]:
(s==3'b101)? i[5]:
(s==3'b110)? i[6]:
i[7];

endmodule

module mux16x1(
input [15:0] I,
input [3:0] S,
output Y
);

wire y0,y1;

mux8x1 m1(I[7:0], S[2:0], y0);
```

Testbench:

```
module tb_mux16;

reg [15:0] I;
reg [3:0] S;
wire Y;

mux16x1 uut(I,S,Y);

initial
begin

$dumpfile("mux16.vcd");
$dumpvars(0,tb_mux16);

I = 16'b1010110011110001;

S=0; #10;
S=1; #10;
S=2; #10;
S=3; #10;
S=4; #10;
S=5; #10;
S=6; #10;
S=7; #10;
S=8; #10;
S=9; #10;
S=10; #10;
S=11; #10;
S=12; #10;
S=13; #10;
S=14; #10;
S=15; #10;

$finish;

end
```

Marwadi University	**Marwadi University** **Faculty of Technology** **Department of Information and Communication Technology**	
Subject: Digital Design using Verilog (01CT1619)	**Aim:** Write the Verilog code for designing 16x1 Multiplexer with 2x1 multiplexer and verify.	
Experiment No: 04	**Date:**	**Enrollment No:**

Results:

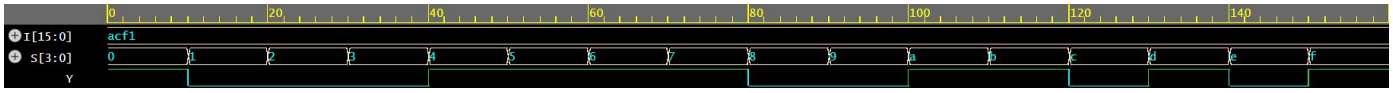

b. The Boolean function f implemented in the figure using two input multiplexers is

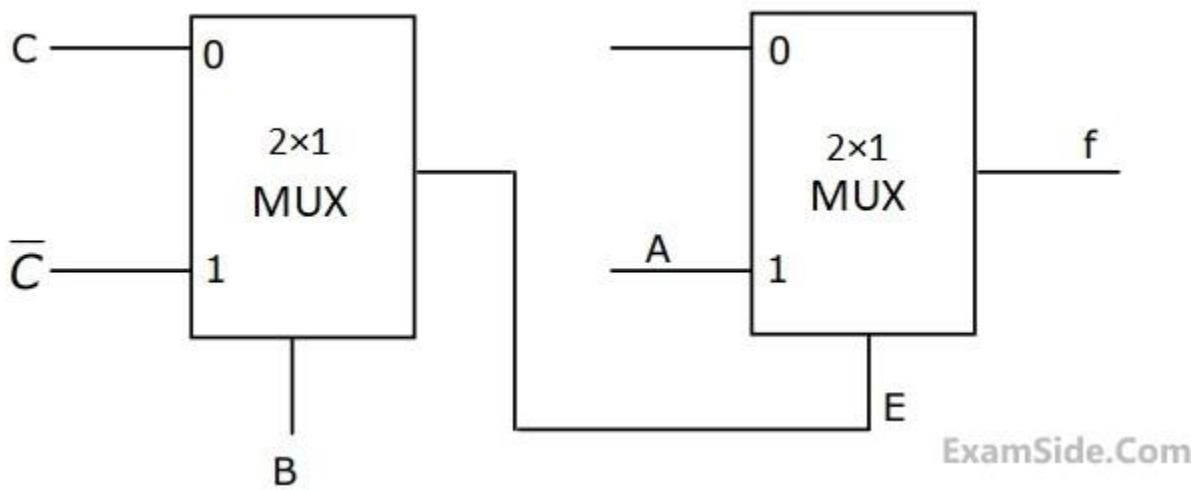

Mention procedure for obtaining Boolean function along with verilog code, testbench and output.

Step 1: Understand MUX rule

For a 2×1 MUX:

$$Y = S' I_0 + S I_1$$

Where

- **S** = select line
- **I_0** = input when S = 0
- **I_1** = input when S = 1

Step 2: First MUX output

From diagram:

Inputs:

- I_0 = C
- I_1 = C

- Select = B
  So output of first MUX: E = B'C + BC
  This is XOR operation:

$$E = B \oplus C$$

Step 3: Second MUX output

Inputs:

- I_0 = E
- I_1 = A
- Select = E So,

$$f = E' I_0 + E I_1$$

Substitute:

$$f = E' E + EA$$
$$= 0 +$$
$$=$$

Substitute E:

$$f = A(B \oplus C)$$

Final Boolean Function

$$f = A(B \oplus C)$$

Verilog Code:

Marwadi University	**Marwadi University** **Faculty of Technology** **Department of Information and Communication Technology**	
Subject: Digital Design using Verilog (01CT1619)	**Aim:** Write the Verilog code for designing 16x1 Multiplexer with 2x1 multiplexer and verify.	
Experiment No: 04	**Date:**	**Enrollment No:**

design.sv

```
// Code your design here
module mux_function(
input A,B,C,
output f
);

wire E;

assign E = B ^ C;

assign f = A & E;

endmodule
```

Testbench:

testbench.sv

```
// Code your testbench here
// or browse Examples
module tb_mux_function;

reg A,B,C;
wire f;

mux_function uut(A,B,C,f);

initial
begin

$dumpfile("mux_func.vcd");
$dumpvars(0,tb_mux_function);

A=0;B=0;C=0; #10;
A=0;B=0;C=1; #10;
A=0;B=1;C=0; #10;
A=0;B=1;C=1; #10;
A=1;B=0;C=0; #10;
A=1;B=0;C=1; #10;
A=1;B=1;C=0; #10;
A=1;B=1;C=1; #10;

$finish;

end

endmodule
```

Marwadi University	**Marwadi University** **Faculty of Technology** **Department of Information and Communication Technology**	
Subject: Digital Design using Verilog (01CT1619)	**Aim:** Write the Verilog code for designing 16x1 Multiplexer with 2x1 multiplexer and verify.	
Experiment No: 04	**Date:**	**Enrollment No:**
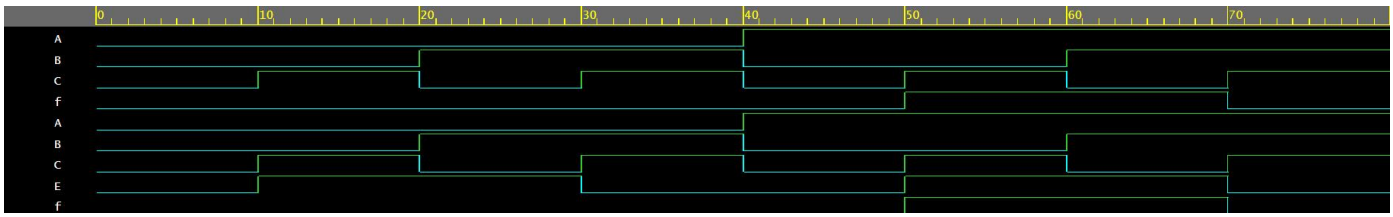
Results: