Marwadi University	**Marwadi University** **Faculty of Engineering and Technology** **Department of Information and Communication Technology**	
Subject: Digital Design using Verilog (01CT1619)	**Aim: Write the Verilog code for designing 4x16 decoder with 2x4 decoder**	
Experiment No: 06	**Date:**	**Enrollment No: 92301733025**

Aim: Write the Verilog code for designing 4x16 decoder with 2x4 decoder

IDE: EDA Playground

Theory:

A **decoder** is one of many types of combinational circuits. I't has multiple input lines and multiple output lines but has no selector lines like MUX and DEMUX. The decoder aids in the translation/decoding of information encoded by the encoder. As a result, it reverses the encoder's work. The decoder converts n bits of data input into two power n coded outputs.
Decoders are used in microprocessors, memory chips, and other data transfer circuits to select different I/O devices and other data transfer circuits. In a computer, a decoder is used to decode memory addresses.

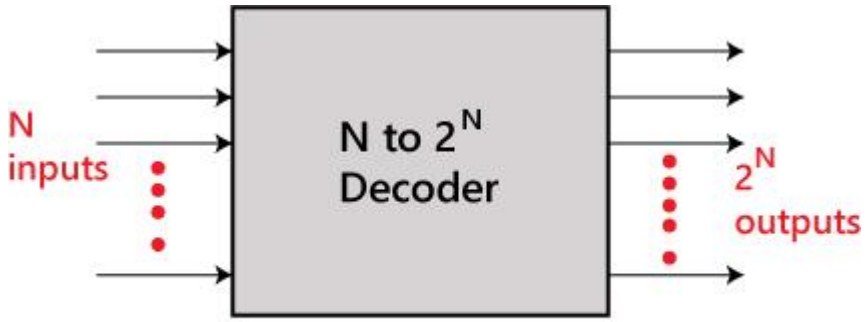

fig. N to 2^N Decoder

Implementing 4 * *16 Decoder using 2 * 4 Decoder*

2*4 Decoder has two input lines and four output lines, and it chooses one of the lines based on various input combinations.
4*16 Decoder has four inputs and sixteen outputs, and it chooses one line based on various input combinations. Four 2*4 encoders are required to produce 16 outputs and 1 extra 2*4 decoder is required to enable the decoder when creating 4*16 decoders. As a result, a total of 5 decoders are required. But output at a time will be generated by 1 decoder only at a time.

Marwadi University	Marwadi University Faculty of Engineering and Technology Department of Information and Communication Technology	
Subject: Digital Design using Verilog (01CT1619)	Aim: Write the Verilog code for designing 4x16 decoder with 2x4 decoder	
Experiment No: 06	Date:	Enrollment No: 92301733025

Circuit Diagram

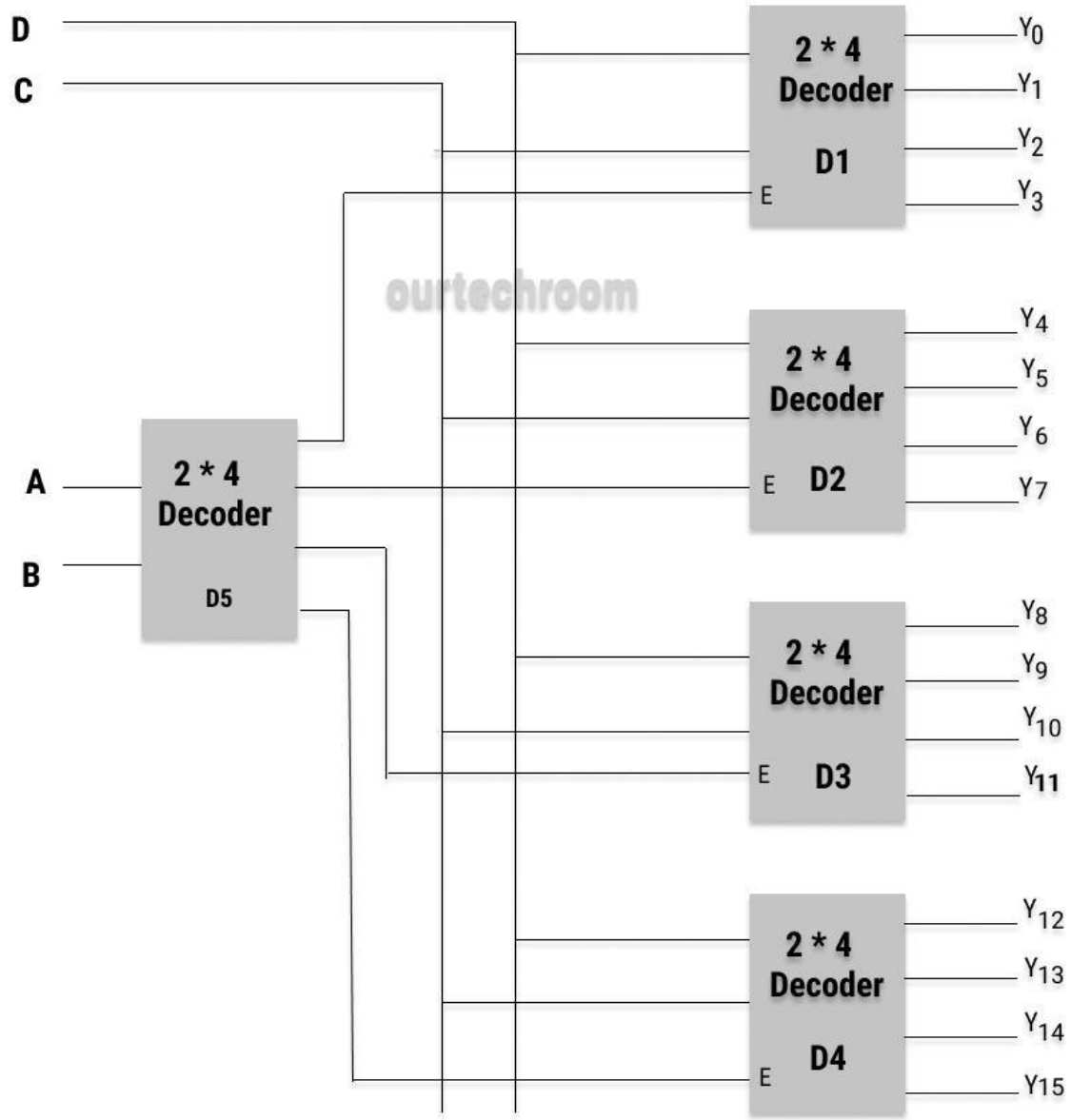

fig. Implementing 4*16 Decoder using 2*4 Decoder

Here, A-lines indicate MSB, and D-lines indicate LSB.

- When A = 0 , B = 0 , CD(any 00 or 01 or 10 or 11) , D1 Decoder is selected.
- When A = 0 , B = 1 , CD(any 00 or 01 or 10 or 11) , D2 Decoder is selected.
- When A = 1 , B = 0 , CD(any 00 or 01 or 10 or 11) , D3 Decoder is selected.
- When A = 1 , B = 1 , CD(any 00 or 01 or 10 or 11) , D4 Decoder is selected.

This concludes that selecting Decoder (D1, D2, D3, D4) only depends on the D5 decoder.
Now the output Y0 to Y15 are generated with the various input value.

ABCD Input Lines	Decoder Enabled	Output Lines
0000	D1 Decoder	Y0
0001	D1 Decoder	Y1
0010	D1 Decoder	Y2
0011	D1 Decoder	Y3
0100	D2 Decoder	Y4
0101	D2 Decoder	Y5
0110	D2 Decoder	Y6
0111	D2 Decoder	Y7
1000	D3 Decoder	Y8
1001	D3 Decoder	Y9
1010	D3 Decoder	Y10
1011	D3 Decoder	Y11
1100	D4 Decoder	Y12
1101	D4 Decoder	Y13
1110	D4 Decoder	Y14
1111	D4 Decoder	Y15

Marwadi University	**Marwadi University** **Faculty of Engineering and Technology** **Department of Information and Communication Technology**	
Subject: Digital Design using Verilog (01CT1619)	**Aim: Write the Verilog code for designing 4x16 decoder with 2x4 decoder**	
Experiment No: 06	**Date:**	**Enrollment No: 92301733025**

Pre Lab Exercise:

a. What is Decoder circuit?
A decoder is a combinational logic circuit that converts coded binary input into a set of output lines, where only one output is active at a time for each input combination. It performs the reverse operation of an encoder.
Decoders are commonly used in memory address decoding, instruction decoding in processors, and display systems.

b. Draw gate level circuit of 2x4 line decoder?

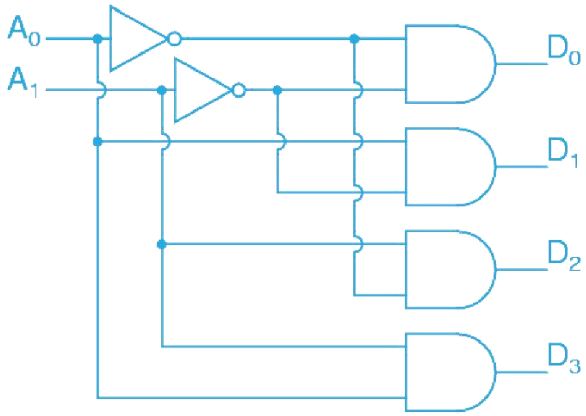

c. BCD to Seven segment conversion is which kind of process and why ?
BCD to Seven Segment conversion is a decoding process because it converts BCD (Binary Coded Decimal) input into seven output signals that control the segments of a display. Each BCD input combination activates specific segments (a–g) to represent decimal digits (0–9). Hence, it translates coded input into a readable visual output, which is the function of a decoder.

Verilog Code:

Marwadi University	**Marwadi University** **Faculty of Engineering and Technology** **Department of Information and Communication Technology**	
Subject: Digital Design using Verilog (01CT1619)	**Aim: Write the Verilog code for designing 4x16 decoder with 2x4 decoder**	
Experiment No: 06	**Date:**	**Enrollment No: 92301733025**

design.sv

```
// Code your design here
module decoder2x4(
input A, B,
input En,
output [3:0] Y
);

assign Y[0] = En & ~A & ~B;
assign Y[1] = En & ~A & B;
assign Y[2] = En & A & ~B;
assign Y[3] = En & A & B;

endmodule

module decoder4x16(
input [3:0] A,
output [15:0] Y
);

wire [3:0] w;

// first stage decoder
decoder2x4 d0(A[3], A[2], 1'b1, w);

// second stage decoders
decoder2x4 d1(A[1], A[0], w[0], Y[3:0]);
decoder2x4 d2(A[1], A[0], w[1], Y[7:4]);
decoder2x4 d3(A[1], A[0], w[2], Y[11:8]);
decoder2x4 d4(A[1], A[0], w[3], Y[15:12]);

endmodule
```

Test-bench:

Marwadi University	**Marwadi University** **Faculty of Engineering and Technology** **Department of Information and Communication Technology**	
Subject: Digital Design using Verilog (01CT1619)	**Aim: Write the Verilog code for designing 4x16 decoder with 2x4 decoder**	
Experiment No: 06	**Date:**	**Enrollment No: 92301733025**

testbench.sv

```
// Code your testbench here
// or browse Examples
module tb_decoder4x16;

reg [3:0] A;
wire [15:0] Y;

decoder4x16 uut(A,Y);

initial
begin

$dumpfile("decoder.vcd");
$dumpvars(0,tb_decoder4x16);

A=4'b0000; #10;
A=4'b0001; #10;
A=4'b0010; #10;
A=4'b0011; #10;
A=4'b0100; #10;
A=4'b0101; #10;
A=4'b0110; #10;
A=4'b0111; #10;
A=4'b1000; #10;
A=4'b1001; #10;
A=4'b1010; #10;
A=4'b1011; #10;
A=4'b1100; #10;
A=4'b1101; #10;
A=4'b1110; #10;
A=4'b1111; #10;

$finish;

end

endmodule
```

Results:

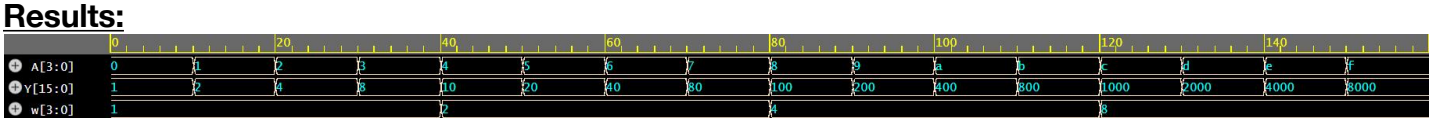

Marwadi University	**Marwadi University** **Faculty of Engineering and Technology** **Department of Information and Communication Technology**	
Subject: Digital Design using Verilog (01CT1619)	**Aim: Write the Verilog code for designing 4x16 decoder with 2x4 decoder**	
Experiment No: 06	**Date:**	**Enrollment No: 92301733025**

Observation and Result Analysis:

In this experiment, a 4×16 decoder was successfully designed using multiple 2×4 decoders in Verilog. The circuit was implemented using enable logic to activate only one output line for each input combination. Simulation results verified that for every 4-bit input, only one corresponding output becomes HIGH. This experiment demonstrates the use of hierarchical design to build complex decoders from smaller decoder blocks, which are widely used in memory addressing and digital systems.

Post Lab Exercise:

a. Write verilog code, test bench and output for 3:8 decoder.

Verilog Code:

design.sv

```
// Code your design here
module decoder3x8(
    input A, B, C,
    output [7:0] Y
);

assign Y[0] = ~A & ~B & ~C;
assign Y[1] = ~A & ~B & C;
assign Y[2] = ~A & B & ~C;
assign Y[3] = ~A & B & C;
assign Y[4] = A & ~B & ~C;
assign Y[5] = A & ~B & C;
assign Y[6] = A & B & ~C;
assign Y[7] = A & B & C;

endmodule
```

Testbench:

Marwadi University	**Marwadi University** **Faculty of Engineering and Technology** **Department of Information and Communication Technology**	
Subject: Digital Design using Verilog (01CT1619)	**Aim: Write the Verilog code for designing 4x16 decoder with 2x4 decoder**	
Experiment No: 06	**Date:**	**Enrollment No: 92301733025**

testbench.sv

```
// Code your testbench here
// or browse Examples
module tb_decoder3x8;

reg A, B, C;
wire [7:0] Y;

decoder3x8 uut(A,B,C,Y);

initial
begin

$dumpfile("decoder3x8.vcd");
$dumpvars(0,tb_decoder3x8);

A=0; B=0; C=0; #10;
A=0; B=0; C=1; #10;
A=0; B=1; C=0; #10;
A=0; B=1; C=1; #10;
A=1; B=0; C=0; #10;
A=1; B=0; C=1; #10;
A=1; B=1; C=0; #10;
A=1; B=1; C=1; #10;

$finish;

end

endmodule
```

Results:

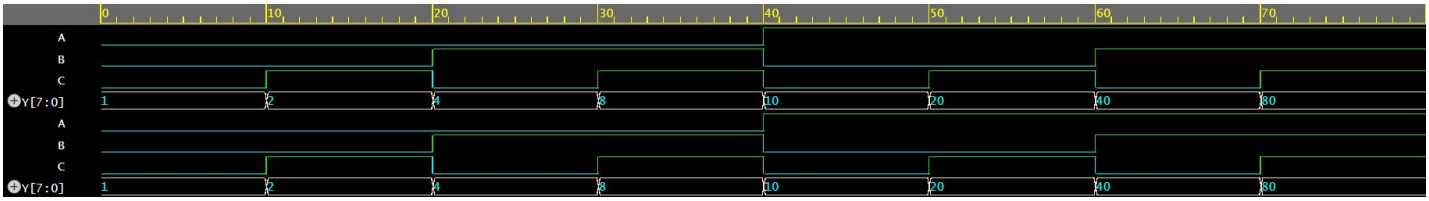

b. Write verilog code, test bench and output for 3:8 decoder with enabled output.

Verilog Code:

design.sv

```
// Code your design here
module decoder3x8_enable(
    input A, B, C,
    input E,
    output [7:0] Y
);

assign Y[0] = E & ~A & ~B & ~C;
assign Y[1] = E & ~A & ~B & C;
assign Y[2] = E & ~A & B & ~C;
assign Y[3] = E & ~A & B & C;
assign Y[4] = E & A & ~B & ~C;
assign Y[5] = E & A & ~B & C;
assign Y[6] = E & A & B & ~C;
assign Y[7] = E & A & B & C;

endmodule
```

Testbench:

testbench.sv

```
// or browse Examples
module tb_decoder3x8_enable;

reg A, B, C, E;
wire [7:0] Y;

decoder3x8_enable uut(A,B,C,E,Y);

initial
begin

$dumpfile("decoder3x8_enable.vcd");
$dumpvars(0,tb_decoder3x8_enable);

// Enable OFF
E=0; A=0; B=0; C=0; #10;
E=0; A=1; B=1; C=1; #10;

// Enable ON
E=1; A=0; B=0; C=0; #10;
E=1; A=0; B=0; C=1; #10;
E=1; A=0; B=1; C=0; #10;
E=1; A=0; B=1; C=1; #10;
E=1; A=1; B=0; C=0; #10;
E=1; A=1; B=0; C=1; #10;
E=1; A=1; B=1; C=0; #10;
E=1; A=1; B=1; C=1; #10;

$finish;

end

endmodule
```

Marwadi University	**Marwadi University** **Faculty of Engineering and Technology** **Department of Information and Communication Technology**	
Subject: Digital Design using Verilog (01CT1619)	**Aim: Write the Verilog code for designing 4x16 decoder with 2x4 decoder**	
Experiment No: 06	**Date:**	**Enrollment No: 92301733025**
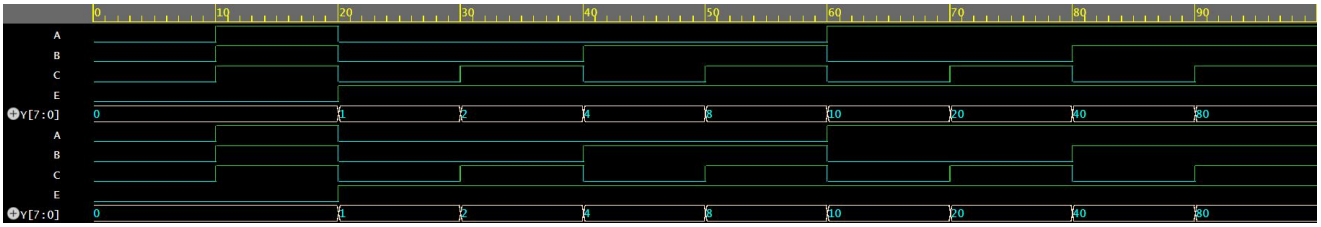
Results: