Marwadi University	**Marwadi University** **Faculty of Engineering and Technology** **Department of Information and Communication Technology**	
Subject: Digital Design using Verilog (01CT1619)	**Aim:** Write the Verilog code for designing 8 to 3 priority encoder	
Experiment No: 07	**Date:**	**Enrollment No: 92301733025**

Aim: Write the Verilog code for designing 8 to 3 priority encoder

IDE: EDA Playground

Theory:

An encoder is a kind of combinational circuit which converts multiple input signal to a coded output signal in such a way that the output signal reassembles complete information which is fed at the input of the encoder. The encoder consists of '2n' bits of input lines and 'n' bits output lines. The circuit of an encoder is based on the operation of Boolean expressions. 8 to 3-bit **priority encoder** is an encoder that consists of 8 input lines and 3 output lines. It can also be called an Octal to a binary encoder. Each input line has a base value of 8 (octal) and each output has a base value of 2 (binary). The truth table below gives us an idea of the operation of the 8 to 3-bit Priority Encoder.

Inputs								Outputs		
D7	D6	D5	D4	D3	D2	D1	D0	Q2	Q1	Q0
0	0	0	0	0	0	0	1	0	0	0
0	0	0	0	0	0	1	X	0	0	1
0	0	0	0	0	1	X	X	0	1	0
0	0	0	0	1	X	X	X	0	1	1
0	0	0	1	X	X	X	X	1	0	0
0	0	1	X	X	X	X	X	1	0	1
0	1	X	X	X	X	X	X	1	1	0
1	X	X	X	X	X	X	X	1	1	1

Logical Expression for Output lines

- Q0 = D1 + D3 + D5 + D7
- Q1 = D2 + D3 + D6 + D7
- Q2 = D4 + D5 + D6 + D7

Marwadi University	**Marwadi University** **Faculty of Engineering and Technology** **Department of Information and Communication Technology**	
Subject: Digital Design using Verilog (01CT1619)	**Aim:** Write the Verilog code for designing 8 to 3 priority encoder	
Experiment No: 07	**Date:**	**Enrollment No: 92301733025**

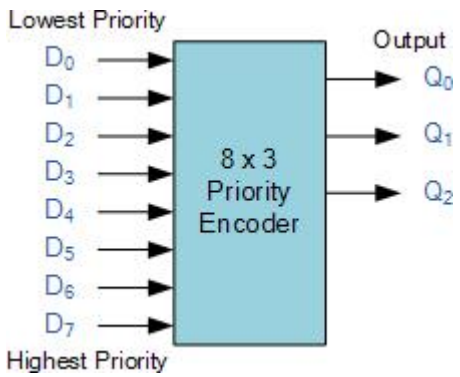

Basic Structural Design

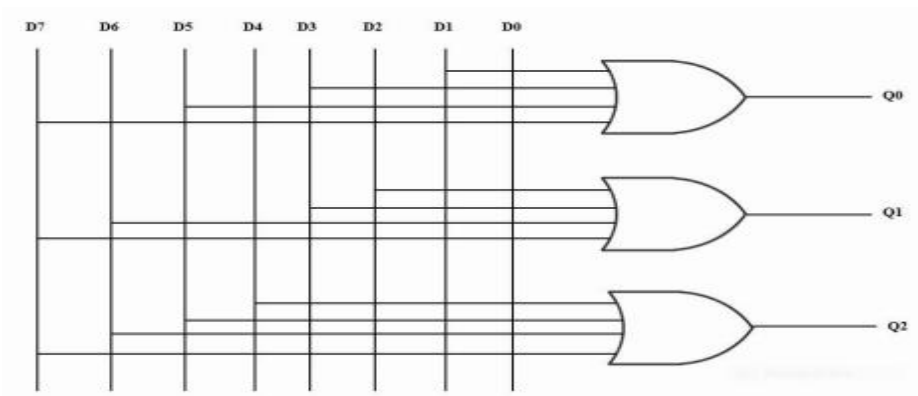

Circuit Diagram

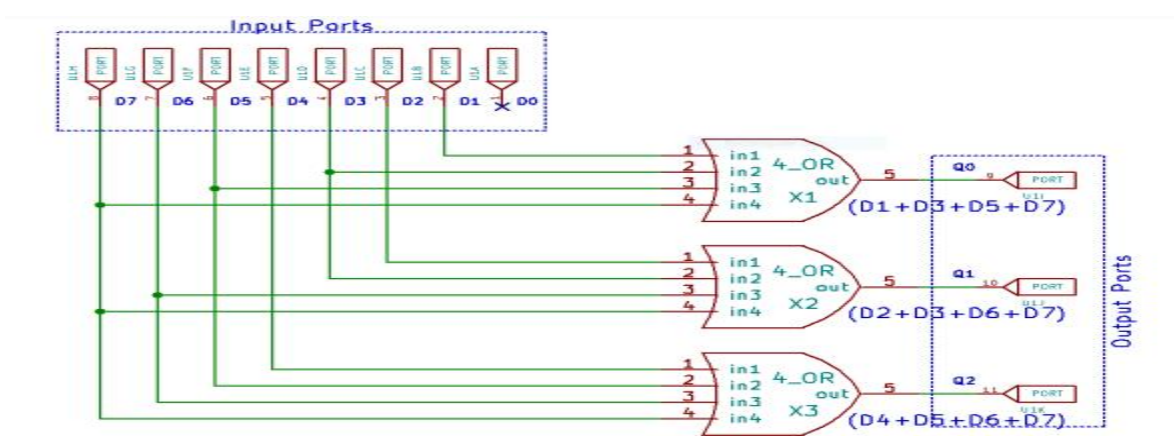

Marwadi University	**Marwadi University** **Faculty of Engineering and Technology** **Department of Information and Communication Technology**	
Subject: Digital Design using Verilog (01CT1619)	**Aim:** Write the Verilog code for designing 8 to 3 priority encoder	
Experiment No: 07	**Date:**	**Enrollment No: 92301733025**

Pre Lab Exercise:

a. Write difference between encoder and priority encoder?

An encoder is a combinational circuit that converts multiple input lines into a coded binary output. It assumes that only one input is active at a time. If more than one input is active simultaneously, the output becomes undefined.

A priority encoder is an advanced type of encoder that assigns priority to inputs. When multiple inputs are active at the same time, the output corresponds to the input with the highest priority. It also ignores lower-priority inputs when a higher-priority input is present.

Thus, the main difference is that a normal encoder cannot handle multiple active inputs properly, whereas a priority encoder can resolve conflicts by selecting the highest-priority input.

b. What is use of priority encoder?

A priority encoder is used to determine which input has the highest priority among multiple active inputs and convert that input into binary form. It is commonly used in interrupt handling systems in processors, keyboard encoding, data compression, and resource management where multiple signals may occur at the same time but only the most important one needs to be processed first.

c. What is four-line to two-line priority encoder with active HIGH inputs and outputs, with priority assigned to the higher-order data input line? Also, Mention reason for selection

1. $X = D_2 + D_3$ and $Y = D_1\bar{D}_2 + D_3$
2. $X = D_1 + D_3$ and $Y = D_1\bar{D}_2 + D_3$
3. $X = D_2 + \bar{D}_3$ and $Y = D_1\bar{D}_2 + D_3$
4. $X = \bar{D}_2 + D_3$ and $Y = \bar{D}_1\bar{D}_2 + D_3$

A 4-to-2 priority encoder converts 4 input lines (D0–D3) into 2 output lines (X,Y).
In a priority encoder, if more than one input is HIGH at the same time, the highest priority input is selected. Here, priority is assigned to higher-order input:

$$\check{\upsilon}_3 > \check{\upsilon}_2 > \check{\upsilon}_1 > \check{\upsilon}_0$$

Marwadi University	**Marwadi University** **Faculty of Engineering and Technology** **Department of Information and Communication Technology**	
Subject: Digital Design using Verilog (01CT1619)	**Aim:** Write the Verilog code for designing 8 to 3 priority encoder	
Experiment No: 07	**Date:**	**Enrollment No: 92301733025**

D3	D2	D1	D0	X	Y
0	0	0	1	0	0
0	0	1	x	0	1
0	1	x	x	1	0
1	x	x	x	1	1

Reason for selection

Since the encoder is priority-based, the output must always represent the highest-order input that is HIGH.

- Expression X = D2 + D3 ensures output bit X becomes 1 when higher priority inputs (D2 or D3) are active.
- Expression Y = D1D2 + D3 ensures D1 is considered only when D2 is 0 (higher priority inactive).
- D3 always dominates, giving output 11.

Thus, the selected Boolean expressions correctly implement priority logic.

Verilog Code:

design.sv

```
// Code your design here
module priority_encoder_8to3(
    input [7:0] D,
    output reg [2:0] Y,
    output reg V      // Valid output indicator
);

always @(*)
begin

V = 1'b1;

casex(D)

8'b1xxxxxxx: Y = 3'b111;   // D7 highest priority
8'b01xxxxxx: Y = 3'b110;
8'b001xxxxx: Y = 3'b101;
8'b0001xxxx: Y = 3'b100;
8'b00001xxx: Y = 3'b011;
8'b000001xx: Y = 3'b010;
8'b0000001x: Y = 3'b001;
8'b00000001: Y = 3'b000;

default:
begin
Y = 3'b000;
V = 1'b0;
end

endcase

end

endmodule
```

Marwadi University	**Marwadi University** **Faculty of Engineering and Technology** **Department of Information and Communication Technology**	
Subject: Digital Design using Verilog (01CT1619)	**Aim:** Write the Verilog code for designing 8 to 3 priority encoder	
Experiment No: 07	**Date:**	**Enrollment No: 92301733025**

Test-bench:

```
module tb_priority_encoder_8to3;

reg [7:0] D;
wire [2:0] Y;
wire V;

priority_encoder_8to3 uut(D,Y,V);

initial
begin

$dumpfile("priority_encoder.vcd");
$dumpvars(0,tb_priority_encoder_8to3);

// test cases

D = 8'b00000001; #10;
D = 8'b00000010; #10;
D = 8'b00000100; #10;
D = 8'b00001000; #10;
D = 8'b00010000; #10;
D = 8'b00100000; #10;
D = 8'b01000000; #10;
D = 8'b10000000; #10;

// multiple inputs high (priority check)
D = 8'b10101000; #10;
D = 8'b00110100; #10;

// no input high
D = 8'b00000000; #10;

$finish;

end

endmodule
```

Results:

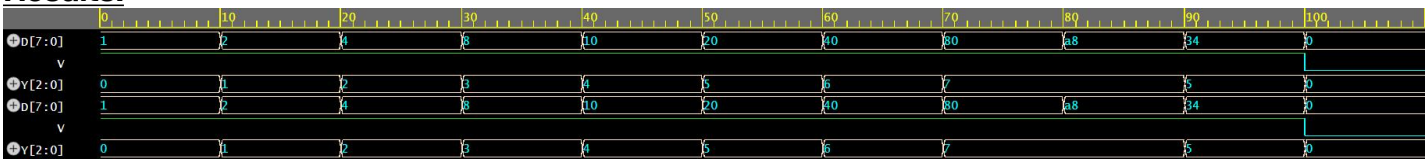

Observation and Result Analysis:

In this experiment, an 8:3 priority encoder was successfully designed using Verilog in behavioral modeling style. The circuit converts 8 input lines into a 3-bit binary output corresponding to the highest priority active input. Simulation results verified that when multiple inputs were HIGH, the encoder selected the highest-order input correctly. This experiment demonstrates how priority logic is used in digital systems to resolve multiple active inputs efficiently.

Marwadi University	**Marwadi University** **Faculty of Engineering and Technology** **Department of Information and Communication Technology**	
Subject: Digital Design using Verilog (01CT1619)	**Aim:** Write the Verilog code for designing 8 to 3 priority encoder	
Experiment No: 07	**Date:**	**Enrollment No: 92301733025**

Post Lab Exercise:

a. Write verilog code, test bench and output for 4 to 2 Priority Encoder.

Verilog Code:

```
// Code your design here
module priority_encoder_4to2(
input [3:0] D,
output reg [1:0] Y,
output reg V
);

always @(*)
begin

V = 1'b1;

casex(D)

4'b1xxx: Y = 2'b11;
4'b01xx: Y = 2'b10;
4'b001x: Y = 2'b01;
4'b0001: Y = 2'b00;

default:
begin
Y = 2'b00;
V = 1'b0;
end

endcase

end

endmodule
```

Testbench:

```
// Code your testbench here
// or browse Examples
module tb_priority4to2;

reg [3:0] D;
wire [1:0] Y;
wire V;

priority_encoder_4to2 uut(D,Y,V);

initial
begin

$dumpfile("priority4.vcd");
$dumpvars(0,tb_priority4to2);

D=4'b0001; #10;
D=4'b0010; #10;
D=4'b0100; #10;
D=4'b1000; #10;

// multiple inputs
D=4'b1010; #10;
D=4'b0111; #10;

// no input
D=4'b0000; #10;

$finish;

end

endmodule
```

Marwadi University	**Marwadi University** **Faculty of Engineering and Technology** **Department of Information and Communication Technology**	
Subject: Digital Design using Verilog (01CT1619)	**Aim:** Write the Verilog code for designing 8 to 3 priority encoder	
Experiment No: 07	**Date:**	**Enrollment No: 92301733025**

Results:

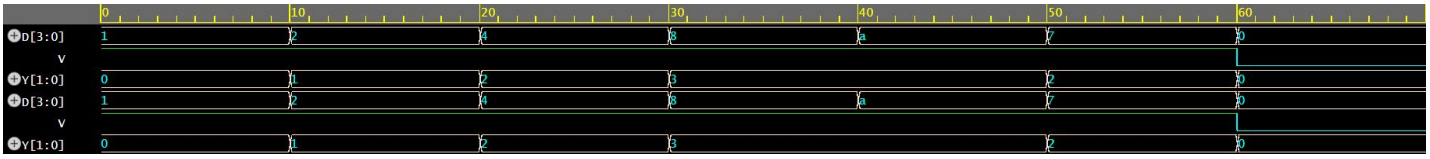

b. Write verilog code, test bench and output for Decimal to BCD Priority Encoder.

Verilog Code:

design.sv

```
// Code your design here
module decimal_to_bcd_priority(
input [9:0] D,
output reg [3:0] Y,
output reg V
);

always @(*)
begin

V = 1'b1;

casex(D)

10'b1xxxxxxxxx: Y = 4'b1001;
10'b01xxxxxxxx: Y = 4'b1000;
10'b001xxxxxxx: Y = 4'b0111;
10'b0001xxxxxx: Y = 4'b0110;
10'b00001xxxxx: Y = 4'b0101;
10'b000001xxxx: Y = 4'b0100;
10'b0000001xxx: Y = 4'b0011;
10'b00000001xx: Y = 4'b0010;
10'b000000001x: Y = 4'b0001;
10'b0000000001: Y = 4'b0000;

default:
begin
Y = 4'b0000;
V = 1'b0;
end

endcase

end

endmodule
```

Testbench:

Marwadi University	**Marwadi University** **Faculty of Engineering and Technology** **Department of Information and Communication Technology**	
Subject: Digital Design using Verilog (01CT1619)	**Aim:** Write the Verilog code for designing 8 to 3 priority encoder	
Experiment No: 07	**Date:**	**Enrollment No: 92301733025**

testbench.sv

```
// Code your testbench here
// or browse Examples
module tb_decimal_bcd;

reg [9:0] D;
wire [3:0] Y;
wire V;

decimal_to_bcd_priority uut(D,Y,V);

initial
begin

$dumpfile("decimal_bcd.vcd");
$dumpvars(0,tb_decimal_bcd);

D=10'b0000000001; #10;
D=10'b0000000010; #10;
D=10'b0000000100; #10;
D=10'b0000001000; #10;
D=10'b0000010000; #10;
D=10'b0000100000; #10;
D=10'b0001000000; #10;
D=10'b0010000000; #10;
D=10'b0100000000; #10;
D=10'b1000000000; #10;

// multiple inputs
D=10'b1010100000; #10;

$finish;

end

endmodule
```
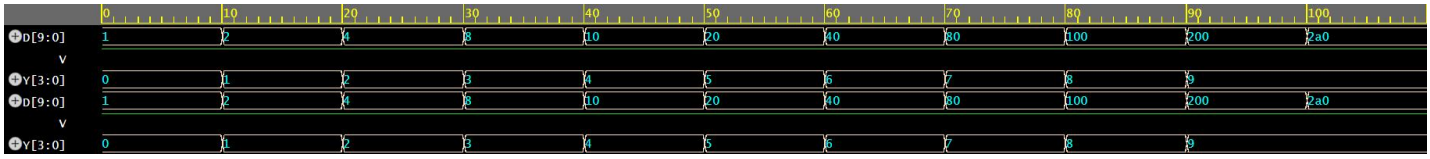
Results: