Marwadi University	**Marwadi University** **Faculty of Engineering and Technology** **Department of Information and Communication Technology**	
Subject: Digital Design using Verilog (01CT1619)	**Aim:** Write the Verilog code for designing binary to gray code converter circuit.	
Experiment No: 08	**Date:**	**Enrollment No: 92301733025**

Aim: Write the Verilog code for designing binary to gray code converter circuit.

IDE: EDA Playground

Theory:

Gray Code is similar to binary code except its successive number differs by only a single bit. Hence, it has importance in communication systems as it minimizes error occurrence. They are also useful in rotary, optical encoders, data acquisition systems, etc.

Let's see binary numbers and their equivalent gray code in the below table.

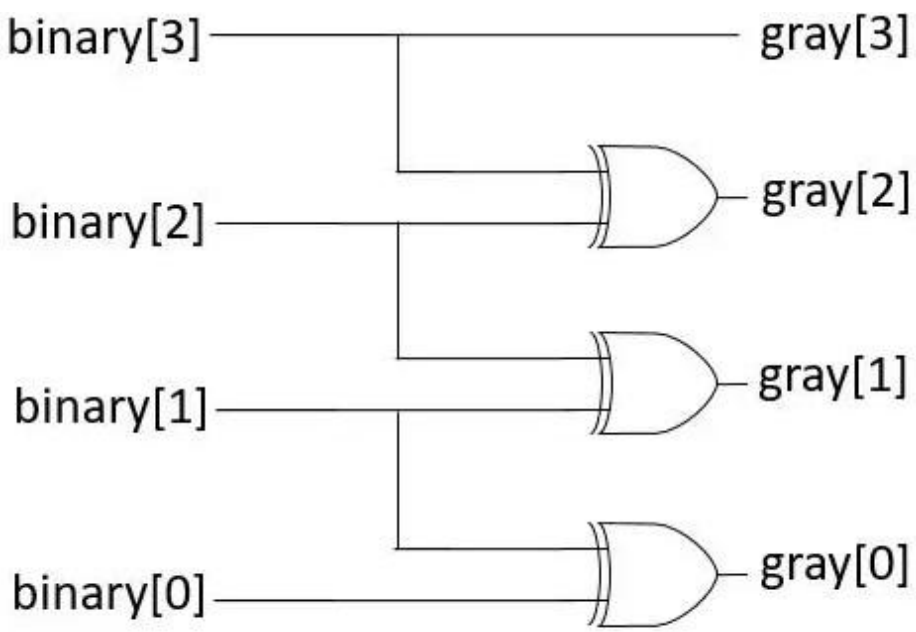

Marwadi University	**Marwadi University** **Faculty of Engineering and Technology** **Department of Information and Communication Technology**	
Subject: Digital Design using Verilog (01CT1619)	**Aim:** Write the Verilog code for designing binary to gray code converter circuit.	
Experiment No: 08	**Date:**	**Enrollment No: 92301733025**

Decimal Equivalent	Binary			Gray Code		
	B2	B1	B0	G2	G1	G0
0	0	0	0	**0**	**0**	**0**
1	0	0	1	**0**	**0**	**1**
2	0	1	0	**0**	**1**	**1**
3	0	1	1	**0**	**1**	**0**
4	1	0	0	**1**	**1**	**0**
5	1	0	1	**1**	**1**	**1**
6	1	1	0	**1**	**0**	**1**
7	1	1	1	**1**	**0**	**0**

Pre Lab Exercise:

a. What is binary to gray conversion?
Binary to Gray conversion is the process of converting a binary number into Gray code.
Gray code is a special binary number system in which only one bit changes at a time between consecutive numbers, reducing errors in digital systems such as encoders and communication circuits.

b. what would be gray code for decimal 50?

Step 1: Convert decimal 50 to binary $50_{10} = 110010_2$

Step 2: Convert binary to Gray

Binary	**1**	**1**	**0**	**0**	**1**	**0**
Gray	1	0	1	0	1	1

Gray code = **101011**

c. What is difference between binary to gray conversion and gray to binary conversion?

Binary → Gray Conversion

Converts binary number into Gray code

MSB remains same

Other bits obtained using XOR of adjacent binary bits

Used to reduce bit change errors

Example: 1101 → 1011

Gray → Binary Conversion

Converts Gray code into binary number

MSB remains same

Other bits obtained using XOR of previous binary result with current Gray bit

Used to retrieve original binary data

Example: 1011 → 1101

Verilog Code:

```
// Code your design here
// Binary to Gray Code Converter
module binary_to_gray (
    input  [3:0] binary,   // 4-bit binary input
    output [3:0] gray      // 4-bit gray output
);

// Gray code logic
assign gray[3] = binary[3];                // MSB same
assign gray[2] = binary[3] ^ binary[2];    // XOR operation
assign gray[1] = binary[2] ^ binary[1];
assign gray[0] = binary[1] ^ binary[0];

endmodule
```

Test-bench:

Marwadi University	**Marwadi University** **Faculty of Engineering and Technology** **Department of Information and Communication Technology**	
Subject: Digital Design using Verilog (01CT1619)	**Aim:** Write the Verilog code for designing binary to gray code converter circuit.	
Experiment No: 08	**Date:**	**Enrollment No: 92301733025**

```
module tb_binary_to_gray;

reg [3:0] binary;
wire [3:0] gray;

// Instantiate module
binary_to_gray uut (
    .binary(binary),
    .gray(gray)
);

initial begin

    $display("Binary  Gray");

    binary = 4'b0000; #10;
    $display("%b      %b", binary, gray);

    binary = 4'b0001; #10;
    $display("%b      %b", binary, gray);

    binary = 4'b0010; #10;
    $display("%b      %b", binary, gray);

    binary = 4'b0011; #10;
    $display("%b      %b", binary, gray);

    binary = 4'b0100; #10;
    $display("%b      %b", binary, gray);

    binary = 4'b1010; #10;
    $display("%b      %b", binary, gray);

    binary = 4'b1111; #10;
    $display("%b      %b", binary, gray);

```

Results:

```
Binary  Gray
0000    0000
0001    0001
0010    0011
0011    0010
0100    0110
1010    1111
1111    1000
```

Marwadi University	**Marwadi University** **Faculty of Engineering and Technology** **Department of Information and Communication Technology**	
Subject: Digital Design using Verilog (01CT1619)	**Aim:** Write the Verilog code for designing binary to gray code converter circuit.	
Experiment No: 08	**Date:**	**Enrollment No: 92301733025**

Observation and Result Analysis:

The Binary to Gray code converter was successfully designed and implemented using Verilog. The circuit converts binary input into Gray code output such that only one bit changes between consecutive values, which helps in reducing errors in digital communication and encoder systems. The simulation results from the testbench verified that the output Gray code matched the expected values for different binary inputs, confirming the correctness of the design.

Post Lab Exercise:

a. Write verilog code, test bench and output for gray to binary code.

Verilog Code:

```
// Gray to Binary Code Converter
module gray_to_binary (
    input  [3:0] gray,     // 4-bit gray input
    output [3:0] binary    // 4-bit binary output
);

// conversion logic
assign binary[3] = gray[3];                    // MSB same
assign binary[2] = binary[3] ^ gray[2];
assign binary[1] = binary[2] ^ gray[1];
assign binary[0] = binary[1] ^ gray[0];

endmodule
```

Testbench:

Marwadi University	**Marwadi University** **Faculty of Engineering and Technology** **Department of Information and Communication Technology**	
Subject: Digital Design using Verilog (01CT1619)	**Aim:** Write the Verilog code for designing binary to gray code converter circuit.	
Experiment No: 08	**Date:**	**Enrollment No: 92301733025**

```
module tb_gray_to_binary;

reg [3:0] gray;
wire [3:0] binary;

// instantiate module
gray_to_binary uut (
    .gray(gray),
    .binary(binary)
);

initial begin

$display("Gray    Binary");

gray = 4'b0000; #10;
$display("%b      %b", gray, binary);

gray = 4'b0001; #10;
$display("%b      %b", gray, binary);

gray = 4'b0011; #10;
$display("%b      %b", gray, binary);

gray = 4'b0010; #10;
$display("%b      %b", gray, binary);

gray = 4'b0110; #10;
$display("%b      %b", gray, binary);

gray = 4'b1111; #10;
$display("%b      %b", gray, binary);

gray = 4'b1010; #10;
$display("%b      %b", gray, binary);

$finish;
```

Results:

Gray	Binary
0000	0000
0001	0001
0011	0010
0010	0011
0110	0100
1111	1010
1010	1100

Marwadi University	**Marwadi University** **Faculty of Engineering and Technology** **Department of Information and Communication Technology**	
Subject: Digital Design using Verilog (01CT1619)	**Aim:** Write the Verilog code for designing binary to gray code converter circuit.	
Experiment No: 08	**Date:**	**Enrollment No: 92301733025**

b. Write verilog code, test bench and output for binary to excess-3 code.

Verilog Code:

```
// Binary to Excess-3 Code Converter
module binary_to_excess3 (
    input  [3:0] binary,      // 4-bit binary input
    output [3:0] excess3      // 4-bit excess-3 output
);

// add 3 to binary number
assign excess3 = binary + 4'b0011;

endmodule
```

Testbench:

```
module tb_binary_to_excess3;

reg [3:0] binary;
wire [3:0] excess3;

// instantiate module
binary_to_excess3 uut (
    .binary(binary),
    .excess3(excess3)
);

initial begin

$display("Binary    Excess-3");

// test values
binary = 4'b0000; #10;
$display("%b      %b", binary, excess3);

binary = 4'b0001; #10;
$display("%b      %b", binary, excess3);

binary = 4'b0010; #10;
$display("%b      %b", binary, excess3);

binary = 4'b0011; #10;
$display("%b      %b", binary, excess3);

binary = 4'b0100; #10;
$display("%b      %b", binary, excess3);

binary = 4'b0101; #10;
$display("%b      %b", binary, excess3);

binary = 4'b0110; #10;
$display("%b      %b", binary, excess3);
```

Marwadi University	**Marwadi University** **Faculty of Engineering and Technology** **Department of Information and Communication Technology**	
Subject: Digital Design using Verilog (01CT1619)	**Aim:** Write the Verilog code for designing binary to gray code converter circuit.	
Experiment No: 08	**Date:**	**Enrollment No: 92301733025**

Results:

Binary	Excess-3
0000	0011
0001	0100
0010	0101
0011	0110
0100	0111
0101	1000
0110	1001
0111	1010
1000	1011
1001	1100