Marwadi University	**Marwadi University** **Faculty of Engineering and Technology** **Department of Information and Communication Technology**	
Subject: Digital Design using Verilog (01CT1619)	**Aim:** Write the Verilog code for designing BCD to seven segment decoder circuit.	
Experiment No: 09	**Date:**	**Enrollment No: 92301733025**

Aim: Write the Verilog code for designing BCD to seven segment decoder circuit.

IDE: EDA Playground

Theory:

The Binary Coded Decimal (BCD) encoding method uses binary patterns to encode each decimal value (from 0 to 9), generally of 4-bits.

In contrast, a seven-segment display is an electrical device that displays Hexadecimal digits using seven Light Emitting Diodes (LEDs) arranged in a specific pattern (common cathode or common anode type) (in this case, decimal numbers, as input, are BCD, i.e., 0-9).

7-Segment LED displays are of two types:

1. **Common Cathode Type (CCT)** - This form of the display works by connecting all seven of the LEDs' cathodes to ground or -Vcc (thus, common cathode), which causes the LEDs to display numbers when a "HIGH" signal is applied to each anode.

2. **Common Anode Type (CAT)** - The seven LEDs in this display have all seven of their anodes linked to a battery or +Vcc, and when a 'LOW' signal is applied to each individual cathode, the LEDs display numbers.

The separate LED segments of a seven-segment display are not directly powered. However, for it to function, *we first convert our decimal number to its BCD equivalent signal, and then a BCD to seven-segment decoder converts that signal into the form supplied to the seven-segment display.*

The seven-segment decoder, which has four input lines and seven output lines (a, b, c, d, e, f, and g), receives this BCD (A, B, C, and D) input. The output is provided to a seven-segment LED display that shows the decimal number depending on the inputs.

Marwadi University	**Marwadi University** **Faculty of Engineering and Technology** **Department of Information and Communication Technology**	
Subject: Digital Design using Verilog (01CT1619)	**Aim:** Write the Verilog code for designing BCD to seven segment decoder circuit.	
Experiment No: 09	**Date:**	**Enrollment No: 92301733025**

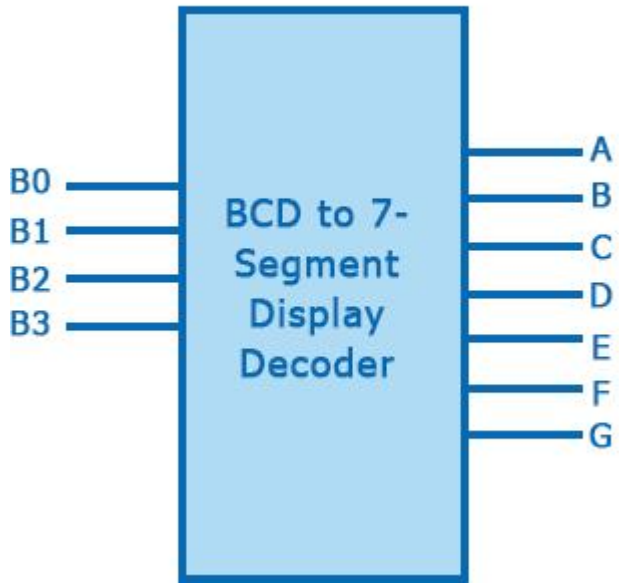

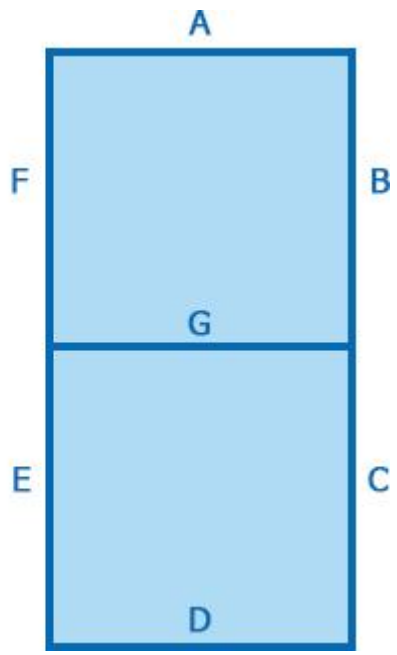

The truth table of Common Cathode Type BCD to the seven-segment decoder is given below:

Decimal Number	INPUT Lines				OUTPUT Lines						
	A	B	C	D	a	b	c	d	e	f	g
0	0	0	0	0	1	1	1	1	1	1	0
1	0	0	0	1	0	1	1	0	0	0	0
2	0	0	1	0	1	1	0	1	1	0	1
3	0	0	1	1	1	1	1	1	0	0	1
4	0	1	0	0	0	1	1	0	0	1	1
5	0	1	0	1	1	0	1	1	0	1	1
6	0	1	1	0	1	0	1	1	1	1	1

7	0	1	1	1	1	1	1	0	0	0	0
8	1	0	0	0	1	1	1	1	1	1	1
9	1	0	0	1	1	1	1	1	0	1	1

Important points:

1. For a seven-segment LED display of the Common Anode type, all we need to do is swap all of the '0's and '1's on the output side, i.e., for a, b, c, d, e, f, and g, swap all of the '1's for '0's, and use k-map to solve.
2. In the above truth table, the combinations of inputs represent the digits from 0 to 1.
3. The range of BCD numbers is 0 to 9, and the rest of the inputs are invalid.

Pre Lab Exercise:

a. What is BCD ?

BCD (Binary Coded Decimal) is a coding system in which each decimal digit (0–9) is represented separately by its 4-bit binary equivalent. Instead of converting the whole number into binary, each decimal digit is encoded individually.

Example:
Decimal 59
5 → 0101
9 → 1001

BCD = 0101 1001

b. How to convert decimal to BCD?

To convert a decimal number into BCD, each digit of the decimal number is converted individually into its 4-bit binary equivalent. The binary equivalents of all digits are then combined to form the BCD representation.

Example: Convert decimal 47 into
BCD 4 = 0100
7 = 0111

BCD = 0100 0111
Thus, BCD conversion is done digit by digit.

c. During design of BCD to 7-Segment decoder, what value is initialized to display 9 and How?
(a) 5 BH (b) 70 H (c) 73 H (d) 7B H

(d) 7B H

To display the decimal digit 9 on a seven-segment display, the segments a, b, c, d, f, and g must glow, while segment e remains OFF. The corresponding binary value for this combination is 1111011, which is equal to 7B in hexadecimal form. Therefore, the value initialized to display 9 is 7B H.

Verilog Code:

```
// BCD to Seven Segment Decoder
module bcd_to_7segment(
    input [3:0] bcd,
    output reg [6:0] seg   // a b c d e f g
);

always @(*)
begin
    case(bcd)

        4'b0000: seg = 7'b1111110; // 0
        4'b0001: seg = 7'b0110000; // 1
        4'b0010: seg = 7'b1101101; // 2
        4'b0011: seg = 7'b1111001; // 3
        4'b0100: seg = 7'b0110011; // 4
        4'b0101: seg = 7'b1011011; // 5
        4'b0110: seg = 7'b1011111; // 6
        4'b0111: seg = 7'b1110000; // 7
        4'b1000: seg = 7'b1111111; // 8
        4'b1001: seg = 7'b1111011; // 9

        default: seg = 7'b0000000; // invalid BCD

    endcase
end

endmodule
```

Marwadi University	**Marwadi University** **Faculty of Engineering and Technology** **Department of Information and Communication Technology**	
Subject: Digital Design using Verilog (01CT1619)	**Aim:** Write the Verilog code for designing BCD to seven segment decoder circuit.	
Experiment No: 09	**Date:**	**Enrollment No: 92301733025**

Test-bench:

```
module tb_bcd_to_7segment;

reg [3:0] bcd;
wire [6:0] seg;

// instantiate module
bcd_to_7segment uut (
    .bcd(bcd),
    .seg(seg)
);

initial
begin

$display("BCD    Seven Segment (abcdefg)");

bcd = 4'b0000; #10;
$display("%b     %b", bcd, seg);

bcd = 4'b0001; #10;
$display("%b     %b", bcd, seg);

bcd = 4'b0010; #10;
$display("%b     %b", bcd, seg);

bcd = 4'b0011; #10;
$display("%b     %b", bcd, seg);

bcd = 4'b0100; #10;
$display("%b     %b", bcd, seg);

bcd = 4'b0101; #10;
$display("%b     %b", bcd, seg);

```

Results:

```
BCD     Seven Segment (abcdefg)
0000      1111110
0001      0110000
0010      1101101
0011      1111001
0100      0110011
0101      1011011
0110      1011111
0111      1110000
1000      1111111
1001      1111011
```

Marwadi University	**Marwadi University** **Faculty of Engineering and Technology** **Department of Information and Communication Technology**	
Subject: Digital Design using Verilog (01CT1619)	**Aim:** Write the Verilog code for designing BCD to seven segment decoder circuit.	
Experiment No: 09	**Date:**	**Enrollment No: 92301733025**

Observation and Result Analysis:

The BCD to Seven Segment Decoder was successfully studied and implemented using Verilog HDL. BCD representation helps in displaying decimal digits in digital systems by converting each decimal digit into its 4- bit binary form. The decoder converts the BCD input into appropriate signals required to glow the corresponding segments of the seven-segment display. The correct segment pattern was verified for digits 0 to 9, confirming proper functioning of the circuit. This decoder is widely used in digital clocks, calculators, and display systems.

Post Lab Exercise:

a. Write verilog code, test bench and output for decimal to binary.

Verilog Code:

```
// Decimal to Binary Converter
module decimal_to_binary(
    input [3:0] decimal,      // decimal input (0-9)
    output [3:0] binary       // binary output
);

// direct assignment (same 4-bit representation)
assign binary = decimal;

endmodule
```

Testbench:

```
module tb_decimal_to_binary;

reg [3:0] decimal;
wire [3:0] binary;

// instantiate module
decimal_to_binary uut(
    .decimal(decimal),
    .binary(binary)
);

initial
begin

$display("Decimal    Binary");

decimal = 4'd0; #10;
$display("%d         %b", decimal, binary);

decimal = 4'd1; #10;
$display("%d         %b", decimal, binary);

decimal = 4'd2; #10;
$display("%d         %b", decimal, binary);

decimal = 4'd3; #10;
$display("%d         %b", decimal, binary);

decimal = 4'd4; #10;
$display("%d         %b", decimal, binary);
```

Marwadi University	**Marwadi University** **Faculty of Engineering and Technology** **Department of Information and Communication Technology**	
Subject: Digital Design using Verilog (01CT1619)	**Aim:** Write the Verilog code for designing BCD to seven segment decoder circuit.	
Experiment No: 09	**Date:**	**Enrollment No: 92301733025**

Results:

Decimal	Binary
0	0000
1	0001
2	0010
3	0011
4	0100
5	0101
6	0110
7	0111
8	1000
9	1001

b. Write verilog code, test bench and output for binary to BCD.

Verilog Code:

```
// Binary to BCD Converter
module binary_to_bcd(
    input [3:0] binary,      // 4-bit binary input (0-15)
    output reg [3:0] tens,   // tens place
    output reg [3:0] ones    // ones place
);

always @(*)
begin
    case(binary)

        4'b0000: begin tens=4'b0000; ones=4'b0000; end //0
        4'b0001: begin tens=4'b0000; ones=4'b0001; end //1
        4'b0010: begin tens=4'b0000; ones=4'b0010; end //2
        4'b0011: begin tens=4'b0000; ones=4'b0011; end //3
        4'b0100: begin tens=4'b0000; ones=4'b0100; end //4
        4'b0101: begin tens=4'b0000; ones=4'b0101; end //5
        4'b0110: begin tens=4'b0000; ones=4'b0110; end //6
        4'b0111: begin tens=4'b0000; ones=4'b0111; end //7
        4'b1000: begin tens=4'b0000; ones=4'b1000; end //8
        4'b1001: begin tens=4'b0000; ones=4'b1001; end //9

        4'b1010: begin tens=4'b0001; ones=4'b0000; end //10
        4'b1011: begin tens=4'b0001; ones=4'b0001; end //11
        4'b1100: begin tens=4'b0001; ones=4'b0010; end //12
        4'b1101: begin tens=4'b0001; ones=4'b0011; end //13
        4'b1110: begin tens=4'b0001; ones=4'b0100; end //14
        4'b1111: begin tens=4'b0001; ones=4'b0101; end //15

        default: begin tens=4'b0000; ones=4'b0000; end

    endcase
end

endmodule
```

Testbench:

```
// Testbench for Binary to BCD Converter

module tb_binary_to_bcd;

reg [3:0] binary;
wire [3:0] tens;
wire [3:0] ones;

// instantiate module
 binary_to_bcd uut(
    .binary(binary),
    .tens(tens),
    .ones(ones)
);

initial
begin

$display("Binary     BCD(tens ones)");

binary = 4'b0000; #10;
$display("%b       %b %b", binary, tens, ones);

binary = 4'b0001; #10;
$display("%b       %b %b", binary, tens, ones);

binary = 4'b0010; #10;
$display("%b       %b %b", binary, tens, ones);

binary = 4'b0011; #10;
$display("%b       %b %b", binary, tens, ones);

binary = 4'b0100; #10;
$display("%b       %b %b", binary, tens, ones);

binary = 4'b0101; #10;
$display("%b       %b %b", binary, tens, ones);

binary = 4'b0110; #10;
$display("%b       %b %b", binary, tens, ones);
```

```
binary = 4'b0111; #10;
$display("%b       %b %b", binary, tens, ones);

binary = 4'b1000; #10;
$display("%b       %b %b", binary, tens, ones);

binary = 4'b1001; #10;
$display("%b       %b %b", binary, tens, ones);

binary = 4'b1010; #10;
$display("%b       %b %b", binary, tens, ones);

binary = 4'b1011; #10;
$display("%b       %b %b", binary, tens, ones);

binary = 4'b1100; #10;
$display("%b       %b %b", binary, tens, ones);

binary = 4'b1101; #10;
$display("%b       %b %b", binary, tens, ones);

binary = 4'b1110; #10;
$display("%b       %b %b", binary, tens, ones);

binary = 4'b1111; #10;
$display("%b       %b %b", binary, tens, ones);

$finish;

end

endmodule
```

Results:

Marwadi University	**Marwadi University** **Faculty of Engineering and Technology** **Department of Information and Communication Technology**	
Subject: Digital Design using Verilog (01CT1619)	**Aim:** Write the Verilog code for designing BCD to seven segment decoder circuit.	
Experiment No: 09	**Date:**	**Enrollment No: 92301733025**

Binary	BCD(tens ones
0000	0000 0000
0001	0000 0001
0010	0000 0010
0011	0000 0011
0100	0000 0100
0101	0000 0101
0110	0000 0110
0111	0000 0111
1000	0000 1000
1001	0000 1001
1010	0001 0000
1011	0001 0001
1100	0001 0010
1101	0001 0011
1110	0001 0100
1111	0001 0101