Uflow®
Automation
INDIA

DAC SERIES
2/2 & 3/2 WAY DIRECT ACTING SOLENOID VALVE (NC / NO)

Automation simplified...

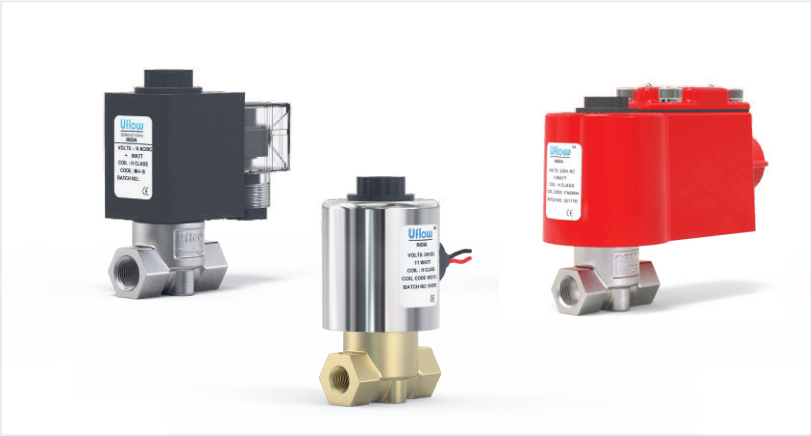

Solenoid Valve | Angle Seat Valve | Rotary Coupling | Pneumatic Directional Control Valve | Actuator | Cylinder | One Touch Fitting | Ball Valve | Butterfly Valve

Country of Origin - INDIA

TÜV NORD ISO 9001:2015

2/2 Way Direct Acting Solenoid Valve (NC / NO) - DAC Series

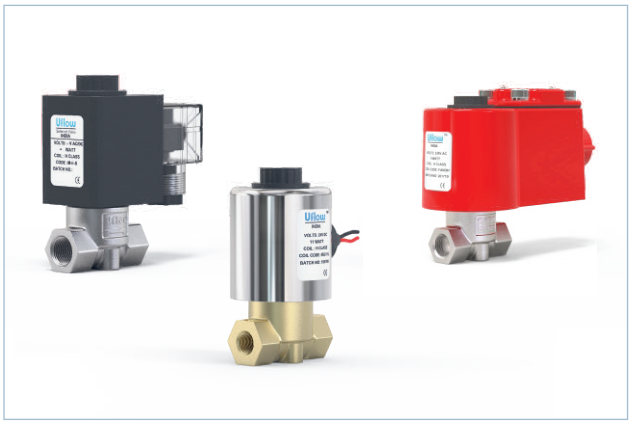

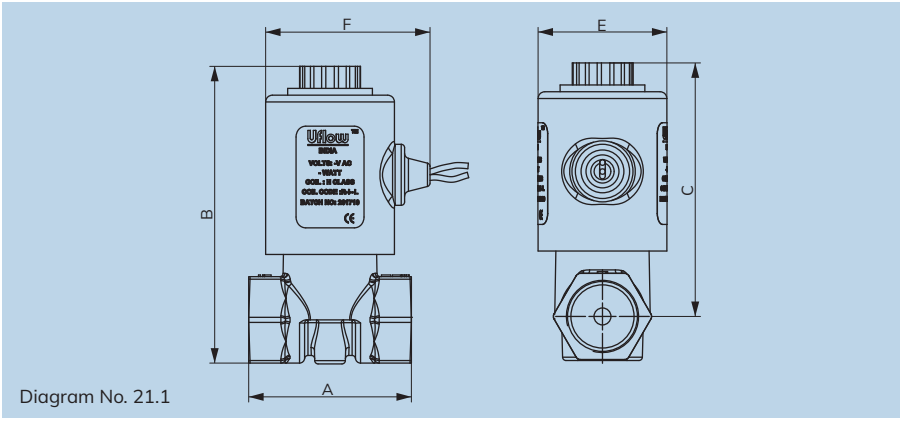

Diagram No. 21.1

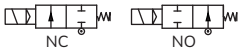

Specifications

Port :	⅛", ¼", ⅜" & ½"(Available BSP / NPT)
End Connection :	Screwed
Body Material :	SS ASTM A351 Grade CF8 / CF8M, Forged Brass, Aluminium

Diaphragm:	Nitrile (NBR)	EPDM	Viton (FKM)	Silicone
Media Temp:	-30°C to 90°C	-10°C to 140°C	-10°C to 180°C	-10°C to 60°C

Circumstance Temp :	-10°C to 70°C
Media :	Air, Chemical, Gas, Oil, Steam, Hot Water
Main Features :	Internal Parts are in superior corrosion resistance steel, (Equivalent to SS316L) Suitable for Food Industries, Pharmaceuticals, Chemical application & Highly corrosive environment.

Operating Voltage :	24AC	110AC	230AC	12DC	24DC
Power Consumption :	9W	9W	9W	10W	11W

Coil Features :	High Reliability Unaffected by Voltage Surges. Easy coil changes coil lockable in 4X90 position or freely movable in between as require.
Coil Housing :	IP65 Epoxy square coil, IP65 Metallic round enclosure, IP67 Flameproof enclosure, IP68 Weatherproof enclosure.
Optional Feature :	90% Power saver series also available & Latching as per Application.
Other Specification Data :	Available on Request. - Manual Override

NOTE: Use of filter in the inlet port is recommended.

Dimension - NC (All dimensions in mm)

All Dimensions are approx.

Model No.	Port Size	Diagram No.	A	B	C	E	F
DAC-DB104E040	¼"	21.1	43	83	74	38	49
DAC-D104E040	¼"	21.1	43	83	74	38	49
DAC-DB704E040	⅜"	21.1	48	88	75	38	49
DAC-DB204E040	½"	21.1	48	88	75	38	49
DAC-D202I120	½"	21.1	55	109	96	50	62
DAC-DB004C020	⅛"	21.1	38	58	49	28	33
DAC-D204E040	½"	21.1	48	88	75	38	49

In normally open valve dimension B&C will increase up to 8mm.

Section View

Technical Data

Model No.	Body Material	Port Size	Orifice (mm)		Min. Operating Pressure Kg/cm²	Max. Operating Pressure Kg/cm²	Seal & Diaphragm Material	Flow Factor Kv m³ / hr	
			NC	NO				NC	NO
DAC-DB017E018	Brass	⅛"	1.8	NA	0	60	**NBR** / FKM / EPDM	0.10	-
DAC-DB115E060	Brass	¼"	6	NA	0	1	**NBR** / FKM / EPDM	0.84	-
DAC-DB113E050	Brass	¼"	5	4	0	4	**NBR** / FKM / EPDM	0.73	0.54
DAC-DB104E040	Brass	¼"	4	2.5	0	10	**NBR** / FKM / EPDM	0.54	0.16
DAC-DB105E030	Brass	¼"	3	2.5	0	16	**NBR** / FKM / EPDM	0.20	0.16
DAC-DB111E025	Brass	¼"	2.5	1.8	0	25	**NBR** / FKM / EPDM	0.16	0.10
DAC-DB118E020	Brass	¼"	2	1.3	0	40	**NBR** / FKM / EPDM	0.11	0.05

Technical Data

Model No.	Body Material	Port Size	Orifice (mm)		Min. Operating Pressure Kg/cm²	Max. Operating Pressure Kg/cm²	Seal & Diaphragm Material	Flow Factor Kv m³ / hr	
			NC	NO				NC	NO
DAC-DB117E018	Brass	¼”	1.8	1.3	0	60	**NBR** / FKM / EPDM	0.10	0.05
DAC-DB120E015	Brass	¼”	1.5	0.9	0	100	**NBR** / FKM / EPDM	0.07	0.03
DAC-DB112E013	Brass	¼”	1.3	NA	0	150	**NBR** / FKM / EPDM	0.05	--
DAC-DB713E050	Brass	⅜”	5	4	0	4	**NBR** / FKM / EPDM	0.73	0.54
DAC-DB704E040	Brass	⅜”	4	2.5	0	10	**NBR** / FKM / EPDM	0.54	0.16
DAC-DB705E030	Brass	⅜”	3	2	0	16	**NBR** / FKM / EPDM	0.20	0.11
DAC-DB711E025	Brass	⅜”	2.5	1.8	0	25	**NBR** / FKM / EPDM	0.16	0.10
DAC-DB718E020	Brass	⅜”	2	1.5	0	40	**NBR** / FKM / EPDM	0.11	0.03
DAC-DB717E018	Brass	⅜”	1.8	1.3	0	60	**NBR** / FKM / EPDM	0.10	0.05
DAC-DB720E015	Brass	⅜”	1.5	0.9	0	100	**NBR** / FKM / EPDM	0.07	0.03
DAC-DB712E013	Brass	⅜”	1.3	NA	0	150	**NBR** / FKM / EPDM	0.05	--
DAC-DB215E060	Brass	½”	6	NA	0	1	**NBR** / FKM / EPDM	0.84	--
DAC-DB213E050	Brass	½”	5	4	0	4	**NBR** / FKM / EPDM	0.73	0.54
DAC-DB204E040	Brass	½”	4	2.5	0	10	**NBR** / FKM / EPDM	0.54	0.16
DAC-DB205E030	Brass	½”	3	2.5	0	16	**NBR** / FKM / EPDM	0.20	0.16
DAC-DB211E025	Brass	½”	2.5	1.8	0	25	**NBR** / FKM / EPDM	0.16	0.10
DAC-DB218E020	Brass	½”	2	1.3	0	40	**NBR** / FKM / EPDM	0.11	0.05
DAC-DB217E018	Brass	½”	1.8	1.3	0	60	**NBR** / FKM / EPDM	0.10	0.05
DAC-DB220E015	Brass	½”	1.5	0.9	0	100	**NBR** / FKM / EPDM	0.07	0.03
DAC-DB212E013	Brass	½”	1.3	NA	0	150	**NBR** / FKM / EPDM	0.05	--
DAC-D017E018	SS304	⅛”	1.8	NA	0	60	**NBR** / FKM / EPDM	0.16	--
DAC-D115E060	SS304	¼”	6	6	0	1	**NBR** / FKM / EPDM	0.84	0.84
DAC-D113E050	SS304	¼”	5	4	0	4	**NBR** / FKM / EPDM	0.73	0.54
DAC-D104E040	SS304	¼”	4	2.5	0	10	**NBR** / FKM / EPDM	0.54	0.16
DAC-D105E030	SS304	¼”	3	2	0	16	**NBR** / FKM / EPDM	0.20	0.11
DAC-D111E025	SS304	¼”	2.5	1.8	0	25	**NBR** / FKM / EPDM	0.16	0.10
DAC-D118E020	SS304	¼”	2	1.3	0	40	**NBR** / FKM / EPDM	0.11	0.05
DAC-D117E018	SS304	¼”	1.8	1.3	0	60	**NBR** / FKM / EPDM	0.10	0.05
DAC-D120E015	SS304	¼”	1.5	0.9	0	100	**NBR** / FKM / EPDM	0.07	0.03
DAC-D112E013	SS304	¼”	1.3	NA	0	150	**NBR** / FKM / EPDM	0.05	--
DAC-D713E050	SS304	⅜”	5	4	0	4	**NBR** / FKM / EPDM	0.73	0.54
DAC-D704E040	SS304	⅜”	4	2.5	0	10	**NBR** / FKM / EPDM	0.54	0.16
DAC-D705E030	SS304	⅜”	3	2	0	16	**NBR** / FKM / EPDM	0.20	0.11
DAC-D711E025	SS304	⅜”	2.5	1.8	0	25	**NBR** / FKM / EPDM	0.16	0.10
DAC-D718E020	SS304	⅜”	2	1.3	0	40	**NBR** / FKM / EPDM	0.11	0.05
DAC-D717E018	SS304	⅜”	1.8	1.3	0	60	**NBR** / FKM / EPDM	0.10	0.05
DAC-D720E015	SS304	⅜”	1.5	0.9	0	100	**NBR** / FKM / EPDM	0.07	0.03
DAC-D712E013	SS304	⅜”	1.3	NA	0	150	**NBR** / FKM / EPDM	0.05	--
DAC-DS226E170	SS304	½”	17	NA	0	0.200	**NBR** / SI / FKM / EPDM	3.20	--
DAC-D213E050	SS304	½”	5	4	0	4	**NBR** / FKM / EPDM	0.73	0.54
DAC-D204E040	SS304	½”	4	2.5	0	10	**NBR** / FKM / EPDM	0.54	0.16
DAC-D205E030	SS304	½”	3	2.5	0	16	**NBR** / FKM / EPDM	0.20	0.16
DAC-D211E025	SS304	½”	2.5	1.8	0	25	**NBR** / FKM / EPDM	0.16	0.10
DAC-D218E020	SS304	½”	2	1.3	0	40	**NBR** / FKM / EPDM	0.11	0.05
DAC-D217E018	SS304	½”	1.8	1.3	0	60	**NBR** / FKM / EPDM	0.10	0.05

Technical Data

Model No.	Body Material	Port Size	Orifice (mm)		Min. Operating Pressure Kg/cm²	Max. Operating Pressure Kg/cm²	Seal & Diaphragm Material	Flow Factor Kv m³ / hr	
			NC	NO				NC	NO
DAC-D220E015	SS304	½”	1.5	0.9	0	100	**NBR** / FKM / EPDM	0.07	0.03
DAC-D212E013	SS304	½”	1.3	NA	0	150	**NBR** / FKM / EPDM	0.05	--
DAC-DS202I120	SS304	½”	12	NA	0	2	**NBR** / SI / FKM / EPDM	2.10	--
DAC-D202I120	SS304	½”	12	NA	0	2	**NBR** / FKM / EPDM	2.10	--
DAC-D201I120	SS304	½”	12	12	0	0.500	**NBR** / FKM / EPDM	2.10	2.10
DAC-DB014C030	Brass	⅛”	3	NA	0	3	**NBR** / FKM / EPDM	0.20	--
DAC-DB004C020	Brass	⅛”	2	NA	0	10	**NBR** / FKM / EPDM	0.11	--
DAC-DB104C020	Brass	¼”	2	NA	0	10	**NBR** / FKM / EPDM	0.11	--
DAC-D102C020	SS304	¼”	2	NA	0	2	**NBR** / FKM / EPDM	0.11	--
DAC-D103C025	SS304	¼”	2.5	NA	0	7	**NBR** / FKM / EPDM	0.16	--
DAC-D104C020	SS304	¼”	2	NA	0	10	**NBR** / FKM / EPDM	0.11	--

3/2 Way Direct Acting Solenoid Valve (NC / NO) - DAC Series

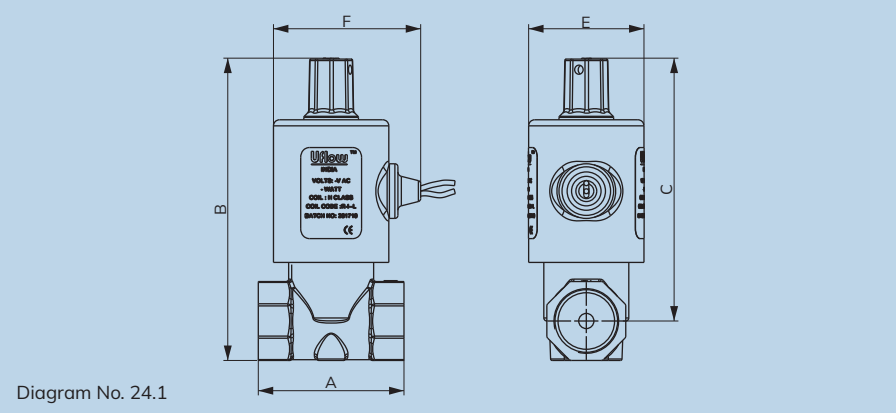

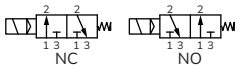

Specifications

Port :	⅛", ¼", ⅜" & ½"(Available BSP / NPT)
End Connection :	Screwed
Body Material :	SS ASTM A351 Grade CF8 / CF8M, Forged Brass, Aluminium
Diaphragm:	Nitrile (NBR) / EPDM / Viton (FKM)
Media Temp:	-30°C to 90°C / -10°C to 140°C / -10°C to 180°C
Circumstance Temp :	-10°C to 70°C
Media :	Air, Water, Chemical, Gas, Oil, Diesel, Kerosene, LPG.
Main Features :	Internal Parts are in superior corrosion resistance steel, (Equivalent to SS316L) Suitable for Food Industries, Pharmaceuticals, Chemical application & Highly corrosive environment.
Operating Voltage :	24AC / 110AC / 230AC / 12DC / 24DC
Power Consumption :	9W / 9W / 9W / 10W / 11W
Coil Features :	High Reliability Unaffected by Voltage Surges. Easy coil changes coil lockable in 4X90 position or freely movable in between as require.
Coil Housing :	IP65 Epoxy square coil, IP65 Metallic round enclosure, IP67 Flameproof enclosure, IP68 Weatherproof enclosure.
Optional Feature :	90% Power saver series also available.
Other Specification Data :	Available on Request. - Manual Override

NOTE: Use of filter in the inlet port is recommended.

Dimension - NC (All dimensions are in mm)

All Dimensions are approx.

Model No.	Port Size	Diagram No.	A	B	C	E	F
DAC-TB104E015	¼"	24.1	43	95	86	38	49
DAC-T104E015	¼"	24.1	43	95	85	38	49
DAC-TB704E015	⅜"	24.1	48	100	86	38	49
DAC-TB204E015	½"	24.1	48	100	87	38	49
DAC-T204E015	½"	24.1	48	100	86	38	49
DAC-TB004C012	⅛"	24.1	38	58	49	28	33
DAC-TB104C012	¼"	24.1	38	58	49	28	33

In normally open valve dimension B&C will increase up to 8mm.

Section View

Technical Data

Model No.	Body Material	Port Size	Orifice (mm)		Min. Operating Pressure Kg/cm²	Max. Operating Pressure Kg/cm²	Seal & Diaphragm Material	Flow Factor Kv m³ / hr	
			NC	NO				NC	NO
DAC-TB004E015	Brass	⅛"	1.5	NA	0	10	**NBR** / FKM / EPDM	0.07	--
DAC-TB119E025	Brass	¼"	2.5	NA	0	5	**NBR** / FKM / EPDM	0.16	--
DAC-TB104E020	Brass	¼"	2	1.5	0	10	**NBR** / FKM / EPDM	0.11	0.07
DAC-TB105E009	Brass	¼"	0.9	0.9	0	16	**NBR** / FKM / EPDM	0.03	0.03
DAC-TB111E009	Brass	¼"	0.9	0.9	0	25	**NBR** / FKM / EPDM	0.03	0.03
DAC-TB118E009	Brass	¼"	0.9	0.9	0	40	**NBR** / FKM / EPDM	0.03	0.03
DAC-TB719E025	Brass	⅜"	2.5	NA	0	5	**NBR** / FKM / EPDM	0.16	--
DAC-TB704E015	Brass	⅜"	1.5	1.5	0	10	**NBR** / FKM / EPDM	0.07	0.07
DAC-TB705E009	Brass	⅜"	0.9	0.9	0	16	**NBR** / FKM / EPDM	0.03	0.03

Technical Data

Model No.	Body Material	Port Size	Orifice (mm)		Min. Operating Pressure Kg/cm²	Max. Operating Pressure Kg/cm²	Seal & Diaphragm Material	Flow Factor Kv m³ / hr	
			NC	NO				NC	NO
DAC-TB711E009	Brass	⅜”	0.9	0.9	0	25	**NBR** / FKM / EPDM	0.03	0.03
DAC-TB219E025	Brass	½”	2.5	NA	0	5	**NBR** / FKM / EPDM	0.16	--
DAC-TB204E015	Brass	½”	1.5	1.5	0	10	**NBR** / FKM / EPDM	0.07	0.07
DAC-TB205E009	Brass	½”	0.9	0.9	0	16	**NBR** / FKM / EPDM	0.03	0.03
DAC-TB211E009	Brass	½”	0.9	0.9	0	25	**NBR** / FKM / EPDM	0.03	0.03
DAC-TB218E009	Brass	½”	0.9	0.9	0	40	**NBR** / FKM / EPDM	0.03	0.03
DAC-T119E025	SS304	¼”	2.5	NA	0	5	**NBR** / FKM / EPDM	0.16	--
DAC-T104E015	SS304	¼”	1.5	1.5	0	10	**NBR** / FKM / EPDM	0.07	0.07
DAC-T105E009	SS304	¼”	0.9	0.9	0	16	**NBR** / FKM / EPDM	0.03	0.03
DAC-T118E009	SS304	¼”	0.9	0.9	0	40	**NBR** / FKM / EPDM	0.03	0.03
DAC-T111E009	SS304	¼”	0.9	0.9	0	25	**NBR** / FKM / EPDM	0.03	0.03
DAC-T719E025	SS304	⅜”	2.5	NA	0	5	**NBR** / FKM / EPDM	0.16	--
DAC-T704E015	SS304	⅜”	1.5	1.5	0	10	**NBR** / FKM / EPDM	0.07	0.07
DAC-T705E009	SS304	⅜”	0.9	0.9	0	16	**NBR** / FKM / EPDM	0.03	0.03
DAC-T711E009	SS304	⅜”	0.9	0.9	0	25	**NBR** / FKM / EPDM	0.03	0.03
DAC-T219E025	SS304	½”	2.5	NA	0	5	**NBR** / FKM / EPDM	0.16	--
DAC-T204E015	SS304	½”	1.5	1.5	0	10	**NBR** / FKM / EPDM	0.07	0.07
DAC-T205E009	SS304	½”	0.9	0.9	0	16	**NBR** / FKM / EPDM	0.03	0.03
DAC-T211E009	SS304	½”	0.9	0.9	0	25	**NBR** / FKM / EPDM	0.03	0.03
DAC-TB014C025	Brass	⅛”	2.5	NA	0	3	**NBR** / FKM / EPDM	0.16	--
DAC-TB004C012	Brass	⅛”	1.2	NA	0	10	**NBR** / FKM / EPDM	0.04	--
DAC-TB104C012	Brass	¼”	1.2	NA	0	10	**NBR** / FKM / EPDM	0.04	--
DAC-TB103C012	Brass	¼”	1.2	NA	0	7	**NBR** / FKM / EPDM	0.04	--
DAC-TB114C025	Brass	¼”	2.5	NA	0	3	**NBR** / FKM / EPDM	0.16	--
DAC-T103C016	SS304	¼”	1.6	NA	0	7	**NBR** / FKM / EPDM	0.07	--
DAC-T718E009	SS304	⅜”	0.9	NA	0	40	**NBR** / FKM / EPDM	0.03	--

DAC - SERIES DIRECT ACTING SOLENOID VALVE MODEL CHART

DAC	D	-	-	2	02	-	-	I	-	120	-	-
01	02	03	04	05	06	07	08	09	10	11	12	13

01	SERIES
	DAC

02	PRODUCT TYPE
D	2 Way
T	3 Way

03	BODY MATERIAL
-	CF8
M	CF8M
B	Brass Forge
C	CF3M

04	SEAL MATERIAL
-	Nitrile
E	EPDM
V	Viton
S	Silicone
F	SPL Viton
U	Fluoro Silicone
J	Viton GLT
P	PTFE
T	Low Temp NBR
D	HNBR
K	PEEK
N	Buna N

05	PORT SIZE
-	1/8"
1	1/4"
2	1/2"
3	3/4"
7	3/8"
8	M14
O	Manifold Mount

07	PORT CONNECTION
-	BSP
N	NPT
P	BSPT
R1	Namur Bsp
T1	Namur Npt
2	Manifold
4	UNF
9	MM

06	PRESSURE RANGE		
00	0 to 350 Mbar	21	0 to 20 Bar
01	0 to 500 Mbar	26	0 to 200 MBar
02	0 to 2 Bar	30	0 to 1.5 Bar
03	0 to 7 Bar	31	0 to 6 Bar
04	0 to 10 Bar	32	0 to 8 Bar
05	0 to 16 Bar	34	0 to 10 PSI
07	0.5 to 8.5 Bar	38	0 to 12 Bar
11	0 to 25 Bar	39	0 to 150 Mbar
12	0 to 150 Bar	42	0 to 13 Bar
13	0 to 4 Bar	43	0 to 15 Bar
14	0 to 3 Bar	44	0 to 18 Bar
15	0 to 1 Bar	46	0 to 21 Bar
17	0 to 60 Bar	47	0 to 35 Bar
18	0 to 40 Bar	48	20 to 110 Bar
19	0 to 5 Bar	52	-1 to 1 Bar
20	0 to 100 Bar		

08	VALVE POSITION
-	NC
Z	NO
Y	Universal
D1	Diverting
X	Mixing
R	BI directional NC
S	BI directional NO

09	COIL DIA
A	8 MM AC
B	8 MM DC
C	10 MM AC
D	10 MM DC
E	14 MM AC
F	14 MM DC
G	14 MM FLP AC
H	14 MM FLP DC
I	18 MM AC
J	18 MM DC
K	30 MM AC
L	30 MM DC
M	28 MM
O	5.5 MM DC
Q	5 MM DC
T	12 MM AC
U	12 MM DC
V	18 MM FLP AC
W	18 MM FLP DC
5	14 MM SS FLP AC
6	14 MM SS FLP DC
7	14mm Bottom Cable Entry Exp. AC
7D	14mm Bottom Cable Entry Exp. DC
8	18mm Bottom Cable Entry Exp.AC
8D	18mm Bottom Cable Entry Exp.AC

10	FEATURES
-	W/O Mor
M	Turn Mor
P	Push Mor
M1	Push & Turn Mor
P1	Pull Mor
3	3 Position Mor

12	CONFIGURATION
-	REGULAR
C1	CONFIG 1
⋮	⋮
C9	CONFIG 9
CA	CONFIG 10
CB	CONFIG 11

13	VERSION
-	VERSION 0
V1	VERSION 1
⋮	⋮
V9	VERSION 9
VA	VERSION 10

11	ORIFICE IN MM		
100	10MM ORIFICE	016	1.6MM ORIFICE
120	12MM ORIFICE	018	1.8MM ORIFICE
152	15.2MM ORIFICE	020	2MM ORIFICE
170	17MM ORIFICE	022	2.2MM ORIFICE
180	18MM ORIFICE	025	2.5MM ORIFICE
200	20MM ORIFICE	028	2.8MM ORIFICE
250	25MM ORIFICE	030	3MM ORIFICE
300	30MM ORIFICE	031	3.1MM ORIFICE
005	0.5MM ORIFICE	035	3.5MM ORIFICE
006	0.6MM ORIFICE	040	4MM ORIFICE
007	0.7MM ORIFICE	045	4.5MM ORIFICE
008	0.8MM ORIFICE	050	5MM ORIFICE
009	0.9MM ORIFICE	060	6MM ORIFICE
010	1MM ORIFICE	064	6.4MM ORIFICE
012	1.2MM ORIFICE	070	7MM ORIFICE
013	1.3MM ORIFICE	080	8MM ORIFICE
015	1.5MM ORIFICE		

DAC-D202I120

1/2" 2 WAY DIRECT ACTING CF8-NITRILE-0 TO 2 Bar-
BSP-NC-18MM AC-12MM ORIFICE

Uflow® Automation INDIA

Global Presence...

Made In India

CONTACT US:

For Domestic Inquiry

sales@uflowvalve.com +91 85110 98822 www.uflowvalve.com

For Export Inquiry

export@uflowvalve.com +91 99744 77370 +91 78018 09550

Uflow Automation, Ankur Industrial Complex, Survey No: 275/276, Plot No: 31, Nr. Intol Cast Pvt. Ltd. Shapar(Veraval) Dist.: Gujarat (India) - 360 024.