EPSON

Application manual

Real Time Clock Module

RX8130CE

ETM50E-10

Product name	Product number
RX8130CE	X1B000311000100

NOTICE：PLEASE READ CAREFULLY BELOW BEFORE THE USE OF THIS DOCUMENT

1. The content of this document is subject to change without notice. Before purchasing or using Epson products, please contact with sales representative of Seiko Epson Corporation (“Epson”) for the latest information and be always sure to check the latest information published on Epson’s official web sites and resources.
2. This document may not be copied, reproduced, or used for any other purposes, in whole or in part, without Epson’s prior consent.
3. Information provided in this document including, but not limited to application circuits, programs and usage, is for reference purpose only. Epson makes no guarantees against any infringements or damages to any third parties’ intellectual property rights or any other rights resulting from the information. This document does not grant you any licenses, any intellectual property rights or any other rights with respect to Epson products owned by Epson or any third parties.
4. Epson has prepared this document carefully to be accurate and dependable, but Epson does not guarantee that the information is always accurate and complete. Epson assumes no responsibility for any damages you incurred due to any misinformation in this document.
5. Epson products listed in this document and our associated technologies shall not be used in any equipment or systems that laws and regulations in Japan or any other countries prohibit to manufacture, use or sell. Furthermore, Epson products and our associated technologies shall not be used for the purposes of military weapons development (e.g. mass destruction weapons), military use, or any other military applications. If exporting Epson products or our associated technologies, please be sure to comply with the Foreign Exchange and Foreign Trade Control Act in Japan, Export Administration Regulations in the U.S.A (EAR) and other export-related laws and regulations in Japan and any other countries and to follow their required procedures.
6. Epson assumes no responsibility for any damages (whether direct or indirect) caused by or in relation with your non-compliance with the terms and conditions in this document or for any damages (whether direct or indirect) incurred by any third party that you give, transfer or assign Epson products.
7. For more details or other concerns about this document, please contact our sales representative.
8. Company names and product names listed in this document are trademarks or registered trademarks of their respective companies.

●Disclaimer

1. Epson products are designed for use in general electronic equipment applications that do not require extremely high reliability or safety.

2. Epson does not represent or warrant that its products will not cause a failure for any particular application, except for cases where the failure is a direct result caused by defects in materials and workmanship of this product.
   If a product fails due to defects in materials and workmanship, to the maximum extent permitted by law, we will, at our sole discretion, refund or replace the affected product.

3. When products for used directly or indirectly in certain devices or applications (ex. Nuclear power, aerospace, infrastructure facilities, medical equipment, etc.) which are connected to or affect safety of human life or property, Customer is solely responsible for determining if the products and respective specifications are suitable for the intended use in particular customer applications. Customer shall implement necessary and proper safety design and measures (including redundant design, malfunction prevention design, etc.) to ensure reliability and safety before using the products in/with customer’s Equipment.

4. No dismantling, analysis, reverse engineering, modification, alteration, adaptation, reproduction, etc., of Epson products is allowed. Furthermore, any defects caused by this are not covered by the warranty.

©SEIKO EPSON CORPORATION 2025, All rights reserved.

ETM50E Revision History

(Note: As for old revision, Due to revision, some items do not match the latest page number.)

Rev. No.	Date	Page	Description
01	---	---	---
02	2015/10/05		Release
03	2016/5/10	1	Corrected a the block diagram.
		4	Add description to [3.2. Pin Functions].
		9	Corrected a [10.1. Characteristic for the fluctuation of the power supply]
		13	Corrected a [7) Clock output function]
		27	Corrected a [14.7.2. Related register of Battery backup switchover function]
04	2016/9/20	3	Updated the Recommended soldering pattern. Optimization of the text.
05	2016/1/23	2	Added terminal processing when output terminal is not used.
		3	Added typical value of external dimensions.
		3	Added recommended soldering pattern.
		6	Corrected Max. value of High- Level input voltage.
		8	Corrected reset delay time (at recovery form backup).
		9	Corrected access wait time.
		20	Changed 7) TSTP bit related table.
		21	Added timer circuit block diagram
		25	Added alarm circuit block diagram
		27	Added time update circuit block diagram
		30	Corrected table operation stages of voltage detection. 36 Added comment to wait time.
		36	Added comment to wait time.
		37	Added comments related to STOP bit in 3)The setting of the clock and calendar.
06	2019/7/31	42	Added address circulation table of auto increment function. -06 31 Jul 2019 5 Added Figure 4-4. Circuit EX4.
		5	Added Figure 4-4. Circuit EX4.
		9	Added Figure 9-1,9-2,9-3 Re-chargeable battery current
		17	Corrected Table 13-1. Register table (expression Z)
		20	Added Figure 14-1. Basic (32kHz oscillation, counter, FOUT) Function
		32 to 41	Fully revised (battery Backup switching)
		40	Reference characteristics of the charge current in VBAT.
		53	Added Figure 14-33. Typical MCU connection
		53	Added Figure 14-34 32kHz oscillator connection
		54	Added Tables
		55	Added Figures

07	2021/7/5	All	Table number. serialization
		All	Figure number. serialization
		All	The link to index was added to the all footer.
		7	*Power supply connection*, "VD" symbol was deleted. Ex: VD3.0 to 3.0 V
		9	*Recommended Operation Condition* As for interface voltage Min,. Both spec mentioned, INIEN=0 and INIEN=1.
		14	Optimized this chapter structure *10. Interface timing when power is turned ON / OFF*
		16	1) 2) *The Power-On Chart* was separated into two cases with and without battery. 3) Correction of errors of tF condition. Error: tF = -V_{DET}1 from "V_{DD} OFF". Correct: tF = V_{CLK} from "V_{DD} OFF". 4) Addition that describes the risk of not satisfying tR / tF 5) Description of *Table11* was updated.
		21	*13.2.2. Register initial value* Added description, that value are same in after software-Reset.
		39	*1) Graph is added for the charge current to Battery.* *Figure27 V_{BAT} charge current characteristics V_{DD} = 3.0 V, 5.5 V* *2) Charging circuit diagram is added for reference.* *Figure 28 Re-chargeable battery connection*
		40	Renewed the description of *INIEN-bit.*
		46	Updated note of *STOP-bit.*
		48, 49	Charge enabled timing was fine corrected in Timing Chart. *Figure 37* and *Figure 38*
		54	Software-Reset-Flow was added. *Software-Reset.*
		55	INIEN bit processing was added to *Flow-chart of initializing.*
		64	Pin connection was added for use as *32.768 kHz-Oscillator.*

-08	2022/05/10	9, 10	External connection examples have been added and updated. The case of doesn't use power switch function *Examples of external connection*
		11	Note has been added in *"5.1. External Dimensions".*
		12	The voltage specification is separated in by INIEN bit value. *" Table 4 Recommended Operation Condition"*
		19	Power on chart is added. *"10.3. Power-on order"*
		38	When UF is cleared, Time update interruption is released immediately. *"14.4.2. Time update interrupt function diagram"*
		40	Figure has been added that Default state of Power switch Block. *"15 Battery backup switchover function"*
		40	VF characteristics of internal Diode has been updated. Please refer Table 34 Reference characteristics of switching elements.
		42	Descriptions and notes have been added to INIEN and CHGEN. *"15.5. Related register of Battery backup switchover function"*
		28 38	The symbol of auto release time of Timer interrupt is changed to tRTN2 from tRTN, and the Time update interrupt symbol changed to tRTN1 from tRTN. *14.2. Wakeup Timer Interrupt Function* *14.4. Time Update Interrupt Function*
-09	2025/06/30	1	・Revised notes regarding use of this manual. ・Addition of disclaimer information.
-10	2026/01/30	33	Deleted (1) to (7) in the operation description.

Table of contents

ETM50E Revision History 2

Table of contents 5

1. Overview 7

2. Block Diagram 7

3. Terminal description 8
- 3.1. Terminal connections 8
- 3.2. Pin Functions 8

4. Examples of external connection 9
- 4.1. Examples of power supply connection 9
- 4.2. Example of connection circuit that does not use the power switching function 10

5. External Dimensions / Marking Layout 11
- 5.1. External Dimensions 11
- 5.2. Marking Layout 11

6. Absolute Maximum Ratings 12

7. Recommended Operating Conditions 12

8. Frequency Characteristics Operating supply voltage 12

9. Electrical Characteristics 13
- 9.1. DC characteristics 13
- 9.2. AC characteristics 15
- 9.3. AC characteristics(3) 16

10. Interface timing when power is turned ON / OFF 17
- 10.1. Restrictions of I^2C-Bus interface in the initial power on 17
- 10.2. Precautions for power ON / OFF 17
- 10.3. V_{DD} ON / OFF when using power switching (INIEN = 1) 18
- 10.4. V_{DD} ON / OFF when power switching is not used (INIEN = 0) 18
- 10.5. Power-on order 19

11. Reference Information 19
- 11.1. Reference Data 19

12. Application Notes 20

13. Overview of Functions and Registers 21
- 13.1. Overview of Functions 21
- 13.2. Register Table 22
  - 13.2.1. Register Table 22
  - 13.2.2. Register initial value and Read/Write operation Table 23
- 13.3. Description of registers 24
  - 13.3.1. Clock and calendar registers (0h ~ 16h) 24
  - 13.3.2. RAM registers (20h ~ 23h) 24
  - 13.3.3. Alarm registers (17h ~ 19h) 24
  - 13.3.4. Timer setting and Timer counter register for wakeup timer (1Ah ~ 1Eh) 24
  - 13.3.5. Function-related register 1 (1Ch ~ 1Eh) 24
  - 13.3.6. Function-related register 2 (1Fh) 25
  - 13.3.7. Digital offset register (30h) 25

14. Functions 26
- 14.1. Clock calendar explanation 26
  - 14.1.1. Clock counter 26
  - 14.1.2. Week counter 27
  - 14.1.3. Calendar counter 27
- 14.2. Wakeup Timer Interrupt Function 28

14.2.1. Related registers for function of wakeup timer interrupt function 28
14.2.2. Wakeup timer start timing 31
14.2.3. Wakeup timer interrupt interval (example) 32
14.2.4. Diagram of wakeup timer interrupt function 32
14.3. Alarm Interrupt Function 34
14.3.1. Related registers for Alarm interrupt functions. 34
14.3.2. Examples of alarm settings 35
14.3.3. Diagram of alarm interrupt function 36
14.4. Time Update Interrupt Function 37
14.4.1. Related registers for time update interrupt functions. 37
14.4.2. Time update interrupt function diagram 38
14.5. Oscillation stop detection function 39
14.5.1. Related registers for Oscillation stop and Voltage low detect function. 39
14.6. FOUT function 39
14.6.1. FOUT control register. 39
14.6.2. FOUT function Table. 39

15. Battery backup switchover function 40
15.1. Description of Battery backup switchover function 40
15.1.1 Default power switch state 40
15.2. Reference characteristics of switching elements. 40
15.3. Reference characteristics of the charge current 41
15.4. Re-Chargeable battery Voltage Current features 41
15.5. Related register of Battery backup switchover function 42
15.6. Detection voltage setting 47
15.7. Power supply control 49
15.8. Main power supply (V_{DD}) voltage and operation state (INIEN bit = 1) 50
15.9. Backup power supply (V_{BAT}) voltage and a charge state 51

16. Reset output function 52

17. Digital offset function 53
17.1. Digital offset register 53
17.2. Effect of the digital offset function to other functions 54

18. Flow-chart 55
18.1 Initializing example 55
18.2 Software Reset 56
18.3 Example of Initialization routine 57
18.4 Example of Initialization routine (only clock usage) 58
18.5 The setting of the clock and calendar 58
18.6 The reading of the clock and calendar 59
18.7 Setting example of the wakeup timer interrupt function 59
18.8 Setting example of the Alarm interrupt function 60

19 Serial communication 61
19.1 Overview of I^2C-Bus Interface 61
19.2 Data transfers 61
19.3 Starting and stopping I^2C-Bus communications 61
19.4 Slave address 61
19.5 System configuration 62
19.6 I^2C-Bus protocol 63

20 Circuit Diagram connection 65
20.1 Typical MCU connection 65
20.2 32.768 kHz oscillator application connection 66

21. Tables 67

22. Figures 68

RTC information and design tools 69

Build-in backup battery charge control function
SERIAL-INTERFACE REAL TIME CLOCK MODULE

RX8130 CE

- Built in frequency adjusted 32.768 kHz crystal unit.
- Interface type : I^2C-Bus interface (up to 400 kHz)
- Wide operating voltage range : 1.6 V to 5.5 V
- Wide timekeeper voltage range : 1.1 V to 5.5 V
- Auto power switching function : Switchover by main power supply monitor.
- Backup battery charge control function : For rechargeable lithium batteries.
- Low leak current : A leak current from a backup power supply pin. 5 nA Max.
- Reset function : At low supply voltage, external reset signal is generated.
- Low voltage detection : Supply voltage and backup voltage detection
- Time correction : Digital offset function
- The various function including full calendar, alarm, timer, etc.

1. Overview

RX8130CE is a real-time clock module of the I^2C serial interface system, 32.768 kHz crystal and oscillator is built-in it. The real-time clock function incorporates not only a calendar and clock counter for the year, month, day, day of the week, hour, minute, and second, but also a time alarm, wakeup timer, and time update interruption, among other features. By the backup battery charge control function and the interface power supply input pin, RX8130CE can support various power supply circuitries.
All these many functions are implemented in a thin, compact ceramic package, which makes it suitable for various kinds of small electronic devices, low power IoT devices etc.

2. Block Diagram

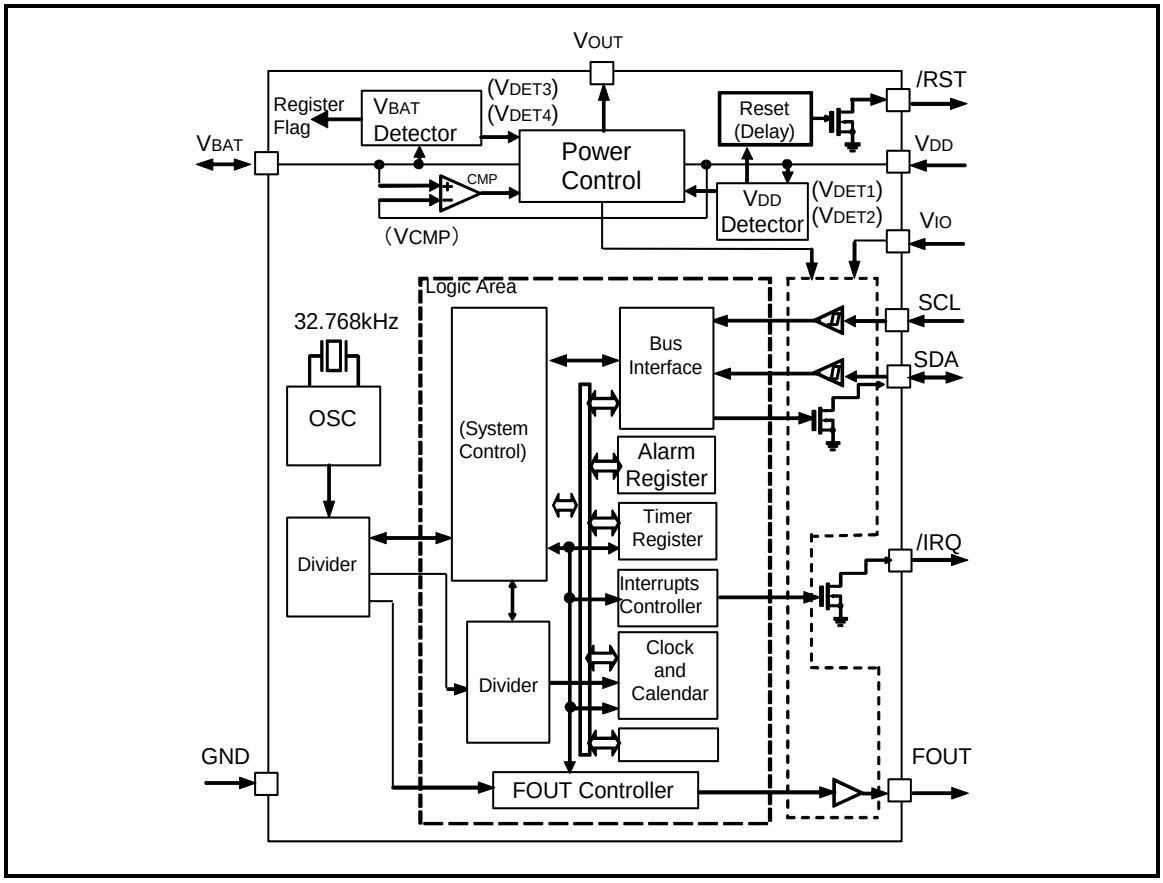

Figure 1 Block Diagram

3. Terminal description

3.1. Terminal connections

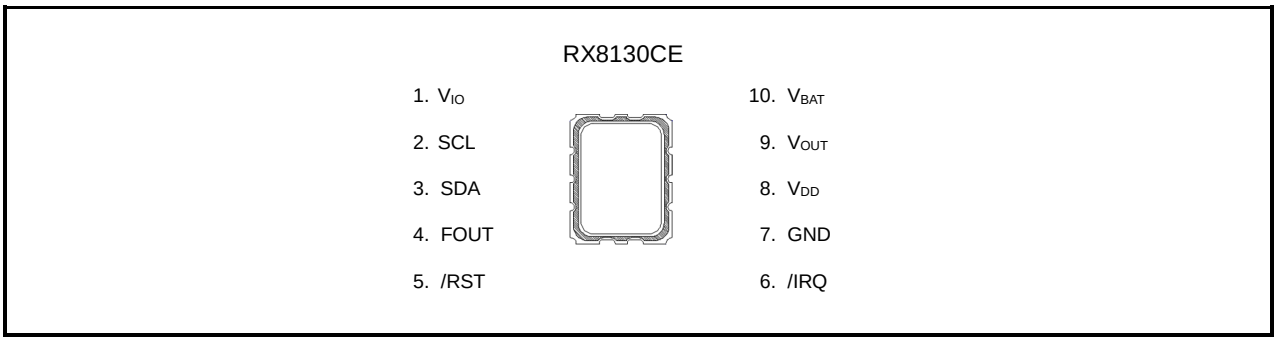

Figure 2 Package

3.2. Pin Functions

Table 1 Pin Description

Signal name	I/O	Function
SCL	Input	Serial clock input pin.
SDA	Bi-directional	Data input and output pin.
FOUT	Output	Frequency output pin with output control function. (CMOS) Output frequency can be selected as 32.768 k Hz, 1024 Hz, 1 Hz.
/ RST	Output	Even in the backup mode, this pin can operate. In case of V_{DD} voltage drop detection, a reset signal is outputted. (N-ch open drain) In case of V_{DD} voltage rise detection, it releases the reset signal after 60ms.
/ IRQ	Output	Interrupt output by Alarm and Timer events.(N-ch open drain) This pin can output even a backup mode.
V_{DD}	–	This is a power-supply pin for the internal logic.
V_{IO}	–	This is an interface power supply pin. Connect the same power supply as the MCU.
V_{OUT}	–	Internal voltage output pin. Connect smoothing capacitor of 1.0uF
V_{BAT}	–	This is a power supply pin for backup battery. This is a pin to connect a large-capacity capacitor, a secondary battery, and a primary battery. In a backup mode, the voltage is supplied inside by this pin.
GND	–	Connected to a ground.

Note: Connect a bypass capacitor rated at least 0.1μF between power supply pins and GND pin.
Note: Input pins are able to input up to 5.5V regardless of V_{IO} applied voltage.
Note: Open drain pins are able to Pull-up to 5.5V regardless of V_{IO} applied voltage.
Note: Use the FOUT, /RST, /IRQ terminals as Open when not in use. Don't connected to GND or V_{DD}

4. Examples of external connection

4.1. Examples of power supply connection

When using a secondary battery (INIEN bit = 1, CHGEN bit = 1)

When V_{DD} is less than or equal to V_{DET1}, the / RST output is asserted to Low regardless of the V_{IO} voltage.

At the same time, the I^2C interface and FOUT output are disabled.

When V_{DD} drops below $-V_{DET2}$, the RTC power supply is switched from V_{DD} to V_{BAT}.

A case of common power source of V_{DD} and V_{IO}.

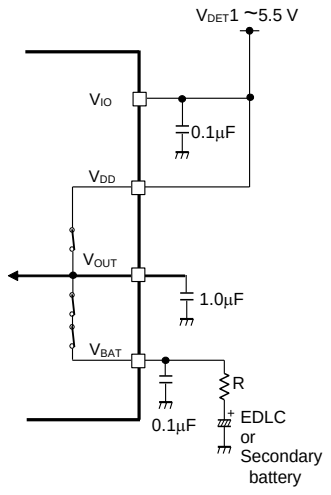

Figure 3 Circuit EX1

A case of The separated power source.

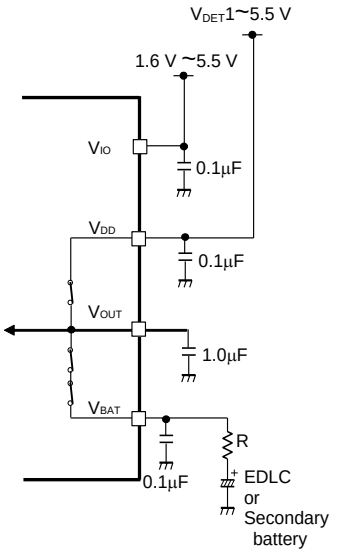

Figure 4 Circuit EX2

When using primary battery (INIEN bit = 1, CHGEN bit = 0)

When V_{DD} is less than or equal to V_{DET1}, the / RST output is asserted to Low regardless of the V_{IO} voltage.

At the same time, the I^2C interface and FOUT output are disabled.

When V_{DD} drops below $-V_{DET2}$, the RTC power supply is switched from V_{DD} to V_{BAT}.

A case of common power source of V_{DD} and V_{IO}.

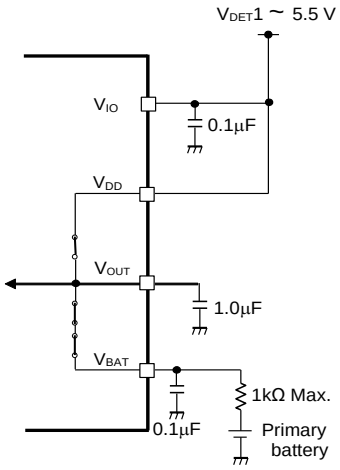

Figure 5 Circuit EX3

A case of The separated power source.

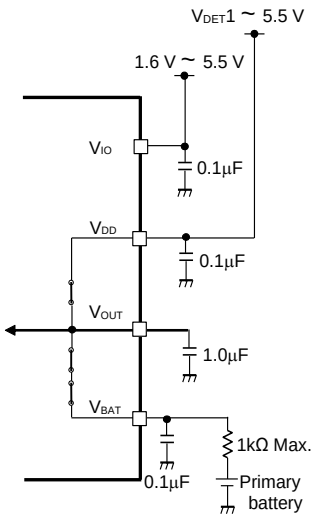

Figure 6 Circuit EX4

4.2. Example of connection circuit that does not use the power switching function

A case of not using the power switching function.(INIEN bit = 1, CHGEN bit = 0) Power is always supplied from V_{DD}, but for stable operation, do not open V_{BAT} and connect it to V_{DD}. When V_{DD} is V_{DET1} or less, the / RST output is asserted to Low regardless of the V_{IO} voltage, and the I^2C interface and FOUT output are disabled.	
When I^2C-Bus and V_{DD} are the same power source, Please use I^2C with more than V_{DET1}. RTC data is updated in 1.1 V minimum.	When the I^2C voltage and V_{DD} voltage are different, please use V_{DD} more than V_{DET1} and V_{IO} more than 1.6V.
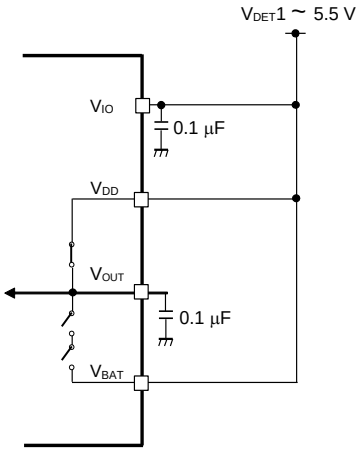	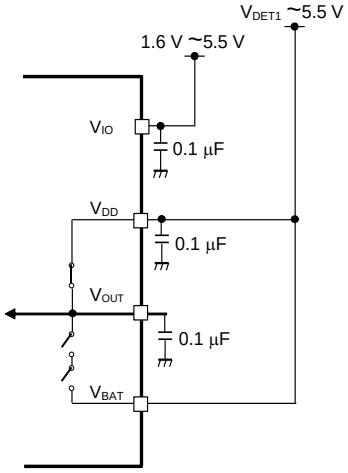
Figure 7 Circuit EX5	**Figure 8 Circuit EX6**

A case of not using the power switching function.(INIEN bit = 0, CHGEN bit = 0) When V_{DD} is less than V_{DET1} and the RTC is used with INIEN = 0 of after power-on reset. Power is always supplied from V_{DD}, but for stable operation, do not open V_{BAT} and connect it to V_{DD}.	
When I^2C-Bus and V_{DD} are the same power source, Please use I^2C in more than 1.6V. I^2C is not disabled even if V_{DD} is below V_{DET1} voltage. RTC data is updated in 1.1 V minimum.	When the I^2C voltage and V_{DD} voltage are different, please use V_{DD} more than V_{DET1} and V_{IO} more than 1.6V. I^2C is not disabled even if V_{DD} is below V_{DET1} voltage. RTC data is updated in 1.1 V minimum.
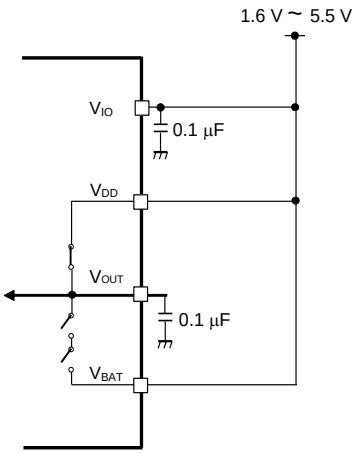	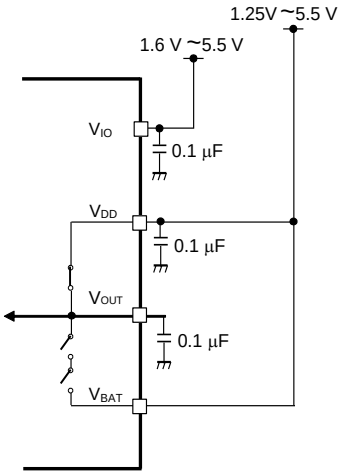
Figure 7 Circuit EX7	**Figure 8 Circuit EX8**

For details on the timing of power supply and register access, refer to "10. I^2C interface timing", when power is turned on / off". Please iInstall each bypass capacitor as close as possible to V_{DD}, V_{BAT}, V_{IO}, V_{OUT}.

5. External Dimensions / Marking Layout

5.1. External Dimensions

RX8130CE

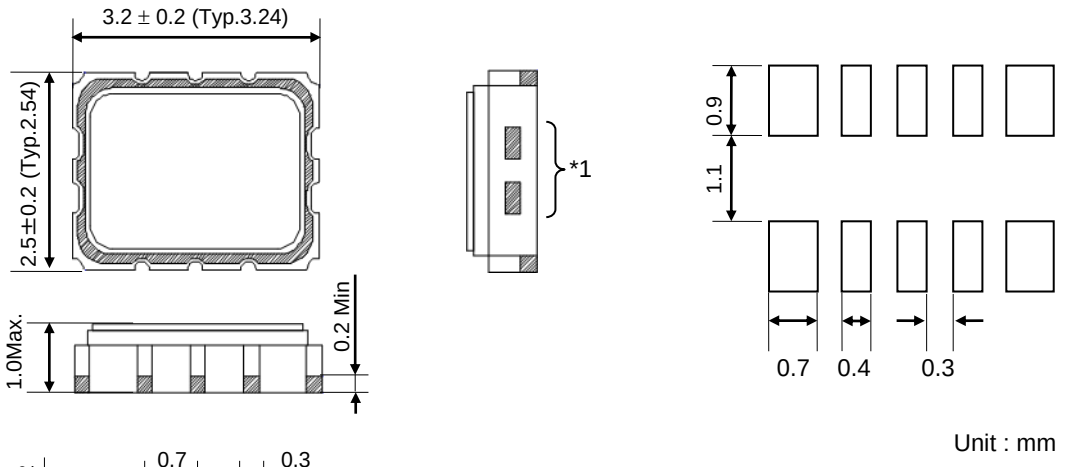

∗1. The metal pads on the short side of the 1st and 10th pins of the package are inspection pads for the crystal unit.
For stable oscillation, make sure that leakage current due to condensation or dust does not occur between these pads.
The metal pads on the short side of the 5-pin and 6-pin sides are not connected inside the RTC.

Figure 9 External Dimension and Soldering pattern

5.2. Marking Layout

RX8130CE

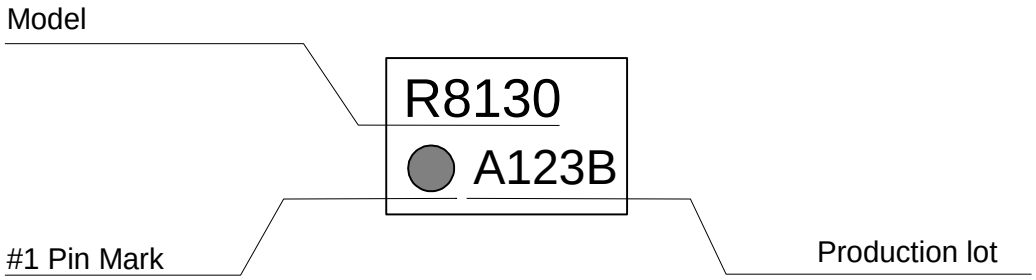

Contents displayed indicate the general markings and display, but are not the standards for the fonts, sizes and positioning.

Figure 10 Marking Layout

6. Absolute Maximum Ratings

Table 2 Absolute Maximum Rating

Item	Symbol	Condition	Rating	Unit
Supply voltage	V_{DD}	–	–0.3 ~ +6.5	V
Internal voltage	V_{OUT}	–	–0.3 ~ +6.5	V
Backup supply voltage	V_{BAT}	–	–0.3 ~ +6.5	V
Interface supply voltage	V_{IO}	–	–0.3 ~ +6.5	V
Input voltage 1	V_{IN1}	SCL, SDA	–0.3 ~ +6.5	V
Output voltage 1	V_{OUT1}	/RST, /IRQ, SDA	–0.3 ~ +6.5	V
Output voltage 2	V_{OUT2}	FOUT	-0.3 ~ V_{IO}+0.3	V
		When stored separately, without packaging	–55 ~ +125	°C

7. Recommended Operating Conditions

Table 3 Recommended Operation Condition

Unless otherwise specified, GND = 0 V , Ta = –40 °C to +85 °C

Item	Symbol	Condition	Min.	Typ.	Max.	Unit
Operating supply voltage	V_{DD}	INIEN = 0	1.25	3.0	5.5	V
		INIEN = 1	$V_{DET}1$	3.0	5.5	V
Interface supply voltage	V_{IO}	INIEN=0	1.6	3.0	5.5	V
		INIEN=1 $V_{DD} > V_{DET1}$				
Clock supply voltage	V_{CLK}	Backup operation mode (V_{OUT})	1.1	3.0	5.5	V
Operating temperature	T use	No condensation	-40	+25	+85	°C

Minimum clock supply voltage of V_{CLK} is available after initializing in V_{DD}>V_{DET}11.

8. Frequency Characteristics Operating supply voltage

Table 4 Frequency Characteristics

Unless otherwise specified, GND = 0 V , Ta = –40 °C to +85 °C

Item	Symbol	Condition	Min.	Typ.	Max.	Unit
Output frequency	fo			32.768 (Typ.)		kHz
Frequency stability	Δ f / f	Ta = +25 °C V_{DD} = 3.0 V		5 ± 23 (*1)		× 10^{-6}
Frequency/voltage characteristics	f / V	Ta = +25 °C V_{DD} = 1.1 V ~ 5.5 V	–2		+2	× 10^{-6} / V
Frequency/temperature characteristics	Top	Ta = –20 °C ~ +70 °C V_{DD} = 3.0 V ; +25 °C reference	–120		+10	× 10^{-6}
Oscillation start time	t_Str	V_{DD} = 2.75 V ~ 5.5 V Internal Crystal oscillation start		0.19	1.0	s
Aging	fa	Ta = +25 °C , V_{BAT} = 3.0 V ; first year	–5		+5	× 10^{-6} / year

*1) The monthly error is equal to ±60 s Max. (excluding offset) Clock accuracy calculation Excel is available.->Download.

9. Electrical Characteristics

9.1. DC characteristics

Table 5 DC characteristics (1)

Unless otherwise specified, GND = 0 V , V_{BAT} = V_{DD} = 1.1 V ~ 5.5 V, V_{IO} = 1.6 V ~ 5.5 V Ta = –40 °C to +85 °C

Item	Symbol	Condition	Min.	Typ.	Max.	Unit
Current consumption in normal operation mode without FOUT (1)	I_{DD}	SCL = SDA = "H" , F_{OUT} = OFF, /IRQ = OFF, V_{DD}=V_{IO} = 3.0 V, -40 °C ~ +85 °C CHGEN = 0b or V_{BAT} ≧ V_{DET}3		1500	1600	nA
Current consumption in normal operation with FOUT (2)	I_{32k}	SCL = SDA = "H" , FOUT = 32.768 kHz, /IRQ = OFF, V_{DD}=V_{IO} = 3.0 V, -40 °C ~ +85 °C FOUT pin CL = 15 pF CHGEN = 0b or V_{BAT} ≧ V_{DET}3		3.5	4.0	µA
Current consumption in backup mode(3)	I_{BAT}	SCL = SDA = "L" , VBAT = 3.0 V ,V_{DD}=V_{IO} = 0.0 V, -40 °C ~ +85 °C		300	500	nA
Detector Threshold Voltage1 (rising edge of V_{DD})	+V_{DET11}	2.75 V setting Reset-releases	2.72	2.80	2.88	V
Detector Threshold Voltage1 (falling edge of V_{DD})	-V_{DET11}	2.75 V setting Reset output	2.67	2.75	2.83	V
Detector Threshold Voltage2 (rising edge of V_{DD})	+V_{DET12}	2.7 V setting Reset-releases	2.67	2.75	2.83	V
Detector Threshold Voltage2 (falling edge of V_{DD})	-V_{DET12}	2.7 V setting Reset output	2.62	2.70	2.78	V
Detector Threshold Voltage3 (rising edge of V_{DD})	+V_{DET2}	Switching voltage from V_{BAT} to V_{DD}	1.25	1.35	1.45	V
Detector Threshold Voltage3 (falling edge of V_{DD})	-V_{DET2}	Switching voltage from V_{DD} to V_{BAT}	1.20	1.30	1.40	V
Detector Threshold Voltage1 (rising edge of V_{BAT})	+V_{DET31}	Charge stop voltage (full charge) BFVSEL=00b	2.94	3.02	3.10	V
Detector Threshold Voltage1 (falling edge of V_{BAT})	-V_{DET31}	Recharge voltage. BFVSEL=00b	2.89	2.97	3.05	V
Detector Threshold Voltage2 (rising edge of V_{BAT})	+V_{DET30}	Charge stop voltage (full charge) BFVSEL=10b	2.84	2.92	3.00	V
Detector Threshold Voltage2 (falling edge of V_{BAT})	-V_{DET30}	Recharge voltage. BFVSEL=10b	2.79	2.87	2.95	V
Detector Threshold Voltage3 (rising edge of V_{BAT})	+V_{DET32}	Charge stop voltage (full charge) BFVSEL=01b	3.00	3.08	3.16	V
Detector Threshold Voltage3 (falling edge of V_{BAT})	-V_{DET32}	Recharge voltage. BFVSEL=01b	2.95	3.03	3.11	V
V_{BAT} end voltage	-V_{DET4}	Low V_{BAT} detection Register flag VBLF = 1b	2.32	2.40	2.48	V
V_{DD}-V_{OUT} off-leak current	I_{SW1}	V_{OUT}=3.0 V V_{DD}=0.0 V			5.0	nA
V_{BAT}-V_{OUT} off-leak current	I_{SW2}	V_{BAT}=3.0 V V_{OUT}=0.0 V			5.0	nA

Table 6 DC characteristics(2)

Unless otherwise specified GND = 0 V V_{BAT} = V_{DD} = 1.1V~5.5V V_{IO}=1.6V ~5.5V Ta = –40 °C to +85 °C

Item	Symbol	Condition		Min.	Typ.	Max.	Unit
V_{OUT} output voltage 1	V_{VOUT1}	V_{DD} = 3.0 V I_{OUT} = 1 mA			V_{DD}-0.06		V
V_{OUT} output voltage 2	V_{VOUT2}	V_{BAT} = 3.0 V I_{OUT} = 0.1 mA			V_{BAT}-0.02		V
High-level input voltage	V_{IH1}	SCL, SDA		0.8 × V_{IO}		5.5	V
Low-level input voltage	V_{IL}	SCL, SDA		GND – 0.3		0.2 × V_{IO}	V
High-level output voltage	V_{OH}	FOUT	I_{OH} = -1 mA	V_{IO}–0.5		V_{IO}	V
Low-level output voltage	V_{OL1}	FOUT	I_{OL} = 1 mA	GND		GND+0.5	V
	V_{OL2}	/RST,/IRQ	V_{IO} = 5 V, I_{OL} = 1 mA	GND		GND+0.25	V
	V_{OL3}		V_{IO} = 3 V, I_{OL} = 1 mA	GND		GND+0.4	V
	V_{OL4}	SDA	V_{IO} ≥ 2 V, I_{OL} = 3 mA	GND		GND+0.4	V

Battery life calculation Excel is available.->Download.

9.2. AC characteristics

Table 7 AC characteristics

Unless otherwise specified GND = 0 V V_{IO} = 1.6 V ~5.5 V Ta = -40°C ~ +85°C

Item	Symbol	Standard-Mode (f_{SCL}=100 kHz)		Fast-Mode (f_{SCL}=400 kHz)		Unit
		Min.	Max.	Min.	Max.	
SCL clock frequency	f_{SCL}		100		400	kHz
Start condition setup time	$t_{SU;STA}$	4.7		0.6		µs
Start condition hold time	$t_{HD;STA}$	4.0		0.6		µs
Data setup time	$t_{SU;DAT}$	250		100		ns
Data hold time	$t_{HD;DAT}$	0		0		ns
Stop condition setup time	$t_{SU;STO}$	4.0		0.6		µs
Bus idle time between start condition and stop condition	t_{BUF}	4.7		1.3		µs
Time when SCL = "L"	t_{LOW}	4.7		1.3		µs
Time when SCL = "H"	t_{HIGH}	4.0		0.6		µs
Rise time for SCL and SDA	t_r		1.0		0.3	µs
Fall time for SCL and SDA	t_f		0.3		0.3	µs
Allowable spike time on bus	t_{SP}		50		50	ns

- Timing chart

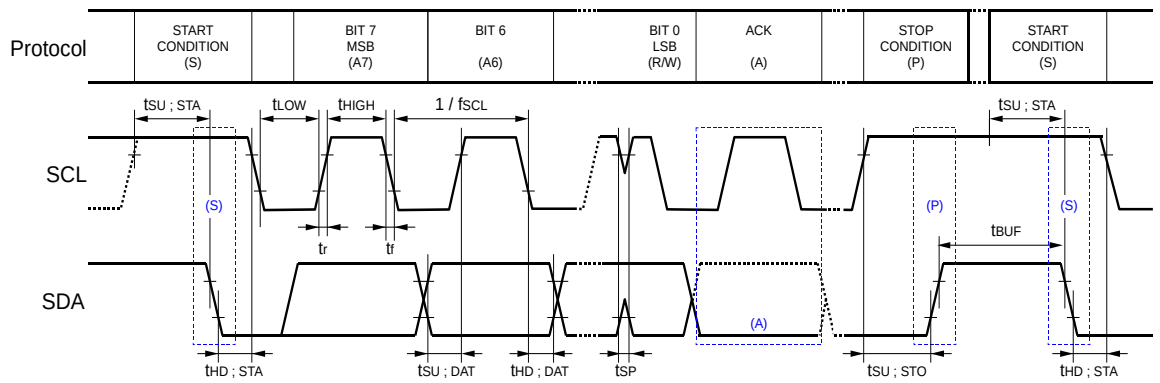

Figure 11 I²C-Bus Interface Timing Chart

Warning: When accessing this device, all communication from transmitting the start condition to transmitting the stop condition after access should be completed within 0.95 seconds.
If such communication requires 0.95 seconds or longer, the I²C-Bus interface is reset by the internal bus timeout function.
When bus-time-out occur, SDA turns to Hi-Z input mode.

Note: During access to the time registers, the time counting is on hold. This means that up to 1 second can be "lost" in case of unsuccessful communication as mentioned above.
Please make sure to send I²C start condition before actual transmission of the RTCs slave address as otherwise the slave address appears to be shifted by 1 bit.

Table 8 AC characteristics (FOUT)

※Unless otherwise specified GND = 0 V , V_{IO} = 1.6 V ~ 5.5 V , Ta= –40 °C ~ +85 °C

Item	Symbol	Condition	Min.	Typ.	Max.	Unit
FOUT symmetry	SYM	50% V_{IO} Level	40		60	%

9.3. AC characteristics(3)

Table 9 AC Characteristics (Reset)

Item	symbol	Min.	Typ.	Max.	unit
Reset internal delay time	t_{DELAY}		60		ms
Reset delay time (Initial power ON)	t_{DELAY_F}		250 ($t_str + t_{DELAY}$)		ms

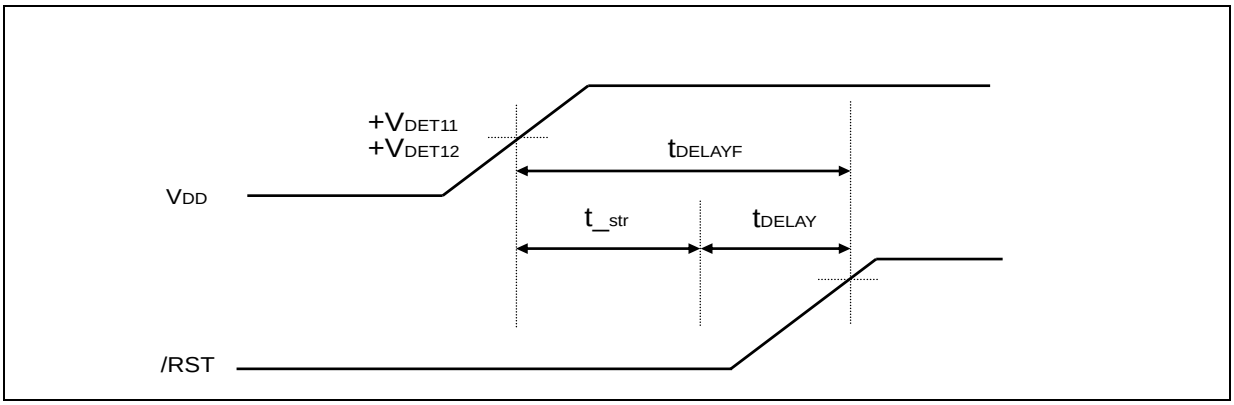

* t_str is oscillation startup time. See *"Table4"*.

Figure 12 Reset signal timing chart (Power Initial Supply)

Table 10 Reset timing

Item	symbol	Min.	Typ.	Max.	unit
Voltage detection time to reset release.	t_{int}			35	ms
Reset delay time (Recovery from Backup) $t_int + t_{DELAY}$	t_{DELAY_B}	60		95	ms

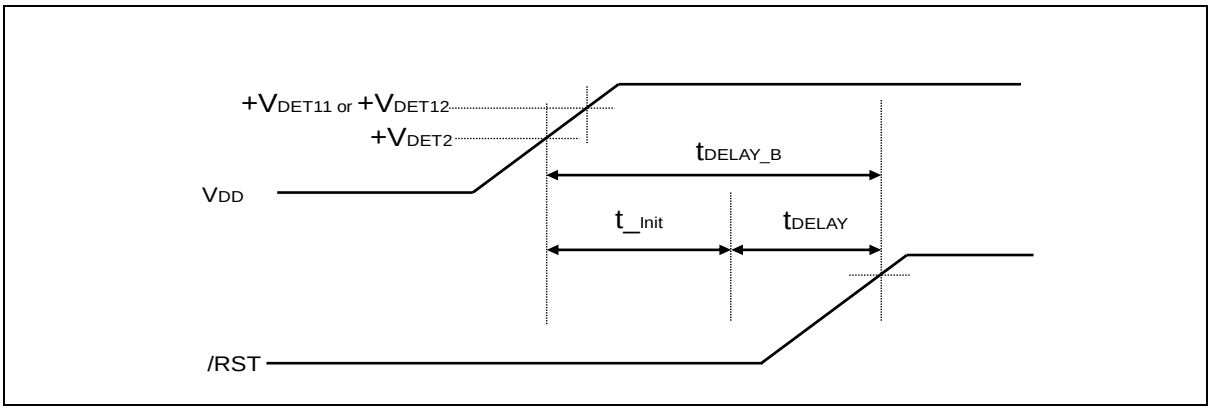

t_int is an intermittence drive timing of a V_{DET2} detect circuit. Maximum value is 35 ms.

Figure 13 Reset signal timing chart (Backup resume)

10. Interface timing when power is turned ON / OFF

10.1. Restrictions of I²C-Bus interface in the initial power on.

The operation of the RTC register is linked to the oscillation clock of the built-in crystal unit. □
Therefore, it will not operate normally when the oscillation is stopped.
It is recommended that the initialization at the time of initial power-on is performed after the oscillation start time t_str characteristic.

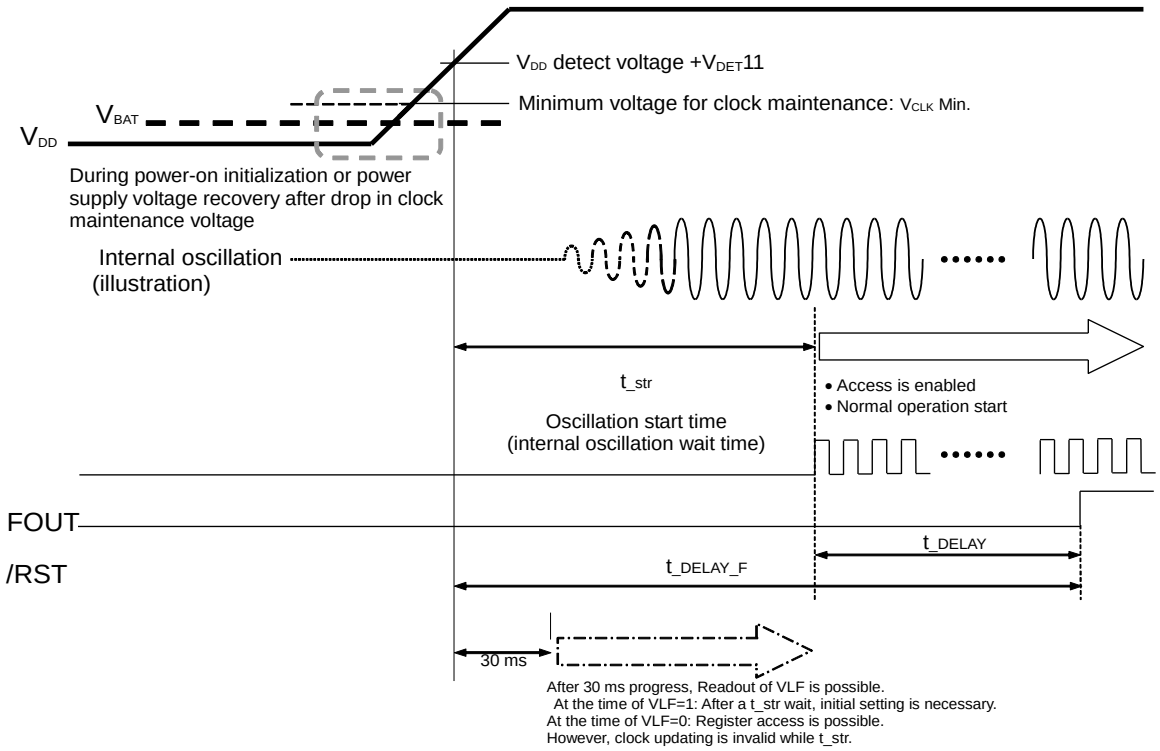

Figure 14 Power supply initial sequence

10.2. Precautions for power ON / OFF

1: To ensure that the power-on reset works at the initial power-on keep V_{DD}=V_{BAT}=GND for 10 seconds or more before V_{DD} = ON.
2: Initial power-on tR1 is a necessary condition for enabling power-on reset.
If this condition is not satisfied, power-on reset may not work. As a result, the time accuracy and current consumption may not meet the specifications. Please reset by software. See *18.2 Software Reset.*
3: When fluctuation of V_{DD} is out of specifications, tF or tR2, it may be occur the followings, a momentary stop of crystal oscillation, a set of VLF by V_{OUT} voltage drop lower than V_{CLK} and so on.
4: The timing at which the I²C-Bus interface is enabled differs in when the initial power of V_{DD} is turned on and when V_{DD} is turned on from backup mode.
See the tCL and tCU specifications in the chart below.
5: These specifications don't mean a noise characteristic of a power supply of RTC.
Do not use amplitude signal output from a signal generator etc, as a power source.

10.3. V_{DD} ON / OFF when using power switching (INIEN = 1)

See *"4.1. Examples of power supply connection"* Circuit EX1, 2, 3.

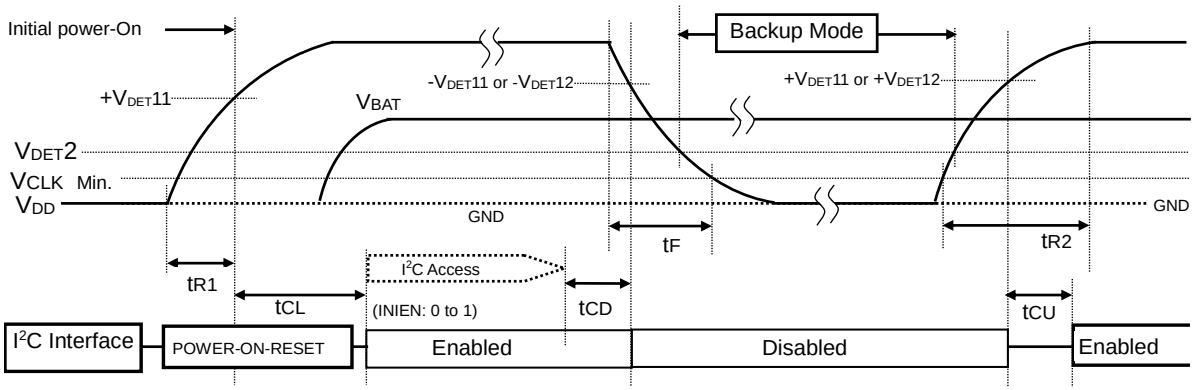

Figure 15 Power-On sequence1

10.4. V_{DD} ON / OFF when power switching is not used (INIEN = 0)

See *"4.1. Examples of power supply connection"* Circuit EX4.

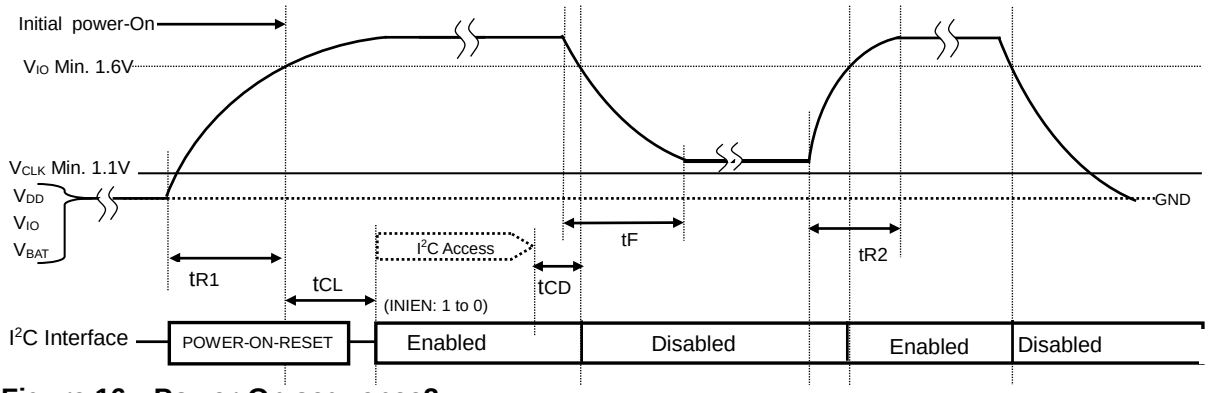

Figure 16 Power-On sequence2

Table 11 Power supply characteristics

Item	Symbol	Condition	Min.	Typ.	Max.	Unit
Power supply rise time	t_{R1}	From GND to V_{DD} = +V_{DET11}	0.1	-	10	ms / V
Access wait time	t_{CL}	V_{DD} = +V_{DET11} to Access start		-	-30	ms
Access suspended time	t_{CD}	The time from the end of I²C access to the disable of I²C	0	-	-	ms
Power supply fall time	t_F	From V_{DD} to V_{DD} = V_{CLK}	1	-	-	ms / V
Power supply rise time	t_{R2}	Time to restore V_{DD} to operating voltage	1	-	-	ms / V
Access wait time	t_{CU}	V_{DD}=+V_{DET1}x to Access start		-	35	ms

tR1, tR2, and tF specify that there is no voltage fluctuation faster / slower than the Min / Max specifications within the specified section. The risk when specifications were not satisfied, refer to the following.

Item	Risk of fast fluctuations	Risk of slow fluctuations
tR1	Power-On-Reset doesn't occur.	
tR2	The FOUT waveform disappears momentarily, and clock time is momentarily delayed. A data of RTC loss. A set of VLF.	None
tF		

V_{DD} and V_{BAT} in Figures 13 and 14 are the voltages of V_{DD} and V_{BAT} pins of RX8130CE.
Regarding access to the clock register after the initial power-on,
, See *"10.1 restrictions of I2C interface in the initial power on"*. The clock from FOUT is outputted after tCU.
When status of V_{DD} = V_{BAT} = GND doesn't keep more than 10seconds before initial power-on, the Power-On-Reset may not work even if the tR / tF specifications are satisfied.

10.5. Power-on order

V_{DD} and V_{IO} separate and can give different power supplies.
In specifications range, the voltage relations(V_{DD} and V_{IO}) are free.
In the status that the voltage more than V_{DET+} was supplied to main power-source V_{DD}, if V_{IO} is unstable with the middle voltage between GND-V_{DD}, a through-current will occur.
This leak current may 10uA by through-current.
If can't permit this 10uA, the below power-up sequence chart is recommended.
When the power-source supply of V_{DD} is carried out earlier than V_{IO}, please start V_{IO} from a GND level not to become unstable. If can permit this 10uA, V_{DD} and V_{IO} and V_{BAT} input it by an independent timing and do not have any problem. However by this through-current, RTC does not got damage and the malfunction does not occur.

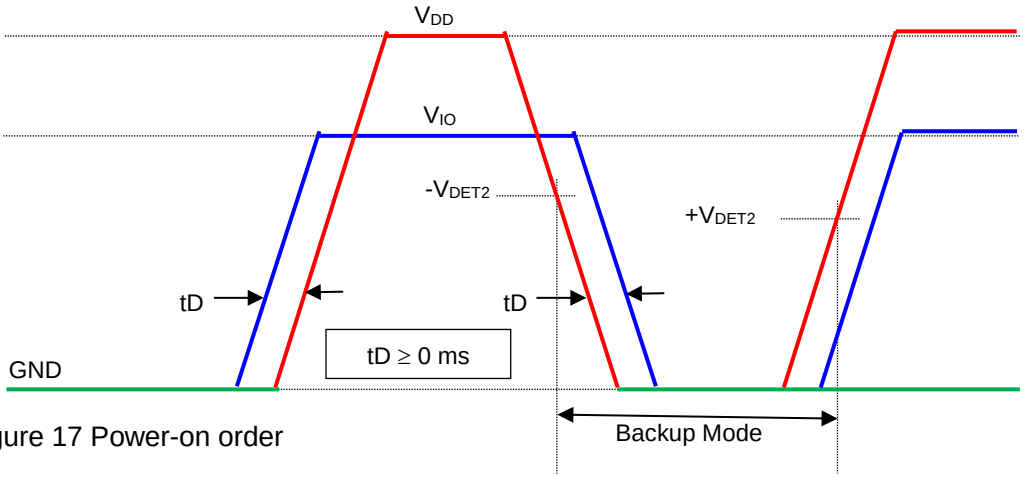

Figure 17 Power-on order

11. Reference Information

11.1. Reference Data

(1) Example of frequency and temperature characteristics

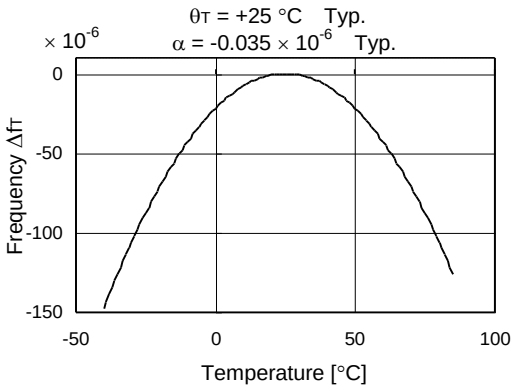

Clock accuracy calculation Excel is available->Download.

[Finding the frequency stability]

1. Frequency and temperature characteristics can be approximated using the following equations.

   $\Delta f_T = \alpha (\theta_T - \theta_X)^2$

   - Δf_T : Frequency deviation in any temperature
   - α [1 / °C^2] : Coefficient of secondary temperature (-0.035 ± 0.005) $\times 10^{-6}$ / °C^2
   - θ_T [°C] : Ultimate temperature (+25 ± 5 °C)
   - θ_X [°C] : Any temperature

2. To determine overall clock accuracy, add the frequency precision and voltage characteristics.

   $\Delta f/f = \Delta f/fo + \Delta f_T + \Delta fv$

   - $\Delta f/f$: Clock accuracy (stable frequency) in any temperature and voltage.
   - $\Delta f/fo$: Frequency precision
   - Δf_T : Frequency deviation in any temperature.
   - Δfv : Frequency deviation in any voltage.

3. How to find the date difference

   Date Difference = $\Delta f/f \times 86400$ s

   ∗ For example: $\Delta f/f = 11.574 \times 10^{-6}$ is an error of approximately 1 second / day.

Figure 18 Frequency temperature characteristics

12. Application Notes

1) Notes on handling

This module uses a C-MOS IC to realize low power consumption. Carefully note the following cautions when handling.

(1) Static electricity

While this module has built-in circuitry designed to protect it against electrostatic discharge, the chip could still be damaged by a large discharge of static electricity. Containers used for packing and transport should be constructed of conductive materials. In addition, only soldering irons, measurement circuits, and other such devices which do not leak high voltage should be used with this module, which should also be grounded when such devices are being used.

(2) Noise

If a signal with excessive external noise is applied to the power supply or input pins, the device may malfunction or "latch up." In order to ensure stable operation, connect a filter capacitor (preferably ceramic) of greater that 0.1 μF as close as possible to the power supply pins. Also, avoid placing any device that generates high level of electronic noise near this module.

(3) Voltage levels of input pins

When the voltage of out of the input voltage specifications range input into an input terminal constantly, a penetration electric current occurs. Thus, current consumption increases very much. This causes Latch-up, and there is the case that, as a result, a built-in IC is destroyed. Please use an input terminal according to input voltage specifications.
Furthermore, please input the V_{IO} or GND most recent voltage as much as possible.

(4) Handling of unused pins

Disposal of unused input terminals. When an input terminal is open state, it causes increase of a consumption electric current and the behavior that are instability. Please fix an unused input terminal to the voltage that is near to V_{IO} or GND.

2) Notes on packaging

(1) Soldering heat resistance.

If the temperature within the package exceeds +260 °C, the characteristics of the crystal oscillator will be degraded and it may be damaged. The reflow conditions within our reflow profile is recommended. Therefore, always check the mounting temperature and time before mounting this device. Also, check again if the mounting conditions are later changed.

(2) Mounting equipment

While this module can be used with general-purpose mounting equipment, the internal crystal oscillator may be damaged in some circumstances, depending on the equipment and conditions. Therefore, be sure to check this. In addition, if the mounting conditions are later changed, the same check should be performed again.

(3) Ultrasonic cleaning

Depending on the usage conditions, there is a possibility that the crystal oscillator will be damaged by resonance during ultrasonic cleaning. Since the conditions under which ultrasonic cleaning is carried out (the type of cleaner, power level, time, state of the inside of the cleaning vessel, etc.) vary widely, this device is not warranted against damage during ultrasonic cleaning.

(4) Mounting orientation

This device can be damaged if it is mounted in the wrong orientation. Always confirm the orientation of the device before mounting.

(5) Leakage between pins

Leakage between pins may occur if the power is turned on while the device has condensation or dirt on it. Make sure the device is dry and clean before supplying power to it.

(6) Installation of charged battery.

When a charged backup battery is installed by soldering, battery connection terminal of this device should connect to GND, beforehand.

13. Overview of Functions and Registers

Note:

The initialization of the register is necessary about the unused function.

13.1. Overview of Functions

1) Clock functions

This function is used to set and read out second, minute, hour, day, month, year (to the last two digits), and date data.
Any (two-digit) year that is a multiple of 4 is treated as a leap year and calculated automatically as such until the year 2099.
At the start of a I^2C communication, the time and clock counting stops (which causes loss of time), and clock starts automatically again at the end of the I^2C communication.

2) Wakeup Timer Interrupt function

The wakeup timer interrupt function generates an interrupt event periodically at any wakeup set between 244.14 μs and 65535 hours.
When an interrupt event is generated, the /IRQ pin goes to low level and "1" is set to the TF bit to report that an event has occurred.

3) Long-Timer function

It is able to use wakeup timer interrupt function as Long-Timer or usage counter.
This function measures the operation time on the main power supply and the operation time on the backup power supply and can automatically sum them up.

4) Alarm interrupt function

The alarm interrupt function generates interrupt events for alarm settings such as date, day, hour, and minute settings. When an interrupt event occurs, the AF bit value is set to "1" and the /IRQ pin goes to low level to indicate that an event has occurred.

5) Time Update Interrupt Function

The time update interrupt function generates interrupt in one-second or one-minute intervals which are synchronized to the update of the second or minute time register of the RTC When an interrupt event is generated, the /IRQ pin goes to low level and "1" is set to the UF bit to report that an event has occurred.

6) Frequency stop detection function

This flag bit indicates the retained status of clock operations or internal data. Its value changes from "0" to "1" when data loss might have occurred due to a low supply voltage.

7) Clock output function

A clock with the same frequency (32.768 kHz) as the built-in crystal resonator can be output from the FOUT pin. Output could also be 1 Hz, or 1024 Hz.

8) User RAM

RAM register is read/write accessible for any data.

9) Digital offset function

The clock precision can be increased by adding a time offset.

13.2. Register Table

13.2.1. Register Table

Table 12 Register Table

Address h	Function	bit 7	bit 6	bit 5	bit 4	bit 3	bit 2	bit 1	bit 0
10	SEC	**0**	40	20	10	8	4	2	1
11	MIN	**0**	40	20	10	8	4	2	1
12	HOUR	**0**	**0**	20	10	8	4	2	1
13	WEEK	**0**	6	5	4	3	2	1	0
14	DAY	**0**	**0**	20	10	8	4	2	1
15	MONTH	**0**	**0**	**0**	10	8	4	2	1
16	YEAR	80	40	20	10	8	4	2	1
17	MIN Alarm	AE	40	20	10	8	4	2	1
18	HOUR Alarm	AE	•	20	10	8	4	2	1
19	WEEK Alarm	AE	6	5	4	3	2	1	0
	DAY Alarm		•	20	10	8	4	2	1
1A	Timer Counter 0	128	64	32	16	8	4	2	1
1B	Timer Counter 1	32768	16384	8192	4096	2048	1024	512	256
1C	Extension Register	FSEL1	FSEL0	USEL	TE	WADA	TSEL2	TSEL1	TSEL0
1D	Flag Register	VBLF	**0**	UF	TF	AF	RSF	VLF	VBFF
1E	Control Register0	***TEST***	STOP	UIE	TIE	AIE	TSTP	TBKON	TBKE
1F	Control Register1	SMP TSEL1	SMP TSEL0	CHG EN	INIEN	**0**	RS VSEL	BF VSEL1	BF VSEL0

Address h	Function	bit 7	bit 6	bit 5	bit 4	bit 3	bit 2	bit 1	bit 0
20 | 23	RAM	User Register 32 bits (4-word x 8 bit)							

Address h	Function	bit 7	bit 6	bit 5	bit 4	bit 3	bit 2	bit 1	bit 0
30	Digital offset	DTE	L7	L6	L5	L4	L3	L2	L1
31	Extension Register1	-	-	-	-	-	-	-	VBLFE

After the initial power-up (from 0 V) or in case the VLF bit returns "1" , make sure to initialize all registers, before using the RTC.
Be sure to avoid entering incorrect date and time data, as clock operations are not guaranteed when the data or time data is incorrect.

The TEST bit is used by the manufacturer for testing. Be sure to set "0" for this bit when writing. ∗ Be sure to write "0" by initializing before using the clock module. Afterward, be sure to set "0" when writing
“0” means that writing is invalid and the read value is always 0.

Any bit marked with "•" is a RAM bit that can be used to read or write any data.
User Register is a free register which can be used as user RAM.
The above table shows only the user registers. Due to functional reasons, RTC has different registers not mentioned above table which are programmed by the manufactorer. Please make sure to only access above mentioned user registers.
“-“ bit is TEST bit. As initialization “0” should be set and be kept “0”.

13.2.2. Register initial value and Read/Write operation Table

After power-on-reset, registers bits of RTC are configured automatically as below.
The value will be the same even after Software Reset is executed.

【 **X**: Undefined in 0 or 1. usually it keeps data of before Power-On-Reset.】
【 **0**: Reset state 】
【 **1**: Set state 】

Table 13 Register initial value, Read/Write

Address h	Function	bit 7	bit 6	bit 5	bit 4	bit 3	bit 2	bit 1	bit 0
10	SEC	**0**	X	X	X	X	X	X	X
11	MIN	**0**	X	X	X	X	X	X	X
12	HOUR	**0**	**0**	X	X	X	X	X	X
13	WEEK	**0**	X	X	X	X	X	X	X
14	DAY	**0**	**0**	X	X	X	X	X	X
15	MONTH	**0**	**0**	**0**	X	X	X	X	X
16	YEAR	X	X	X	X	X	X	X	X
17	MIN Alarm	X	X	X	X	X	X	X	X
18	HOUR Alarm	X	X	X	X	X	X	X	X
19	WEEK Alarm	X	X	X	X	X	X	X	X
	DAY Alarm		X	X	X	X	X	X	X
1A	Timer Counter 0	X	X	X	X	X	X	X	X
1B	Timer Counter 1	X	X	X	X	X	X	X	X
1C	Extension Register	**0**	**0**	**0**	**0**	**0**	**1**	**0**	**0**
1D	Flag Register	**0**	**0**	**0**	**0**	**0**	**1**	**1**	**0**
1E	Control Register0	**0**	**0**	**0**	**0**	**0**	**0**	**0**	**0**
1F	Control Register1	**0**	**0**	**0**	**0**	**0**	**0**	**0**	**0**

Address h	Function	bit 7	bit 6	bit 5	bit 4	bit 3	bit 2	bit 1	bit 0
20-23	RAM	X	X	X	X	X	X	X	X

Address h	Function	bit 7	bit 6	bit 5	bit 4	bit 3	bit 2	bit 1	bit 0
30	Digital offset	**0**	**0**	**0**	**0**	**0**	**0**	**0**	**0**
31	Extension Register1	**0**	**0**	**0**	**0**	**0**	**0**	**0**	**0**

13.3. Description of registers

13.3.1. Clock and calendar registers (0h ~ 16h)

This is counter registers from a second to a year.
See *[14.1 Clock calendar explanation]* for details.

13.3.2. RAM registers (20h ~ 23h)

This RAM register is read/write accessible for any data in the range from 00 h to FF h.

13.3.3. Alarm registers (17h ~ 19h)

The alarm interrupt function is used, along with the AE, AF, and WADA bits, to set alarms for specified date, day, hour, and minute values. See *[14.3. Alarm Interrupt Function]* for the details.

13.3.4. Timer setting and Timer counter register for wakeup timer (1Ah ~ 1Eh)

This register is used to set the default (preset) value for the counter.
To use the wakeup timer interrupt function ,TE, TF, TIE, TSEL2,TSEL1, TSEL0,TBKON,TBKE bits are set and used. When the wakeup timer interrupt function is not being used, the wakeup timer control register can be used as a RAM register. In such cases, stop the wakeup timer function by writing "0" to the TE and TIE bits. See *[14.2. Wakeup Timer Interrupt Function]* for the details.

13.3.5. Function-related register 1 (1Ch ~ 1Eh)

1) FSEL1, FSEL0 bit
A combination of the FSEL1 and FSEL0 bits are used to select the frequency to be output.
The choice is possible by a combining FSEL-bits and CE/FOE-pin, select the frequency of clock output or inhibit the clock output. See *[14.6. FOUT Function]* for the details.

2) USEL , UF, UIE bit
This bit is used to specify either "second update" or "minute update" as the update generation timing of the time update interrupt function.
See *[14.4. Update interrupt function]* for the details.

3) TE, TF, TIE, TSEL2, TSEL1, TSEL0, TSTP,TBKON,TBKE bit
These bits are used to control operation of the wakeup timer interrupt function.

4) WADA, AF, AIE bit
These bits are used to control operation of the alarm interrupt function.

5) TEST bit
These bits are the manufacturer's test bit. Always leave this bit value as "0" ..

6) VLF bit

This flag bit indicates the retained status of clock operations or internal data. Its value changes from "0" to "1" when data loss occurs, such as due to a supply voltage drop.
See [*14.5. Frequency stop detection function]* for the details.

7) STOP bit

This bit is to stop a timekeeping operation. In the case of “STOP bit = 1":

1) All the update of timekeeping and the calendar operation stops.
With it, an update interrupt event does not occur at an alarm interrupt and the time.

2) The part of the wakeup timer interrupt function stops.
A count stops the source clock setting of the timer in case of "64 Hz, 1 Hz, 1 min, 1 hour".

3) Note 3: The effect of STOP bit to FOUT functions.
When STOP = "1", 32.768 kHz and 1024 Hz output is possible. But 1 Hz output is disabled.

4) Switchover function cannot work in order that the V_{DD} voltage drop detection stops even if a main power supply falls.

8) RSF bit

This flag bit holds the result of detecting the reset voltage.

13.3.6. Function-related register 2 (1Fh)

1) SMPTSEL1,SMPTSEL0 bit

Operation time setting of a voltage detector circuit for each power supply pin.
See *[15.1. Description of Battery Backup switchover function]* for the details.

2) CHGEN bit

Setting of backup battery charge control (ON/OFF).

3) INIEN bit

Setting of a power switchover function (ON/OFF).

4) RSVSEL bit

Setting of voltage detection level of a V_{DD} pin.

5) BFVSEL1,BFVSEL0 bit

Setting of the full charge detection voltage of a backup battery.

13.3.7. Digital offset register (30h)

1) DTE bit

Setting of a Digital offset function (ON/OFF).
See *[17. Digital offset function]* for the details.

2) L7 ~ L1 bit

Setting of a Digital offset value.

14. Functions

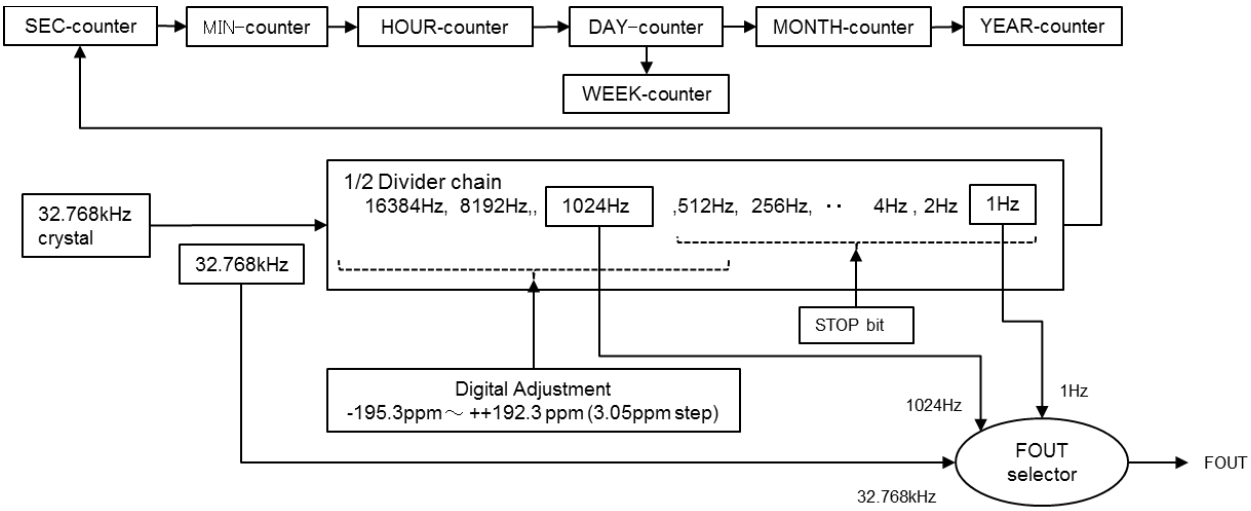

Figure 19 Basic (32.768 k Hz oscillation, counter, FOUT) Function

14.1. Clock calendar explanation

At the time of a communication start, the Clock & Calendar data are fixed (hold the carry operation), and it is automatically revised at the time of the communication end. Therefore, it recommends that the access to a clock calendar has continuous access by the auto increment function.

Table 14 Time, calendar setting example (Sun, 29-Feb-88 17:39:45 (leap year)

Address h	Function	bit 7	bit 6	bit 5	bit 4	bit 3	bit 2	bit 1	bit 0
10	SEC	0	1	0	0	0	1	0	1
11	MIN	0	0	1	1	1	0	0	1
12	HOUR	0	0	0	1	0	1	1	1
13	WEEK	0	0	0	0	0	0	0	1
14	DAY	0	0	1	0	1	0	0	1
15	MONTH	0	0	0	0	0	0	1	0
16	YEAR	1	0	0	0	1	0	0	0

∗ Note with caution that writing non-existent time data may interfere with normal operation of the clock counter.

14.1.1. Clock counter

1) [SEC] [MIN] register

These registers are 60-base BCD counters. These registers are incremented at the timing when carry is generated from a lower register. At the timing when the lower register changes from 59 to 00, carry is generated to the higher register and thus incremented.
When writing is performed to [SEC] register, Internal-count-down-chain less than one second (512 Hz ~ 1 Hz) is cleared to 0.

2) [HOUR] register

This register is a 24-base BCD counter (24-hour format).These registers are incremented at the timing when carry is generated from a lower register.

14.1.2. Week counter

The day (of the week) is indicated by 7 bits, bit 0 to bit 6.
The day data values are counted as: Day 01h → Day 02h → Day 04h → Day 08h → Day 10h → Day 20h → Day 40h → Day 01h → Day 02h, etc.
It is incremented when carry is generated from the HOUR register. This register does not generate carry to a higher register. Since this register is not connected with the YEAR, MONTH and DAY registers, it needs to be set again with the matching day of the week if any of the YEAR, MONTH or DAY registers have been changed.

Table 15 Setting example of the week register value.

Day	bit 7	bit 6	bit 5	bit 4	bit 3	bit 2	bit 1	bit 0	Data h
Sunday	0	0	0	0	0	0	0	**1**	01 h
Monday	0	0	0	0	0	0	**1**	0	02 h
Tuesday	0	0	0	0	0	**1**	0	0	04 h
Wednesday	0	0	0	0	**1**	0	0	0	08 h
Thursday	0	0	0	**1**	0	0	0	0	10 h
Friday	0	0	**1**	0	0	0	0	0	20 h
Saturday	0	**1**	0	0	0	0	0	0	40 h

∗ Do not set "1" to more than one day at the same time.

14.1.3. Calendar counter

1) [DAY], [MONTH] register

The DAY register is a variable (between 28-base and 31-base) BCD counter that is influenced by the month and the leap year. The MONTH register is a 12-base BCD counter triggered by carryover of the day register.

		Jan.	Feb.	Mar	Apr.	May	June	July	Aug.	Sep.	Oct.	Nov.	Dec.
Days	Common year	31	28	31	30	31	30	31	31	30	31	30	31
	Leap year		29										

[

2) YEAR] register

This register is a BCD counter for years 00 to 99.
The leap year is automatically determined and influences the DAY register.
This RTC processes following years as leap years: 00,04,08,12,,, 96.
User software correction is needed in the years 2100,2200,2300 as they are common years.

< Definition of leap years>

- Leap year : year divisible by 4 , year divisible by 400
  Ex. 2000,2004,2008,2012,,, 2096,2400,2800,,,
- Common year: year indivisible by 4, year divisible by 100
  Ex. 2001,2002,2003,2005,,, 2099,2100,2200,2300,2500,,

14.2. Wakeup Timer Interrupt Function

The wakeup timer interrupt function generates an interrupt event periodically at any wakeup set between 244.14 μs and 65535 hours. This function can stop at one time and is available as an accumulative timer. After the interrupt occurs, the /IRQ outputs is released in tRTN2 automatically

14.2.1. Related registers for function of wakeup timer interrupt function

Address h	Function	bit 7	bit 6	bit 5	bit 4	bit 3	bit 2	bit 1	bit 0
1A	Timer Counter 0	128	64	32	16	8	4	2	1
1B	Timer Counter 1	32768	16384	8192	4096	2048	1024	512	256
1C	Extension Register	FSEL1	FSEL0	USEL	**TE**	WADA	**TSEL2**	**TSEL1**	**TSEL0**
1D	Flag Register	VBLF	**0**	UF	**TF**	AF	RSF	VLF	VBFF
1E	Control Register0	***TEST***	STOP	UIE	**TIE**	AIE	**TSTP**	**TBKON**	**TBKE**

Before entering operation settings, we recommend first reset the TE bit to "0".
When the wakeup timer function is not being used, the wakeup Timer Counter0,1 register can be used as a RAM register. In such cases, stop the wakeup timer function by writing "0" to the TE and TIE bits.

1) Down counter for wakeup timer(Timer Counter 1, 0)
This register is used to set the default (preset) value for the counter. Any count value from 1(0001h) to 65535(FFFFh)can be set.
Be sure to write "0" to the TE bit before writing the preset value.

When TE=0, read out data of timer counter is default (Preset) value.

And when TE=1, read out data of timer counter is counting down value.

But when access to timer counter data, counting value is not held.

Therefore, for example, perform twice read access to obtain right data, and a way to adopt the case that two data accorded is recommended.

2) TSEL2, TSEL1, TESL0 bit
The combination of these three bits is used to set the countdown period (source clock) for this function.

Table 16 Countdown period (source clock) selection

TSEL2 (bit 2)	TSEL1 (bit 1)	TSEL0 (bit 0)	Source clock		Auto release time tRTN2 (Min.)
0	0	0	4096 Hz	/Once per 244.14 μs	122 μs
0	0	1	64 Hz	/Once per 15.625 ms	7.57 ms
0	1	0	1 Hz	/Once per second	7.57 ms
0	1	1	1/60 Hz	/Once per minute	7.57 ms
1	0	0	1/3600 Hz	/Once per hour	7.57 ms

The /IRQ pin's auto reset time (tRTN) varies as shown above according to the source clock setting.
The first countdown shortens than a source clock.

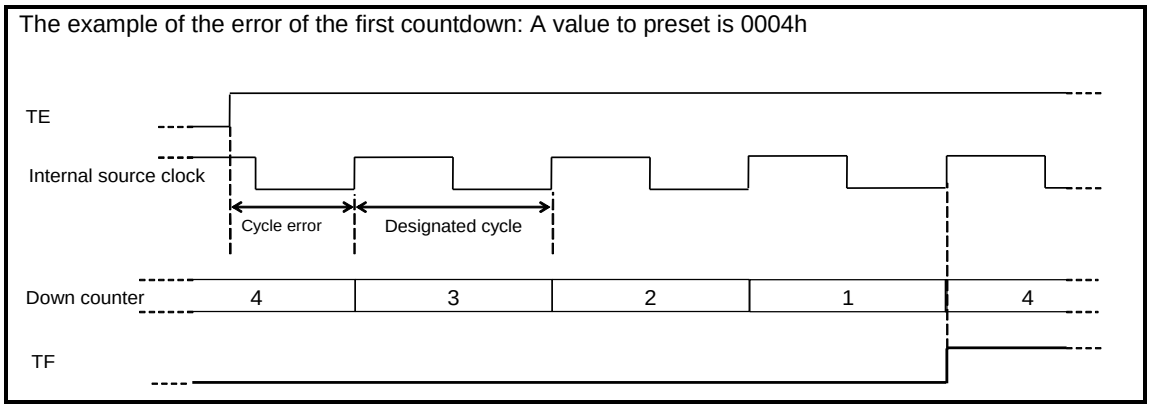

Figure 20 Wakeup timer initial sequence

When selected 4,096 Hz / 64 Hz / 1Hz as a source clock, one period of error occurs at the maximum.
When selected1/60 Hz / 1/3600 Hz as a source clock, 1 Hz of error occurs at the maximum.

Inside counter block diagram

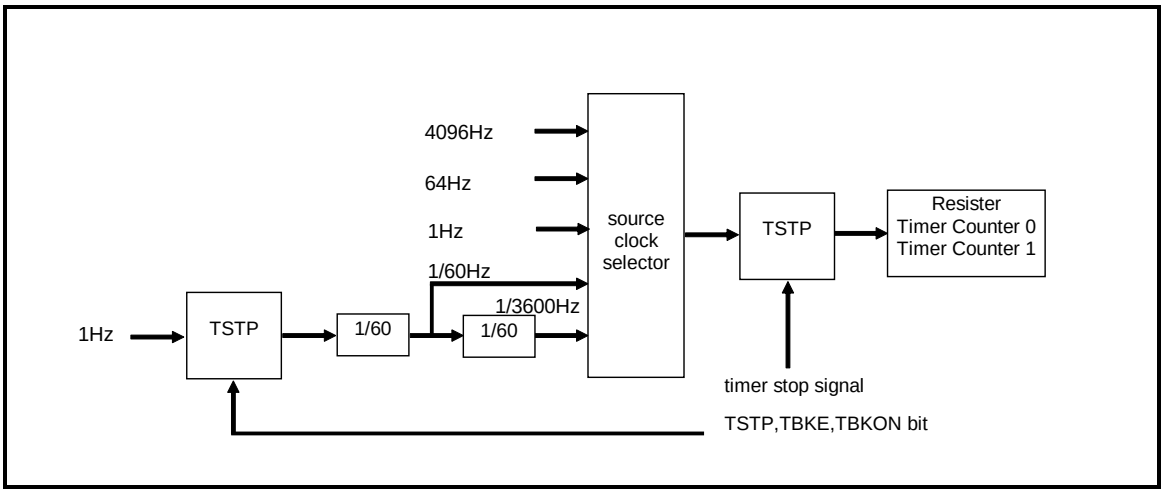

Figure 21 Wakeup timer block diagram

Note: The resolution of the count value depends on the source clock

3) TE bit (Timer Enable)

TE bit use for start Timer or stop.
When TE bit is "0", the preset value of the timer can be checked by reading this register.

Table 17 Wakeup timer control

TE	Data	Description
Write	0	The wakeup timer interrupt function is stopped. The wakeup timer interrupt output is released to Hi-Z immediately. Preset values are loaded on timer counters 0 and 1. New preset values can be set for timer counters 0 and 1.
	1	The wakeup timer interrupt function starts operating. When TE is set from 0 to 1, the timer counter starts counting down from the preset value.

4) TF bit (Timer Flag)

This is a flag bit that retains the result when a wakeup timer interrupt event is occurred.

Table 18 Wakeup timer interrupt detection flag

TF	Data	Description
Write	0	The /IRQ low output is released immediately.
	1	Invalid (writing a 1 will be ignored)
Read	0	Wakeup timer interrupt was not occurred.
	1	Wakeup timer interrupt was occurred. Result is retained until this bit is cleared to zero.

5) TIE bit (Timer Interrupt Enable)

This bit is used to control output of interrupt signals from the /IRQ pin when a wakeup timer interrupt event has occurred.

Table 19 Wakeup timer interrupt control

TIE	Data	Description
Write	0	1) Even if wakeup timer interrupt event occurs, an interrupt signal is not generated. 2) When a /IRQ was output Wakeup timer interruption already, the wakeup timer interrupt signal is released to Hi-Z from low.
	1	When a wakeup timer interrupt event occurs, an interrupt signal is generated (/IRQ status changes to low from Hi-z.

6) TBKON, TBKE bit

This function selects the operation time with the main power supply or the operation time with the backup power supply. The count value is added.

Table 20 Wakeup timer normal mode/backup mode control

operation	TBKE	TBKON	Description
Write	0	X	This setting counts normal mode and backup mode.
	1	0	This setting counts it at time of normal mode(V_{DD} operation)
		1	This setting counts it at time of backup mode (V_{BAT} operation)

7) TSTP bit (Timer Stop)

This bit is used to stop wakeup timer count down.

Table 21 Wakeup timer stop control

TE	STOP	TBKE	TSTP	Description
1	0	0	0	Countdown is restarted. The restart value of the countdown is a stopping value
			1	Count stops.
		1	X	Setting of TSTP value becomes invalid, and the count does not stop even if set it in TSTP=1.
	1	X	X	When source clock is 64 Hz,1 Hz,1/60 Hz, 1/3600 Hz, the countdown is stopped.
0	X	X	X	The preset value is loaded to timer counter1,2. Timer count down is stopped.

14.2.2. Wakeup timer start timing

Counting down of the wakeup timer value starts at the rising edge of the SCL (ACK output) signal that occurs when the TE value is changed from "0" to "1".

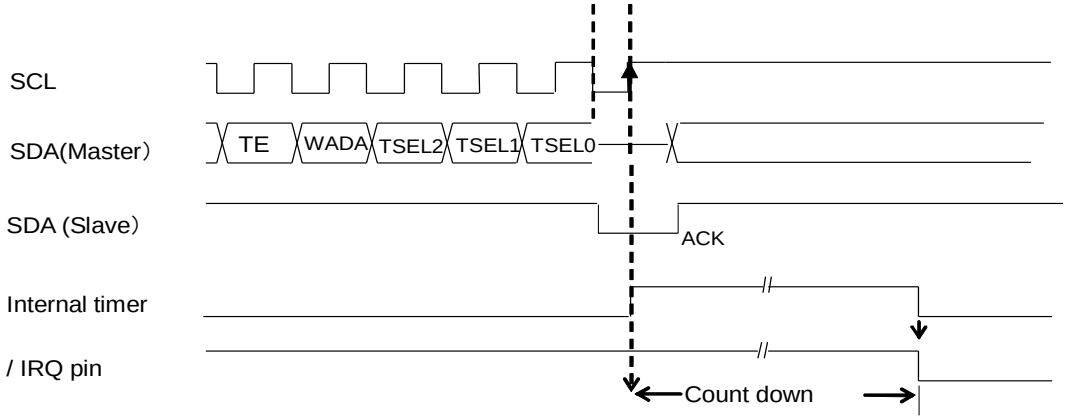

Figure 22 Wakeup timer start sequence

14.2.3. Wakeup timer interrupt interval (example)

The combination of the source clock settings and wakeup timer countdown setting sets interrupt interval, as shown in the following examples.

Table 22 Wakeup timer interrupt cycles

Timer Counter setting 1 ~ 65535	Source clock				
	4096 Hz TSEL2 = 0 TSEL1, 0 = 0, 0	64 Hz TSEL2 = 0 TSEL1, 0 = 0, 1	1 Hz TSEL2 = 0 TSEL1, 0 = 1, 0	1 / 60 Hz TSEL2 = 0 TSEL1, 0 = 1, 1	1 / 3600 Hz TSEL2 = 1 TSEL1, 0 = 0, 0
0	–	–	–	–	–
1	244.14 μs	15.625 ms	1 s	1 min	1 h
:	:	:	:	:	:
410	100.10 ms	6.406 s	410 s	410 min	410 h
:	:	:	:	:	:
3840	0.9375 s	60.000 s	3840 s	3840 min	3840 h
:	:	:	:	:	:
4096	1.0000 s	64.000 s	4096 s	4096 min	4096 h
:	:	:	:	:	:
65535	15.9998 s	1023.984 s	65535 s	65535 min	65535 h

14.2.4. Diagram of wakeup timer interrupt function

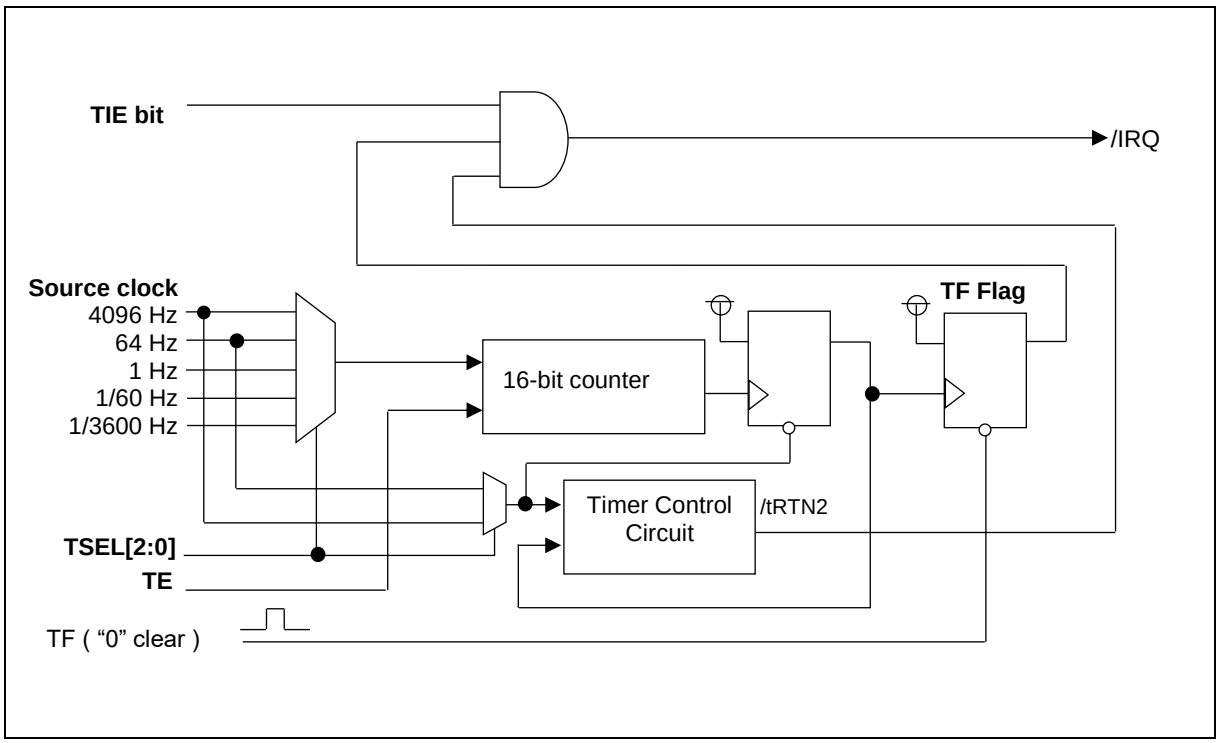

Figure 23 Wakeup timer inner block diagram

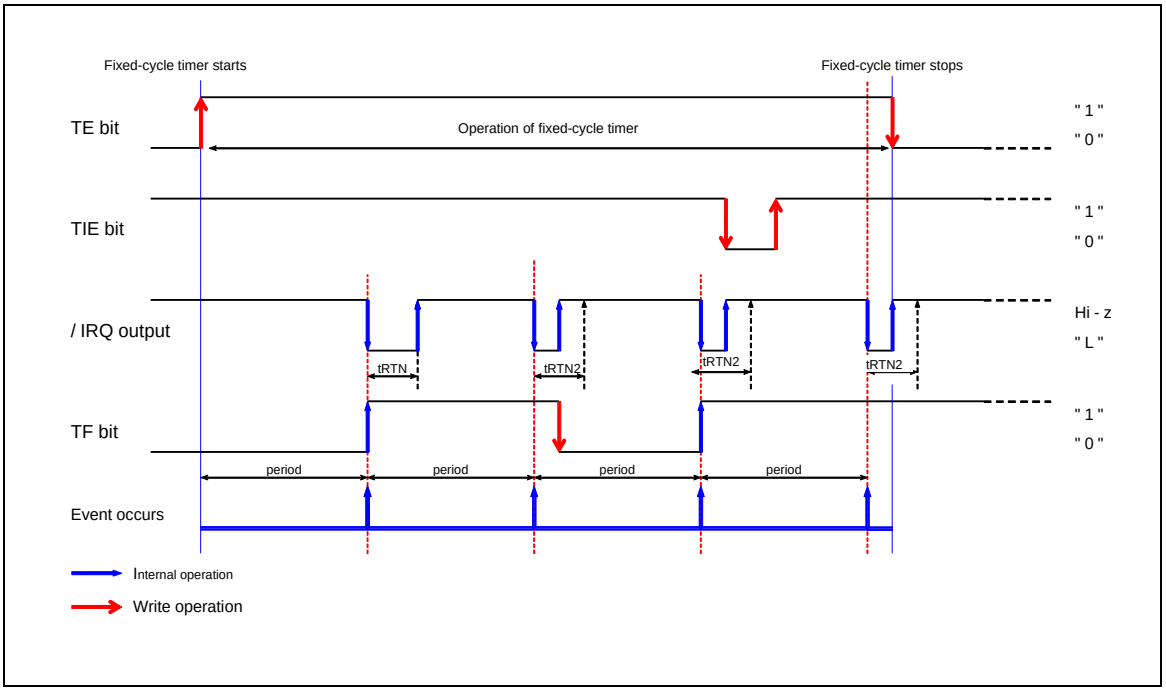

Figure 24 Wakeup timer timing chart

14.3. Alarm Interrupt Function

The alarm interrupt function generates interrupt events for alarm settings such as date, day, hour, and minute settings.
When an interrupt event occurs, the AF bit value is set to "1" and the /IRQ pin goes to low level to indicate that an event has occurred. AF bit and /IRQ output show a maximum delay of 1.46ms from the alarm event.

∗ /IRQ="L" output when occurs alarm interruption event is not cancelled automatically unless giving intentional cancellation and /IRQ="L" are maintained.

14.3.1. Related registers for Alarm interrupt functions.

Address h	Function	bit 7	bit 6	bit 5	bit 4	bit 3	bit 2	bit 1	bit 0
17	MIN Alarm	**AE**	40	20	10	8	4	2	1
18	HOUR Alarm	**AE**	•	20	10	8	4	2	1
19	WEEK Alarm	**AE**	6	5	4	3	2	1	0
	DAY Alarm		•	20	10	8	4	2	1
1C	Extension Register	FSEL1	FSEL0	USEL	TE	**WADA**	TSEL2	TSEL1	TSEL0
1D	Flag Register	VBLF	**0**	UF	TF	**AF**	RSF	VLF	VBFF
1E	Control Register0	***TEST***	STOP	UIE	TIE	**AIE**	TSTP	TBKON	TBKE

∗ Before entering settings for operations, we recommend writing a "0" to the AIE bit to prevent hardware interrupts from occurring inadvertently while entering settings.

∗ When the STOP bit value is "1" alarm interrupt events do not occur.

∗ When the alarm interrupt function is not being used, the Alarm registers (Reg – 17h to 19h) can be used as a RAM register. In such cases, be sure to write "0" to the AIE bit.

∗ When the AIE bit value is "1" and the Alarm registers (Reg – 17h to 19h) is being used as a RAM register, /IRQ may be changed to low level unintentionally.

1) AE bit

The minute, hour, day and date when an alarm interrupt event will occur is set using this register and the WADA bit.

In the WEEK alarm /Day alarm register (Reg – 19h), the setting selected via the WADA bit determines whether WEEK alarm data or DAY alarm data will be set. If WEEK has been selected via the WADA bit, multiple days can be set (such as Monday, Wednesday, Friday, Saturday).

When the settings made in the alarm registers and the WADA bit match the current time, the AF bit value is changed to "1". At that time, if the AIE bit value has already been set to "1", the /IRQ pin goes low.
Note: AE-bit is low active, so in order to enable 1 interrupt every hour once the actual minutes match the alarm setting, it is necessary to set the AE of register 17h to 0 and the AE of 18h and 19h to 1.
In order to generate an alarm interrupt only once a week, all 3 AE-bits have to be set "0

∗1) The alarm function is not a HW feature but software function inside the RTC.
*2) In case "AE" bit of register 19h is set to "1", the day will be ignored, and an interrupt occurs ones the actual time matches the minutes and/or hour setting of the alarm register.
(Example) Write 80h (AE = "1") to the WEEK Alarm /DAY Alarm register (Reg - 19h):
Only the hour and minute settings are used as alarm comparison targets. The week and date settings are not used as alarm comparison targets.
As a result, alarm occurs if only the hour and minute values match the alarm data.

∗3) If all three AE bit values are "1" the week/date and time settings are ignored, and an alarm interrupt event will occur once per minute.

2) WADA bit (Week Alarm / Day Alarm Select)

The alarm interrupt function uses either "Day" or "Week" as its target. The WADA bit is used to specify either WEEK or DAY as the target for alarm interrupt events.

Table 23 WEEK/DAY control

WADA	Data	Description
Write	0	Sets WEEK as target of alarm function
	1	Sets DAY as target of alarm function

3) AF bit (Alarm Flag)

When this flag bit value is already set to "0", occurrence of an alarm interrupt event changes it to "1".

When this flag bit value is "1", its value is retained until a "0" is written to it.

Table 24 Alarm Flag

AF	Data	Description
Write	0	Clearing this bit to zero enables /IRQ low output to be canceled (/IRQ remains Hi-z) when an alarm interrupt event has occurred.
	1	Invalid (writing a 1 will be ignored)!
Read	0	–
	1	Alarm interrupt events are detected. (Result is retained until this bit is cleared to zero.)

4) AIE bit (Alarm Interrupt Enable)

This bit is used to control output of interrupt signals from the /IRQ pin when an Alarm interrupt event has occurred.

Table 25 Alarm Interrupt control

AIE	Data	Description
Write	0	1) When an alarm interrupt event occurs, an interrupt signal is not generated or is canceled (/IRQ status remains Hi-z). 2) When an alarm interrupt event occurs, the interrupt signal is canceled (/IRQ status changes from low to Hi-z).
	1	When an alarm interrupt event occurs, an interrupt signal is generated (/IRQ status changes from Hi-z to low).

The AIE bit is only output control of the /IRQ terminal. It is necessary to clear an AF flag to cancel alarm.

14.3.2. Examples of alarm settings

1) Example of alarm settings when "Week" has been specified (and WADA bit = "0")

Table 26 WEEK alarm example

Week is specified WADA bit = "0"	Week Alarm								HOUR Alarm	MIN Alarm
	bit 7 AE	bit 6 S	bit 5 F	bit 4 T	bit 3 W	bit 2 T	bit 1 M	bit 0 S		
Monday through Friday, at 7:00 AM ∗ Minute value is ignored	0	0	1	1	1	1	1	0	07 h	AE bit = 1
Every Saturday and Sunday, for 30 minutes each hour ∗ Hour value is ignored	0	1	0	0	0	0	0	1	AE bit = 1	30 h
Every day, at 6:59 AM	0	1	1	1	1	1	1	1	18 h	59 h
	1	X	X	X	X	X	X	X		

X: Don't care

2) Example of alarm settings when "Day" has been specified (and WADA bit = "1")

Table 27 DAY alarm example

Day is specified WADA bit = "1"	Day Alarm								HOUR Alarm	IN Alarm
	bit 7 AE	bit 6 •	bit 5 20	bit 4 10	bit 3 08	bit 2 04	bit 1 02	bit 0 01		
First of each month, at 7:00 AM ∗ Minute value is ignored	0	0	0	0	0	0	0	1	07 h	AE bit = 1
15th of each month, for 30 minutes each hour ∗ Hour value is ignored	0	0	0	1	0	1	0	1	AE bit = 1	30 h
Every day, at 6:59 PM	1	X	X	X	X	X	X	X	18 h	59 h

X: Don't care

14.3.3. Diagram of alarm interrupt function

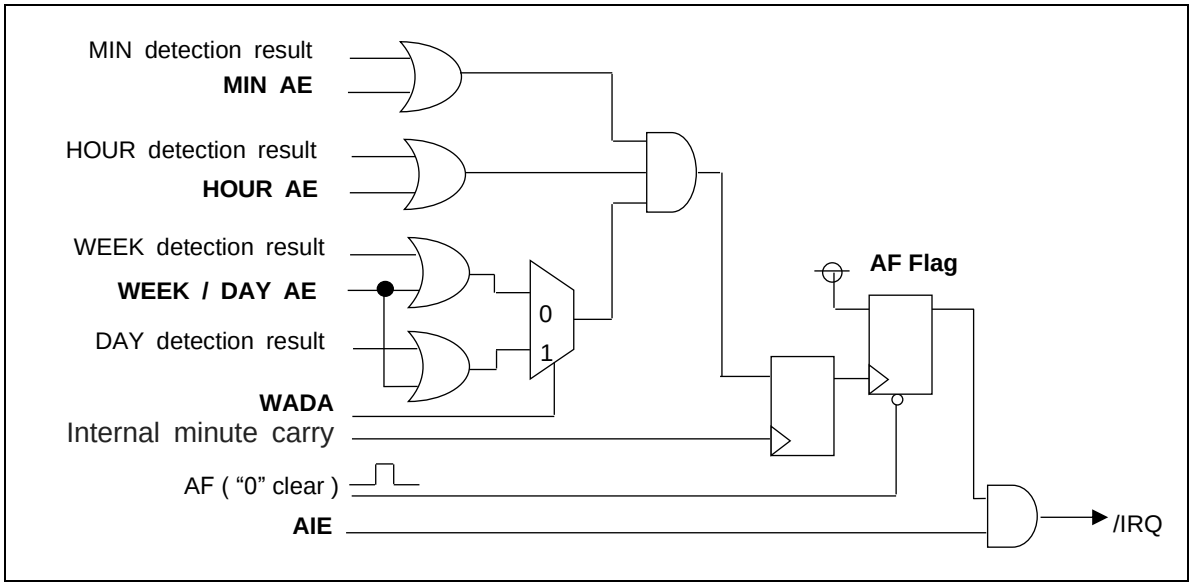

Figure 25 Alarm interrupt inner block diagram

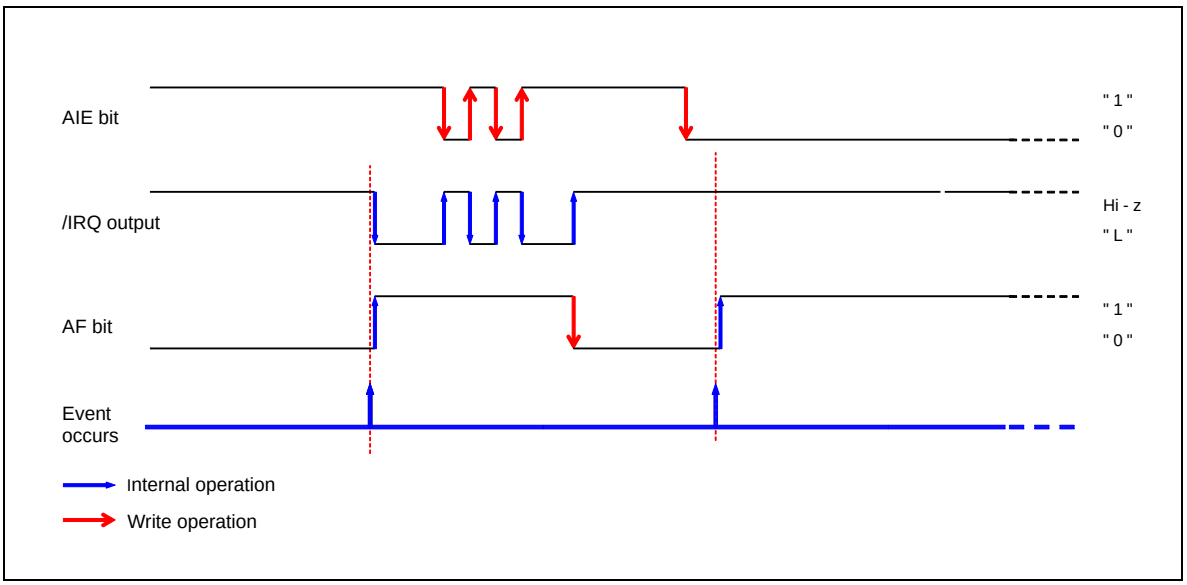

Figure 26 Alarm Interrupt time chart

14.4. Time Update Interrupt Function

The time update interrupt function generates interrupt in one-second or one-minute intervals which are synchronized to the update of the second or minute time register of the RTC When an interrupt event is generated, This /IRQ status is automatically cleared (/IRQ status changes from low level to Hi-z earliest 7.57ms (maximum 15.63ms) after the interrupt occurs). This time width is auto release time (tRTN1).

14.4.1. Related registers for time update interrupt functions.

Address h	Function	bit 7	bit 6	bit 5	bit 4	bit 3	bit 2	bit 1	bit 0
1C	Extension Register	FSEL1	FSEL0	**USEL**	TE	WADA	TSEL2	TSEL1	TSEL0
1D	Flag Register	VBLF	**0**	**UF**	TF	AF	RSF	VLF	VBFF
1E	Control Register0	***TEST***	STOP	**UIE**	TIE	AIE	TSTP	TBKON	TBKE

∗ Before entering settings for operations, we recommend writing a "0" to the UIE bit to prevent hardware interrupts from occurring inadvertently while entering settings.
∗ When the STOP bit value is "1" time update interrupt events do not occur.
∗ Although the time update interrupt function cannot be fully stopped, if "0" is written to the UIE bit, the time update interrupt function can be prevented from changing the /IRQ pin status to low.

1) USEL bit (Update Interrupt Select)

This bit is used to select "second" update or "minute" update as the timing for generation of time update interrupt events.

Table 28 Second/Minute selection

USEL	Data	Description
Write	0	Selects "second update" (once per second) as the timing for generation of interrupt events
	1	Selects "minute update" (once per minute) as the timing for generation of interrupt events

2) UF bit (Update Flag) This flag bit value changes from "0" to "1" when a time update interrupt event occurs.

Table 29 Time update Flag

UF	Data	Description
Write	0	Clear this bit to zero enables /IRQ low output of time update to be canceled immediately when a time update interrupt event has occurred.
	1	Invalid (writing a 1 will be ignored
Read	0	–
	1	Time update interrupt events are detected. (The result is retained until this bit is cleared to zero.)

3) UIE bit (Update Interrupt Enable)

This bit selects whether to generate an interrupt signal or to not generate it.

Table 30 Time update interrupt control

UIE	Data	Description
Write / Read	0	1) Does not generate an interrupt signal when a time update interrupt event occurs. 2) Cancels interrupt signal triggered by time update interrupt event. □□ Even when the UIE bit value is "0" another interrupt event may change the /IRQ status to low (or may hold /IRQ =□"L").
	1	When a time update interrupt event occurs, an interrupt signal is generated (/IRQ status changes from Hi-Z to low). ∗ When a time update interrupt event occurs, low-level output from the /IRQ pin occurs only when the UIE bit value is "1". Earliest 7.57 ms after the interrupt occurs, the /IRQ status is automatically cleared (/IRQ status changes from low to Hi-Z).

14.4.2. Time update interrupt function diagram

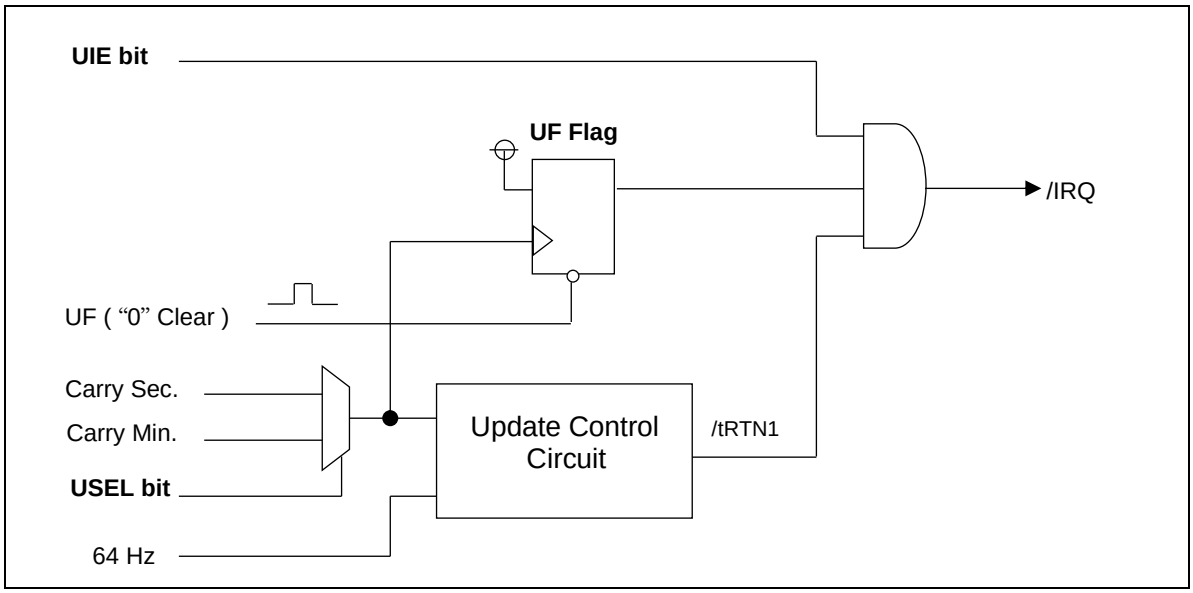

Figure 27 Time update inner block diagram

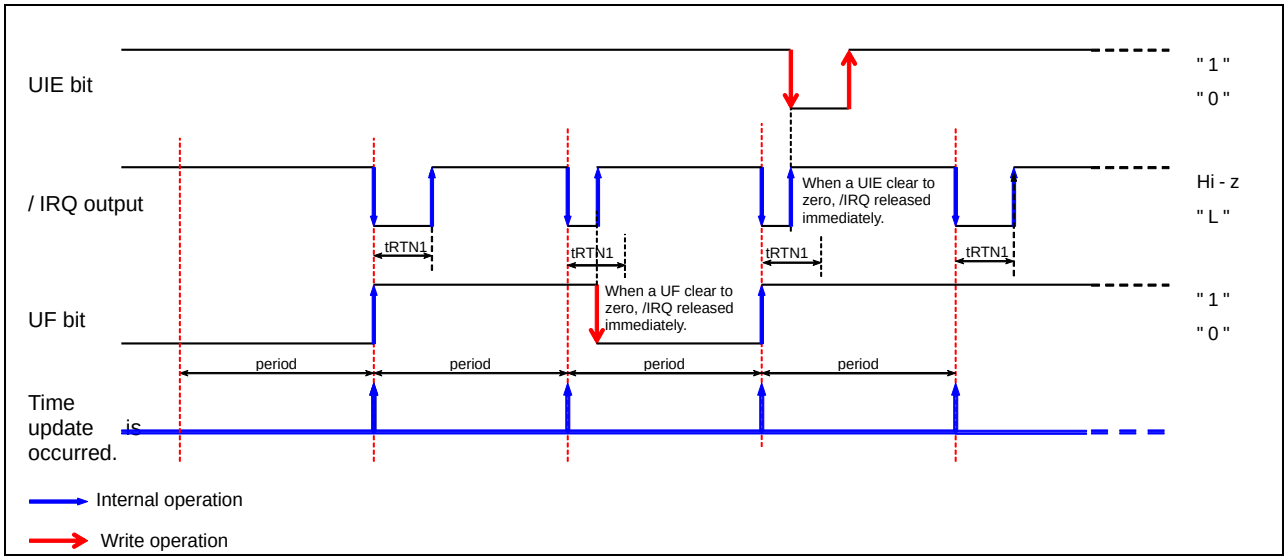

Figure 28 Time update time chart

14.5. Oscillation stop detection function

This flag bit indicates the retained status of clock oscillation stop. Its value changes from "0" to "1" when data loss might have occurred due to clock oscillation stop, power on resetting. Once this flag bit's value is "1", its value is retained until a "0" is written to it.
During the initial power-on (from 0 V) and/or if the value of the VLF bit is "1", be sure to initialize all registers before using them.

14.5.1. Related registers for Oscillation stop and Voltage low detect function.

Address h	Function	bit 7	bit 6	bit 5	bit 4	bit 3	bit 2	bit 1	bit 0
1D	Flag Register	VBLF	**0**	UF	TF	AF	RSF	**VLF**	VBFF

1) VLF bit

Table 31 Oscillation stop detection flag

VLF	Data	Description
Write	0	The VLF is cleared to 0 and waiting for next low voltage detection.
	1	Invalid (writing 1 will be ignored)
Read	0	Oscillation status is normal, RTC register data are valid.
	1	Oscillation stop is detected, RTC register data are invalid. Should be initialized of all register data. VLF is maintained till it is cleared by zero.

14.6. FOUT function

The clock signal can be output via the FOUT pin. Output is stopped upon detection of the voltage drop below V_{DET1}In this case pin output becomes Hi-z.

14.6.1. FOUT control register.

Address h	Function	bit 7	bit 6	bit 5	bit 4	bit 3	bit 2	bit 1	bit 0
1C	Extension Register	**FSEL1**	**FSEL0**	USEL	TE	WADA	TSEL2	TSEL1	TSEL0

14.6.2. FOUT function Table.

3) FSEL1,FSEL0 bit

Table 32 FOUT Frequency selection

FSEL1	FSEL0	output
0	0	32.768 kHz Output
0	1	1024 Hz Output
1	0	1 Hz Output
1	1	OFF

At the time of the initial power-on, “0” is set to FSEL1, FSEL0 by Power-On-Reset..

Note: The effect of STOP bit to FOUT functions.
When STOP = "1", 32.768 kHz and 1024 Hz output is possible.
But 1 Hz output is disabled.

15. Battery backup switchover function

15.1. Description of Battery backup switchover function

This function consists of a supply voltage detector "V_{DET}" which detects if the supply voltage of the main power source connected to "V_{DD}" drops below a threshold ($V_{DET}2$), and three MOS switches (SW1,SW2A and SW2B) located between the main power-source pin "V_{DD}" and the backup power supply pin "V_{BAT}". (Figure 26 Battery backup switchover block diagram)
The MOS-switches SW1, SW2A and SW2B are activated according to the result of the supply-voltage detection of V_{DET2} and the RTC changes the operating modes between normal mode (RTC power supply = V_{DD}) or backup mode (RTC power supply = V_{BAT}).
The RTCs backup function is built in a way to prevent reverse current flow from V_{BAT} to V_{DD}. While in backup-mode, the I2C-bus and FOUT function are switched off and related terminals switched to Hi-Z.
The figure below shows the switch status after power-on reset in the image of the power switching circuit.

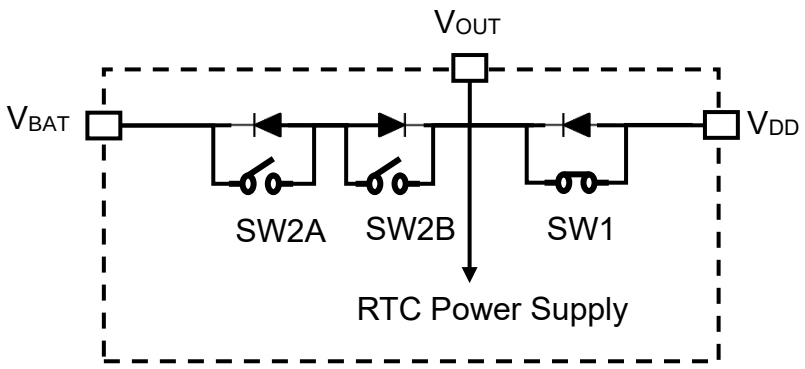

Figure 29 Battery backup switchover block diagram

15.1.1 Default power switch state

The figure above shows the state of the power switch after power-on reset.
SW1: Always ON
SW2A: Always OFF
SW2B: Always OFF
VDET2 voltage monitoring: Always OFF, power supply is not switched, power source is only VDD power supply.

15.2. Reference characteristics of switching elements.

Table 33 Reference characteristics of switching elements.

Item	Value	Condition
Limit of current.	40 mA Max.	SW1 = SW2A = SW2B = ON, +25 °C
Diode Vf Vf / Sink Current	0.40 V / 1μA Typ. 0.70 V / 1 mA Typ. 0.9 V / 10 mA Typ.	+25 °C
Diode IR	5 nA Max.	VR = 5.5 V, -40 °C ~ +85 °C

When using a secondary battery, EDLC, Please keep charge current 40 mA or less.

15.3. Reference characteristics of the charge current

Graph show an electric current characteristic (Resistance characteristics of all ON of SW1, SW2B, SW2A,) that can charge a second battery.
It is reference value in 25°C.
When V_{DD} voltage is high, The charge current increase.
And when little voltage differences of V_{DD} and V_{BAT}, charge current is decreasing.
A vertical axis shows charge current Ichg and a horizontal axis shows voltage difference Vdef between V_{DD} and V_{BAT}.

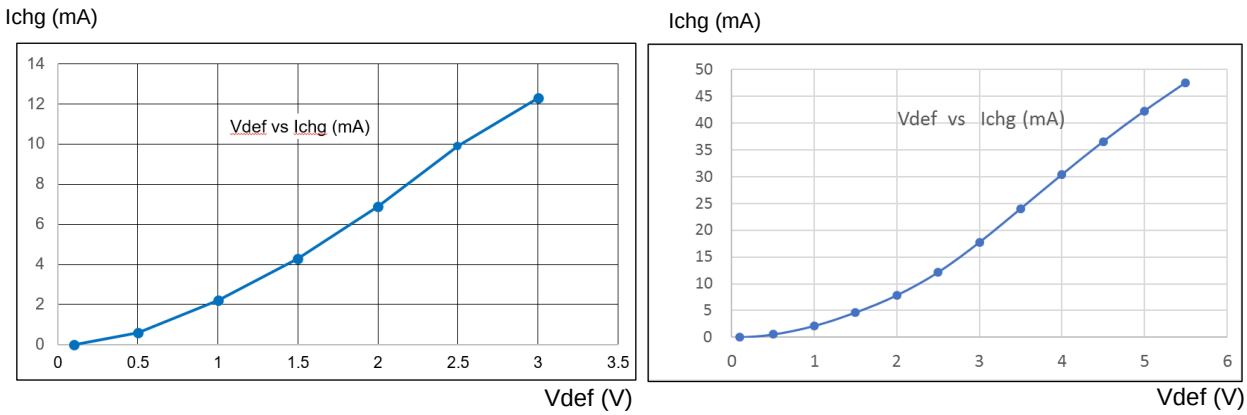

Figure 30 V_{BAT} charge current characteristics V_{DD} = 3.0 V, 5.5 V

15.4. Re-Chargeable battery Voltage Current features

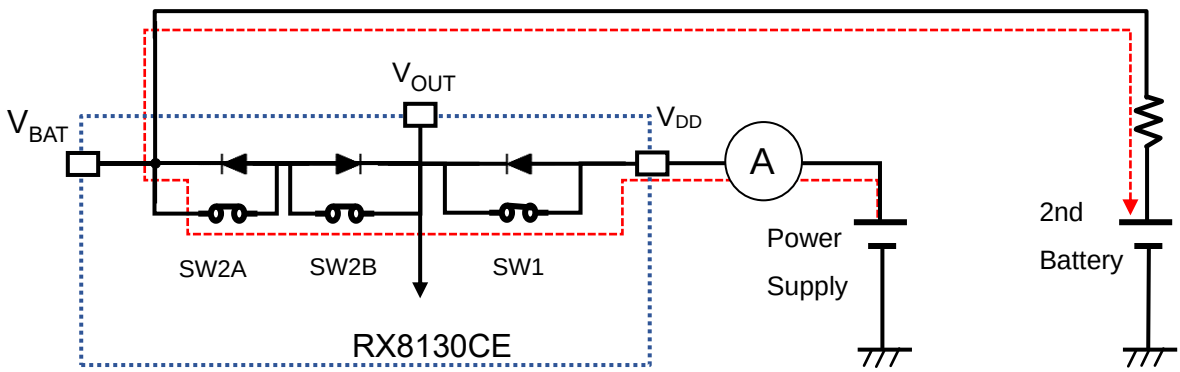

Figure 31 Re-chargeable battery connection

Battery life calculation Excel is available.->Download.

15.5. Related register of Battery backup switchover function

Address h	Function	bit 7	bit 6	bit 5	bit 4	bit 3	bit 2	bit 1	bit 0
1D	Flag Register	**VBLF**	**0**	UF	TF	AF	RSF	VLF	**VBFF**
1F	Control Register1	**SMP TSEL1**	**SMP TSEL0**	**CHG EN**	**INIEN**	**0**	**RS VSEL**	**BF VSEL1**	**BF VSEL0**

1) CHGEN bit

This bit has to be set to allow charging of a Re-chargeable battery connected to V_{BAT} from V_{DD} pin.

Table 34 CHGEN bit

CHGEN	Data	Description
Write / Read	0	For non-re-chargeable battery use (default setting). During V_{DD} drive SW2 is OFF, battery charging is not available.
	1	SW1, SW2 automatic controlled. For re-chargeable battery use

In case of re-chargeable battery use, INIEN should be set to 1 to enable SW1, SW2 automatic control.

To stop battery charging CHGEN should be reset to 0.

2) INIEN bit

Table 35 INIEN bit

INIEN	Data	Description
Write / Read	0	I2C and FOUT operate even if the VDD terminal voltage is VDET1 or less. (Default) Make sure that the I2C interface does not reach an intermediate potential. The power switching function is not operating in the 0 state due to power-on reset. If this bit is set to 1 even once, the power switching function will start operating. After that, the power switching function continues to operate even if this bit is cleared to zero.
	1	I^2C, FOUT function is not available while $V_{DD} < V_{DET}1$. I^2C, FOUT function is available while $V_{DD} > V_{DET}1$. CHGEN bit function is enabled.

Note 1

When used with power-on reset INIEN = 0, power switching is stopped and the power source is fixed to VDD-pin.

Therefore, it is recommended to set "INIEN = 1" at least once.

When the INIEN bit is set to 1, the power switching circuit is initialized and stabilized in the optimum state.

See "Initialization example".

Note 2

Setting INIEN from 0 to 1 with VDD <VDET1 disables I2C and FOUT outputs immediately.

Therefore, I2C cannot clear INIEN to 0 while VDD <VDET1.

In such cases, leave the INIEN bit at 0 from power on reset..

However, the power source is fixed to VDD-pin because the power switching function is stopped.

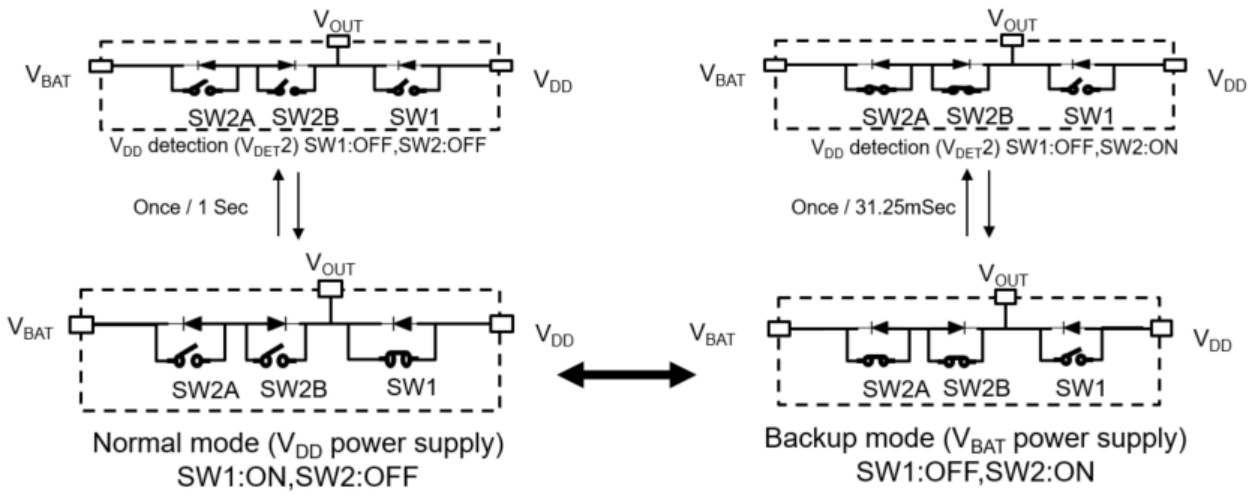

Figure 32 Non Re-chargeable battery SW1, SW2 control (INIEN = 1, CHGEN = 0)

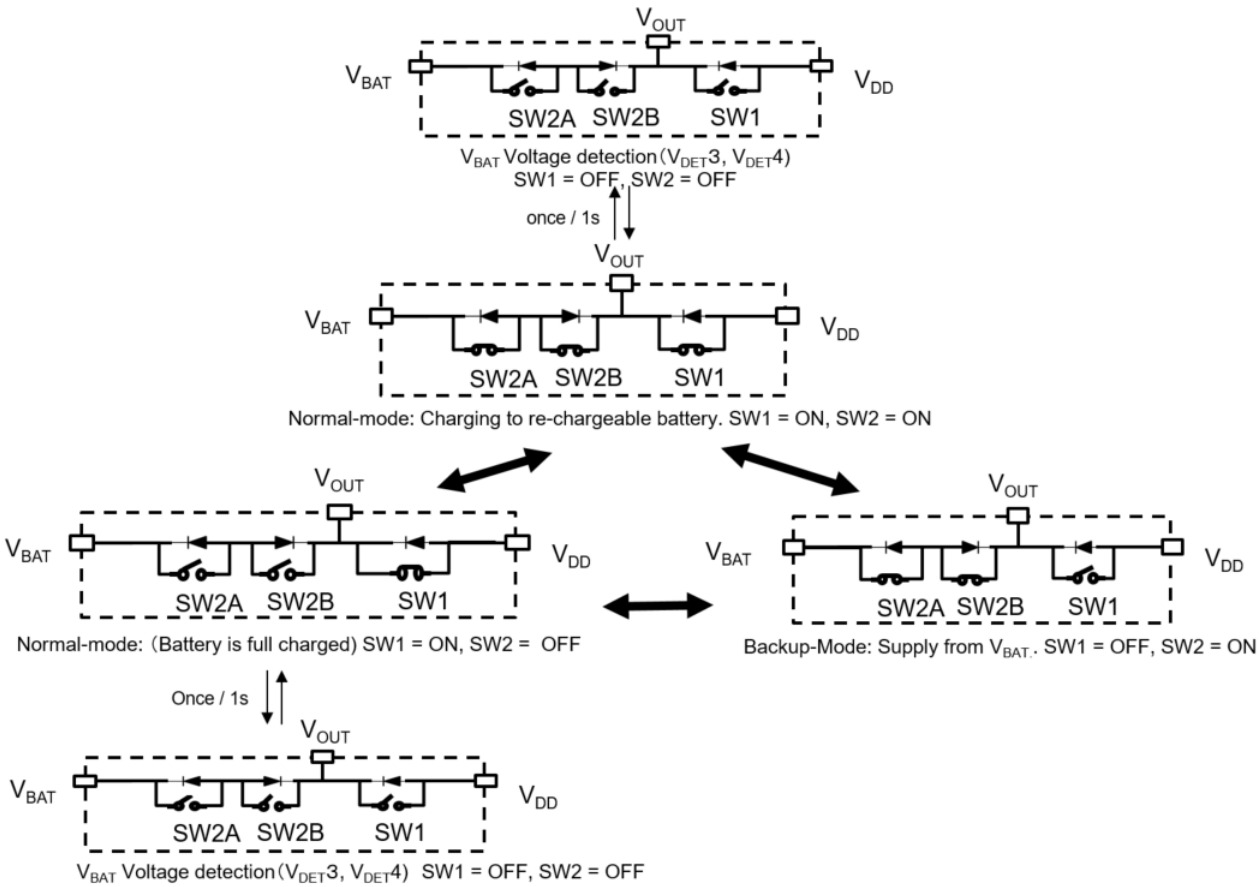

Figure 34 Re-chargeable battery SW1, SW2 control (INIEN = 1, CHGEN = 1)

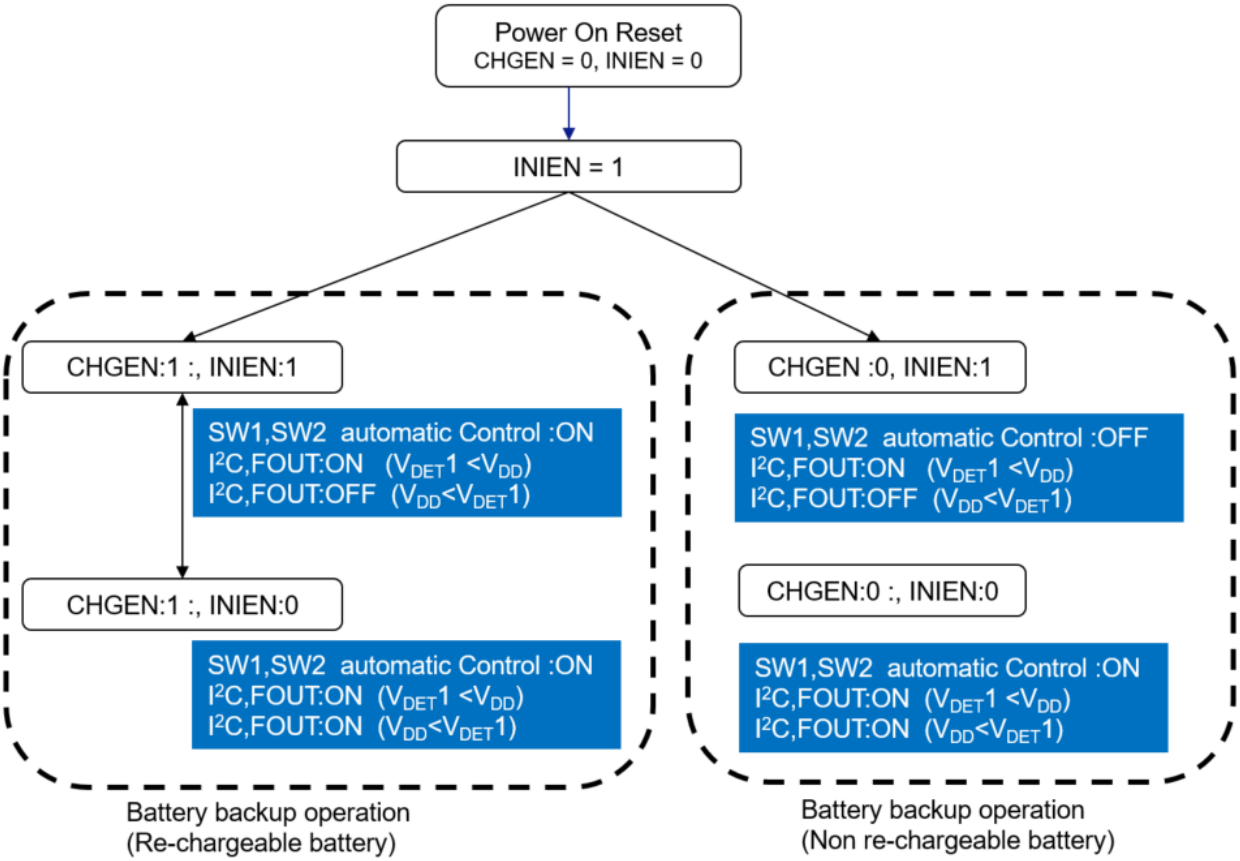

Figure 35 Battery backup (SW1, SW2 automatic control)

3) SMPTSEL1, SMPTSEL0 bit

- V_{DD} voltage detection: $V_{DET}1$ (reset), $V_{DET}2$ (voltage down):
  Battery backup detection ($V_{DET}2$) is done constantly and SW1 is opened periodically for V_{DD} measurement.
  During SW1:ON, external voltage to V_{DD} cannot be measured precisely because RTC internal voltage is leaked to V_{DD} external voltage supply circuit even external circuit is down. So periodical SW1 = OFF makes disconnection between RTC internal voltage and external voltage supply, thus V_{DD} external voltage is measured precisely. V_{DD} external voltage drop moves to backup mode.
  See *Figure 30 V_{DD} detection ($V_{DET}2$) timing.*

- V_{BAT} voltage detection: $V_{DET}3$ (V_{BAT} full charge), $V_{DET}4$(V_{BAT} over discharge)
  In case of normal mode, V_{BAT} voltage is precisely and periodically detected with condition (SW1 OFF, SW2 OFF). The detection period is determined by combination of SMPTSEL1, SMPTSEL0.
  See *Figure 31 for VDET3, $V_{DET}4$ voltage detection timing)*

  (In case of CHGEN = 0, There is no charge operation SW2 = OFF)

Table 36 Voltage detection timing

Power supply mode	Normal mode (Backup battery is charging)	Normal mode (Backup battery is fully charged)	Normal mode (After return from backup VDET1>VDD>VDET2)	Backup mode
Reset detection V_{DD} < V_{DET1}	Constantly ON	Constantly ON	Constantly ON	Constantly OFF
Power switching detection V_{DD} < V_{DET2}	Constantly ON	Constantly ON	Constantly ON	Once/31.25 ms
Full charge detection V_{BAT} > V_{DET3}	Once/1.0 s	Once/1.0 s	Once/1.0 s	Constantly OFF
Low-V_{BAT} detection V_{DD} < V_{DET4}	Once/1.0 s	Once/1.0 s	Once/1.0 s	Constantly OFF

* In normal mode, when operating the RTC on VDD-supply, SW1 has to be opened (Off) to perform the V_{DD} voltage detection for below mentioned times

Table 37 VDET3, VDET4 intermittent detection period

Power supply operation mode	SMPTSEL1,0	V_{DD} operation (Backup battery is charging)	V_{DD} operation (Backup battery is fully charged)	V_{DD} operation (After return from backup V_{DET1}>V_{DD}>V_{DET2})
SW1 Off time. *	00b (default)	2 ms	2 ms	2 ms
	01b	16 ms	16 ms	2 ms
	10b	128 ms	128 ms	2 ms
	11b	256 ms	256 ms	2 ms

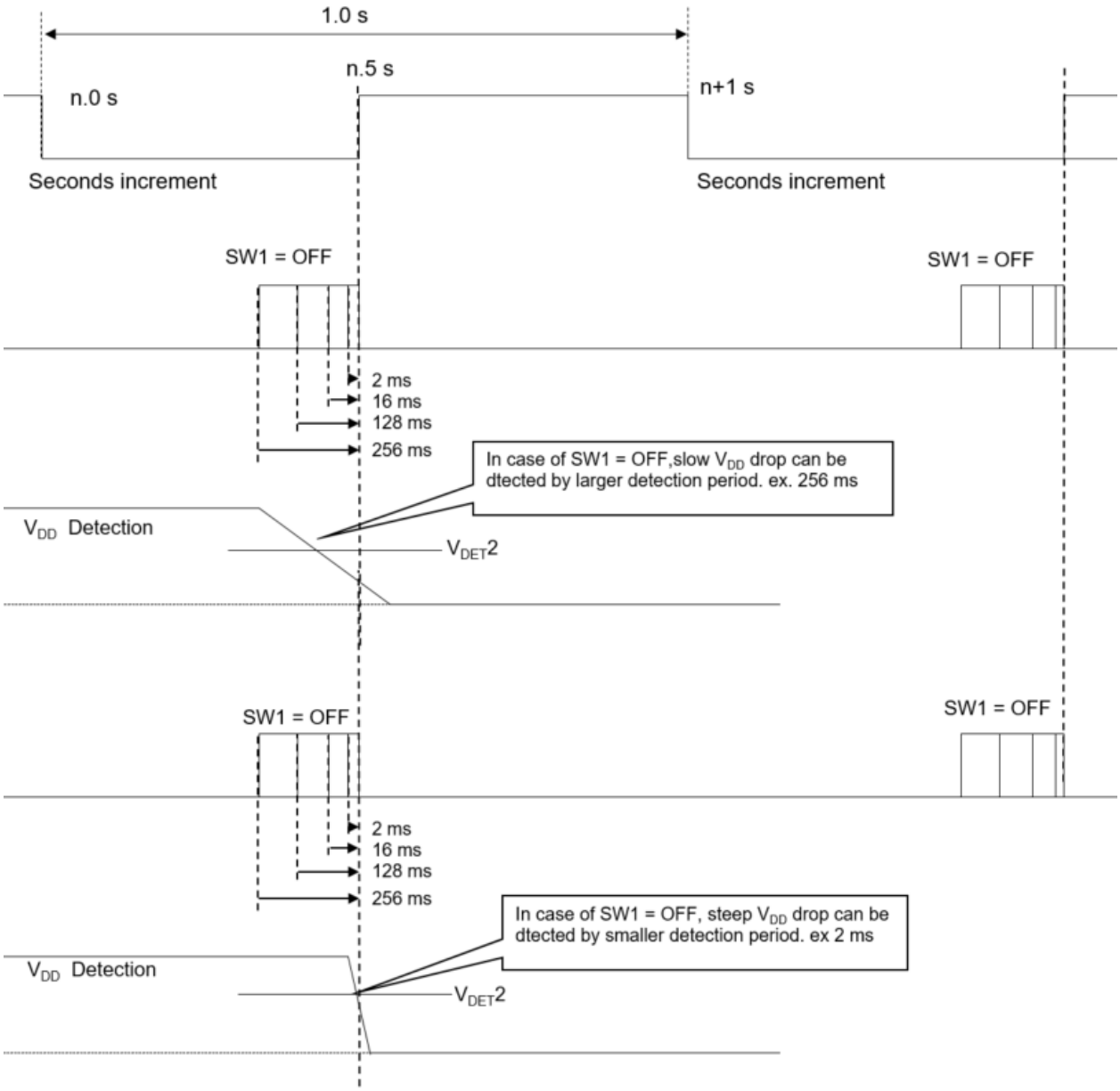

Figure 36 V_{DD} detection (VDET2) timing

V_{DD} voltage drop detection ($V_{DET}2$) is work always, in Normal mode.
Shorter SW1:OFF times are suitable to detect fast external voltage drops on V_{DD}. On the other hand, in order to detect a slower external voltage drop on V_{DD}, a longer SW1:OFF detection time is needed. But longer SW1:OFF period increases the current consumption.
Users are requested to evaluate SW1:OFF period based on actual system configuration and characteristics.

In backup mode V_{DD} detection ($V_{DET}2$) is activated once every 31.25 ms.

Note: Re-chargeable battery is charged through diode during1 the term of SW1 = OFF. Longer this term (ex. 256 ms) makes decreasing battery charging efficiency.

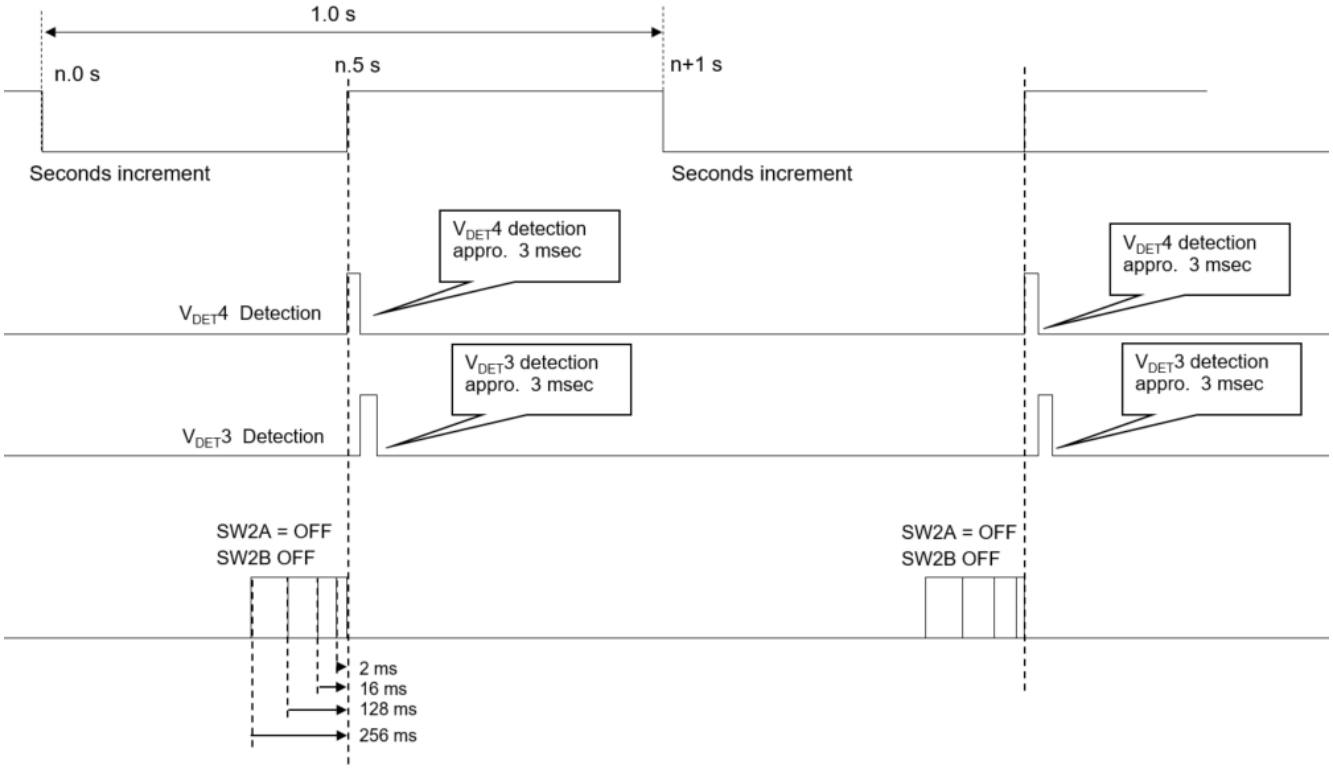

Figure 37 VDET3, VDET4 voltage detection timing) BFVSEL1, BFVSEL0 bit

15.6. Detection voltage setting

Table 38 VDET1,VDET2,VDET3,VDET4 setting

	Item	Symbol	Detect voltage Typ.	setting
V_{DET1}	Reset /Reset-release voltage	$+V_{DET11}$ / $-V_{DET11}$	2.8V / 2.75V	RSVSEL = 0 (default)
		$+V_{DET12}$ / $-V_{DET12}$	2.7V / 2.65V	RSVSEL = 1
V_{DET2}	Backup switchover/recover voltage	$+V_{DET2}$ / $-V_{DET2}$	1.35V / 1.30V	
V_{DET3}	Full charge detection voltage	$+V_{DET31}$ / $-V_{DET31}$	3.02V / 2.97V	BFVSEL = 00b default)
		$+V_{DET30}$ / $-V_{DET30}$	2.92V / 2.87V	BFVSEL = 01b
		$+V_{DET32}$ / $-V_{DET32}$	3.08V / 3.03V	BFVSEL = 10b
V_{DET4}	V_{BAT} low-voltage detection voltage	$-V_{DET4}$	2.4V	

4) The full-charge detection (V_{DET3}) and low-V_{BAT} detection (V_{DET4}) control SW2.

Table 39 BFVSEL1, BFVSEL0

BFVSEL1	BFVSEL0	Description
0	0	3.02 V (default)
0	1	3.08 V
1	0	2.92 V
1	1	OFF (Charging without limit)

5) VBFF bit
This bit indicates if the battery if fully charged (update Every 1sec)

Table 40 VBFF

VBFF	Data	Description
Read	0	Charging
	1	Full charge of V_{BAT} detected (voltage level defined by BFVSEL-bit is reached)

This flag shows the V_{BAT} charge state.

6) VBLF bit
Low V_{BAT} detection

Table 41 VBLF

VBLF	Data	Description
Write	0	Cleared to zero to prepare for the next status detection.
	1	Invalid (writing a 1 will be ignored)
Read	0	–
	1	Low-V_{BAT} has been detected ($V_{DET}4$)

7) VBLFE bit

Re-chargeable battery full charge detection (Every 1 s)

Table 42 VBLFE

VBLFE	Data	Description
Write	0	CHGEN:0 VBLF detection not available CHGEN:1 VBLF detection available (during normal mode re-chargeable battery charging)
	1	During V_{DD} supply VBLF detection available

To use VBLF detection, it must be set up "INIEN=1" before the setting once at least, and VBLFE bit setting.
During normal mode (V_{DD} drive) V_{BAT} low voltage (Non-rechargeable, rechargeable battery) can be detected. In case of backup mode VBLF function is not available, VBLF is detected after returning to normal mode.

9): STOP bit function

When STOP=1, in backup-mode, 31.25ms period of $V_{DET}2$ detection stops.
As a result, power supply switching becomes insufficient, and there is the possibility that a leak current occurs.
When STOP=1 and shift to backup-mode, clear the STOP bit to 0 after V_{DD}-ON immediately.

15.7. Power supply control

By setting battery backup registers (INIEN, CHGEN), the RX8130CE operates like following either in re-chargeable battery or non-re-chargeable battery operation.

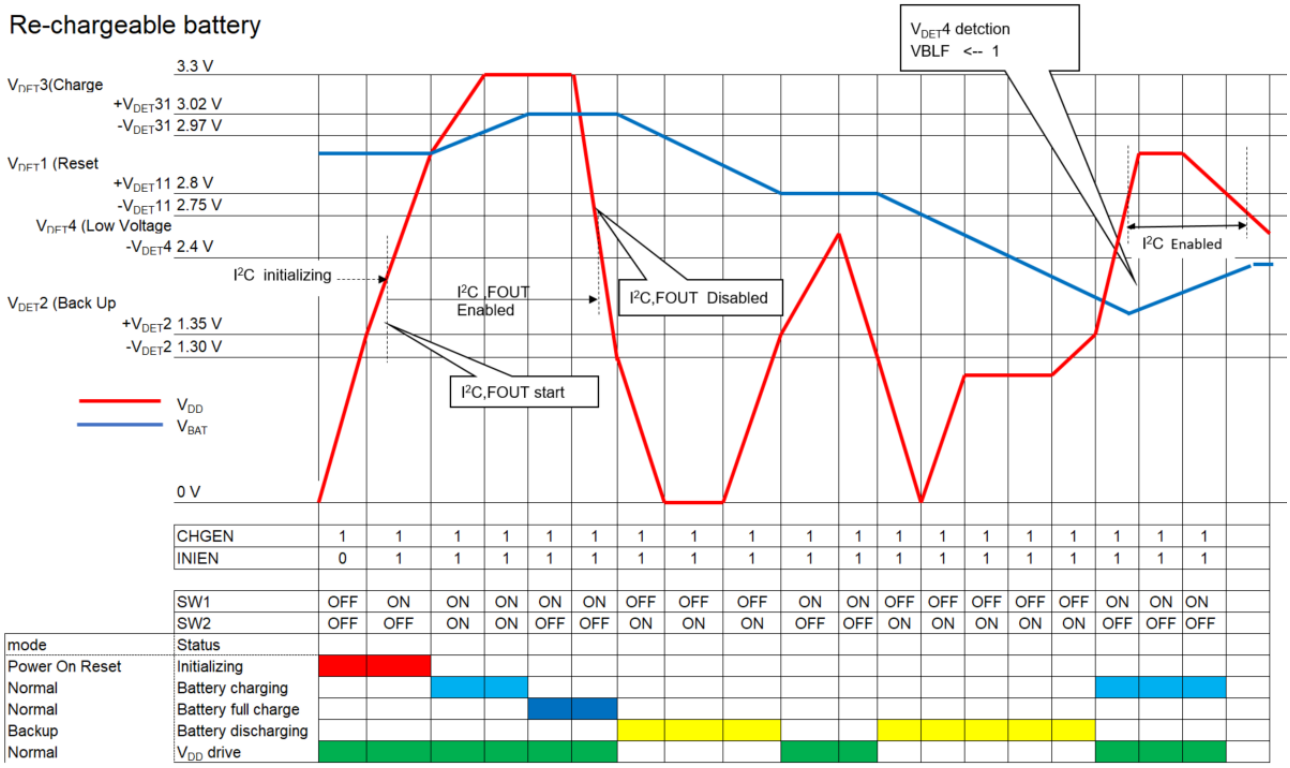

Figure 38 Re-chargeable battery operation

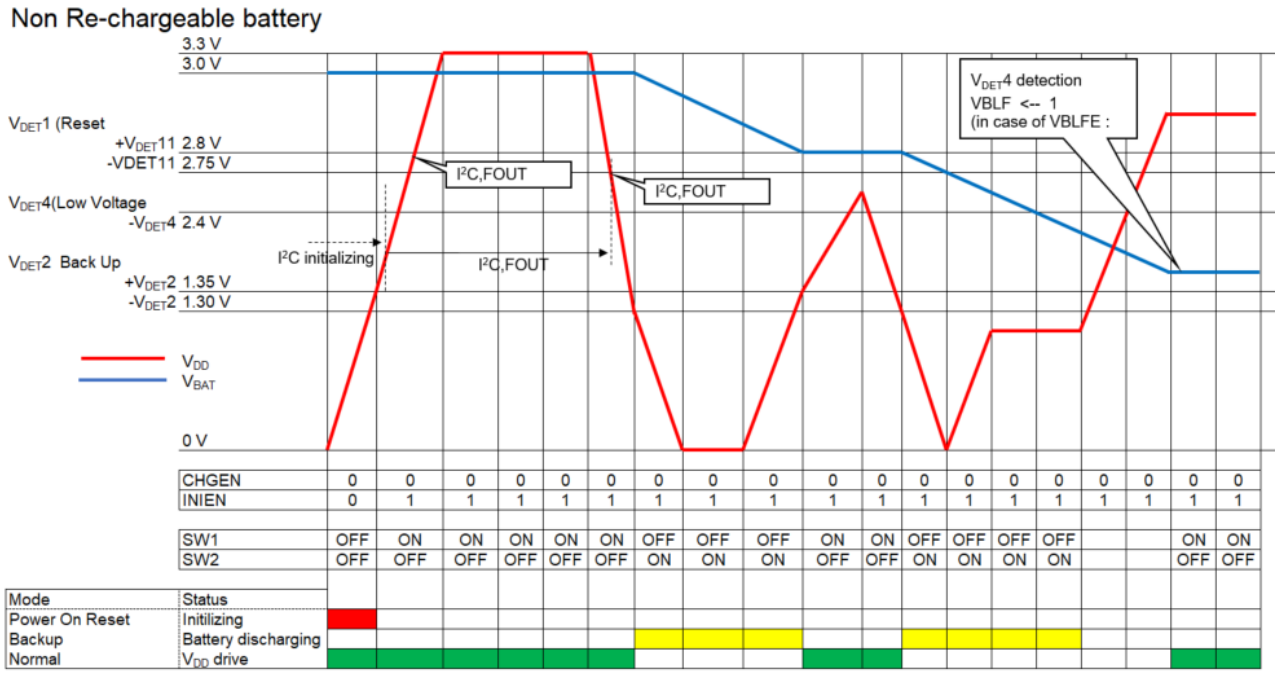

Figure 39 Non re-chargeable battery operation

15.8. Main power supply (V_{DD}) voltage and operation state (INIEN bit = 1)

1) In case of a voltage drop

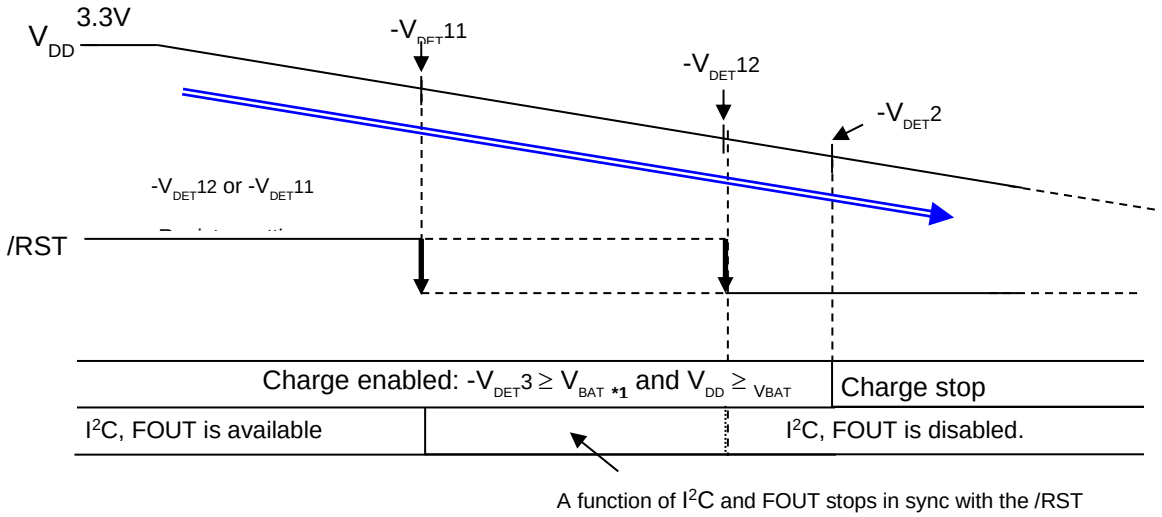

2) In case of a voltage rise

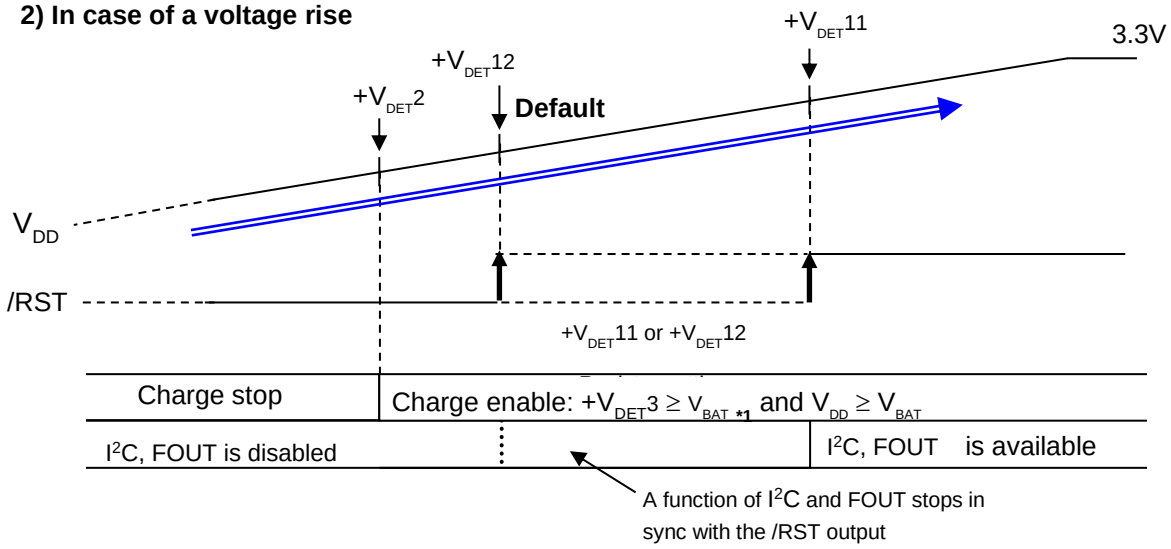

When full charge detection was deactivated ($V_{DET}3$) by register setting, V_{BAT} is only charged if V_{DD}

Figure 40 I²C, FOUT operation during voltage drop and rise

15.9. Backup power supply (V_{BAT}) voltage and a charge state

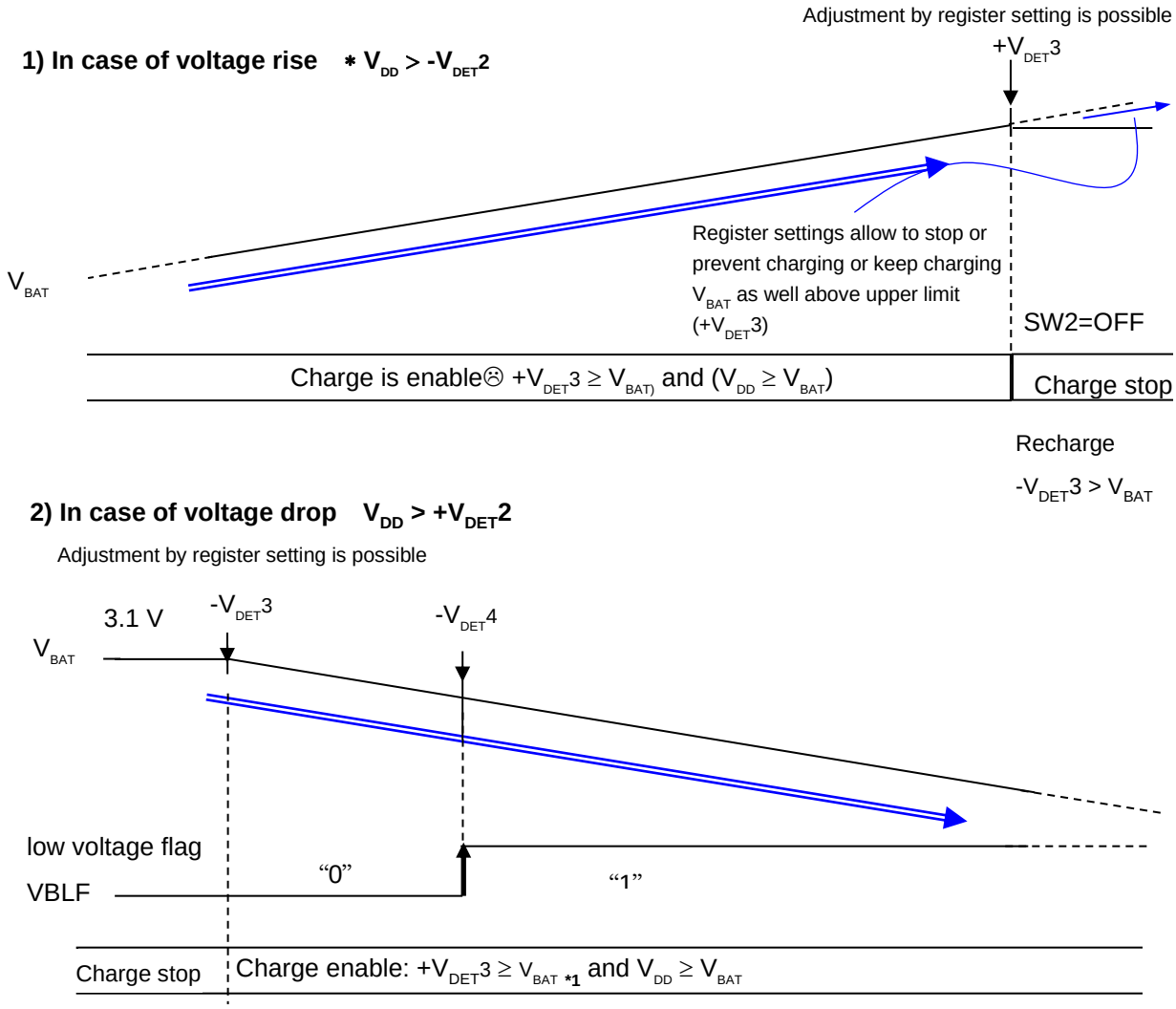

Figure 41 Re-chargeable battery operation during voltage rise and down

Battery life calculation Excel is available.->Download.

16. Reset output function

This RTC has a built-in Reset-Controller, which outputs a Reset-signal on the /RST-pin to control external HW like MCUs in case of a drop in supply voltage. When the V_{DD} voltage drops below $V_{DET}1$ (register selectable $V_{DET}11$ or $V_{DET}12$), a /RST-signal is output. Once V_{DD} raises beyond $V_{DET}1$ voltage again, the /RST-signal is released.
In case INIEN bit is set to "1", I^2C and FOUT are stopped when V_{DD} drops below $V_{DET}1$.

14.8.1. Related register of reset output function

Address h	Function	bit 7	bit 6	bit 5	bit 4	bit 3	bit 2	bit 1	bit 0
1D	Flag Register	VBLF	**0**	UF	TF	AF	**RSF**	VLF	VBFF
1F	Control Register1	SMP TSEL1	SMP TSEL0	CHG EN	INIEN	**0**	**RS VSEL**	BF VSEL1	BF VSEL0

1) RSVSEL-bit

Setting of $V_{DET}1$ voltage level. In case V_{DD} drops below this level, the /RST-signal is output and the I/F and FOUT output are stopped (depending on INIEN-bit setting).

Table 43 RSVSEL

RSVSEL	Data	Description
Write / Read	0	$-V_{DET11}$ (2.75 V) (default)
	1	$-V_{DET12}$ (2.70 V)

2) RSF-bit

This bit holds the result of detecting the reset voltage.

Table 44 RSF bit

RSF	Data	Description
Write	0	The RSF is cleared to 0 and waiting for next low voltage detection.
	1	Invalid (writing a 1 will be ignored)
Read	0	-
	1	A voltage drops below $-V_{DET}1$ was detected.

17. Digital offset function

With this function it is possible to increase or decrease the speed of the time counting and thus put a positive or negative offset to the clock precision. The adjustment range for this offset correction is $+192.3\times10^{-6}$ to -195.3×10^{-6} in steps of 3.05×10^{-6}.

17.1. Digital offset register

Address h	Function	bit 7	bit 6	bit 5	bit 4	bit 3	bit 2	bit 1	bit 0
30	Digital offset	DTE	L7	L6	L5	L4	L3	L2	L1

- DTE="1" enables the digital offset function.
  When the digital offset function is enabled, the digital offset register digitally offsets the sub-second clocks according to the values set in the digital offset register. This correction of the second time register occurs every 10 seconds and the level of correction depends on the offset required. When outputting a 32.768 kHz signal on FOUT-pin , this function has no influence, since the oscillation frequency of the built-in crystal does not change by using this function. In case of outputting a 1 Hz or 1024 Hz signal on FOUT, the offset correction will cause a certain jitter on the clock signal.
  Alarm function as well as the Wakeup Timer function (if source clock lower than 4096 Hz is selected) are affected by this function.

- In order to disable the digital offset function, set to DTE = "0". In this case the L1 to L7 are ignored.

- Below table shows the relationship of the L7~L1 bit and the digital offset value

  When the L7 bit = "0", the offset is positive (clock runs faster), when the L7 bit = "1", the offset is negative (the clock runs slower).

Table 45 Digital Adjustment

Digital offset bits							Offset value
L7	L6	L5	L4	L3	L2	L1	($\times 10^{-6}$)
0	1	1	1	1	1	1	+192.26
0	1	1	1	1	1	0	+189.21
			• •				• •
0	0	0	0	0	1	0	+6.10
0	0	0	0	0	0	1	+3.05
0	0	0	0	0	0	0	±0.00
1	1	1	1	1	1	1	−3.05
1	1	1	1	1	1	0	−6.10
			• •				• •
1	0	0	0	0	0	1	−192.26
1	0	0	0	0	0	0	−195.31

The offset value is calculated on basis of a shift of the built-in crystal frequency.

Digital Offset calculation Tool by Excel is available.->Download.

- How to calculate the offset value

1) When the offset value is positive:

L [7 ~ 1] =[Offset Value]/ 3.05 However, decimals are discarded.

Example calculation: When the offset value is +192 × 10^{-6}

L[7 ~ 1] = 192.26 / 3.05 = 63 (Dec)

= 0111111(bin) is set.

2) When the offset value is negative:

L[7 ~ 1] = 128 – [Offset Value] / 3.05 However, decimals are discarded.

Example calculation: When the offset value is –158 × 10^{-6}

L[7 ~ 1] = 128 - (158 / 3.05) = 76(Dec) = 1001100(bin) is set.

3) When calculate from accuracy of a clock

To adjust 30 seconds in 30 days:

Example calculation: 30sec. / 2592000s (30days) = 11.57 × 10^{-6}

Positive offset

L[7 ~ 1] = 11.57 / 3.05 = 4 (Dec) However, decimals are discarded.

= 0000100(bin) is set.

Negative offset

L[7 ~ 1] = 128 – (11.57 / 3.05) = 124 (Dec) However, decimals are discarded.

= 1111100(bin) is set.

17.2. Effect of the digital offset function to other functions

Because this function adjusts an internal sub-second clock, this function affects the a Wakeup timer interrupt function and FOUT function

1) FOUT function

- 1 Hz setting: Once in 10 seconds, the 1 Hz period fluctuates.
- 1024 Hz setting: Once in 10 seconds, the 1024 Hz period fluctuates.

∗There are cases where there is no fluctuation, depending on the offset correction value.

- 32.768 kHz Not affected.

2) Wakeup timer interrupt function

- 64 Hz or 1 Hz source clock setting: Once in 10 seconds, the period fluctuates.
  When the timer intervals are long, the fluctuations appear small.

- 4096 Hz source clock setting: Not affected.

18. Flow-chart

The following flow-chart is one example, but it is not necessarily applicable for every use-case and not necessarily the most effective process for individual applications.

18.1 Initializing example

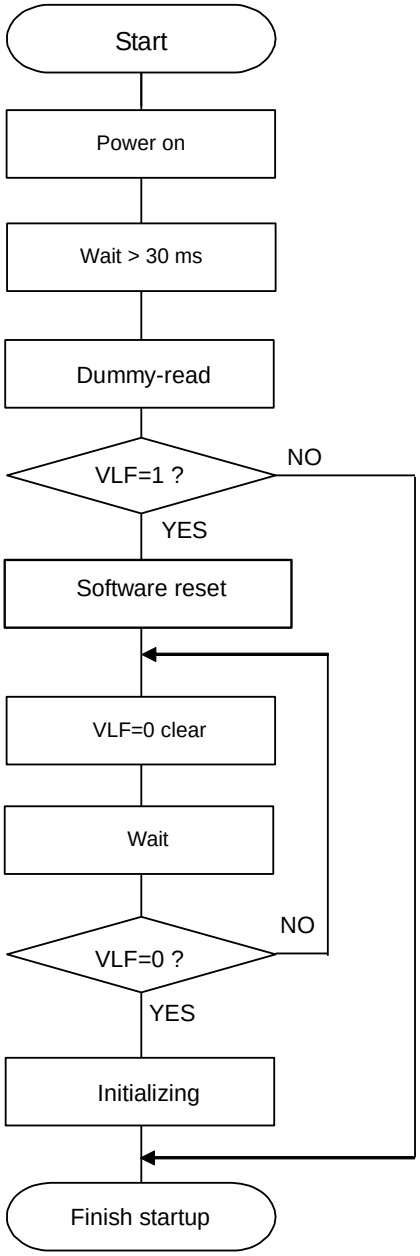

• At least 30 ms wait time is needed. So that it is stable RTC.
40 ms is not oscillation startup time

•When the power supply conditions for which Power-On Reset is executed cannot be satisfied, then must be execute a Dummy-read.
Dummy read is one time read access to a free address
Ignore ACK / NACK from RX8130CE in Dummy-read.

Judge RX8130CE returned from backup normally, or fail.

When the power conditions for which the power-on reset is executed are not satisfied, execute a software reset.
For [Software Reset], start from *"4) of "18.2 Software Reset."*

VLF cannot be cleared to 0 until internal oscillation starts.・

Set any waiting time.

Set the maximum number of loops, for an trouble of crystal oscillation

Figure 42 Example flow (Power initialization)

18.2 Software Reset

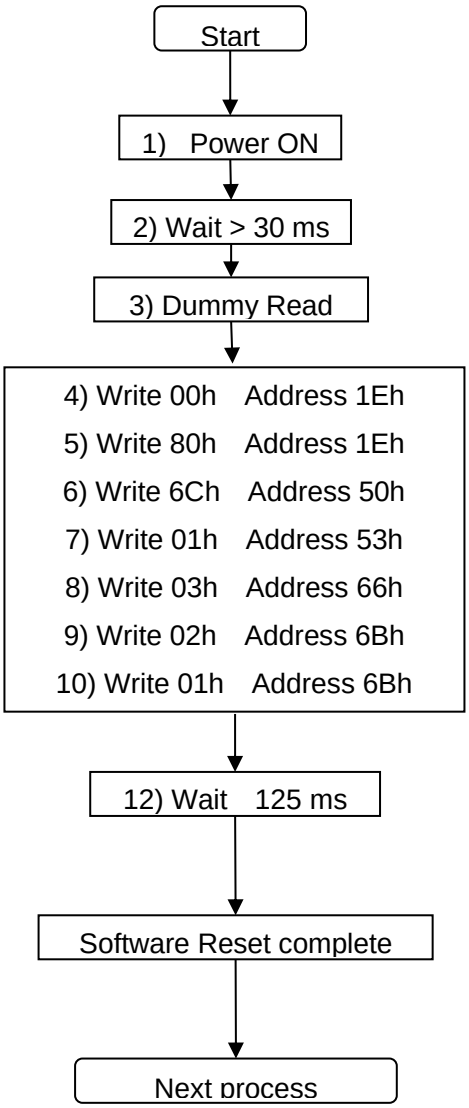

Initialization same as Power-On Reset is performed by this processing.
As for the register value after software reset,
See *13.2.2. Register initial value.*

Notes.
It has possibility leak current occurs from step 6) to step 10).
because all power switch are turned to ON while this.
After step 5), please complete the process immediately.

3) In a dummy lead, ignore NACK/ACK from RTC.

10) TEST bit is cleared automatically in step10.

Both time and a calendar register are not initialized in any values by this Software Reset.
Both a calendar and Time before reset are maintained.

/RST signal outputs Low 95ms Max from step10.
Please care /RST active signal.
And a VLF bit is set to 1.
Please clear VLF to 0.

Figure 43 Example Flow(Software Reset)

18.3 Example of Initialization routine

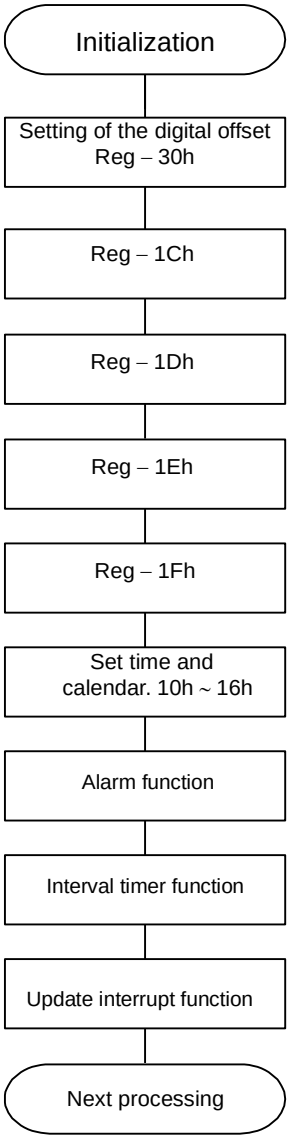

- When the digital offset function is not being used, write 0 in the DTE bit.

- Clear TE bit to “0”.
- Set FSEL1, 0 bit optionally.

- Clear VLF bit to “0”.
  State of VLF=1 is held even if it 0 clear until oscillation start. When initialize it without waiting for an oscillation start, Clear VLF bit after an oscillation start.

Clear TEST bit to 0.
Clear AIE, TIE, UIE for inhibit interrupt output of suddenness.

Set INIEN to 1.
When it is used in INIEN=0, please set it in INIEN=0 again after setting INIEN to 1 once. Also refer INIEN bit.

- Set the present time.
  ∗ Setting the present time concerned.

See 14.1. Clock calendar explanation.

- Configure the Alarm interrupt function.
  When the alarm interrupt function is not being used, the Alarm registers can be used as a RAM register. In such cases, be sure to write "0" to the AIE bit.
- Configure the interval timer function.
  When the interval Timer function is not being used, the Timer Counter register can be used as a RAM register. In such cases, stop the interval timer function by writing "0" to the TE and TIE bits.
- Configure the Update interrupt function.

∗ When initialization is finished, be sure to set STOP bit to “0”.

Figure 44 Example flow (Initialization)

18.4 Example of Initialization routine (only clock usage)

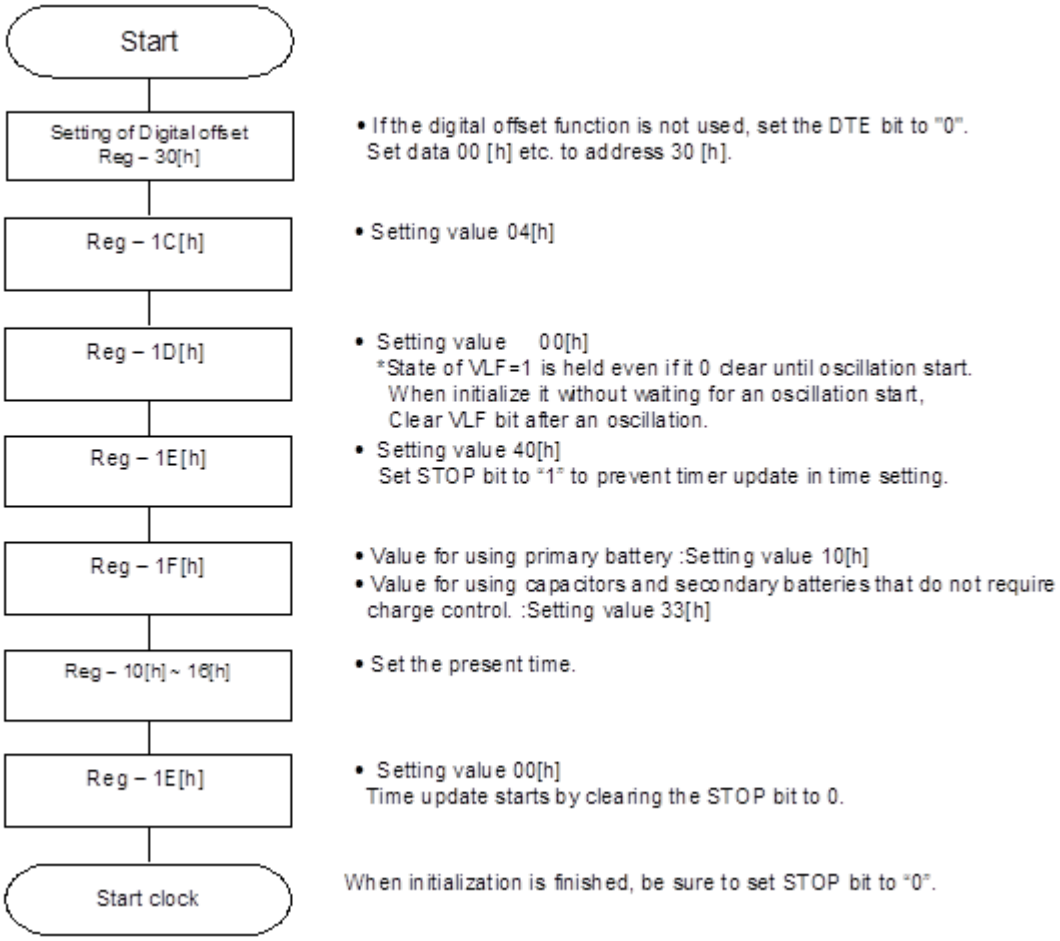

Figure 45 Example flow (initialization only clock usage)

18.5 The setting of the clock and calendar

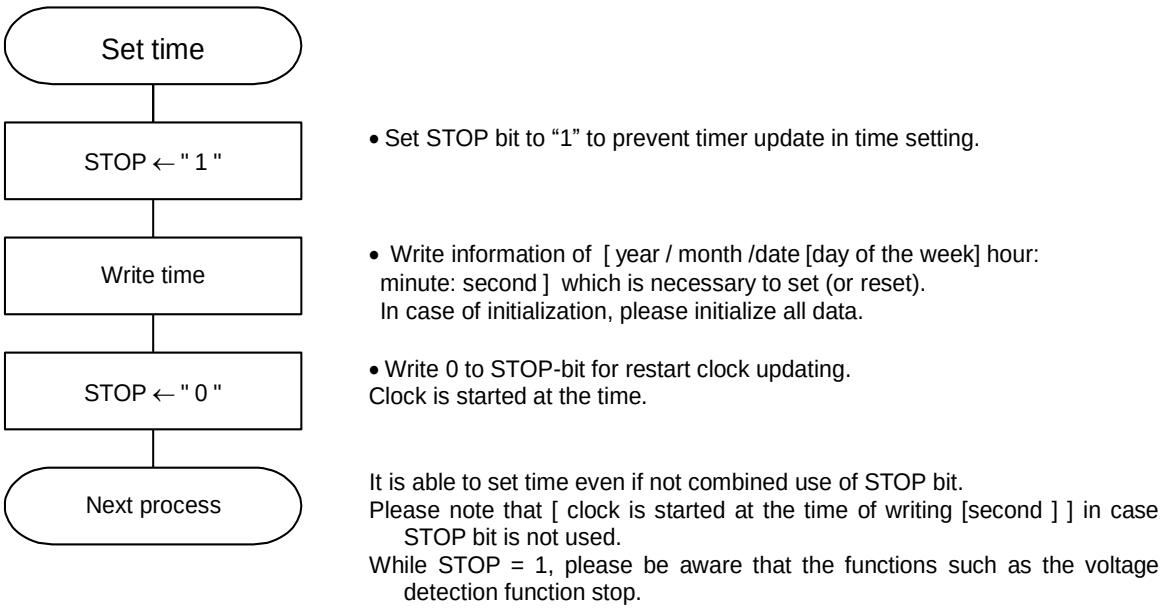

Figure 46 Example flow (Clock, calendar setting)

18.6 The reading of the clock and calendar

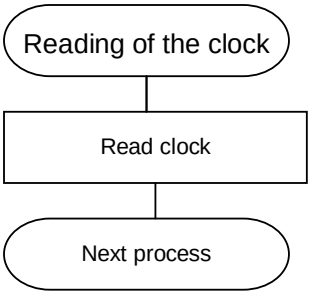

- Please complete access within 0.95 seconds
  The STOP bit holds "0".
  (It causes the clock delay to set STOP bit to “1”)
- At the time of a communication start, the Clock & Calendar data are fixed (hold the carry operation), and it is automatically revised at the time of the communication end.
- The access to a clock calendar recommends to have access to continuation by a auto increment function.

Figure 47 Example flow (Clock, calendar reading)

18.7 Setting example of the wakeup timer interrupt function

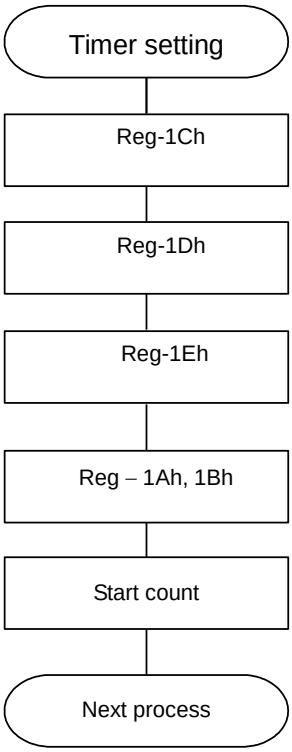

- Clear TE bit to “0” to stop timer-interrupt function.
- The countdown period is fixed by the combination of the TSEL2, TSEL1, TSEL0 bit.

- Clear TF bit to “0” to cancel last timer interrupt output (/IRQ output).

- Select and set /IRQ output
- Select a power supply condition of a count

- Set initial value of down counter.

- Set TE bit to "1" to start timer interrupt function.
  When start timers interrupt function, please surely set/reset (*implement 2) initial value of down counter in advance.

∗1 Countdown is suspended with TSTP, " 0 " → " 1 " and countdown is performed again with TSTP, " 1 " → " 0 "

∗2 When you want to restart from a pre-set value, please set a TE bit to “1” again after setting a TE bit to “0”.

Figure 48 Example flow (Wakeup timer interruption)

18.8 Setting example of the Alarm interrupt function

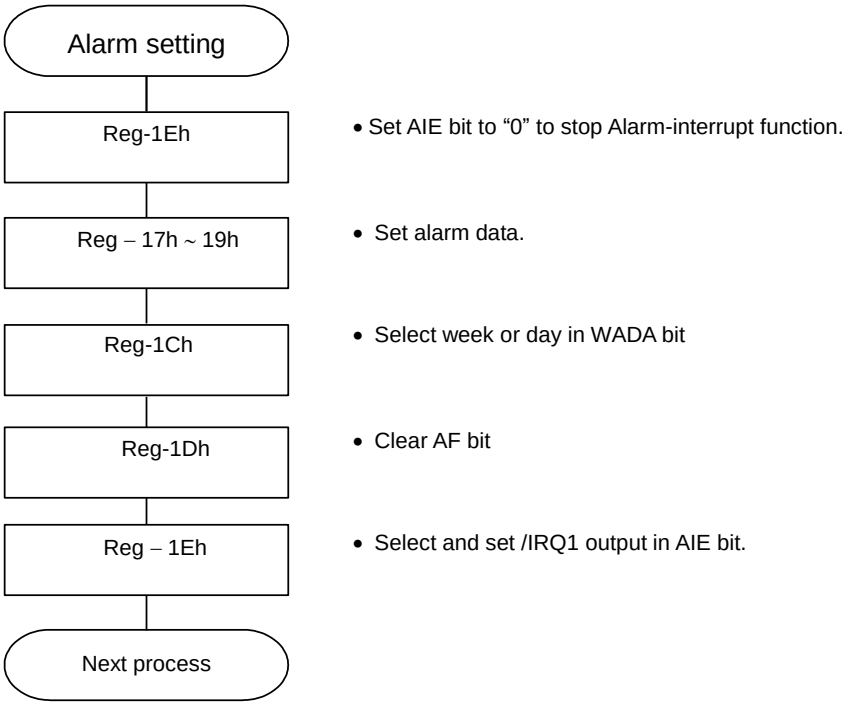

Figure 49 Example flow (Alarm interruption)

19 Serial communication

19.1 Overview of I²C-Bus Interface

The I²C-bus supports bi-directional communications via two signal lines: the SDA (data) line and SCL (clock) line. A combination of these two signals is used to transmit and receive communication start/stop signals, data transfer signals, acknowledge signals, and so on.

Both the SCL and SDA signals are held at high level whenever communications are not being performed.
The starting and stopping of communications is controlled at the rising edge or falling edge of SDA while SCL is at high level.

19.2 Data transfers

Data transfers are performed in 8-bit (1 byte) units once the START condition has occurred. There is no limit on the amount (bytes) of data that are transferred between the START condition and STOP condition.
(However, the transfer time must be no longer than 0.95 seconds.)

19.3 Starting and stopping I²C-Bus communications

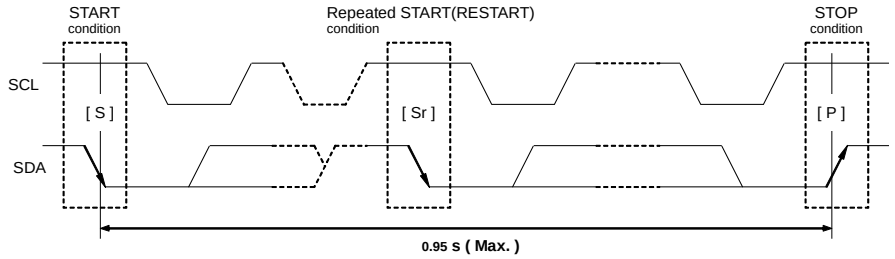

Figure 50 I²C-Bus start/stop timing

1) START condition, repeated START condition, and STOP condition
   (1) START condition
      • The SDA level changes from high to low while SCL is at high level.
   (2) STOP condition
      • This condition regulates how communications on the I²C-Bus are terminated.
      The SDA level changes from low to high while SCL is at high level.
   (3) Repeated START condition (RESTART condition)

• In some cases, the START condition occurs between a previous START condition and the next STOP condition, in which case the second START condition is distinguished as a RESTART condition. Since the required status is the same as for the START condition, the SDA level changes from high to low while SCL is at high level.

• When accessing this device, all communication from transmitting the start condition to transmitting the stop condition after access should be completed within 0.95 seconds. If communication requires 0.95 seconds or longer, the I²C bus interface is reset by the internal bus timeout function.

19.4 Slave address

The I²C-Bus devices do not have any chip select or chip enable pins. All I²C-Bus devices are memorized with a fixed unique number in it. The chip selection on the I²C-Bus is executed, when the interface starts, the master device sends the required slave address to all devices on the I²C-Bus. The receiving device only reacts for interfacing, when the required slave address is agreed with its own slave address.
During in actual data transmission, the transmitted data contains the slave address and the data with R/W

← Slave address →							R/W bit
bit 7	bit 6	bit 5	bit 4	bit 3	bit 2	bit 1	bit 0
0	1	1	0	0	1	0	R/W
0 is Write mode 1 is Read mode							

19.5 System configuration

All ports connected to the I²C-Bus must be either open drain or open collector ports in order to enable AND connections to multiple devices.

SCL and SDA are both connected to the VIO line via a pull-up resistance. Consequently, SCL and SDA are both held at high level when the bus is released (when communication is not being performed).

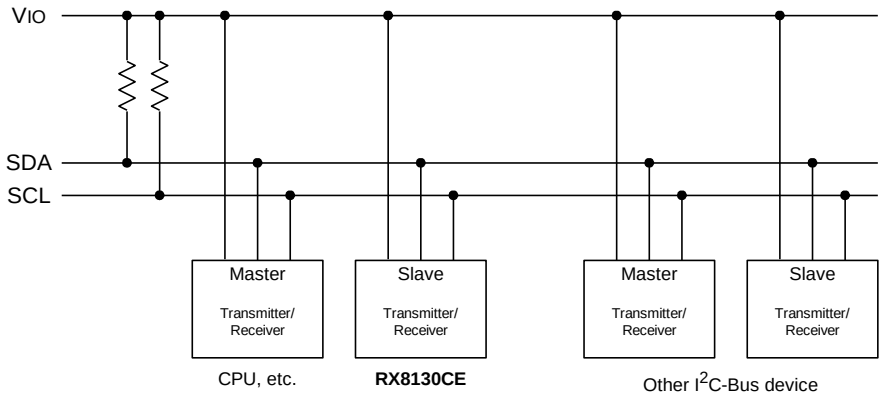

Figure 51 I²C-Bus connection

Any device that controls the data transmission and data reception is defined as a "Master".
and any device that is controlled by a master device is defined as a “Slave”.
The device transmitting data is defined as a “Transmitter” and the device receiving data is defined as a receiver”

In the case of this RTC module, controllers such as a CPU are defined as master devices and the RTC module is defined as a slave device. When a device is used for both transmitting and receiving data, it is defined as either a transmitter or receiver depending on these conditions.

19.6 I²C-Bus protocol

In the following sequence descriptions, it is assumed that the CPU is the master and the RX8130CE is the slave.

1) Address specification write sequence

Since the RX8130CE includes an address auto increment function, once the initial address has been specified, the RX8130 increments (by one byte) the receive address each time data is transferred.

Address circulation of auto increment function.	10h ->1Fh -> 10h
	20h ->2Fh -> 20h
	30h ->3Fh -> 30h

(1) CPU transfers start condition [S].

(2) CPU transmits the RX8130CE's slave address with the R/W bit set to write mode.

(3) Check for ACK signal from RX8130CE.

(4) CPU transmits write address to RX8130CE.

(5) Check for ACK signal from RX8130CE.

(6) CPU transfers write data to the address specified at (4) above.

(7) Check for ACK signal from RX8130CE.

(8) Repeat (6) and (7) if necessary. Addresses are automatically incremented.

(9) CPU transfers stop condition [P].

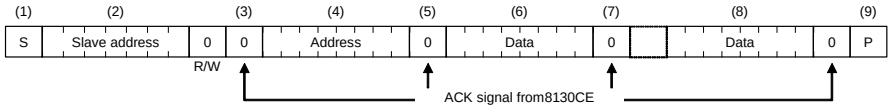

2) Address specification read sequence

After using write mode to write the address to be read, set read mode to read the actual data.

(1) CPU transfers start condition [S].

(2) CPU transmits the RX8130CE's slave address with the R/W bit set to write mode.

(3) Check for ACK signal from RX8130CE.

(4) CPU transfers address for reading from RX8130CE.

(5) Check for ACK signal from RX8130CE.

(6) CPU transfers RESTART condition [Sr] (in which case, CPU does not transfer a STOP condition [P]).

(7) CPU transfers RX8130'CEs slave address with the R/W bit set to read mode.

(8) Check for ACK signal from RX8130CE (from this point on, the CPU is the receiver and the RX8130 is the transmitter).

(9) Data from address specified at (4) above is output by the RX8130.

(10) CPU transfers ACK signal to RX8130CE.

(11) Repeat (9) and (10) if necessary. Read addresses are automatically incremented.

(12) CPU transfers ACK signal for "1".

(13) CPU transfers stop condition [P].

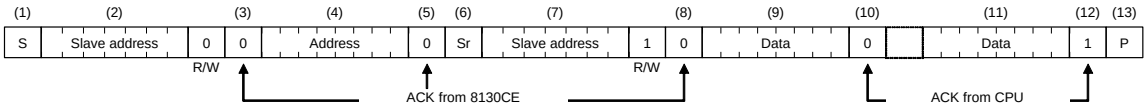

3) Read sequence when address is not specified

Once read mode has been initially set, data can be read immediately. In such cases, the address for each read operation is the previously accessed address + 1.

(1) CPU transfers start condition [S].

(2) CPU transmits the RX8130CE's slave address with the R/W bit set to read mode.

(3) Check for ACK signal from RX8130CE (from this point on, the CPU is the receiver and the RX8130CE is the transmitter).

(4) Data is output from the RX8130 to the address following the end of the previously accessed address.

(5) CPU transfers ACK signal to RX8130CE.

(6) Repeat (4) and (5) if necessary. Read addresses are automatically incremented in the RX8130.

(7) CPU transfers ACK signal for "1".

(8) CPU transfers stop condition [P].

20 Circuit Diagram connection

20.1 Typical MCU connection

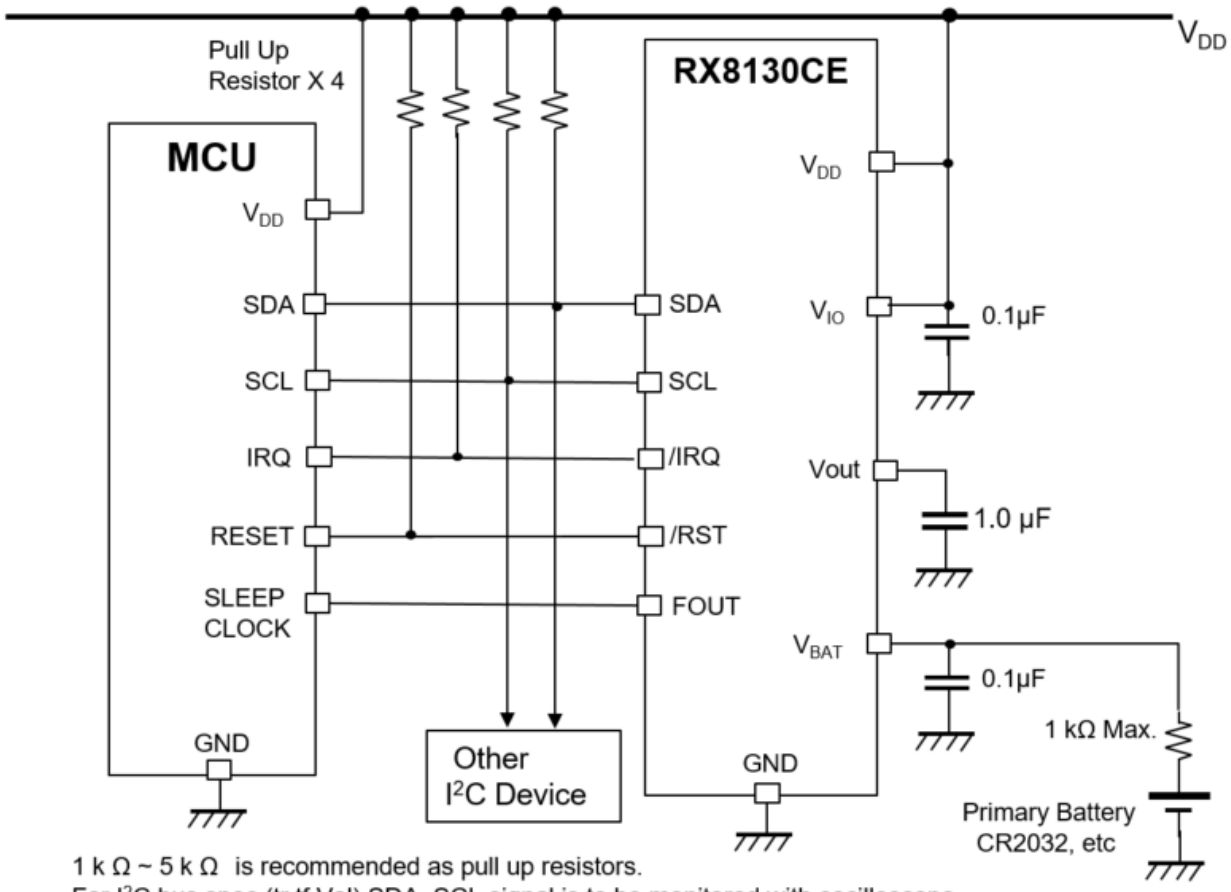

1 k Ω ~ 5 k Ω is recommended as pull up resistors.
For I²C bus spec (tr,tf,Vol),SDA, SCL signal is to be monitored with oscilloscope.
Each capacitor should be located in the vicinity area of RTC pins.
The capacitor to Vout pin is 1.0μF, bigger than others.

Figure 52 Typical MCU connection

20.2 32.768 kHz oscillator application connection

See also *14.6. FOUT function*

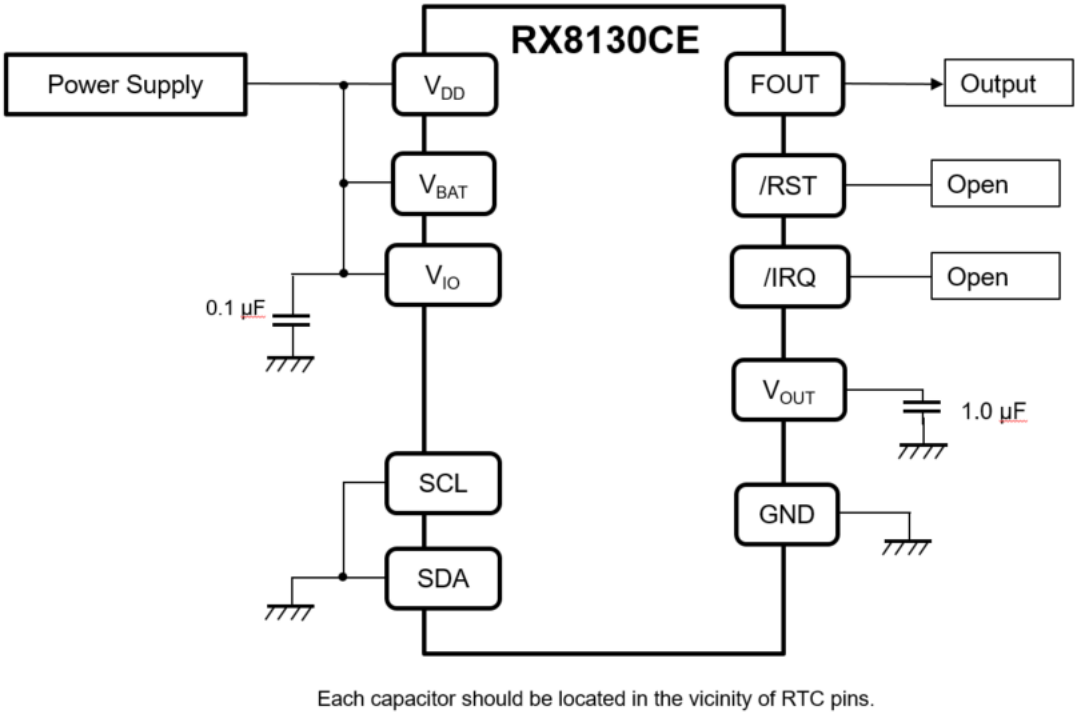

Figure 53 32.768 kHz oscillator connection

21. Tables

Table 1 Pin Description 8
Table 2 Absolute Maximum Rating 12
Table 3 Recommended Operation Condition 12
Table 4 Frequency Characteristics 12
Table 5 DC characteristics (1) 13
Table 6 DC characteristics(2) 14
Table 7 AC characteristics 15
Table 8 AC characteristics (FOUT) 15
Table 9 AC Characteristics (Reset) 16
Table 10 Reset timing 16
Table 11 Power supply characteristics 18
Table 12 Register Table 22
Table 13 Register initial value, Read/Write 23
Table 14 Time, calendar setting example (Sun, 29-Feb-88 17:39:45 (leap year) 26
Table 15 Setting example of the week register value 27
Table 16 Countdown period (source clock) selection 28
Table 17 Wakeup timer control 29
Table 18 Wakeup timer interrupt detection flag 30
Table 19 Wakeup timer interrupt control 30
Table 20 Wakeup timer normal mode/backup mode control 30
Table 21 Wakeup timer stop control 30
Table 22 Wakeup timer interrupt cycles 32
Table 23 WEEK/DAY control 35
Table 24 Alarm Flag 35
Table 25 Alarm Interrupt control 35
Table 26 WEEK alarm example 35
Table 27 DAY alarm example 36
Table 28 Second/Minute selection 37
Table 29 Time update Flag 37
Table 30 Time update interrupt control 37
Table 31 Oscillation stop detection flag 39
Table 32 FOUT Frequency selection 39
Table 33 Reference characteristics of switching elements 40
Table 34 CHGEN bit 42
Table 35 INIEN bit 42
Table 36 Voltage detection timing 45
Table 37 VDET3, VDET4 intermittent detection period 45
Table 38 VDET1,VDET2,VDET3,VDET4 setting 47
Table 39 BFVSEL1, BFVSEL0 47

Table 40 VBFF 48
Table 41 VBLF 48
Table 42 VBLFE 48
Table 43 RSVSEL 52
Table 44 RSF bit 52
Table 45 Digital Adjustment 53

22. Figures

Figure 1 Block Diagram 7
Figure 2 Package 8
Figure 3 Circuit EX1 9
Figure 4 Circuit EX2 9
Figure 5 Circuit EX3 9
Figure 6 Circuit EX4 9
Figure 7 Circuit EX5 10
Figure 8 Circuit EX6 10
Figure 9 External Dimension and Soldering pattern 11
Figure 10 Marking Layout 11
Figure 11 I^2C-Bus Interface Timing Chart 15
Figure 12 Reset signal timing chart (Power Initial Supply) 16
Figure 13 Reset signal timing chart (Backup resume) 16
Figure 14 Power supply initial sequence 17
Figure 15 Power-On sequence1 18
Figure 16 Power-On sequence2 18
Figure 17 Power-on order 19
Figure 18 Frequency temperature characteristics 19
Figure 19 Basic (32.768 k Hz oscillation, counter, FOUT) Function 26
Figure 20 Wakeup timer initial sequence 29
Figure 21 Wakeup timer block diagram 29
Figure 22 Wakeup timer start sequence 31
Figure 23 Wakeup timer inner block diagram 32
Figure 24 Wakeup timer timing chart 33
Figure 25 Alarm interrupt inner block diagram 36
Figure 26 Alarm Interrupt time chart 36
Figure 27 Time update inner block diagram 38
Figure 28 Time update time chart 38
Figure 29 Battery backup switchover block diagram 40
Figure 30 V_{BAT} charge current characteristics V_{DD} = 3.0 V, 5.5 V 41
Figure 31 Re-chargeable battery connection 41
Figure 32 Non Re-chargeable battery SW1, SW2 control (INIEN = 1, CHGEN = 0) 43

Figure 34 Re-chargeable battery SW1, SW2 control (INIEN = 1, CHGEN = 1) 43
Figure 35 Battery backup (SW1, SW2 automatic control)..... 44
Figure 36 V_{DD} detection (VDET2) timing 46
Figure 37 VDET3, VDET4 voltage detection timing) BFVSEL1, BFVSEL0 bit 47
Figure 38 Re-chargeable battery operation..... 49
Figure 39 Non re-chargeable battery operation 49
Figure 40 I^2C, FOUT operation during voltage drop and rise..... 50
Figure 41 Re-chargeable battery operation during voltage rise and down 51
Figure 42 Example flow (Power initialization)..... 55
Figure 43 Example Flow(Software Reset)..... 56
Figure 44 Example flow (Initialization)..... 57
Figure 45 Example flow (initialization only clock usage) 58
Figure 46 Example flow (Clock, calendar setting) 58
Figure 47 Example flow (Clock, calendar reading)..... 59
Figure 48 Example flow (Wakeup timer interruption) 59
Figure 49 Example flow (Alarm interruption) 60
Figure 50 I^2C-Bus start/stop timing 61
Figure 51 I^2C-Bus connection..... 62
Figure 52 Typical MCU connection..... 65
Figure 53 32.768 kHz oscillator connection..... 66

RTC information and design tools

Latest lineup ---> LINK

Technical Tools ---------> LINK

Convenient Tools ---------- LINK

Parametric Search ---------->LINK