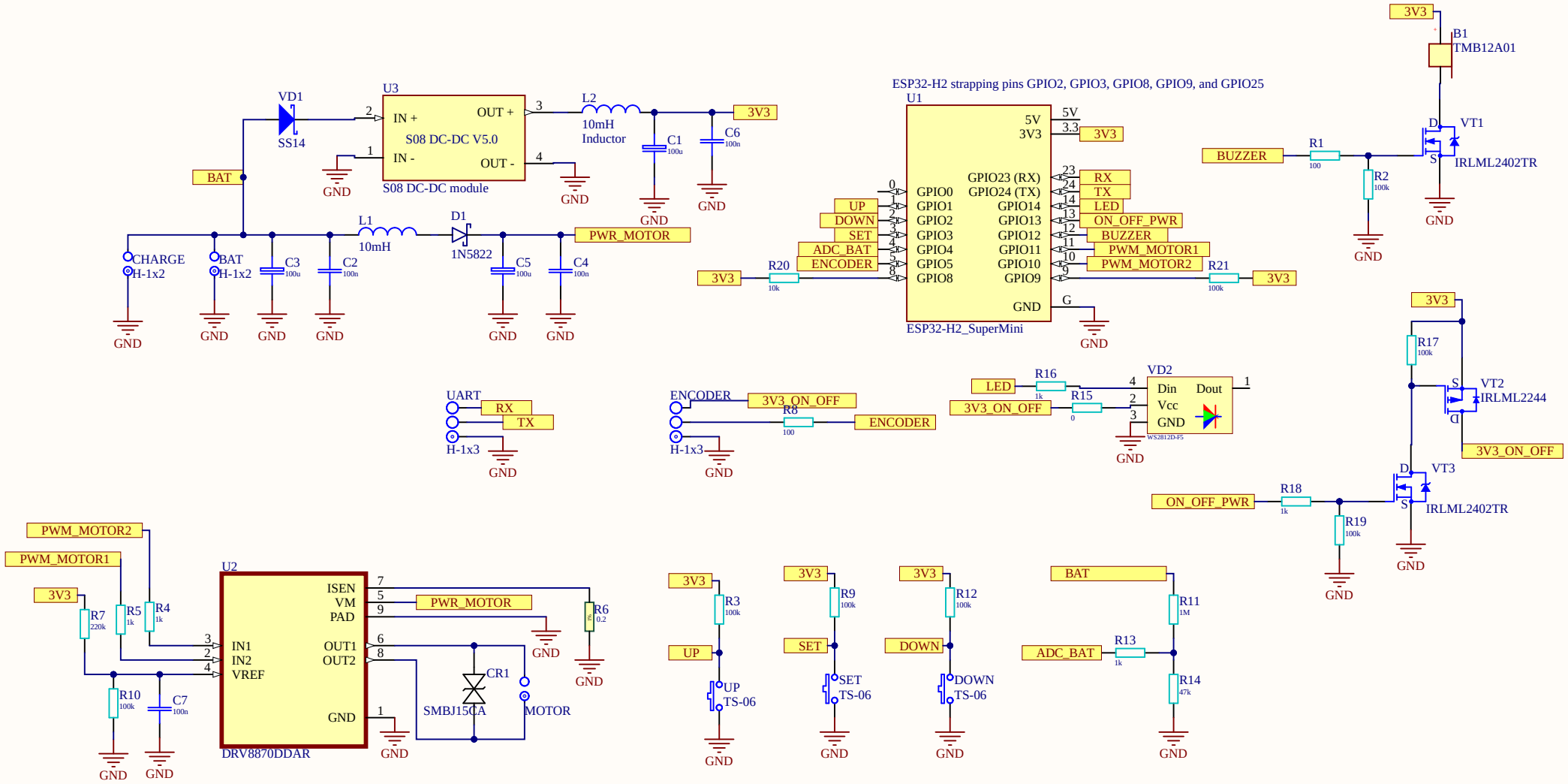

Title		
Size A4	Number	Revision
Date: 9.17.2026	Sheet of	
File: C:\avrprojects\..\esp32h2_light_sleep.SchDoc	Drawn By:	

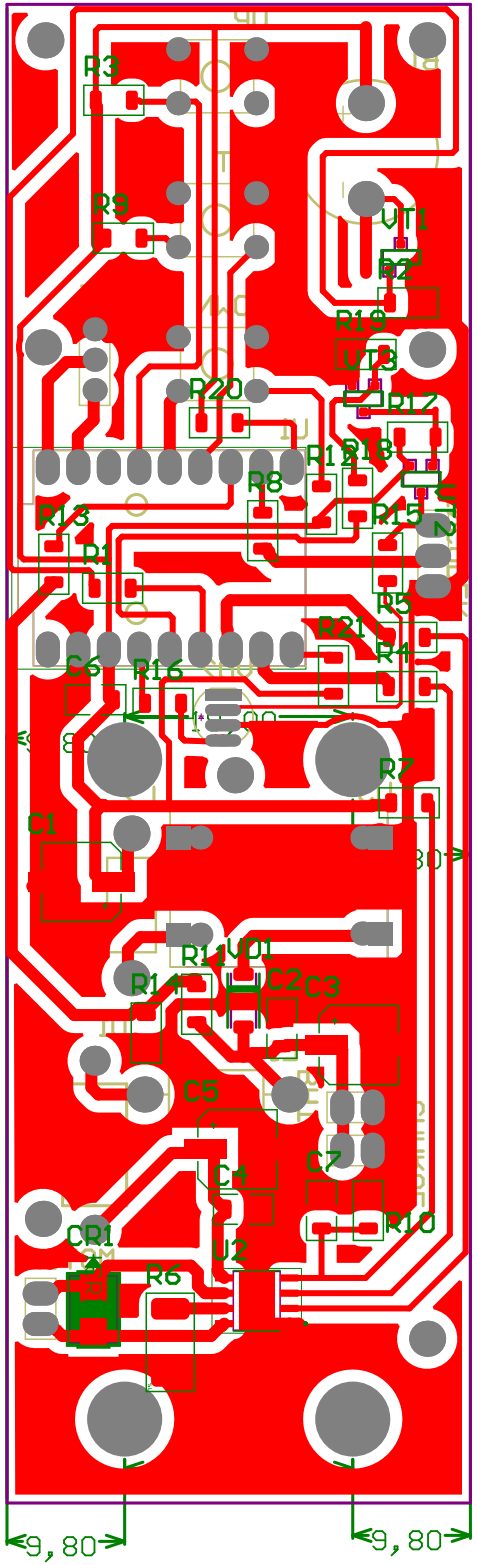
R3
R9
UT1
R2
R19
UT3
R20
R17
R12
R18
R8
R13
R15
R1
R5
R21
R4
C6
R16
R7
C1
R11
UD1
R14
C2
C3
C5
C4
C7
R10
CR1
U2
R6
9,80
9,80