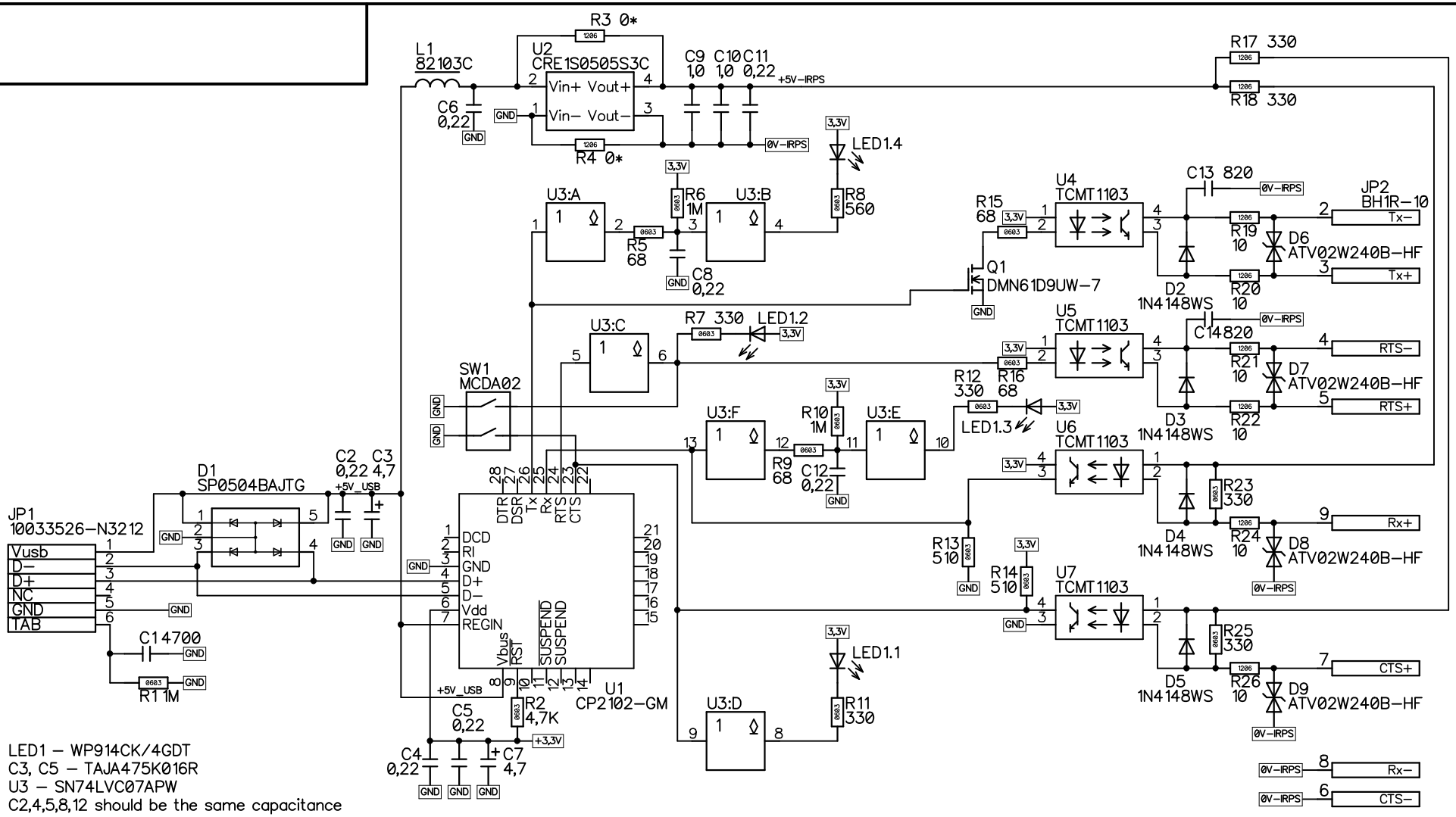

LED1 – WP914CK/4GDT
C3, C5 – TAJA475K016R
U3 – SN74LVC07APW
C2,4,5,8,12 should be the same capacitance

* – Install R3 and R4 if there is no U2 installed. In this case, current loop line is not fully isolated from USB voltage.

	Doc.Nr.	Sign.	Date
Design	Balins		
Checked	___		

Current loop interface v1.2

Proj. method	Scale
Sheet 1	Sheets 1