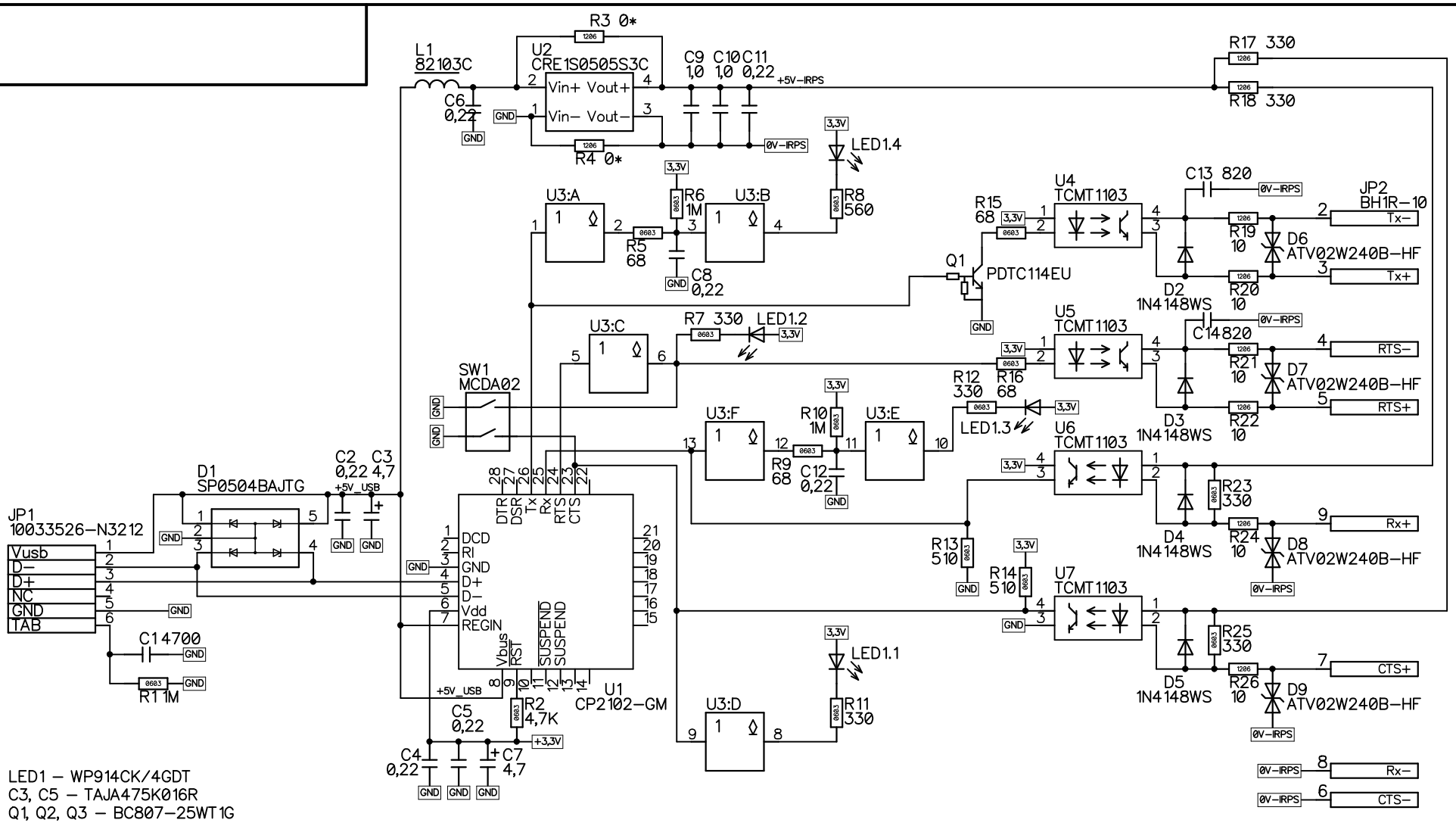

LED1 – WP914CK/4GDT
C3, C5 – TAJA475K016R
Q1, Q2, Q3 – BC807–25WT1G
U3 – SN74LVC07APW
C2,4,5,8,12 should be the same capacitance

		Doc.Nr.	Sign.	Date
Design		Balins		
Checked		___		

Current loop interface v1.2

Proj. method	Scale
Sheet 1	Sheets 1