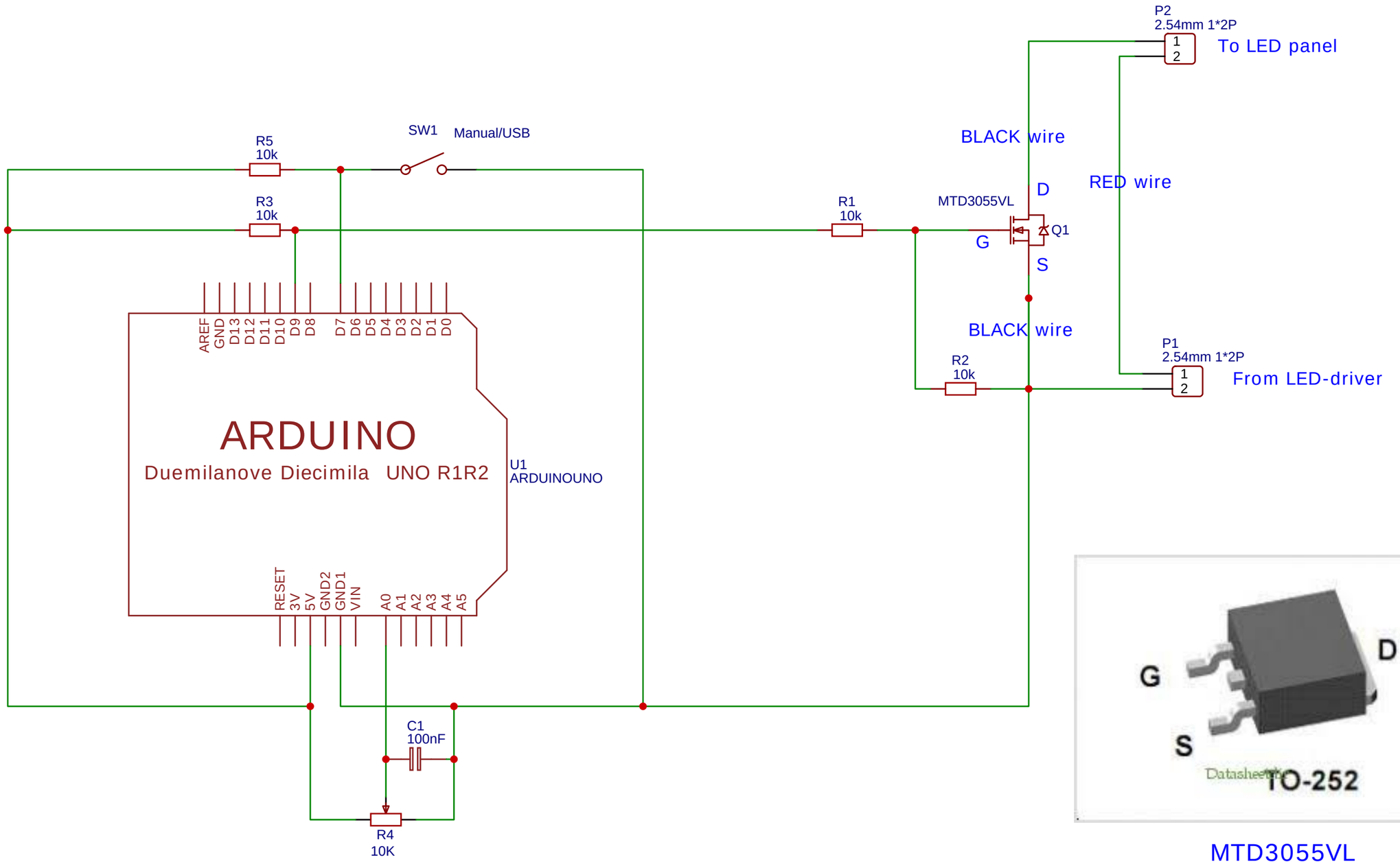

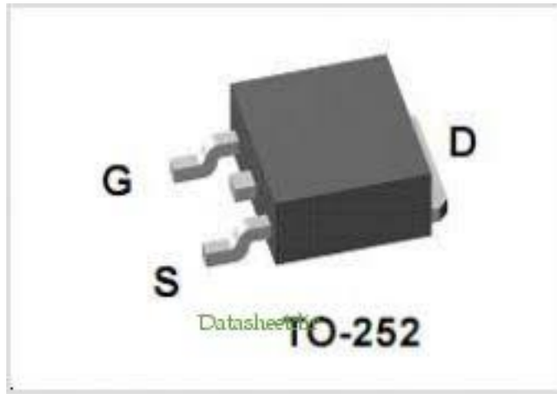

MTD3055VL
Or similar FET

TITLE: New Schematic	REV: 1.0
Date: 2018-03-16	Sheet: 1/1
EasyEDA V5.3.2	Drawn By: technoplusnl