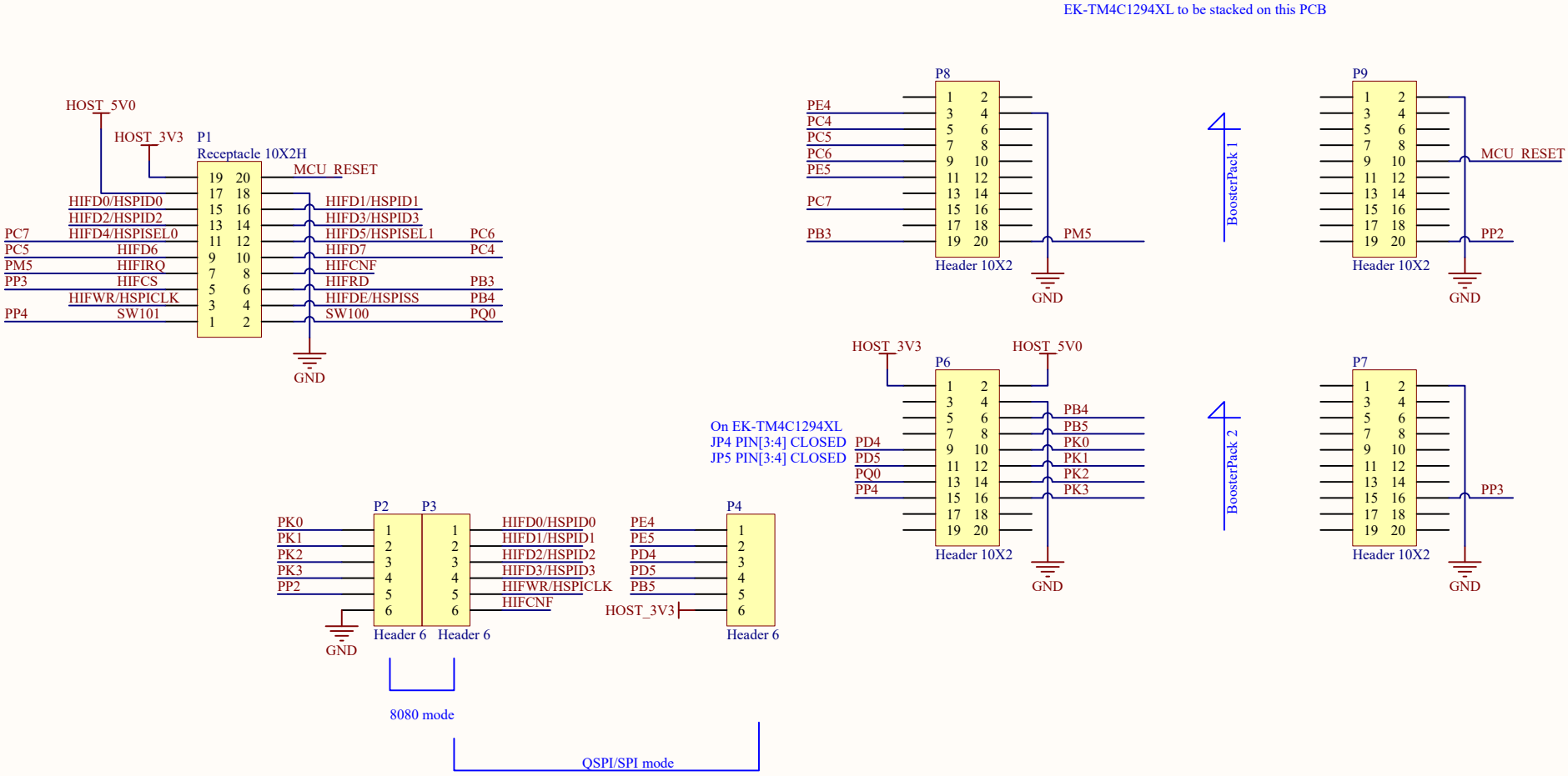

Title * Bridge Board for EK-TM4C1294XL			*
Size: A4	Number:*	Revision:* DTE20180709	*
Date: 12/3/2024	Time: 18:43:50	Sheet * of *	*
File: C:\Projects\Sharp Singapore\AD\TI-EK-TM4C1294XL-Bridge\EK-TM4C1294XL-Bridge-DTE20180709.SchDoc			