Arduino Interface compatible with Uno Rev3 form factor

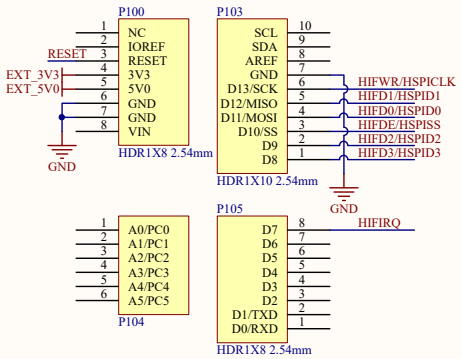

EK-TM4C1294XL interface

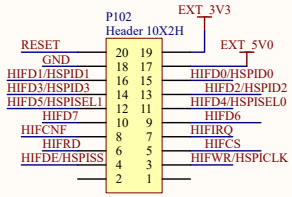

Host interface selection switch

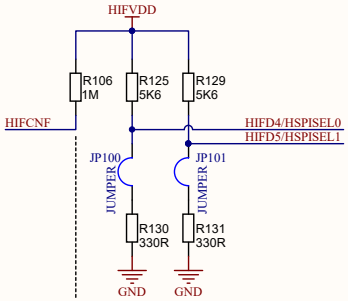

HIFCNF is connected to header P102:Pin8 with a weak pullup.
When P102 mates with EK-TM4C1294XL bridge board,
HIFCNF voltage level is selected by the jumper position of P3:Pin6
on the EK-TM4C1294XL bridge board.

If header P102 is not connected to anything, HIFCNF is pulled to HIFVDD by default.
Hence QSPI/SPI interface is selected when JP100 and JP101 unsoldered.

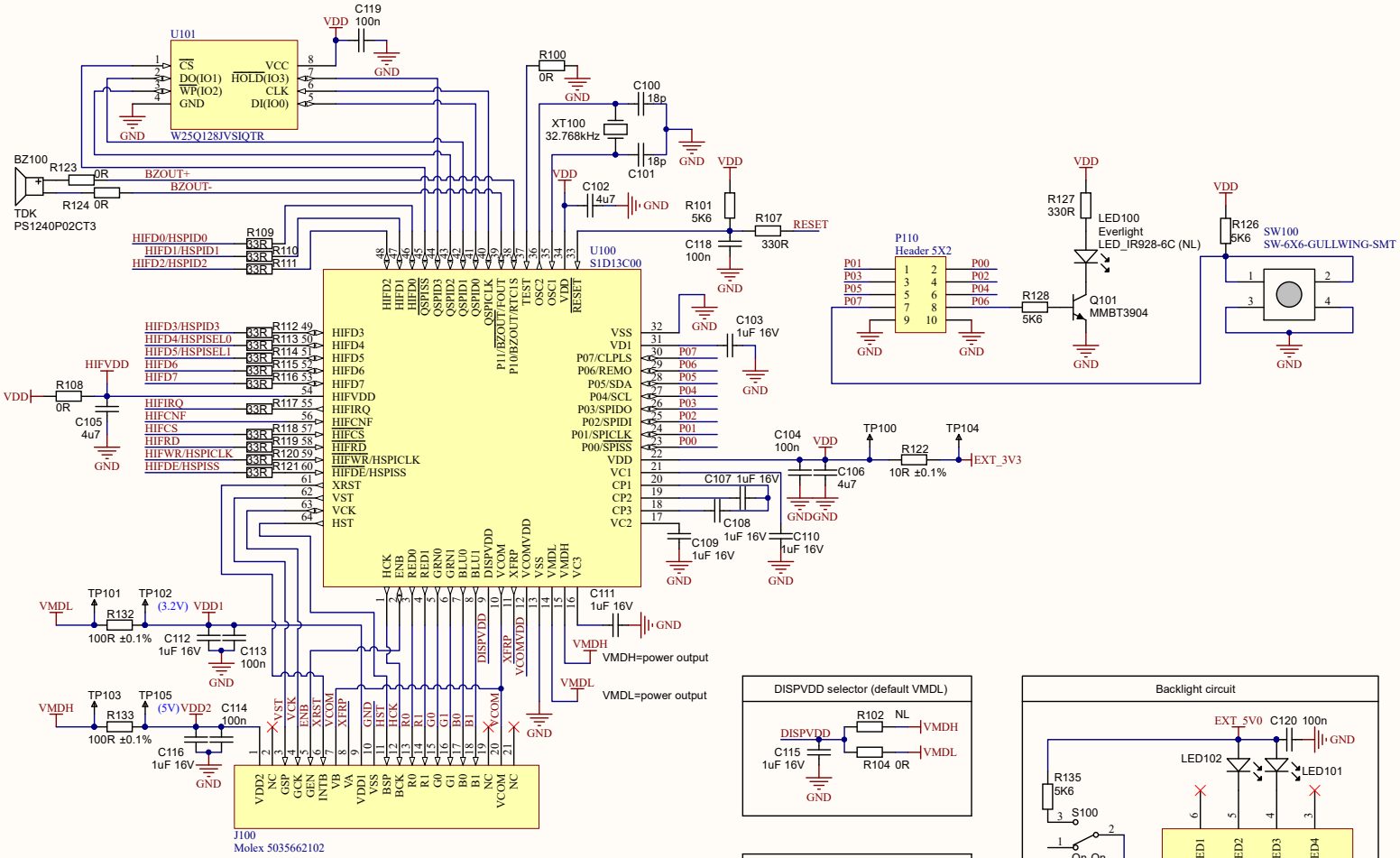

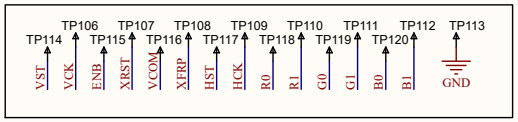

Test point array

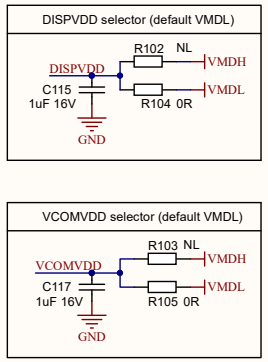

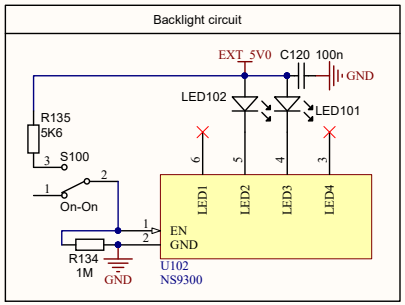

M100 FIDU
M101 FIDU

Title * LS021B7DD02 64-Color Memory LCD Evaluation Kit		
Size: A3	Number:*	Revision:*DTE202401
Date: 12/3/2024	Time: 18:53:19	Sheet* of *
File: C:\Projects\Sharp Singapore\AD\ColorMemoryLCD_6bit_EVK\LCD_64Color_Sharp_V2.SchDoc		