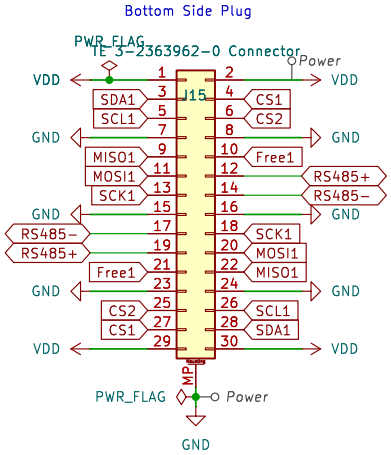

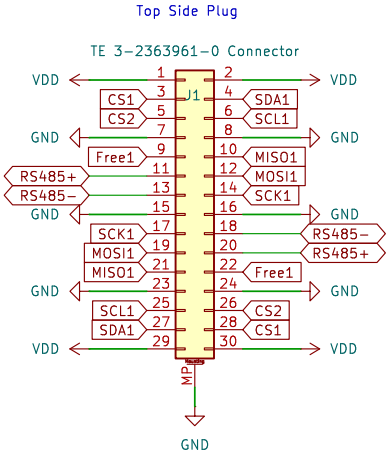

Author: Asher Edwards

Sheet: /
File: Verticale Sensor Spacer.kicad_sch

Title: 2.4mm sensor board spacer

Size: A4	Date: 2024-12-27	**Rev: V1**
KiCad E.D.A. 8.0.7		Id: 1/1