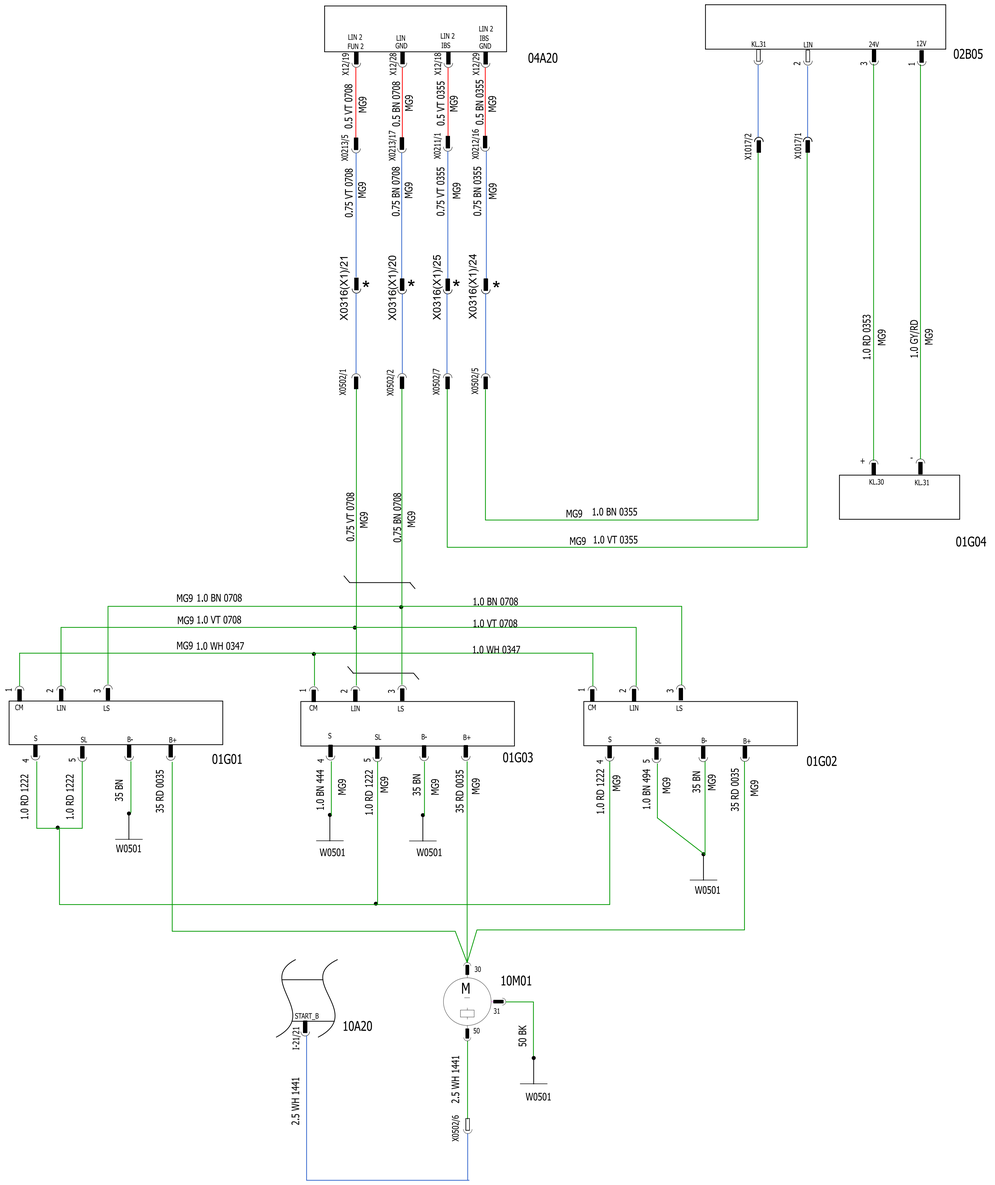

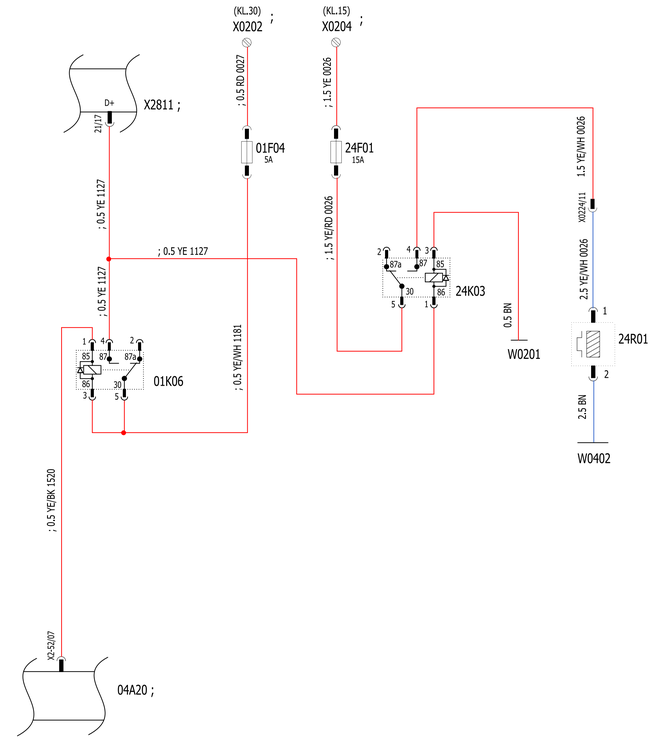

04A20	Advanced signal acquisition and actuation module (ASAM) control unit	W0201	Ground 1 main control panel
10A20	Engine management MCM control unit	W0501	Ground 1 engine compartment
02B05	Intelligent battery sensor	X0202	KL30 Main Distributor Electric Compartment
01F04	Fuse terminal D+	X0502	Alternator adapter connector
24F01	Compressed air-supply fuse	X2811	Electrical compartment chassis interface connector
01G01	Alternator 1 (main)		
01G02	Alternator 2		
01G03	Alternator 3 (A/C)		
01G04	Battery 1		
01K06	Relay D+		
24K03	Air drier relay		
10M01	Starter motor		
24R01	Compressed air drier heater		
13V07	Transmission oil temperature diode		
13V08	Transmission oil temperature diode		
13V09	Transmission malfunction diode		
Item	Description	Item	Description

CODE

MG9 - REDE DE INTERFASE LOCAL LIN

GB0 - CAMBIO AUTOMATICO ALLISON S2100

* Applicable only for Artic

	002	BAR2817N11	brclaro 23-06-07	siehe/see 23-06-07	siehe Smaragd
Aenderungsindex / Aenderungsbeschreibung state of revision / revision text	ZGS	Auftrags-Nr. order no.	Bearb./auth. Datum/date	Pruef./check Datum/date	Norm/stand Datum/date

Werkstoff (Endzustand) / material (fl.co.): Oberfl.sch./surf.prot. DBL

Farbe/color		Bearb./auth.	-
Dekor/decoration	MBN 31030	Pruef./check	-
Oberfl.ang./surf.texture	MBN 31007	Norm/stand.	-
Oberflaeche/surface (m^2)		Freig./rel.	see

Stammdaten/ masterdata: Smaragd

D-Pflicht/required		MBN 10317	VeDoc-Relevanz/relevance	MBN 10385
	Art/ type	Anzahl Merkmale/ number of features	Anzahl/number of VPD-Ident-Nr./no.	
DS	0	0	0	0
DZ	0	0		

ESD-Kennzeichen/code: A0598030 N

federf.Abt./resp.dep.: -

Allg. Toleranzen/gen. tolerances | gesetzl.Merkmal/st.ftr. | ZGS: - | Auftr.-Nr./order no.: -

Referenz-Nr./reference no. | Masse/mass (kg) | Benennung/title: STROML.PLAN ELECTROTECHN.CIRCUIT DIAGRAM GEN. LIN W/O EAM

Massstab/scale | System/system: NX 1953

Tolerierung/tolerancing

Letzter Aend-Index last state of revision

Mercedes-Benz

© Daimler Truck AG
Schutzvermerk DIN ISO 16016 beachten! / Refer to protection notice DIN ISO 16016!

Format/sz.: A0 | Blatt/sh. | Sach-Nr./basic number: A 384 546 09 00

Keine Aenderung ohne Zustimmung der federführenden Konstruktion. / Any alternations are subject to the approval of the design department.

1189x841