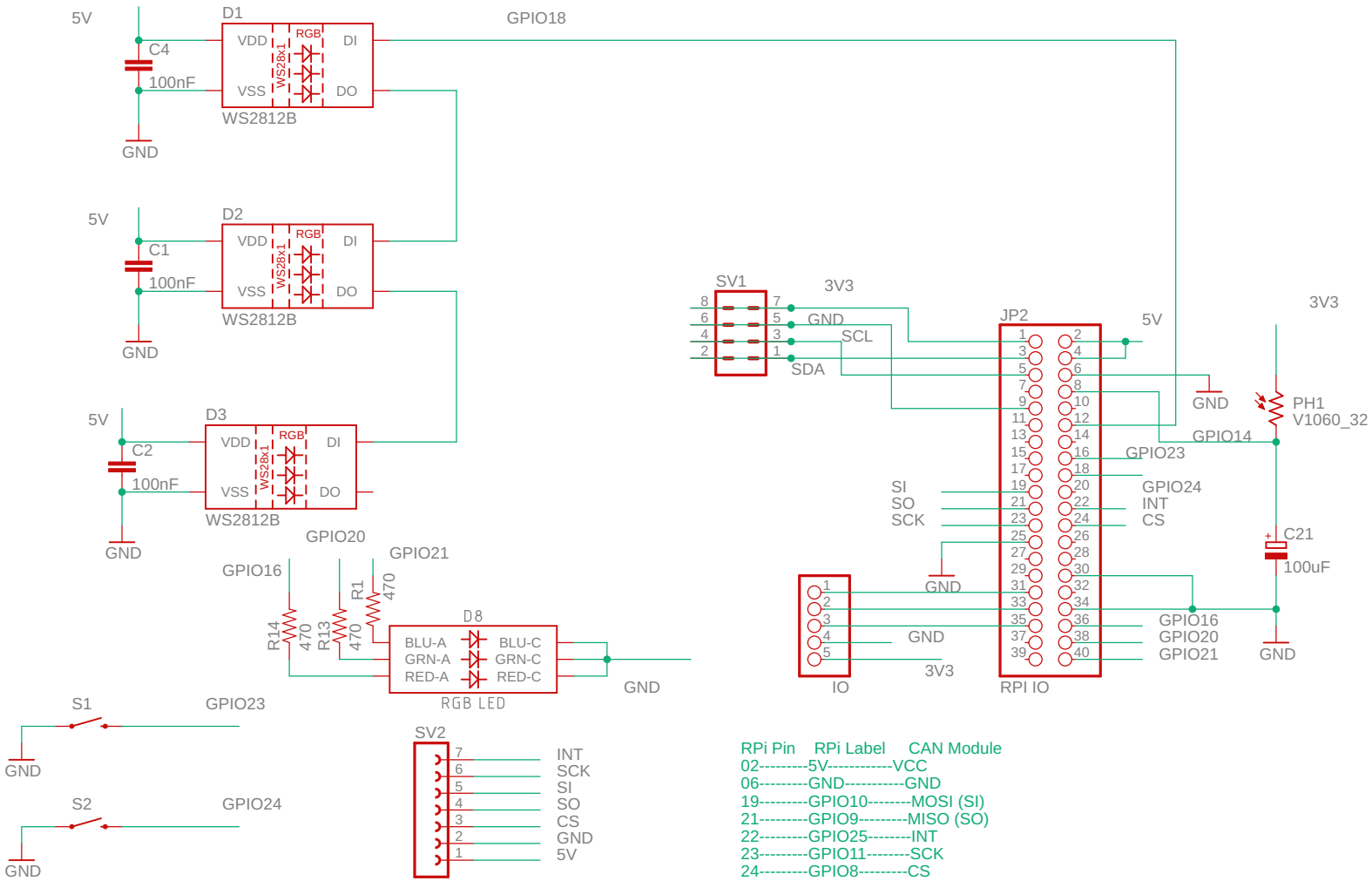

2019-04-27 09:24 C:\Users\par\OneDrive\Documents\GitHub\RaspiLabBoard\Eagle\RaspiLabBoard.sch (Sheet: 1/1)