PIC16F15213/14/23/24/43/44

PIC16F15213/14/23/24/43/44 Low Pin Count Microcontrollers

Introduction

The PIC16F152 microcontroller family has a suite of digital and analog peripherals that enable cost-sensitive sensor and real-time control applications. This product family is available from 8 to 44-pin packages in a memory range of 3.5 KB to 28 KB, with speeds up to 32 MHz. The family includes a 10-bit Analog-to-Digital Converter (ADC), Peripheral Pin Select (PPS), Memory Access Partition (MAP) to support users in data protection and bootloader applications, Device Information Area (DIA) that stores Fixed Voltage Reference (FVR) offset values to help improve ADC accuracy, digital communication peripherals, timers and waveform generators. This small form factor device is well suited for low-cost sensor and control applications.

PIC16F152 Family Types

Table 1. Devices Included in This Data Sheet

Device	Program Flash Memory (bytes)	Data SRAM (bytes)	Memory Access Partition/ Device Information Area	I/O Pins(1)/ Peripheral Pin Select	8-Bit Timers with HLT/ 16-Bit Timers(2)	10-Bit PWM/ CCP	10-Bit ADC Channels (External/Internal)	MSSP	EUSART	SMBus Compatible I/O Pads	External Interrupt Pins	Interrupt-on-Change Pins	Watchdog Timer
PIC16F15213	3.5k	256	Y/Y	6/Y	1/2	2/2	5/2	1	1	N	1	6	Y
PIC16F15214	7k	512	Y/Y	6/Y	1/2	2/2	5/2	1	1	N	1	6	Y
PIC16F15223	3.5k	256	Y/Y	12/Y	1/2	2/2	9/2	1	1	Y	1	12	Y
PIC16F15224	7k	512	Y/Y	12/Y	1/2	2/2	9/2	1	1	Y	1	12	Y
PIC16F15243	3.5k	256	Y/Y	18/Y	1/2	2/2	12/2	1	1	Y	1	18	Y
PIC16F15244	7k	512	Y/Y	18/Y	1/2	2/2	12/2	1	1	Y	1	18	Y

© 2020-2022 Microchip Technology Inc.
and its subsidiaries

Table 2. Devices Not Included in This Data Sheet

Device	Program Flash Memory (bytes)	Data SRAM (bytes)	Memory Access Partition/ Device Information Area	I/O Pins(1)/ Peripheral Pin Select	8-Bit Timers with HLT/ 16-Bit Timers(2)	10-Bit PWM/ CCP	10-Bit ADC Channels (External/Internal)	MSSP	EUSART	SMBus Compatible I/O Pads	External Interrupt Pins	Interrupt-on-Change Pins	Watchdog Timer
PIC16F15225	14k	1024	Y/Y	12/Y	1/2	2/2	9/2	1	1	Y	1	12	Y
PIC16F15245	14k	1024	Y/Y	18/Y	1/2	2/2	12/2	1	1	Y	1	18	Y
PIC16F15254	7k	512	Y/Y	26/Y	1/2	2/2	17/2	1	1	Y	1	25	Y
PIC16F15255	14k	1024	Y/Y	26/Y	1/2	2/2	17/2	1	1	Y	1	25	Y
PIC16F15256	28k	2048	Y/Y	26/Y	1/2	2/2	17/2	1	1	Y	1	25	Y
PIC16F15274	7k	512	Y/Y	36/Y	1/2	2/2	28/2	1	1	Y	1	25	Y
PIC16F15275	14k	1024	Y/Y	36/Y	1/2	2/2	28/2	1	1	Y	1	25	Y
PIC16F15276	28k	2048	Y/Y	36/Y	1/2	2/2	28/2	1	1	Y	1	25	Y

Notes:

1. Total I/O count includes one pin ($\overline{MCLR}$) that is input-only.
2. Timer0 can be configured as either an 8 or 16-bit timer.

Core Features

- C Compiler Optimized RISC Architecture
- Operating Speed:
  - DC – 32 MHz clock input
  - 125 ns minimum instruction time
- 16-Level Deep Hardware Stack
- Low-Current Power-on Reset (POR)
- Configurable Power-up Timer (PWRT)
- Brown-out Reset (BOR)
- Watchdog Timer (WDT)

Memory

- Up to 28 KB of Program Flash Memory
- Up to 2 KB of Data SRAM Memory
- Memory Access Partition (MAP): The Program Flash Memory Can Be Partitioned into:
  - Application Block
  - Boot Block
  - Storage Area Flash (SAF) Block
- Programmable Code Protection and Write Protection
- Device Information Area (DIA) Stores:
  - Fixed Voltage Reference (FVR) measurement data
  - Microchip Unique Identifier
- Device Characteristics Area (DCI) Stores:

  - Program/erase row sizes
  - Pin count details
- Direct, Indirect and Relative Addressing Modes

Operating Characteristics

- Operating Voltage Range:
  - 1.8V to 5.5V
- Temperature Range:
  - Industrial: -40°C to 85°C
  - Extended: -40°C to 125°C

Power-Saving Functionality

- Sleep:
  - Reduce device power consumption
  - Reduce system electrical noise while performing ADC conversions
- Low Power Mode Features:
  - Sleep:
    - < 900 nA typical @ 3V/25°C (WDT enabled)
    - < 600 nA typical @ 3V/25°C (WDT disabled)
  - Operating Current:
    - 48 µA typical @ 32 kHz, 3V/25°C
    - < 1 mA typical @ 4 MHz, 5V/25°C

Digital Peripherals

- Two Capture/Compare/PWM (CCP) Modules:
  - 16-bit resolution for Capture/Compare modes
  - 10-bit resolution for PWM mode
- Two Pulse-Width Modulators (PWM):
  - 10-bit resolution
  - Independent pulse outputs
- One Configurable 8/16-Bit Timer (TMR0)
- One 16-Bit Timer (TMR1) with Gate Control
- One 8-Bit Timer (TMR2) with Hardware Limit Timer (HLT)
- One Enhanced Universal Synchronous Asynchronous Receiver Transmitter (EUSART):
  - RS-232, RS-485, LIN compatible
  - Auto-wake-up on Start
- One Host Synchronous Serial Port (MSSP):
  - Serial Peripheral Interface (SPI) mode
    - Client Select Synchronization
  - Inter-Integrated Circuit (I^2C) mode
    - 7/10-bit Addressing modes
- Peripheral Pin Select (PPS):
  - Enables pin mapping of digital I/O
- Device I/O Port Features:
  - Up to 35 I/O pins
  - 1 input-only pin

© 2020-2022 Microchip Technology Inc.
and its subsidiaries

  - Individual I/O direction, open-drain, input threshold, slew rate and weak pull-up control
  - Interrupt-on-change (IOC) on up to 25 pins
  - One external interrupt pin

Analog Peripherals

- Analog-to-Digital Converter (ADC):
  - 10-bit resolution
  - Up to 28 external input channels
  - Two internal input channels
  - Internal ADC oscillator (ADCRC)
  - Operates in Sleep
  - Selectable auto-conversion trigger sources
- Fixed Voltage Reference (FVR):
  - Selectable 1.024V, 2.048V and 4.096V output levels
  - Internally connected to ADC

Clocking Structure

- High-Precision Internal Oscillator Block (HFINTOSC):
  - Selectable frequencies up to 32 MHz
  - ±2% at calibration
- Internal 31 kHz Oscillator (LFINTOSC)
- External High-Frequency Clock Input:
  - Two External Clock (EC) Power modes

Programming/Debug Features

- In-Circuit Serial Programming™ (ICSP™) via Two Pins
- In-Circuit Debug (ICD) with One Breakpoint via Two Pins
- Debug Integrated On-Chip

© 2020-2022 Microchip Technology Inc.
and its subsidiaries

Block Diagram

Figure 1. PIC16F15213/14/23/24/43/44 Block Diagram

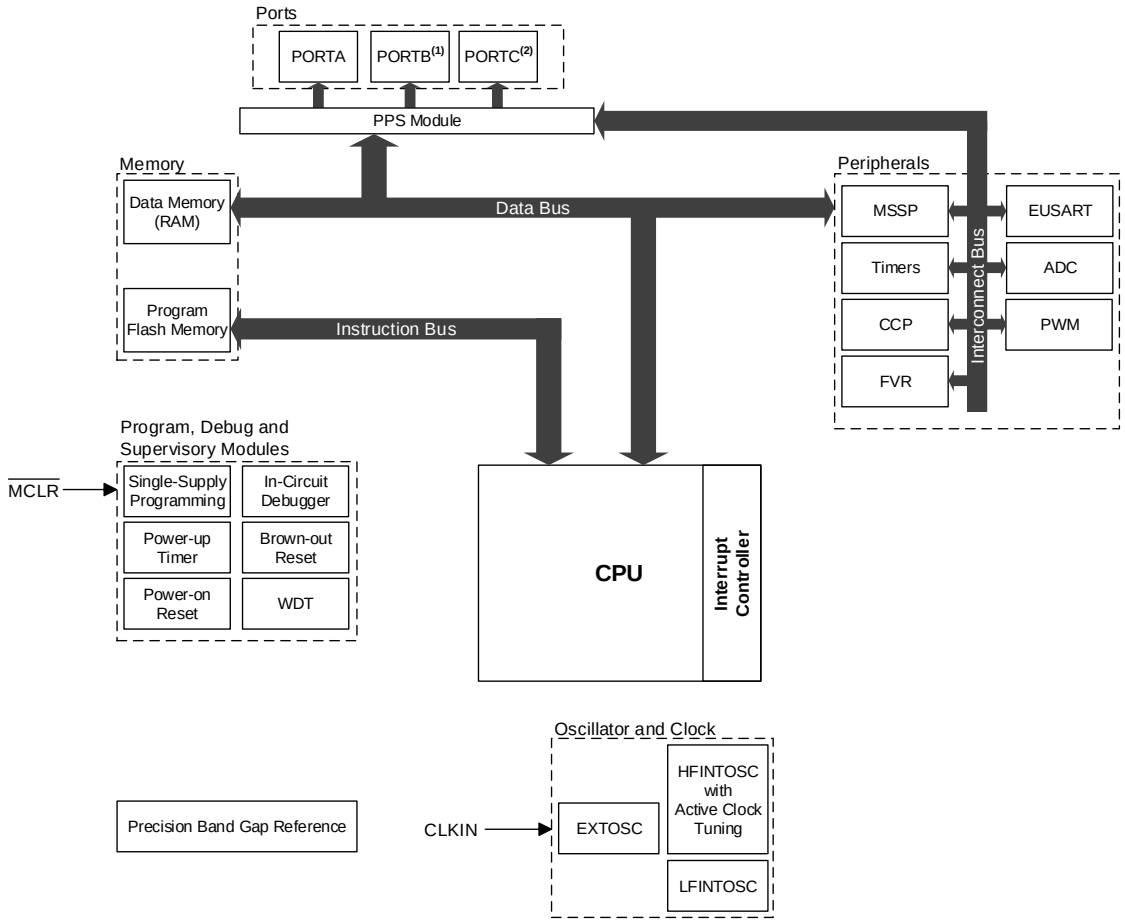

Notes:

1. Available on 20-pin devices only.
2. Available on 14/20-pin devices only.

Table of Contents

Introduction....1

PIC16F152 Family Types....1

Core Features....2

1. Packages....8

2. Pin Diagrams....9

3. Pin Allocation Tables....11

4. Guidelines for Getting Started with PIC16F152 Microcontrollers....14

5. Register and Bit Naming Conventions....17

6. Register Legend....19

7. Enhanced Mid-Range CPU....20

8. Device Configuration....22

9. Memory Organization....32

10. Resets....65

11. OSC - Oscillator Module....77

12. Interrupts....88

13. Sleep Mode....101

14. WDT - Watchdog Timer....103

15. NVM - Nonvolatile Memory Control....107

16. I/O Ports....126

17. IOC - Interrupt-on-Change....141

18. PPS - Peripheral Pin Select Module....147

19. TMR0 - Timer0 Module....155

20. TMR1 - Timer1 Module with Gate Control....163

21. TMR2 - Timer2 Module....178

22. CCP - Capture/Compare/PWM Module....199

23. PWM - Pulse-Width Modulation....212

24. EUSART - Enhanced Universal Synchronous Asynchronous Receiver Transmitter....220

25. MSSP - Host Synchronous Serial Port Module....249

26. FVR - Fixed Voltage Reference....310

© 2020-2022 Microchip Technology Inc.
and its subsidiaries

27. ADC - Analog-to-Digital Converter.....313
28. Charge Pump.....328
29. Instruction Set Summary.....331
30. ICSP™ - In-Circuit Serial Programming™.....351
31. Register Summary.....354
32. Electrical Specifications.....359
33. DC and AC Characteristics Graphs and Tables.....384
34. Packaging Information.....397
35. Appendix A: Revision History.....429
The Microchip Website.....430
Product Change Notification Service.....430
Customer Support.....430
Product Identification System.....431
Microchip Devices Code Protection Feature.....431
Legal Notice.....432
Trademarks.....432
Quality Management System.....433
Worldwide Sales and Service.....434

1. Packages

Table 1-1. Packages

Device	8-Pin PDIP	8-Pin SOIC	8-Pin DFN	14-Pin PDIP	14-Pin SOIC	14-Pin TSSOP	16-Pin QFN	20-Pin PDIP	20-Pin SOIC	20-Pin SSOP	20-Pin VQFN 3x3x0.9
PIC16F15213	•	•	•								
PIC16F15214	•	•	•								
PIC16F15223				•	•	•	•				
PIC16F15224				•	•	•	•				
PIC16F15243								•	•	•	•
PIC16F15244								•	•	•	•

2. Pin Diagrams

Figure 2-1. 8-Pin PDIP, SOIC, DFN

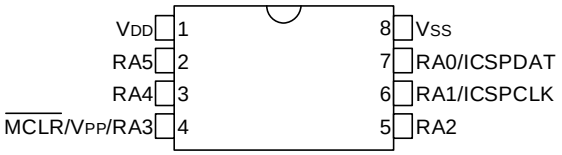

Figure 2-2. 14-Pin PDIP, SOIC, TSSOP

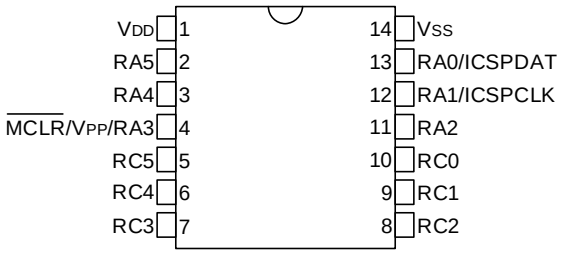

Figure 2-3. 16-Pin QFN

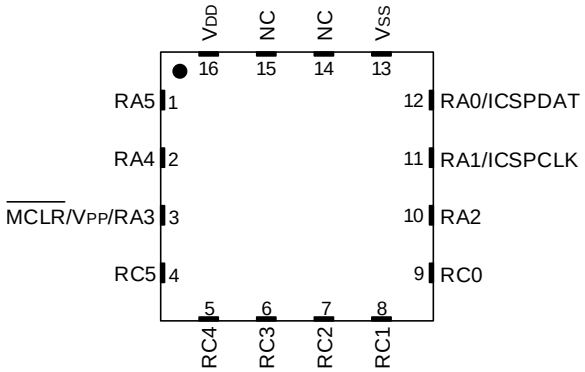

Note: It is recommended that the exposed bottom pad be connected to V_{SS}, however, it must not be the only V_{SS} connection to the device.

Figure 2-4. 20-Pin PDIP, SOIC, SSOP

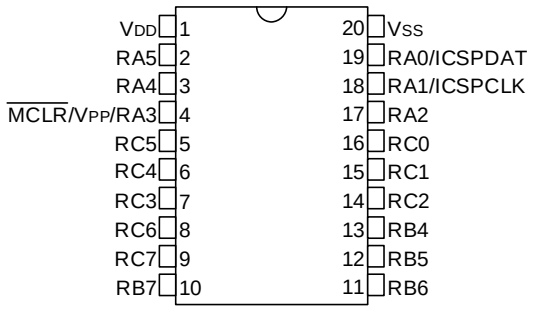

Figure 2-5. 20-Pin VQFN

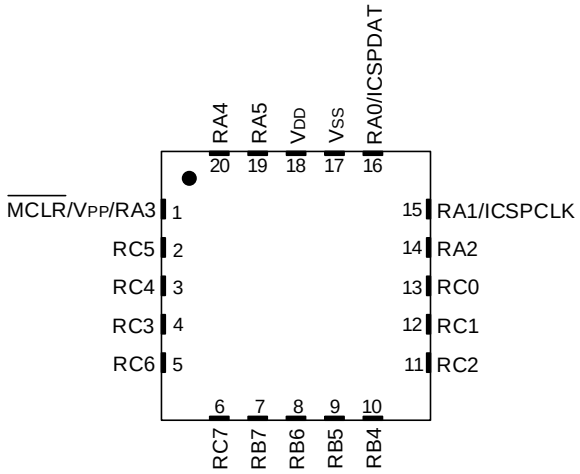

Note: It is recommended that the exposed bottom pad be connected to V_{SS}, however, it must not be the only V_{SS} connection to the device.

3. Pin Allocation Tables

Table 3-1. 8-Pin Allocation Table

I/O	8-Pin PDIP SOIC DFN	ADC	Reference	Timers	CCP	10-Bit PWM	MSSP	EUSART	IOC	Interrupt	Basic
RA0	7	ANA0	—	—	—	—	—	CK1(1,3)	IOCA0	—	ICSPDAT ICDDAT
RA1	6	ANA1	V_{REF}+ (ADC)	—	—	—	SCL1(1,3) SCK1(1,3)	RX1(1) DT1(1,3)	IOCA1	—	ICSPCLK ICDCLK
RA2	5	ANA2	—	T0CKI(1)	—	—	SDA1(1,3) SDI1(1,3)	—	IOCA2	INT(1)	—
RA3	4	—	—	—	—	—	$\overline{SS1}$(1)	—	IOCA3	—	$\overline{MCLR}$ V_{PP}
RA4	3	ANA4	—	T1G(1)	—	—	—	—	IOCA4	—	CLKOUT
RA5	2	ANA5 ADACT(1)	—	T1CKI(1) T2IN(1)	CCP1(1) CCP2(1)	—	—	—	IOCA5	—	CLKIN
V_{DD}	1	—	—	—	—	—	—	—	—	—	V_{DD}
V_{SS}	8	—	—	—	—	—	—	—	—	—	V_{SS}
OUT(2)	—	—	—	TMR0	CCP1 CCP2	PWM3 PWM4	SCL1 SCK1 SDA1 SDO1	TX1 DT1 CK1	—	—	—

Notes:

1. This is a PPS remappable input signal. The input function may be moved from the default location shown to any PORTx pin.
2. All output signals shown in this row are PPS remappable.
3. This is a bidirectional signal. For normal operation, user software must map this signal to the same pin via the PPS input and PPS output registers.

Table 3-2. 14/16-Pin Allocation Table

I/O	14-Pin PDIP SOIC TSSOP	16-Pin QFN	ADC	Reference	Timers	CCP	10-Bit PWM	MSSP	EUSART	IOC	Interrupt	Basic
RA0	13	12	ANA0	—	—	—	—	—	—	IOCA0	—	ICSPDAT ICDDAT
RA1	12	11	ANA1	V_{REF}+ (ADC)	—	—	—	—	—	IOCA1	—	ICSPCLK ICDCLK
RA2	11	10	ANA2	—	T0CKI(1)	—	—	—	—	IOCA2	INT(1)	—
RA3	4	3	—	—	—	—	—	—	—	IOCA3	—	$\overline{MCLR}$ V_{PP}
RA4	3	2	ANA4	—	T1G(1)	—	—	—	—	IOCA4	—	CLKOUT
RA5	2	1	ANA5	—	T1CKI(1) T2IN(1)	—	—	—	—	IOCA5	—	CLKIN
RC0	10	9	—	—	—	—	—	SCL1(1,3,4) SCK1(1,3,4)	—	IOCC0	—	—
RC1	9	8	—	—	—	—	—	SDA1(1,3,4) SDI1(1,3,4)	—	IOCC1	—	—
RC2	8	7	ANC2 ADACT(1)	—	—	—	—	—	—	IOCC2	—	—
RC3	7	6	ANC3	—	—	CCP2(1)	—	$\overline{SS1}$(1)	—	IOCC3	—	—
RC4	6	5	ANC4	—	—	—	—	—	CK1(1,3)	IOCC4	—	—

.....continued

I/O	14-Pin PDIP SOIC TSSOP	16-Pin QFN	ADC	Reference	Timers	CCP	10-Bit PWM	MSSP	EUSART	IOC	Interrupt	Basic
RC5	5	4	ANC5	—	—	CCP1(1)	—	—	RX1(1) DT1(1, 3)	IOCC5	—	—
V_{DD}	1	16	—	—	—	—	—	—	—	—	—	V_{DD}
V_{SS}	14	13	—	—	—	—	—	—	—	—	—	V_{SS}
OUT(2)	—	—	—	—	TMR0	CCP1 CCP2	PWM3 PWM4	SCL1 SCK1 SDA1 SDO1	TX1 DT1 CK1	—	—	—

Notes:

1. This is a PPS remappable input signal. The input function may be moved from the default location shown to any PORTx pin.
2. All output signals shown in this row are PPS remappable.
3. This is a bidirectional signal. For normal operation, user software must map this signal to the same pin via the PPS input and PPS output registers.
4. These pins can be configured for I^2C or SMBus logic levels via the Rxyl2C registers. The SCL1/SDA1 signals may be assigned to these pins for expected operation. PPS assignments of these signals to other pins will operate; however, the logic levels will be standard TTL/ST as selected by the INLVL register.

Table 3-3. 20-Pin Allocation Table

I/O	20-Pin PDIP SOIC SSOP	20-Pin VQFN	ADC	Reference	Timers	CCP	10-Bit PWM	MSSP	EUSART	IOC	Interrupt	Basic
RA0	19	16	ANA0	—	—	—	—	—	—	IOCA0	—	ICSPDAT ICDDAT
RA1	18	15	ANA1	V_{REF}+ (ADC)	—	—	—	—	—	IOCA1	—	ICSPCLK ICDCLK
RA2	17	14	ANA2	—	T0CKI(1)	—	—	—	—	IOCA2	INT(1)	—
RA3	4	1	—	—	—	—	—	—	—	IOCA3	—	$\overline{MCLR}$ V_{PP}
RA4	3	20	ANA4	—	T1G(1)	—	—	—	—	IOCA4	—	CLKOUT
RA5	2	19	ANA5	—	T1CKI(1) T2IN(1)	—	—	—	—	IOCA5	—	CLKIN
RB4	13	10	—	—	—	—	—	SCL1(1,3,4) SCK1(1,3,4)	—	IOCB4	—	—
RB5	12	9	ANB5	—	—	—	—	—	RX1(1) DT1(1,3)	IOCB5	—	—
RB6	11	8	ANB6	—	—	—	—	SDA1(1,3,4) SDI1(1,3,4)	—	IOCB6	—	—
RB7	10	7	ANB7	—	—	—	—	—	CK1(1,3)	IOCB7	—	—
RC0	16	13	—	—	—	—	—	—	—	IOCC0	—	—
RC1	15	12	—	—	—	—	—	—	—	IOCC1	—	—
RC2	14	11	ANC2 ADACT(1)	—	—	—	—	—	—	IOCC2	—	—
RC3	7	4	ANC3	—	—	CCP2(1)	—	—	—	IOCC3	—	—
RC4	6	3	ANC4	—	—	—	—	—	—	IOCC4	—	—
RC5	5	2	ANC5	—	—	CCP1(1)	—	—	—	IOCC5	—	—
RC6	8	5	—	—	—	—	—	$\overline{SS1}$(1)	—	IOCC6	—	—
RC7	9	6	—	—	—	—	—	—	—	IOCC7	—	—

.....continued

I/O	20-Pin PDIP SOIC SSOP	20-Pin VQFN	ADC	Reference	Timers	CCP	10-Bit PWM	MSSP	EUSART	IOC	Interrupt	Basic
V_{DD}	1	18	—	—	—	—	—	—	—	—	—	V_{DD}
V_{SS}	20	17	—	—	—	—	—	—	—	—	—	V_{SS}
OUT(2)	—	—	—	—	TMR0	CCP1 CCP2	PWM3 PWM4	SCL1 SCK1 SDA1 SDO1	TX1 DT1 CK1	—	—	—

Notes:

1. This is a PPS remappable input signal. The input function may be moved from the default location shown to any PORTx pin.
2. All output signals shown in this row are PPS remappable.
3. This is a bidirectional signal. For normal operation, user software must map this signal to the same pin via the PPS input and PPS output registers.
4. These pins can be configured for I^2C or SMBus logic levels via the RxyI2C registers. The SCL1/SDA1 signals may be assigned to these pins for expected operation. PPS assignments of these signals to other pins will operate; however, the logic levels will be standard TTL/ST as selected by the INLVL register.

4. Guidelines for Getting Started with PIC16F152 Microcontrollers

4.1 Basic Connection Requirements

Getting started with the PIC16F152 family of 8-bit microcontrollers requires attention to a minimal set of device pin connections before proceeding with development.

The following pins must always be connected:

- All V_{DD} and V_{SS} pins (see 4.2. Power Supply Pins)
- $\overline{MCLR}$ pin (see 4.3. Master Clear (MCLR) Pin)

These pins must also be connected if they are being used in the end application:

- PGC/PGD pins used for In-Circuit Serial Programming™ (ICSP™) and debugging purposes (see 4.4. In-Circuit Serial Programming (ICSP) Pins)
- CLKIN pin when an external clock source is used.

Additionally, the following may be required:

- V_{REF}+/V_{REF}- pins are used when external voltage reference for analog modules is implemented

The minimum recommended connections are shown in the figure below.

Figure 4-1. Minimum Recommended Connections

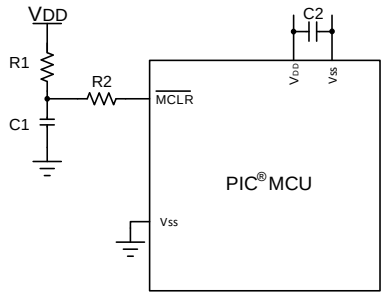

Key (all values are recommendations):
C1: 10 nF, 16V ceramic
C2: 0.1 µF, 16V ceramic
R1: 10 kΩ
R2: 100Ω to 470Ω

4.2 Power Supply Pins

4.2.1 Decoupling Capacitors

The use of decoupling capacitors on every pair of power supply pins (V_{DD} and V_{SS}) is required.

Consider the following criteria when using decoupling capacitors:

- Value and type of capacitor: A 0.1 µF (100 nF), 10-25V capacitor is recommended. The capacitor may be a low-ESR device, with a resonance frequency in the range of 200 MHz and higher. Ceramic capacitors are recommended.
- Placement on the printed circuit board: The decoupling capacitors may be placed as close to the pins as possible. It is recommended to place the capacitors on the same side of the board as the device. If space is constricted, the capacitor can be placed on another layer on the PCB using a via; however, ensure that the trace length from the pin to the capacitor is no greater than 0.25 inch (6 mm).

- Handling high-frequency noise: If the board is experiencing high-frequency noise (upward of tens of MHz), add a second ceramic type capacitor in parallel to the above described decoupling capacitor. The value of the second capacitor can be in the range of 0.01 µF to 0.001 µF. Place this second capacitor next to each primary decoupling capacitor. In high-speed circuit designs, consider implementing a decade pair of capacitances as close to the power and ground pins as possible (e.g., 0.1 µF in parallel with 0.001 µF).
- Maximizing performance: On the board layout from the power supply circuit, run the power and return traces to the decoupling capacitors first, and then to the device pins. This ensures that the decoupling capacitors are first in the power chain. Equally important is to keep the trace length between the capacitor and the power pins to a minimum, thereby reducing PCB trace inductance.

4.2.2 Tank Capacitors

With on boards with power traces running longer than six inches in length, it is suggested to use a tank capacitor for integrated circuits, including microcontrollers, to supply a local power source. The value of the tank capacitor may be determined based on the trace resistance that connects the power supply source to the device, and the maximum current drawn by the device in the application. In other words, select the tank capacitor that meets the acceptable voltage sag at the device. Typical values range from 4.7 µF to 47 µF.

4.3 Master Clear ($\overline{MCLR}$) Pin

The $\overline{MCLR}$ pin provides two specific device functions: Device Reset, and device programming and debugging. If programming and debugging are not required in the end application, a direct connection to V_{DD} may be all that is required. The addition of other components, to help increase the application's resistance to spurious Resets from voltage sags, may be beneficial. A typical configuration is shown in Figure 4-1. Other circuit designs may be implemented, depending on the application's requirements.

During programming and debugging, the resistance and capacitance that can be added to the pin must be considered. Device programmers and debuggers drive the $\overline{MCLR}$ pin. Consequently, specific voltage levels (V_{IH} and V_{IL}) and fast signal transitions must not be adversely affected. Therefore, specific values of R1 and C1 will need to be adjusted based on the application and PCB requirements. For example, it is recommended that the capacitor, C1, be isolated from the $\overline{MCLR}$ pin during programming and debugging operations by using a jumper (Figure 4-2). The jumper is replaced for normal run-time operations.

Any components associated with the $\overline{MCLR}$ pin may be placed within 0.25 inch (6 mm) of the pin.

Figure 4-2. Example of $\overline{MCLR}$ Pin Connections

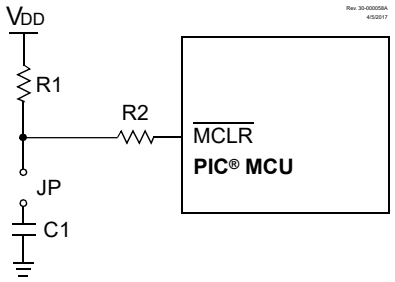

Notes:

1. R1 ≤ 10 kΩ is recommended. A suggested starting value is 10 kΩ. Ensure that the $\overline{MCLR}$ pin V_{IH} and V_{IL} specifications are met.
2. R2 ≤ 470Ω will limit any current flowing into $\overline{MCLR}$ from the extended capacitor, C1, in the event of $\overline{MCLR}$ pin breakdown, due to Electrostatic Discharge (ESD) or Electrical Overstress (EOS). Ensure that the $\overline{MCLR}$ pin V_{IH} and V_{IL} specifications are met.

4.4 In-Circuit Serial Programming™ (ICSP™) Pins

The ICSPCLK and ICSPDAT pins are used for ICSP and debugging purposes. It is recommended to keep the trace length between the ICSP connector and the ICSP pins on the device as short as possible. If the ICSP connector is expected to experience an ESD event, a series resistor is recommended, with the value in the range of a few tens of ohms, not to exceed 100Ω.

Pull-up resistors, series diodes and capacitors on the ICSPCLK and ICSPDAT pins are not recommended as they can interfere with the programmer/debugger communications to the device. If such discrete components are an application requirement, they may be removed from the circuit during programming and debugging. Alternatively, refer to the AC/DC characteristics and timing requirements information in the respective device Flash programming specification for information on capacitive loading limits, and pin input voltage high (V_{IH}) and input low (V_{IL}) requirements.

For device emulation, ensure that the Communication Channel Select (i.e., ICSPCLK/ICSPDAT pins), programmed into the device, matches the physical connections for the ICSP to the Microchip debugger/emulator tool.

4.5 Unused I/Os

Unused I/O pins may be configured as outputs and driven to a Logic Low state. Alternatively, connect a 1 kΩ to 10 kΩ resistor to V_{SS} on unused pins to drive the output to Logic Low.

5. Register and Bit Naming Conventions

5.1 Register Names

When there are multiple instances of the same peripheral in a device, the Peripheral Control registers will be depicted as the concatenation of a peripheral identifier, peripheral instance, and control identifier. The Control registers section will show just one instance of all the register names with an ‘x’ in the place of the peripheral instance number. This naming convention may also be applied to peripherals when there is only one instance of that peripheral in the device to maintain compatibility with other devices in the family that contain more than one.

5.2 Bit Names

There are two variants for bit names:

- Short name: Bit function abbreviation
- Long name: Peripheral abbreviation + short name

5.2.1 Short Bit Names

Short bit names are an abbreviation for the bit function. For example, some peripherals are enabled with the EN bit. The bit names shown in the registers are the short name variant.

Short bit names are useful when accessing bits in C programs. The general format for accessing bits by the short name is RegisterNamebits.ShortName. For example, the enable bit, ON, in the ADCON0 register can be set in C programs with the instruction `ADCON0bits.ON = 1`.

Short names are not useful in assembly programs because the same name may be used by different peripherals in different bit positions. When it occurs, during the include file generation, the short bit name instances are appended with an underscore plus the name of the register where the bit resides, to avoid naming contentions.

5.2.2 Long Bit Names

Long bit names are constructed by adding a peripheral abbreviation prefix to the short name. The prefix is unique to the peripheral, thereby making every long bit name unique. The long bit name for the ADC enable bit is the ADC prefix, AD, appended with the enable bit short name, ON, resulting in the unique bit name ADON.

Long bit names are useful in both C and assembly programs. For example, in C the ADCON0 enable bit can be set with the `ADON = 1` instruction. In assembly, this bit can be set with the `BSF ADCON0,ADON` instruction.

5.2.3 Bit Fields

Bit fields are two or more adjacent bits in the same register. Bit fields adhere only to the short bit naming convention. For example, the three Least Significant bits of the ADCON2 register contain the ADC Operating Mode Selection bit. The short name for this field is MD and the long name is ADMD. Bit field access is only possible in C programs. The following example demonstrates a C program instruction for setting the ADC to operate in Accumulate mode:

```
ADCON2bits.MD = 0b001;
```

Individual bits in a bit field can also be accessed with long and short bit names. Each bit is the field name appended with the number of the bit position within the field. For example, the Most Significant MODE bit has the short bit name MD2 and the long bit name is ADMD2. The following two examples demonstrate assembly program sequences for setting the ADC to operate in Accumulate mode:

```
MOVLW  ~(1<<MD2 | 1<<MD1)
ANDWF  ADCON2,F
MOVLW  1<<MD0
IORWF  ADCON2,F
```

```
BCF     ADCON2,ADMD2
BCF     ADCON2,ADMD1
BSF     ADCON2,ADMD0
```

5.3 Register and Bit Naming Exceptions

5.3.1 Status, Interrupt and Mirror Bits

Status, Interrupt enables, Interrupt flags and Mirror bits are contained in registers that span more than one peripheral. In these cases, the bit name shown is unique so there is no prefix or short name variant.

6. Register Legend

Table 6-1. Register Legend

Symbol	Definition
R	Readable bit
W	Writable bit
HS	Hardware settable bit
HC	Hardware clearable bit
S	Set only bit
C	Clear only bit
U	Unimplemented bit, read as ‘0’
‘1’	Bit value is set
‘0’	Bit value is cleared
x	Bit value is unknown
u	Bit value is unchanged
q	Bit value depends on condition
m	Bit value is predefined

7. Enhanced Mid-Range CPU

This family of devices contains an enhanced mid-range 8-bit CPU core. The CPU has 50 instructions. Interrupt capability includes automatic context saving. The hardware stack is 16-level deep and has overflow and underflow Reset capability. Direct, Indirect, and Relative Addressing modes are available. Two File Select Registers (FSR) provide the ability to read program and data memory.

Figure 7-1. Core Data Path Diagram

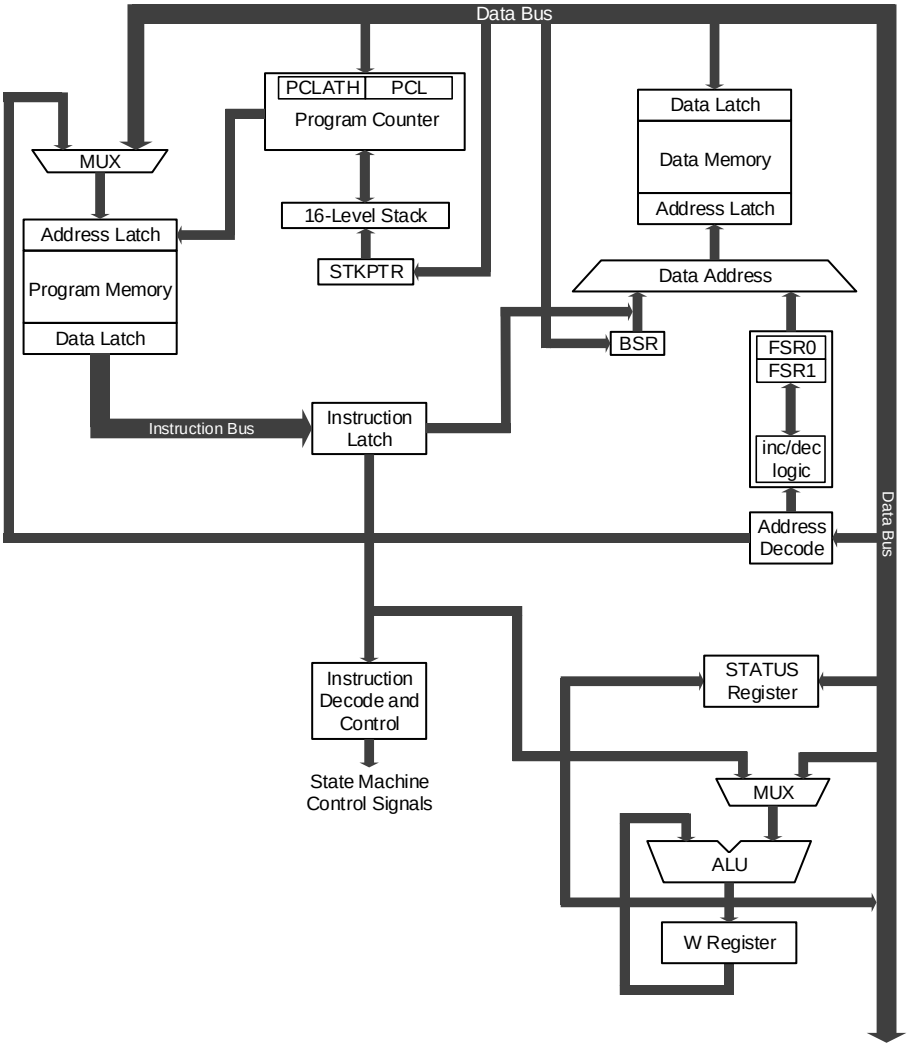

7.1 Automatic Interrupt Context Saving

During interrupts, certain registers are automatically saved in shadow registers and restored when returning from the interrupt. This saves stack space and user code.

7.2 16-Level Stack with Overflow and Underflow

These devices have a hardware stack memory 15 bits wide and 16 words deep. A Stack Overflow or Underflow will set the appropriate bit (STKOVF or STKUNF), and if enabled, will cause a software Reset.

7.3 File Select Registers

There are two 16-bit File Select Registers (FSR). FSRs can access all file registers and program memory, which allows one Data Pointer for all memory. When an FSR points to program memory, there is one additional instruction cycle in instructions using INDF to allow the data to be fetched. General purpose memory can also be addressed linearly, providing the ability to access contiguous data larger than 80 bytes.

7.4 Instruction Set

There are 50 instructions for the enhanced mid-range CPU to support the features of the CPU. See the **"Instruction Set Summary"** section for more details.

8. Device Configuration

Device configuration consists of the Configuration Words, User ID, Device ID, Device Information Area (DIA) and the Device Configuration Information (DCI) regions.

8.1 Configuration Words

There are five Configuration Words that allow the user to select the device oscillator, Reset and memory protection options. These are implemented at addresses 0x8007 - 0x800B.

Note: The DEBUG bit in the Configuration Words is managed automatically by device development tools, including debuggers and programmers. For normal device operation, this bit needs to be maintained as a '1'.

8.2 Code Protection

Code protection allows the device to be protected from unauthorized access. Internal access to the program memory is unaffected by any code protection setting.

The entire program memory space is protected from external reads and writes by the $\overline{CP}$ bit. When $\overline{CP}$ = 0, external reads and writes of program memory are inhibited and a read will return all '0's. The CPU can continue to read program memory, regardless of the protection bit settings. Self-writing the program memory is dependent upon the write-protection setting.

8.3 Write Protection

Write protection allows the device to be protected from unintended self-writes. Applications, such as bootloader software, can be protected while allowing other regions of the program memory to be modified.

The $\overline{WRTn}$ Configuration bits determine which of the program memory blocks are protected.

8.4 User ID

Four words in the memory space (8000h-8003h) are designated as ID locations where the user can store checksum or other code identification numbers. These locations are readable and writable during normal execution. See the **"NVMREG Access to DIA, DCI, User ID, DEV/REV ID, and Configuration Words"** section for more information on accessing these memory locations. See the **"Memory Programming Specification"** section in the **"Electrical Specifications"** chapter for information on the electrical parameters required to program these memory locations. For more information on checksum calculation, see the **"Family Programming Specification"**.

8.5 Device ID and Revision ID

The 14-bit Device ID word is located at address 8006h and the 14-bit Revision ID is located at 8005h. These locations are read-only and cannot be erased or modified.

Development tools, such as device programmers and debuggers, may be used to read the Device ID, Revision ID and Configuration Words. Refer to the "**NVM - Nonvolatile Memory Control**" section for more information on accessing these locations.

8.6 Register Definitions: Configuration Settings

8.6.1 CONFIG1

Name: CONFIG1
Offset: 0x8007

Configuration Word 1

Bit	15	14	13	12	11	10	9	8
				VDDAR				$\overline{\text{CLKOUTEN}}$
Access				R/W				R/W
Reset				1				1

Bit	7	6	5	4	3	2	1	0
			RSTOSC[1:0]				FEXTOSC[1:0]	
Access			R/W	R/W			R/W	R/W
Reset			1	1			1	1

Bit 12 – VDDAR V_{DD} Analog Range Calibration Selection

Value	Description
1	Internal analog systems are calibrated for operation between V_{DD} = 2.3V - 5.5V
0	Internal analog systems are calibrated for operation between V_{DD} = 1.8V - 3.6V

Bit 8 – $\overline{\text{CLKOUTEN}}$ Clock Out Enable

Value	Description
1	CLKOUT function is disabled; I/O function on CLKOUT pin
0	CLKOUT function is enabled; F_{OSC}/4 clock appears on CLKOUT pin

Bits 5:4 – RSTOSC[1:0] Power-up Default Value for COSC bits
Selects the oscillator source used by user software. Refer to COSC operation.

Value	Description
11	EXTOSC operating per the FEXTOSC bits
10	HFINTOSC with FRQ = 1 MHz
01	LFINTOSC
00	HFINTOSC with FRQ = 32 MHz

Bits 1:0 – FEXTOSC[1:0] External Oscillator Mode Selection

Value	Description
11	ECH (16 MHz and higher)
10	ECL (below 16 MHz)
01	Oscillator not enabled
00	Reserved

8.6.2 CONFIG2

Name: CONFIG2
Offset: 0x8008

Configuration Word 2

Bit	15	14	13	12	11	10	9	8
			$\overline{\text{DEBUG}}$	STVREN	PPS1WAY		BORV	
Access			R/W	R/W	R/W		R/W	
Reset			1	1	1		1	

Bit	7	6	5	4	3	2	1	0
	BOREN[1:0]			WDTE[1:0]		PWRTS[1:0]		MCLRE
Access	R/W	R/W		R/W	R/W	R/W	R/W	R/W
Reset	1	1		1	1	1	1	1

Bit 13 – $\overline{\text{DEBUG}}$ Debugger Enable[1]

Value	Description
1	Background debugger disabled
0	Background debugger enabled

Bit 12 – STVREN Stack Overflow/Underflow Reset Enable

Value	Description
1	Stack Overflow or Underflow will cause a Reset
0	Stack Overflow or Underflow will not cause a Reset

Bit 11 – PPS1WAY PPSLOCKED One-Way Set Enable

Value	Description
1	The PPSLOCKED bit can only be set once after an unlocking sequence is executed; once PPSLOCKED is set, all future changes to PPS registers are prevented
0	The PPSLOCKED bit can be set and cleared as needed (unlocking sequence is required)

Bit 9 – BORV Brown-out Reset (BOR) Voltage Selection[2]

Value	Description
1	Brown-out Reset voltage (V_{BOR}) set to 1.9V
0	Brown-out Reset voltage (V_{BOR}) set to 2.85V

Bits 7:6 – BOREN[1:0] Brown-out Reset (BOR) Enable[3]

Value	Description
11	Brown-out Reset enabled, the SBOREN bit is ignored
10	Brown-out Reset enabled while running, disabled in Sleep; the SBOREN bit is ignored
01	Brown-out Reset enabled according to SBOREN
00	Brown-out Reset disabled

Bits 4:3 – WDTE[1:0] Watchdog Timer (WDT) Enable

Value	Description
11	WDT enabled regardless of Sleep; the SEN bit of WDTCON is ignored
10	WDT enabled while Sleep = 0, suspended when Sleep = 1; the SEN bit of WDTCON is ignored
01	WDT enabled/disabled by the SEN bit of WDTCON
00	WDT disabled, the SEN bit of WDTCON is ignored

Bits 2:1 – PWRTS[1:0] Power-Up Timer (PWRT) Selection

Value	Description
11	PWRT disabled
10	PWRT is set at 64 ms

Value	Description
01	PWRT is set at 16 ms
00	PWRT is set at 1 ms

Bit 0 – MCLRE Master Clear ($\overline{MCLR}$) Enable

Value	Condition	Description
x	If LVP = 1	$\overline{MCLR}$ pin is $\overline{MCLR}$
1	If LVP = 0	$\overline{MCLR}$ pin is $\overline{MCLR}$
0	If LVP = 0	$\overline{MCLR}$ pin function is port-defined function

Notes:

1. The $\overline{DEBUG}$ bit is managed automatically by device development tools including debuggers and programmers. For normal device operation, this bit needs to be maintained as a '1'.
2. The higher voltage selection is recommended for operation at or above 16 MHz.
3. When enabled, Brown-out Reset voltage (V_{BOR}) is set by the BORV bit.

8.6.3 CONFIG3

Name: CONFIG3
Offset: 0x8009

Configuration Word 3

Note: This register is reserved.

Bit	15	14	13	12	11	10	9	8
Access								
Reset								

Bit	7	6	5	4	3	2	1	0
Access								
Reset								

8.6.4 CONFIG4

Name: CONFIG4
Offset: 0x800A

Configuration Word 4

Bit	15	14	13	12	11	10	9	8
			LVP		$\overline{\text{WRTSAF}}$		$\overline{\text{WRTC}}$	$\overline{\text{WRTB}}$
Access			R/W		R/W		R/W	R/W
Reset			1		1		1	1

Bit	7	6	5	4	3	2	1	0
	$\overline{\text{WRTAPP}}$			$\overline{\text{SAFEN}}$	$\overline{\text{BBEN}}$	BBSIZE[2:0]		
Access	R/W			R/W	R/W	R/W	R/W	R/W
Reset	1			1	1	1	1	1

Bit 13 – LVP Low-Voltage Programming Enable[1]

Value	Description
1	Low-Voltage Programming is enabled. $\overline{\text{MCLR}}$/V_{PP} pin function is $\overline{\text{MCLR}}$. The MCLRE bit is ignored.
0	High voltage (HV) on $\overline{\text{MCLR}}$/V_{PP} must be used for programming

Bit 11 – $\overline{\text{WRTSAF}}$ Storage Area Flash (SAF) Write Protection[2,3]

Value	Description
1	SAF is not write-protected
0	SAF is write-protected

Bit 9 – $\overline{\text{WRTC}}$ Configuration Registers Write Protection[2]

Value	Description
1	Configuration registers are not write-protected
0	Configuration registers are write-protected

Bit 8 – $\overline{\text{WRTB}}$ Boot Block Write Protection[2,4]

Value	Description
1	Boot Block is not write-protected
0	Boot Block is write-protected

Bit 7 – $\overline{\text{WRTAPP}}$ Application Block Write Protection[2]

Value	Description
1	Application Block is not write-protected
0	Application Block is write-protected

Bit 4 – $\overline{\text{SAFEN}}$ Storage Area Flash (SAF) Enable[2]

Value	Description
1	SAF is disabled
0	SAF is enabled

Bit 3 – $\overline{\text{BBEN}}$ Boot Block Enable[2]

Value	Description
1	Boot Block is disabled
0	Boot Block is enabled

Bits 2:0 – BBSIZE[2:0] Boot Block Size Selection[5,6]

Table 8-1. Boot Block Size

$\overline{\text{BBEN}}$	BBSIZE	End Address of Boot Block	Boot Block Size (words)	
			PIC16F15213 PIC16F15223 PIC16F15243	PIC16F15214 PIC16F15224 PIC16F15244
1	xxx	–	–	
0	111	01FFh	512	
0	110	03FFh	1024	
0	101	07FFh	–[6]	2048
0	100	0FFFh	–[6]	
0	011	1FFFh	–[6]	
0	010	3FFFh	–[6]	
0	001	3FFFh	–[6]	
0	000	3FFFh	–[6]	

Notes:

1. The LVP bit cannot be written (to zero) while operating from the LVP programming interface. The purpose of this rule is to prevent the user from dropping out of LVP mode while programming from LVP mode, or accidentally eliminating LVP mode from the Configuration state.
2. Once protection is enabled through ICSP or a self-write, it can only be reset through a Bulk Erase.
3. Applicable only if $\overline{\text{SAFEN}}$ = 0.
4. Applicable only if $\overline{\text{BBEN}}$ = 0.
5. The BBSIZE[2:0] bits can only be changed when $\overline{\text{BBEN}}$ = 1. Once $\overline{\text{BBEN}}$ = 0, BBSIZE[2:0] can only be changed through a Bulk Erase.
6. The maximum Boot Block size is half of the user program memory size. Any selection that will exceed the half of a device's program memory will default to a maximum Boot Block size of half PFM. For example, all settings of BBSIZE from '110' to '000' for a PIC16F15213 (Max PFM = 2048 words) will result in a maximum Boot Block size of 1024 words.

8.6.5 CONFIG5

Name: CONFIG5
Offset: 0x800B

Configuration Word 5[1]

Bit	15	14	13	12	11	10	9	8
Access								
Reset								

Bit	7	6	5	4	3	2	1	0
								$\overline{CP}$
Access								R/W
Reset								1

Bit 0 – $\overline{CP}$ User Program Flash Memory (PFM) Code Protection[2]

Value	Description
1	User PFM code protection is disabled
0	User PFM code protection is enabled

Notes:

1. Since device code protection takes effect immediately, this Configuration Word needs to be written last.
2. Once code protection is enabled it can only be removed through a Bulk Erase.

8.7 Register Definitions: Device ID and Revision ID

8.7.1 Device ID

Name: DEVICEID
Offset: 0x8006

Device ID Register

Bit	15	14	13	12	11	10	9	8
			Reserved	Reserved	DEV[11:8]			
Access			R	R	R	R	R	R
Reset			1	1	q	q	q	q

Bit	7	6	5	4	3	2	1	0
	DEV[7:0]							
Access	R	R	R	R	R	R	R	R
Reset	q	q	q	q	q	q	q	q

Bit 13 – Reserved Reserved - Read as ‘1’

Bit 12 – Reserved Reserved - Read as ‘1’

Bits 11:0 – DEV[11:0] Device ID

Device	Device ID
PIC16F15213	30E3h
PIC16F15214	30E6h
PIC16F15223	30E4h
PIC16F15224	30E7h
PIC16F15243	30E5h
PIC16F15244	30E8h

8.7.2 Revision ID

Name: REVISIONID
Offset: 0x8005

Revision ID Register

Bit	15	14	13	12	11	10	9	8
			Reserved	Reserved	MJRREV[5:2]			
Access			R	R	R	R	R	R
Reset			1	0	q	q	q	q

Bit	7	6	5	4	3	2	1	0
	MJRREV[1:0]		MNRREV[5:0]					
Access	R	R	R	R	R	R	R	R
Reset	q	q	q	q	q	q	q	q

Bit 13 – Reserved Reserved - Read as ‘1’

Bit 12 – Reserved Reserved - Read as ‘0’

Bits 11:6 – MJRREV[5:0] Major Revision ID
These bits are used to identify a major revision (A0, B0, C0, etc.).

Bits 5:0 – MNRREV[5:0] Minor Revision ID
These bits are used to identify a minor revision.

9. Memory Organization

There are 2 types of memory in PIC16F152 microcontroller devices:

- Program Memory
  - Program Flash Memory
  - Configuration Words
  - Device ID
  - Revision ID
  - User ID
  - Device Information Area (DIA)
  - Device Configuration Information (DCI)
- Data Memory
  - Core Registers
  - Special Function Registers (FSR)
  - General Purpose RAM (GPR)
  - Common RAM

In Harvard architecture devices, the data and program memories use separate buses that allow for concurrent access of the two memory spaces.

Additional detailed information on the operation of the Program Flash Memory is provided in the **"NVM - Nonvolatile Memory Module"** section.

9.1 Program Memory Organization

The enhanced mid-range core has a 15-bit Program Counter capable of addressing 32K x 14 program memory space. The table below shows the memory sizes implemented. Accessing a location above these boundaries will cause a wrap-around within the implemented memory space.

The Reset vector is at 0000h and the interrupt vector is at 0004h. Refer to the **"Interrupts"** chapter for more details.

Table 9-1. Device Sizes And Addresses

Device	Program Memory Size (Words)	Last Program Memory Address
PIC16F15213	2,048	07FFh
PIC16F15214	4,096	0FFFh
PIC16F15223	2,048	07FFh
PIC16F15224	4,096	0FFFh
PIC16F15243	2,048	07FFh
PIC16F15244	4,096	0FFFh

Figure 9-1. Program Memory and Stack (PIC16F152x3)

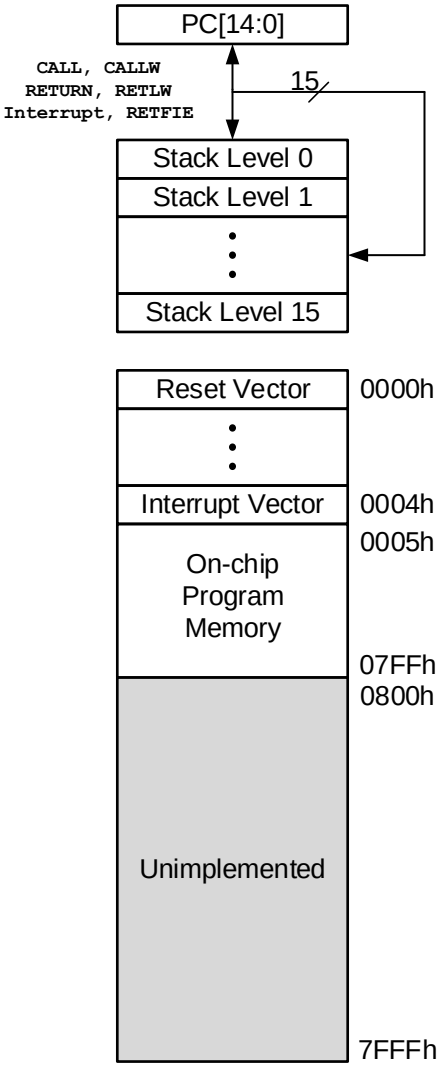

Figure 9-2. Program Memory and Stack (PIC16F152x4)

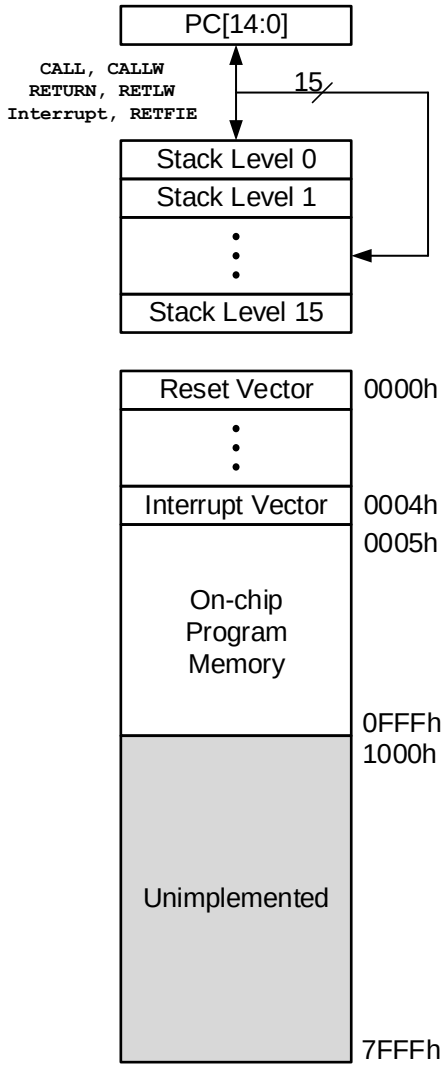

9.1.1 Reading Program Memory as Data

There are three methods of accessing constants in program memory. The first method is to use tables of `RETLW` instructions, the second, to set an FSR to point to the program memory, and the third is to use the NVMREG interface to access the program memory.

9.1.1.1 `RETLW` Instruction

The `RETLW` instruction can be used to provide access to tables of constants. The recommended way to create such a table is shown in the following example.

Example 9-1. Accessing Table of Constants Using the `RETLW` Instruction

```
constants
    BRW                     ;Add Index in W to
                            ;program counter to
                            ;select data
```

```
    RETLW DATA0             ;Index0 data
    RETLW DATA1             ;Index1 data
    RETLW DATA2
    RETLW DATA3
my_function
    ;… LOTS OF CODE…
    MOVLW        DATA_INDEX
    call constants
    ;… THE CONSTANT IS IN W
```

The BRW instruction eases the implementation of this type of table.

9.1.1.2 Indirect Read with FSR

The program memory can be accessed as data by setting bit 7 of an FSRxH register and reading the matching INDFx register. The MOVIW instruction will place the lower eight bits of the addressed word in the W register. Writes to the program memory cannot be performed via the INDFx registers. Instructions that read the program memory via the FSR require one extra instruction cycle to complete. The following example demonstrates reading the program memory via an FSR.

The high directive will set bit 7 if a label points to a location in the program memory. This applies to the assembly code shown below.

Example 9-2. Read of Program Memory Using FSR Register

```
constants
    RETLW DATA0        ;Index0 data
    RETLW DATA1        ;Index1 data
    RETLW DATA2
    RETLW DATA3
my_function
    ;… LOTS OF CODE…
    MOVLW    LOW constants
    MOVWF    FSR1L
    MOVLW    HIGH constants
    MOVWF    FSR1H
    MOVIW    2[FSR1]       ;DATA2 IS IN W
```

9.1.2 Memory Access Partition (MAP)

User Flash is partitioned into:

- Application Block
- Boot Block
- Storage Area Flash (SAF) Block

The user can allocate the memory usage by setting the $\overline{\text{BBEN}}$ bit, selecting the size of the partition defined by BBSIZE bits and enabling the Storage Area Flash by the $\overline{\text{SAFEN}}$ bit.

9.1.2.1 Application Block

Default settings of the Configuration bits ($\overline{\text{BBEN}}$ = 1 and $\overline{\text{SAFEN}}$ = 1) assign all memory in the user Flash area to the application block.

9.1.2.2 Boot Block

If $\overline{\text{BBEN}}$ = 1, the Boot Block is enabled and a specific address range is allotted as the Boot Block, based on the value of the BBSIZE bits.

9.1.2.3 Storage Area Flash

Storage Area Flash (SAF) is enabled by clearing the $\overline{\text{SAFEN}}$ bit. If enabled, the SAF block is placed at the end of memory and spans 128 words. If the Storage Area Flash (SAF) is enabled, the SAF area is not available for program execution.

Important: Storage Area Flash, when enabled, may be used to store variables or other information, often in devices without EEPROM; however, the SAF is accessed in the same manner as other Flash memory areas.

9.1.2.4 Memory Write Protection

All the memory blocks have corresponding write protection bits ($\overline{\text{WRTAPP}}$, $\overline{\text{WRTB}}$, $\overline{\text{WRTC}}$, and $\overline{\text{WRTSAF}}$). If write-protected locations are written from NVMCON registers, the memory is not changed and the WRERR bit of the NVMCON1 register is set as explained in the **"WRERR Bit"** section from the **"NVM - Nonvolatile Memory Control"** chapter.

9.1.2.5 Memory Violation

A Memory Execution Violation Reset occurs while executing an instruction that has been fetched from outside a valid execution area, clearing the $\overline{\text{MEMV}}$ bit. Refer to the **"Memory Execution Violation"** section in the **"Resets"** chapter for the available valid program execution areas and the PCON1 register definition for $\overline{\text{MEMV}}$ bit conditions.

Table 9-2. Memory Access Partition

REG	Address	Partition			
		$\overline{\text{BBEN}}$ = 1 $\overline{\text{SAFEN}}$ = 1	$\overline{\text{BBEN}}$ = 1 $\overline{\text{SAFEN}}$ = 0	$\overline{\text{BBEN}}$ = 0 $\overline{\text{SAFEN}}$ = 1	$\overline{\text{BBEN}}$ = 0 $\overline{\text{SAFEN}}$ = 0
PFM	00 0000h ... Last Block Memory Address	Application Block(4)	Application Block(4)	Boot Block(4)	Boot Block(4)
	Last Boot Block Memory Address + 1(1) ... Last Program Memory Address - 80h			Application Block(4)	Application Block(4)
	Last Program Memory Address - 7Fh(2) ... Last Program Memory Address		SAF(4)		SAF(4)
CONFIG	Config Memory Address(3)	CONFIG			

Notes:

1. Last Boot Block Memory Address is based on the BBSIZE Configuration bits.
2. Last Program Memory Address is the Flash size given in the **"Program Memory Organization"** section in the **"NVM - Nonvolatile Memory Control"** chapter.
3. Config Memory Address are the address locations of the Configuration Words given in the **"NVMREG Access to DIA, DCI, User ID, DEV/REV ID, and Configuration Words"** section in the **"NVM - Nonvolatile Memory Control"** chapter.
4. Each memory block has a corresponding write protection fuse defined by the $\overline{\text{WRTAPP}}$, $\overline{\text{WRTB}}$, $\overline{\text{WRTC}}$, and $\overline{\text{WRTSAF}}$ Configuration bits.

9.1.3 Device Information Area (DIA)

The Device Information Area (DIA) is a dedicated region in the Program Flash Memory. The data is mapped from address 8100h to 811 Fh. These locations are read-only and cannot be erased or modified. The DIA contains the Microchip Unique Identifier words, and the FVR voltage readings in millivolts (mV). Table 9-3 holds the DIA information for the PIC16F152 family of microcontrollers.

Table 9-3. Device Information Area

Address Range	Name of Region	Standard Device Information
8100h - 8108h	MUI0	Microchip Unique Identifier (9 Words)
	MUI1	
	MUI2	
	MUI3	
	MUI4	
	MUI5	
	MUI6	
	MUI7	
	MUI8	
8109h	MUI9	Reserved (1 Word)
810Ah - 8111h	EUI0	Optional External Unique Identifier (8 Words)
	EUI1	
	EUI2	
	EUI3	
	EUI4	
	EUI5	
	EUI6	
	EUI7	
8112h - 8117h	Reserved	Reserved (6 Words)
8118h	FVRA1X	ADC FVR1 output voltage for 1x setting (in mV)
8119h	FVRA2X	ADC FVR1 output voltage for 2x setting (in mV)
811Ah	FVRA4X	ADC FVR1 output voltage for 4x setting (in mV)
811Bh - 811Fh	Reserved	Reserved (5 Words)

9.1.3.1 Microchip Unique Identifier (MUI)

The PIC16F152 devices are individually encoded during final manufacturing with a Microchip Unique Identifier (MUI). The MUI cannot be erased by a Bulk Erase command or any other user-accessible means. This feature allows for manufacturing traceability of Microchip Technology devices in applications where this is required. It may also be used by the application manufacturer for a number of functions that require unverified unique identification, such as:

- Tracking the device
- Unique serial number

The MUI consists of nine program words. When taken together, these fields form a unique identifier. The MUI is stored in read-only locations, located between 8100h to 8108h in the DIA space. The DIA Table lists the addresses of the identifier words.

Important: For applications requiring verified unique identification, contact the Microchip Technology sales office to create a serialized quick turn programming option.

9.1.3.2 External Unique Identifier (EUI)

The EUI data is stored at locations 810Ah to 8111h in the program memory region. This region is an optional space for placing application specific information. The data is coded per customer requirements during manufacturing. The EUI cannot be erased by a Bulk Erase command.

Important: Data is stored in this address range on receiving a request from the customer. The customer may contact the local sales representative or Field Applications Engineer, and provide them the unique identifier information that is required to be stored in this region.

9.1.3.3 Fixed Voltage Reference (FVR) Data

The Fixed Voltage Reference (FVR) is a stable voltage reference, independent of V_{DD}, with 1.024V, 2.048V or 4.096V selectable output levels. The output of the FVR can be configured to supply a reference voltage to the following:

- ADC input channel
- ADC positive reference

For more information on the FVR, refer to the **"FVR - Fixed Voltage Reference"** section.

The DIA stores measured FVR voltages for this device in mV for the different buffer settings of 1x, 2x or 4x.

- FVRA1X stores the value of ADC FVR1 Output Voltage for 1x setting (in mV)
- FVRA2X stores the value of ADC FVR1 Output Voltage for 2x setting (in mV)
- FVRA4X stores the value of ADC FVR1 Output Voltage for 4x setting (in mV)

9.1.4 Device Configuration Information (DCI)

The Device Configuration Information (DCI) is a dedicated region in the memory that holds information about the device, which is useful for programming and bootloader applications. The data stored in this region is read-only and cannot be modified/erased. Refer to the table below for complete DCI table addresses and description.

Table 9-4. Device Configuration Information

Address	Name	Description	Value		Units
			PIC16F15213 PIC16F15223 PIC16F15243	PIC16F15214 PIC16F15224 PIC16F15244	
8200h	ERSIZ	Erase Row Size	32		Words
8201h	WLSIZ	Number of write latches per row	32		Words
8202h	URSIZ	Number of user erasable rows	64	128	Rows
8203h	EESIZ	Data EEPROM memory size	0		Bytes
8204h	PCNT	Pin Count	8/14/20		Pins

9.1.4.1 DIA and DCI Access

The DIA and DCI data are read-only and cannot be erased or modified. See the **"NVMREG Access to DIA, DCI, User ID, DEV/REV ID, and Configuration Words"** section in the **"NVM - Nonvolatile Memory Control"** chapter for more information on accessing these memory locations.

Development tools, such as device programmers and debuggers, may be used to read the DIA and DCI regions, similar to the Device ID and Revision ID.

9.2 Data Memory Organization

The data memory is partitioned into up to 64 memory banks with 128 bytes in each bank. Each bank consists of:

- 12 core registers
- Up to 20 Special Function Registers (SFR)
- Up to 80 bytes of General Purpose RAM (GPR)
- 16 bytes of common RAM

Figure 9-3. Banked Memory Partition

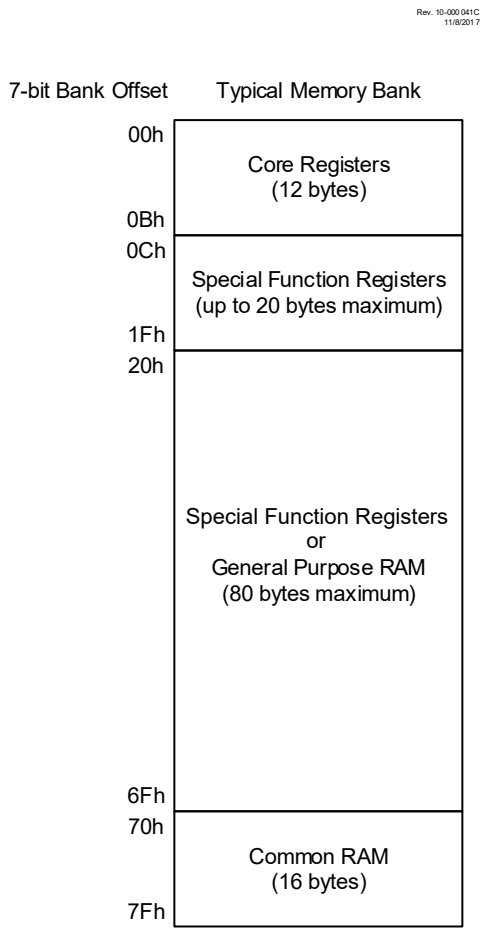

9.2.1 Bank Selection

The active bank is selected by writing the bank number into the Bank Select Register (BSR). All data memory can be accessed either directly via instructions that use the file registers, or indirectly via the two File Select Registers (FSRs). Data memory uses a 13-bit address. The upper six bits of the address define the Bank Address and the lower seven bits select the registers/RAM in that bank.

9.2.2 Core Registers

The core registers contain the registers that directly affect the basic operation. The core registers occupy the first 12 addresses of every data memory bank. These registers are listed in the Core Registers table below.

Table 9-5. Core Registers

Addresses in BANKx	Core Registers
x00h or x80h	INDF0
x01h or x81h	INDF1
x02h or x82h	PCL
x03h or x83h	STATUS
x04h or x84h	FSR0L
x05h or x85h	FSR0H
x06h or x86h	FSR1L
x07h or x87h	FSR1H
x08h or x88h	BSR
x09h or x89h	WREG
x0Ah or x8Ah	PCLATH
x0Bh or x8Bh	INTCON

9.2.3 Special Function Register

The Special Function Registers (SFR) are registers used by the application to control the desired operation of peripheral functions in the device. The SFRs occupy the first 20 bytes of the data banks 0-59 and the first 100 bytes of the data banks 60-63, after the core registers.

The SFRs associated with the operation of the peripherals are described in the appropriate peripheral chapter of this data sheet.

9.2.4 General Purpose RAM

There are up to 80 bytes of GPR in each data memory bank. The general purpose RAM can be accessed in a non-banked method via the FSRs. This can simplify access to large memory structures.

Refer to the **"Linear Data Memory"** section in the **"Memory Organization"** chapter for details about linear memory accessing.

9.2.5 Common RAM

There are 16 bytes of common RAM accessible from all banks.

9.2.6 Device Memory Maps

The memory maps for the devices in this data sheet are listed in the following figures.

Figure 9-4. Memory Map Banks 0 - 7

	BANK 0		BANK 1		BANK 2		BANK 3		BANK 4		BANK 5		BANK 6		BANK 7
000h	Core Registers	080h	Core Registers	100h	Core Registers	180h	Core Registers	200h	Core Registers	280h	Core Registers	300h	Core Registers	380h	Core Registers
00Bh		08Bh		10Bh		18Bh		20Bh		28Bh		30Bh		38Bh	
00Ch	PORTA	08Ch	—	10Ch	RB4I2C(1)	18Ch	SSP1BUF	20Ch	TMR1L	28Ch	T2TMR	30Ch	CCPR1L	38Ch	—
00Dh	PORTB(1)	08Dh	—	10Dh	RB6I2C(1)	18Dh	SSP1ADD	20Dh	TMR1H	28Dh	T2PR	30Dh	CCPR1H	38Dh	—
00Eh	PORTC(2)	08Eh	—	10Eh	RC0I2C(3)	18Eh	SSP1MSK	20Eh	T1CON	28Eh	T2CON	30Eh	CCP1CON	38Eh	—
00Fh	—	08Fh	—	10Fh	RC1I2C(3)	18Fh	SSP1STAT	20Fh	T1GCON	28Fh	T2HLT	30Fh	CCP1CAP	38Fh	—
010h	—	090h	—	110h	—	190h	SSP1CON1	210h	T1GATE	290h	T2CLK	310h	CCPR2L	390h	—
011h	—	091h	—	111h	—	191h	SSP1CON2	211h	T1CLK	291h	T2RST	311h	CCPR2H	391h	—
012h	TRISA	092h	—	112h	—	192h	SSP1CON3	212h	—	292h	—	312h	CCP2CON	392h	—
013h	TRISB(1)	093h	—	113h	—	193h	—	213h	—	293h	—	313h	CCP2CAP	393h	—
014h	TRISC(2)	094h	—	114h	—	194h	—	214h	—	294h	—	314h	PWM3DCL	394h	—
015h	—	095h	—	115h	—	195h	—	215h	—	295h	—	315h	PWM3DCH	395h	—
016h	—	096h	—	116h	—	196h	—	216h	—	296h	—	316h	PWM3CON	396h	—
017h	—	097h	—	117h	—	197h	—	217h	—	297h	—	317h	—	397h	—
018h	LATA	098h	—	118h	—	198h	—	218h	—	298h	—	318h	PWM4DCL	398h	—
019h	LATB(1)	099h	—	119h	RC1REG	199h	—	219h	—	299h	—	319h	PWM4DCH	399h	—
01Ah	LATC(2)	09Ah	CPCON	11Ah	TX1REG	19Ah	—	21Ah	—	29Ah	—	31Ah	PWM4CON	39Ah	—
01Bh	—	09Bh	ADRESL	11Bh	SP1BRGL	19Bh	—	21Bh	—	29Bh	—	31Bh	—	39Bh	—
01Ch	—	09Ch	ADRESH	11Ch	SP1BRGH	19Ch	—	21Ch	—	29Ch	—	31Ch	—	39Ch	—
01Dh	—	09Dh	ADCON0	11Dh	RC1STA	19Dh	—	21Dh	—	29Dh	—	31Dh	—	39Dh	—
01Eh	—	09Eh	ADCON1	11Eh	TX1STA	19Eh	—	21Eh	—	29Eh	—	31Eh	—	39Eh	—
01Fh	—	09Fh	ADACT	11Fh	BAUD1CON	19Fh	—	21Fh	—	29Fh	—	31Fh	—	39Fh	—
020h	General Purpose Registers 80 Bytes	0A0h	General Purpose Registers 80 Bytes	120h	General Purpose Registers 80 Bytes	1A0h	General Purpose Registers 80 Bytes(4)	220h	General Purpose Registers 80 Bytes(4)	2A0h	General Purpose Registers 80 Bytes(4)	320h	General Purpose Registers 16 Bytes(4)	3A0h	Unimplemented Read as '0'
06Fh		0EFh		16Fh		1EFh		26Fh		2EFh		32Fh		3EFh	
070h	Common RAM (Accesses 70h-7Fh)	0F0h	Common RAM (Accesses 70h-7Fh)	170h	Common RAM (Accesses 70h-7Fh)	1F0h	Common RAM (Accesses 70h-7Fh)	270h	Common RAM (Accesses 70h-7Fh)	2F0h	Common RAM (Accesses 70h-7Fh)	330h	Unimplemented Read as '0'	3F0h	Common RAM (Accesses 70h-7Fh)
07Fh		0FFh		17Fh		1FFh		27Fh		2FFh		37Fh		3FFh	

Note:
1. **20-pin devices only**
2. **14/20-pin devices only**
3. **14-pin devices only**
4. **PIC16F15214/24/44 only**

Legend:
Unimplemented data memory locations, read as '0'

Figure 9-5. Memory Map Banks 8 - 15

	BANK 8		BANK 9		BANK 10		BANK 11		BANK 12		BANK 13		BANK 14		BANK 15
400h	Core Registers	480h	Core Registers	500h	Core Registers	580h	Core Registers	600h	Core Registers	680h	Core Registers	700h	Core Registers	780h	Core Registers
40Bh		48Bh		50Bh		58Bh		60Bh		68Bh		70Bh		78Bh	
40Ch	—	48Ch	—	50Ch	—	58Ch	—	60Ch	—	68Ch	—	70Ch	PIR0	78Ch	—
40Dh	—	48Dh	—	50Dh	—	58Dh	—	60Dh	—	68Dh	—	70Dh	PIR1	78Dh	—
40Eh	—	48Eh	—	50Eh	—	58Eh	—	60Eh	—	68Eh	—	70Eh	PIR2	78Eh	—
40Fh	—	48Fh	—	50Fh	—	58Fh	—	60Fh	—	68Fh	—	70Fh	—	78Fh	—
410h	—	490h	—	510h	—	590h	—	610h	—	690h	—	710h	—	790h	—
411h	—	491h	—	511h	—	591h	—	611h	—	691h	—	711h	—	791h	—
412h	—	492h	—	512h	—	592h	—	612h	—	692h	—	712h	—	792h	—
413h	—	493h	—	513h	—	593h	—	613h	—	693h	—	713h	—	793h	—
414h	—	494h	—	514h	—	594h	—	614h	—	694h	—	714h	—	794h	—
415h	—	495h	—	515h	—	595h	—	615h	—	695h	—	715h	—	795h	—
416h	—	496h	—	516h	—	596h	—	616h	—	696h	—	716h	PIE0	796h	—
417h	—	497h	—	517h	—	597h	—	617h	—	697h	—	717h	PIE1	797h	—
418h	—	498h	—	518h	—	598h	—	618h	—	698h	—	718h	PIE2	798h	—
419h	—	499h	—	519h	—	599h	—	619h	—	699h	—	719h	—	799h	—
41Ah	—	49Ah	—	51Ah	—	59Ah	—	61Ah	—	69Ah	—	71Ah	—	79Ah	—
41Bh	—	49Bh	—	51Bh	—	59Bh	—	61Bh	—	69Bh	—	71Bh	—	79Bh	—
41Ch	—	49Ch	—	51Ch	—	59Ch	TMR0L	61Ch	—	69Ch	—	71Ch	—	79Ch	—
41Dh	—	49Dh	—	51Dh	—	59Dh	TRM0H	61Dh	—	69Dh	—	71Dh	—	79Dh	—
41Eh	—	49Eh	—	51Eh	—	59Eh	T0CON0	61Eh	—	69Eh	—	71Eh	—	79Eh	—
41Fh	—	49Fh	—	51Fh	—	59Fh	T0CON1	61Fh	—	69Fh	—	71Fh	—	79Fh	—
420h	Unimplemented Read as '0'	4A0h	Unimplemented Read as '0'	520h	Unimplemented Read as '0'	5A0h	Unimplemented Read as '0'	620h	Unimplemented Read as '0'	6A0h	Unimplemented Read as '0'	720h	Unimplemented Read as '0'	7A0h	Unimplemented Read as '0'
46Fh		4EFh		56Fh		5EFh		66Fh		6EFh		76Fh		7EFh	
470h	Common RAM (Accesses 70h-7Fh)	4F0h	Common RAM (Accesses 70h-7Fh)	570h	Common RAM (Accesses 70h-7Fh)	5F0h	Common RAM (Accesses 70h-7Fh)	670h	Common RAM (Accesses 70h-7Fh)	6F0h	Common RAM (Accesses 70h-7Fh)	770h	Common RAM (Accesses 70h-7Fh)	7F0h	Common RAM (Accesses 70h-7Fh)
47Fh		4FFh		57Fh		5FFh		67Fh		6FFh		77Fh		7FFh	

Legend:
Unimplemented data memory locations, read as '0'

Figure 9-6. Memory Map Banks 16 - 23

	BANK 16		BANK 17		BANK 18		BANK 19		BANK 20		BANK 21		BANK 22		BANK 23
800h	Core Registers	880h	Core Registers	900h	Core Registers	980h	Core Registers	A00h	Core Registers	A80h	Core Registers	B00h	Core Registers	B80h	Core Registers
80Bh		88Bh		90Bh		98Bh		A0Bh		A8Bh		B0Bh		B8Bh	
80Ch	WDTCON	88Ch	—	90Ch	FVRCON	98Ch	—	A0Ch	—	A8Ch	—	B0Ch	—	B8Ch	—
80Dh	—	88Dh	—	90Dh	—	98Dh	—	A0Dh	—	A8Dh	—	B0Dh	—	B8Dh	—
80Eh	—	88Eh	OSCCON	90Eh	—	98Eh	—	A0Eh	—	A8Eh	—	B0Eh	—	B8Eh	—
80Fh	—	88Fh	—	90Fh	—	98Fh	—	A0Fh	—	A8Fh	—	B0Fh	—	B8Fh	—
810h	—	890h	OSCSTAT	910h	—	990h	—	A10h	—	A90h	—	B10h	—	B90h	—
811h	BORCON	891h	OSCEN	911h	—	991h	—	A11h	—	A91h	—	B11h	—	B91h	—
812h	—	892h	OSCTUNE	912h	—	992h	—	A12h	—	A92h	—	B12h	—	B92h	—
813h	PCON0	893h	OSCFRQ	913h	—	993h	—	A13h	—	A93h	—	B13h	—	B93h	—
814h	PCON1	894h	—	914h	—	994h	—	A14h	—	A94h	—	B14h	—	B94h	—
815h	—	895h	—	915h	—	995h	—	A15h	—	A95h	—	B15h	—	B95h	—
816h	—	896h	—	916h	—	996h	—	A16h	—	A96h	—	B16h	—	B96h	—
817h	—	897h	—	917h	—	997h	—	A17h	—	A97h	—	B17h	—	B97h	—
818h	—	898h	—	918h	—	998h	—	A18h	—	A98h	—	B18h	—	B98h	—
819h	—	899h	—	919h	—	999h	—	A19h	—	A99h	—	B19h	—	B99h	—
81Ah	NVMADRL	89Ah	—	91Ah	—	99Ah	—	A1Ah	—	A9Ah	—	B1Ah	—	B9Ah	—
81Bh	NVMADRH	89Bh	—	91Bh	—	99Bh	—	A1Bh	—	A9Bh	—	B1Bh	—	B9Bh	—
81Ch	NVMDATL	89Ch	—	91Ch	—	99Ch	—	A1Ch	—	A9Ch	—	B1Ch	—	B9Ch	—
81Dh	NVMDATH	89Dh	—	91Dh	—	99Dh	—	A1Dh	—	A9Dh	—	B1Dh	—	B9Dh	—
81Eh	NVMCON1	89Eh	—	91Eh	—	99Eh	—	A1Eh	—	A9Eh	—	B1Eh	—	B9Eh	—
81Fh	NVMCON2	89Fh	—	91Fh	—	99Fh	—	A1Fh	—	A9Fh	—	B1Fh	—	B9Fh	—
820h	Unimplemented Read as '0'	8A0h	Unimplemented Read as '0'	920h	Unimplemented Read as '0'	9A0h	Unimplemented Read as '0'	A20h	Unimplemented Read as '0'	AA0h	Unimplemented Read as '0'	B20h	Unimplemented Read as '0'	BA0h	Unimplemented Read as '0'
86Fh		8EFh		96Fh		9EFh		A6Fh		AEFh		B6Fh		BEFh	
870h	Common RAM (Accesses 70h-7Fh)	8F0h	Common RAM (Accesses 70h-7Fh)	970h	Common RAM (Accesses 70h-7Fh)	9F0h	Common RAM (Accesses 70h-7Fh)	A70h	Common RAM (Accesses 70h-7Fh)	AF0h	Common RAM (Accesses 70h-7Fh)	B70h	Common RAM (Accesses 70h-7Fh)	BF0h	Common RAM (Accesses 70h-7Fh)
87Fh		8FFh		97Fh		9FFh		A7Fh		AFFh		B7Fh		BFFh	

Legend:
Unimplemented data memory locations, read as '0'

Figure 9-7. Memory Map Banks 24 - 31

	BANK 24		BANK 25		BANK 26		BANK 27		BANK 28		BANK 29		BANK 30		BANK 31
C00h	Core Registers	C80h	Core Registers	D00h	Core Registers	D80h	Core Registers	E00h	Core Registers	E80h	Core Registers	F00h	Core Registers	F80h	Core Registers
C0Bh		C8Bh		D0Bh		D8Bh		E0Bh		E8Bh		F0Bh		F8Bh	
C0Ch	—	C8Ch	—	D0Ch	—	D8Ch	—	E0Ch	—	E8Ch	—	F0Ch	—	F8Ch	—
C0Dh	—	C8Dh	—	D0Dh	—	D8Dh	—	E0Dh	—	E8Dh	—	F0Dh	—	F8Dh	—
C0Eh	—	C8Eh	—	D0Eh	—	D8Eh	—	E0Eh	—	E8Eh	—	F0Eh	—	F8Eh	—
C0Fh	—	C8Fh	—	D0Fh	—	D8Fh	—	E0Fh	—	E8Fh	—	F0Fh	—	F8Fh	—
C10h	—	C90h	—	D10h	—	D90h	—	E10h	—	E90h	—	F10h	—	F90h	—
C11h	—	C91h	—	D11h	—	D91h	—	E11h	—	E91h	—	F11h	—	F91h	—
C12h	—	C92h	—	D12h	—	D92h	—	E12h	—	E92h	—	F12h	—	F92h	—
C13h	—	C93h	—	D13h	—	D93h	—	E13h	—	E93h	—	F13h	—	F93h	—
C14h	—	C94h	—	D14h	—	D94h	—	E14h	—	E94h	—	F14h	—	F94h	—
C15h	—	C95h	—	D15h	—	D95h	—	E15h	—	E95h	—	F15h	—	F95h	—
C16h	—	C96h	—	D16h	—	D96h	—	E16h	—	E96h	—	F16h	—	F96h	—
C17h	—	C97h	—	D17h	—	D97h	—	E17h	—	E97h	—	F17h	—	F97h	—
C18h	—	C98h	—	D18h	—	D98h	—	E18h	—	E98h	—	F18h	—	F98h	—
C19h	—	C99h	—	D19h	—	D99h	—	E19h	—	E99h	—	F19h	—	F99h	—
C1Ah	—	C9Ah	—	D1Ah	—	D9Ah	—	E1Ah	—	E9Ah	—	F1Ah	—	F9Ah	—
C1Bh	—	C9Bh	—	D1Bh	—	D9Bh	—	E1Bh	—	E9Bh	—	F1Bh	—	F9Bh	—
C1Ch	—	C9Ch	—	D1Ch	—	D9Ch	—	E1Ch	—	E9Ch	—	F1Ch	—	F9Ch	—
C1Dh	—	C9Dh	—	D1Dh	—	D9Dh	—	E1Dh	—	E9Dh	—	F1Dh	—	F9Dh	—
C1Eh	—	C9Eh	—	D1Eh	—	D9Eh	—	E1Eh	—	E9Eh	—	F1Eh	—	F9Eh	—
C1Fh	—	C9Fh	—	D1Fh	—	D9Fh	—	E1Fh	—	E9Fh	—	F1Fh	—	F9Fh	—
C20h	Unimplemented Read as '0'	CA0h	Unimplemented Read as '0'	D20h	Unimplemented Read as '0'	DA0h	Unimplemented Read as '0'	E20h	Unimplemented Read as '0'	EA0h	Unimplemented Read as '0'	F20h	Unimplemented Read as '0'	FA0h	Unimplemented Read as '0'
C6Fh		CBFh		D6Fh		DEFh		E6Fh		EEFh		F6Fh		FEFh	
C70h	Common RAM (Accesses 70h-7Fh)	CC0h		D70h	Common RAM (Accesses 70h-7Fh)	DF0h	Common RAM (Accesses 70h-7Fh)	E70h	Common RAM (Accesses 70h-7Fh)	EF0h	Common RAM (Accesses 70h-7Fh)	F70h	Common RAM (Accesses 70h-7Fh)	FF0h	Common RAM (Accesses 70h-7Fh)
C7Fh		CF0h	Common RAM (Accesses 70h-7Fh)	D7Fh		DFFh		E7Fh		EFFh		F7Fh		FFFh	
		CFFh													

Legend:
Unimplemented data memory locations, read as '0'

Figure 9-8. Memory Map Banks 32 - 39

BANK 32	BANK 33	BANK 34	BANK 35	BANK 36	BANK 37	BANK 38	BANK 39
1000h	1080h	1100h	1180h	1200h	1280h	1300h	1380h
Core Registers	Core Registers	Core Registers	Core Registers	Core Registers	Core Registers	Core Registers	Core Registers
100Bh	108Bh	110Bh	118Bh	120Bh	128Bh	130Bh	138Bh
100Ch —	108Ch —	110Ch —	118Ch —	120Ch —	128Ch —	130Ch —	138Ch —
100Dh —	108Dh —	110Dh —	118Dh —	120Dh —	128Dh —	130Dh —	138Dh —
100Eh —	108Eh —	110Eh —	118Eh —	120Eh —	128Eh —	130Eh —	138Eh —
100Fh —	108Fh —	110Fh —	118Fh —	120Fh —	128Fh —	130Fh —	138Fh —
1010h —	1090h —	1110h —	1190h —	1210h —	1290h —	1310h —	1390h —
1011h —	1091h —	1111h —	1191h —	1211h —	1291h —	1311h —	1391h —
1012h —	1092h —	1112h —	1192h —	1212h —	1292h —	1312h —	1392h —
1013h —	1093h —	1113h —	1193h —	1213h —	1293h —	1313h —	1393h —
1014h —	1094h —	1114h —	1194h —	1214h —	1294h —	1314h —	1394h —
1015h —	1095h —	1115h —	1195h —	1215h —	1295h —	1315h —	1395h —
1016h —	1096h —	1116h —	1196h —	1216h —	1296h —	1316h —	1396h —
1017h —	1097h —	1117h —	1197h —	1217h —	1297h —	1317h —	1397h —
1018h —	1098h —	1118h —	1198h —	1218h —	1298h —	1318h —	1398h —
1019h —	1099h —	1119h —	1199h —	1219h —	1299h —	1319h —	1399h —
101Ah —	109Ah —	111Ah —	119Ah —	121Ah —	129Ah —	131Ah —	139Ah —
101Bh —	109Bh —	111Bh —	119Bh —	121Bh —	129Bh —	131Bh —	139Bh —
101Ch —	109Ch —	111Ch —	119Ch —	121Ch —	129Ch —	131Ch —	139Ch —
101Dh —	109Dh —	111Dh —	119Dh —	121Dh —	129Dh —	131Dh —	139Dh —
101Eh —	109Eh —	111Eh —	119Eh —	121Eh —	129Eh —	131Eh —	139Eh —
101Fh —	109Fh —	111Fh —	119Fh —	121Fh —	129Fh —	131Fh —	139Fh —
1020h	10A0h	1120h	11A0h	1220h	12A0h	1320h	13A0h
Unimplemented Read as '0'	Unimplemented Read as '0'	Unimplemented Read as '0'	Unimplemented Read as '0'	Unimplemented Read as '0'	Unimplemented Read as '0'	Unimplemented Read as '0'	Unimplemented Read as '0'
106Fh	10EFh	116Fh	11EFh	126Fh	12EFh	136Fh	13EFh
1070h	10F0h	1170h	11F0h	1270h	12F0h	1370h	13F0h
Common RAM (Accesses 70h-7Fh)	Common RAM (Accesses 70h-7Fh)	Common RAM (Accesses 70h-7Fh)	Common RAM (Accesses 70h-7Fh)	Common RAM (Accesses 70h-7Fh)	Common RAM (Accesses 70h-7Fh)	Common RAM (Accesses 70h-7Fh)	Common RAM (Accesses 70h-7Fh)
107Fh	10FFh	117Fh	11FFh	127Fh	12FFh	137Fh	13FFh

Legend:
Unimplemented data memory locations, read as '0'

Figure 9-9. Memory Map Banks 40 - 47

BANK 40	BANK 41	BANK 42	BANK 43	BANK 44	BANK 45	BANK 46	BANK 47
1400h	1480h	1500h	1580h	1600h	1680h	1700h	1780h
Core Registers	Core Registers	Core Registers	Core Registers	Core Registers	Core Registers	Core Registers	Core Registers
140Bh	148Bh	150Bh	158Bh	160Bh	168Bh	170Bh	178Bh
140Ch —	148Ch —	150Ch —	158Ch —	160Ch —	168Ch —	170Ch —	178Ch —
140Dh —	148Dh —	150Dh —	158Dh —	160Dh —	168Dh —	170Dh —	178Dh —
140Eh —	148Eh —	150Eh —	158Eh —	160Eh —	168Eh —	170Eh —	178Eh —
140Fh —	148Fh —	150Fh —	158Fh —	160Fh —	168Fh —	170Fh —	178Fh —
1410h —	1490h —	1510h —	1590h —	1610h —	1690h —	1710h —	1790h —
1411h —	1491h —	1511h —	1591h —	1611h —	1691h —	1711h —	1791h —
1412h —	1492h —	1512h —	1592h —	1612h —	1692h —	1712h —	1792h —
1413h —	1493h —	1513h —	1593h —	1613h —	1693h —	1713h —	1793h —
1414h —	1494h —	1514h —	1594h —	1614h —	1694h —	1714h —	1794h —
1415h —	1495h —	1515h —	1595h —	1615h —	1695h —	1715h —	1795h —
1416h —	1496h —	1516h —	1596h —	1616h —	1696h —	1716h —	1796h —
1417h —	1497h —	1517h —	1597h —	1617h —	1697h —	1717h —	1797h —
1418h —	1498h —	1518h —	1598h —	1618h —	1698h —	1718h —	1798h —
1419h —	1499h —	1519h —	1599h —	1619h —	1699h —	1719h —	1799h —
141Ah —	149Ah —	151Ah —	159Ah —	161Ah —	169Ah —	171Ah —	179Ah —
141Bh —	149Bh —	151Bh —	159Bh —	161Bh —	169Bh —	171Bh —	179Bh —
141Ch —	149Ch —	151Ch —	159Ch —	161Ch —	169Ch —	171Ch —	179Ch —
141Dh —	149Dh —	151Dh —	159Dh —	161Dh —	169Dh —	171Dh —	179Dh —
141Eh —	149Eh —	151Eh —	159Eh —	161Eh —	169Eh —	171Eh —	179Eh —
141Fh —	149Fh —	151Fh —	159Fh —	161Fh —	169Fh —	171Fh —	179Fh —
1420h	14A0h	1520h	15A0h	1620h	16A0h	1720h	17A0h
Unimplemented Read as '0'	Unimplemented Read as '0'	Unimplemented Read as '0'	Unimplemented Read as '0'	Unimplemented Read as '0'	Unimplemented Read as '0'	Unimplemented Read as '0'	Unimplemented Read as '0'
146Fh	14EFh	156Fh	15EFh	166Fh	16EFh	176Fh	17EFh
1470h	14F0h	1570h	15F0h	1670h	16F0h	1770h	17F0h
Common RAM (Accesses 70h-7Fh)	Common RAM (Accesses 70h-7Fh)	Common RAM (Accesses 70h-7Fh)	Common RAM (Accesses 70h-7Fh)	Common RAM (Accesses 70h-7Fh)	Common RAM (Accesses 70h-7Fh)	Common RAM (Accesses 70h-7Fh)	Common RAM (Accesses 70h-7Fh)
147Fh	14FFh	157Fh	15FFh	167Fh	16FFh	177Fh	17FFh

Legend:
Unimplemented data memory locations, read as '0'

Figure 9-10. Memory Map Banks 48 - 55

	BANK 48	BANK 49	BANK 50	BANK 51	BANK 52	BANK 53	BANK 54	BANK 55
1800h	Core Registers	Core Registers	Core Registers	Core Registers	Core Registers	Core Registers	Core Registers	Core Registers
180Bh								
180Ch	—	—	—	—	—	—	—	—
180Dh	—	—	—	—	—	—	—	—
180Eh	—	—	—	—	—	—	—	—
180Fh	—	—	—	—	—	—	—	—
1810h	—	—	—	—	—	—	—	—
1811h	—	—	—	—	—	—	—	—
1812h	—	—	—	—	—	—	—	—
1813h	—	—	—	—	—	—	—	—
1814h	—	—	—	—	—	—	—	—
1815h	—	—	—	—	—	—	—	—
1816h	—	—	—	—	—	—	—	—
1817h	—	—	—	—	—	—	—	—
1818h	—	—	—	—	—	—	—	—
1819h	—	—	—	—	—	—	—	—
181Ah	—	—	—	—	—	—	—	—
181Bh	—	—	—	—	—	—	—	—
181Ch	—	—	—	—	—	—	—	—
181Dh	—	—	—	—	—	—	—	—
181Eh	—	—	—	—	—	—	—	—
181Fh	—	—	—	—	—	—	—	—
1820h	Unimplemented Read as '0'	Unimplemented Read as '0'	Unimplemented Read as '0'	Unimplemented Read as '0'	Unimplemented Read as '0'	Unimplemented Read as '0'	Unimplemented Read as '0'	Unimplemented Read as '0'
186Fh								
1870h	Common RAM (Accesses 70h-7Fh)	Common RAM (Accesses 70h-7Fh)	Common RAM (Accesses 70h-7Fh)	Common RAM (Accesses 70h-7Fh)	Common RAM (Accesses 70h-7Fh)	Common RAM (Accesses 70h-7Fh)	Common RAM (Accesses 70h-7Fh)	Common RAM (Accesses 70h-7Fh)
187Fh								

Legend:
Unimplemented data memory locations, read as '0'

Figure 9-11. Memory Map Banks 56 - 63

	BANK 56	BANK 57	BANK 58	BANK 59	BANK 60	BANK 61	BANK 62	BANK 63
1C00h	Core Registers	Core Registers	Core Registers	Core Registers	Core Registers	Core Registers	Core Registers	Core Registers
1C0Bh								
1C0Ch	Unimplemented Read as '0'	Unimplemented Read as '0'	Unimplemented Read as '0'	Unimplemented Read as '0'	UMTOAP	See Table 2 for register mapping details	See Table 3 for register mapping details	Unimplemented Read as '0'
1C6Fh								
1C70h	Common RAM (Accesses 70h-7Fh)	Common RAM (Accesses 70h-7Fh)	Common RAM (Accesses 70h-7Fh)	Common RAM (Accesses 70h-7Fh)	Common RAM (Accesses 70h-7Fh)	Common RAM (Accesses 70h-7Fh)	Common RAM (Accesses 70h-7Fh)	Common RAM (Accesses 70h-7Fh)
1C7Fh								
1C80h								
1C8Bh								
1C8Ch								
1CEFh								
1CF0h								
1CFFh								
1D00h								
1D0Bh								
1D0Ch								
1D6Fh								
1D70h								
1D7Fh								
1D80h								
1D8Bh								
1D8Ch								
1DEFh								
1DF0h								
1DFFh								
1E00h								
1E0Bh								
1E0Ch					UMTOAL			
1E0Dh					UMTOAH			
1E0Eh								
1E0Fh					Unimplemented Read as '0'			
1E6Fh								
1E70h								
1E7Fh								
1E80h								
1E8Bh								
1E8Ch								
1EEFh								
1EF0h								
1EFFh								
1F00h								
1F0Bh								
1F0Ch								
1F6Fh								
1F70h								
1F7Fh								
1F80h								
1F8Bh								
1F8Ch								
1FE3h								
1FE4h								STATUS_SHAD
1FE5h								WREG_SHAD
1FE6h								BSR_SHAD
1FE7h								PCLATH_SHAD
1FE8h								FSR0L_SHAD
1FE9h								FSR0H_SHAD
1FEAh								FSR1L_SHAD
1FEBh								FSR1H_SHAD
1FECh								—
1FEDh								STKPTR
1FEEh								TOSL
1FEFh								TOSH
1F0Fh								Common RAM (Accesses 70h-7Fh)
1FFFh								

Legend:
Unimplemented data memory locations, read as '0'

Figure 9-12. Memory Map Bank 61

BANK 61	
1E80h 1E8Bh	Core Registers
1E8Ch 1E8Dh 1E8Eh	Unimplemented Read as '0'
1E8Fh	PPSLOCK
1E90h	INTPPS
1E91h	T0CKIPPS
1E92h	T1CKIPPS
1E93h	T1GPPS
1E94h 1E9Bh	Unimplemented Read as '0'
1E9Ch	T2INPPS
1E9Dh 1EA0h	Unimplemented Read as '0'
1EA1h	CCP1PPS
1EA2h	CCP2PPS
1EA3h 1EC2h	Unimplemented Read as '0'
1EC3h	ADACTPPS
1EC4h	—
1EC5h	SSP1CLKPPS
1EC6h	SSP1DATPPS
1EC7h	SSP1SSPPS
1EC8h 1ECAh	Unimplemented Read as '0'
1ECBh	RX1PPS
1ECCh	CK1PPS
1ECDh 1E6Fh	Unimplemented Read as '0'
1E70h 1E7Fh	Common RAM (Accesses 70h-7Fh)

Legend:

Unimplemented data memory locations, read as '0'

Figure 9-13. Memory Map Bank 62

BANK 62

1F00h	Core registers	1F3Bh	SLRCONA
		1F3Ch	INLVLA
1F0Bh		1F3Dh	IOCAP
1F0Ch	Unimplemented Read as '0'	1F3Eh	IOCAN
		1F3Fh	IOCAF
1F0Fh		1F40h	Unimplemented Read as '0'
1F10h	RA0PPS		
1F11h	RA1PPS	1F42h	
1F12h	RA2PPS	1F43h	ANSELB(1)
1F13h	RA3PPS	1F44h	WPUB(1)
1F14h	RA4PPS	1F45h	ODCONB(1)
1F15h	RA5PPS	1F46h	SLRCONB(1)
1F16h	Unimplemented Read as '0'	1F47h	INLVLB(1)
		1F48h	IOCBP(1)
1F1Bh		1F49h	IOCBN(1)
1F1Ch	RB4PPS(1)	1F4Ah	IOCBF(1)
1F1Dh	RB5PPS(1)	1F4Bh	Unimplemented Read as '0'
1F1Eh	RB6PPS(1)		
1F1Fh	RB7PPS(1)	1F4Dh	
1F20h	RC0PPS(2)	1F4Eh	ANSELC(2)
1F21h	RC1PPS(2)	1F4Fh	WPUC(2)
1F22h	RC2PPS(2)	1F50h	ODCONC(2)
1F23h	RC3PPS(2)	1F51h	SLRCONC(2)
1F24h	RC4PPS(2)	1F52h	INLVLC(2)
1F25h	RC5PPS(2)	1F53h	IOCCP(2)
1F26h	RC6PPS(1)	1F54h	IOCCN(2)
1F27h	RC7PPS(1)	1F55h	IOCCF(2)
1F28h	Unimplemented Read as '0'	1F56h	Unimplemented Read as '0'
1F37h		1F6Fh	
1F38h	ANSELA	1F70h	Common RAM (Accesses 70h-7Fh)
1F39h	WPUA		
1F3Ah	ODCONA	1F7Fh	

Note: **1. 20-pin devices only**
2. 14/20-pin devices only

Legend:

Unimplemented data memory locations, read as '0'

9.3 STATUS Register

The STATUS register contains:

- the arithmetic status of the ALU
- the Reset status

The STATUS register can be the destination for any instruction, like any other register. If the STATUS register is the destination for an instruction that affects the Z, DC or C bits, then writes to these three bits are disabled. These bits are set or cleared according to the device logic. Furthermore, the $\overline{TO}$ and $\overline{PD}$ bits are not writable. Therefore, the result of an instruction with the STATUS register as destination may be different than intended.

For example, `CLRF STATUS` will clear bits [4:3] and [1:0], and set the Z bit. This leaves the STATUS register as '`000u u1uu`' (where u = unchanged).

It is recommended, therefore, that only `BCF`, `BSF`, `SWAPF` and `MOVWF` instructions are used to alter the STATUS register, because these instructions do not affect any Status bits. For other instructions not affecting any Status bits, refer to the **"Instruction Set Summary"** chapter.

Important: The C and DC bits operate as $\overline{\text{Borrow}}$ and $\overline{\text{Digit Borrow}}$ out bits, respectively, in subtraction.

9.4 PCL and PCLATH

The Program Counter (PC) is 15 bits wide. The low byte comes from the PCL register, which is a readable and writable register. The high byte (PC[14:8]) is not directly readable or writable and comes from PCLATH. On any Reset, the PC is cleared. Loading of PC in Different Situations shows the five situations for the loading of the PC.

Figure 9-14. Loading of PC in Different Situations

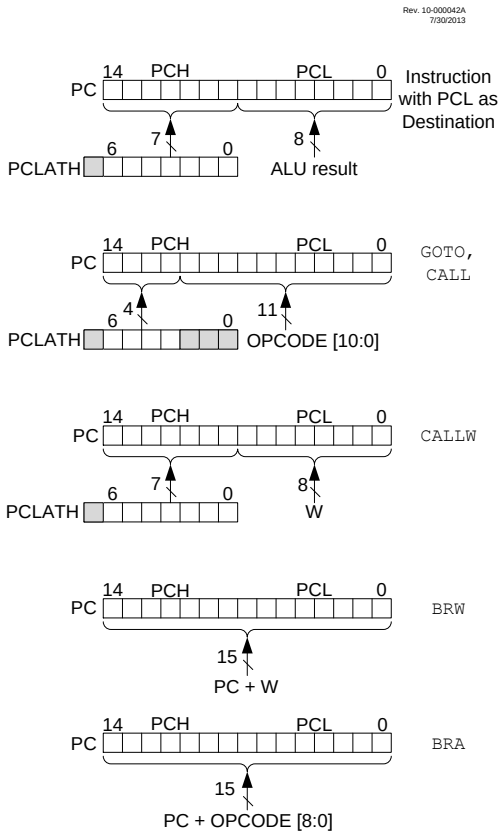

9.4.1 Modifying PCL

Executing any instruction with the PCL register as the destination simultaneously causes the Program Counter PC[14:8] bits (PCH) to be replaced by the contents of the PCLATH register. This allows the entire contents of the Program Counter to be changed by writing the desired upper seven bits to the PCLATH register. When the lower eight bits are written to the PCL register, all 15 bits of the Program Counter will change to the values contained in the PCLATH register and those being written to the PCL register.

9.4.2 Computed GOTO

A computed GOTO is accomplished by adding an offset to the Program Counter (ADDWF PCL). When performing a table read using a computed GOTO method, care has to be exercised if the table location crosses a PCL memory boundary (each 256-byte block). Refer to application note *AN556, "Implementing a Table Read"* (DS00556).

9.4.3 Computed Function Calls

A computed function CALL allows programs to maintain tables of functions and provide another way to execute state machines or Look-up Tables. When performing a table read using a computed function CALL, care has to be exercised if the table location crosses a PCL memory boundary (each 256-byte block).

If using the CALL instruction, the PCH[2:0] and PCL registers are loaded with the operand of the CALL instruction. PCH[6:3] is loaded with PCLATH[6:3].

The CALLW instruction enables computed calls by combining PCLATH and W to form the destination address. A computed CALLW is accomplished by loading the W register with the desired address and executing CALLW. The PCL register is loaded with the value of W and PCH is loaded with PCLATH.

9.4.4 Branching

The branching instructions add an offset to the PC. This allows relocatable code and code that crosses page boundaries. There are two forms of branching, BRW and BRA. The PC will have incremented to fetch the next instruction in both cases. When using either branching instruction, a PCL memory boundary may be crossed.

If using BRW, load the W register with the desired unsigned address and execute BRW. The entire PC will be loaded with the address PC + 1 + W.

If using BRA, the entire PC will be loaded with PC + 1 + the signed value of the operand of the BRA instruction.

9.5 Stack

All devices have a 16-level by 15-bit wide hardware stack. The stack space is not part of either program or data space. The PC is PUSHed onto the stack when the CALL or CALLW instructions are executed or an interrupt causes a branch. The stack is POPed in the event of a RETURN, RETLW or a RETFIE instruction execution. PCLATH is not affected by a PUSH or POP operation.

The stack operates as a circular buffer if the STVREN Configuration bit is programmed to '0'. This means that after the stack has been PUSHed sixteen times, the seventeenth PUSH overwrites the value that was stored from the first PUSH. The eighteenth PUSH overwrites the second PUSH, and so on. The STKOVF and STKUNF flag bits will be set on an Overflow/Underflow, regardless of whether the Reset is enabled.

If the STVREN bit is programmed to '1', the device will be reset if the stack is PUSHed beyond the sixteenth level or POPed beyond the fist level, setting the appropriate bits (STKOVF or STKUNF, respectively).

Important: There are no instructions/mnemonics called PUSH or POP. These are actions that occur from the execution of the CALL, CALLW, RETURN, RETLW and RETFIE instructions or the vectoring to an interrupt address.

9.5.1 Accessing the Stack

The stack is accessible through the TOSH, TOSL and STKPTR registers. STKPTR is the current value of the Stack Pointer. The TOSH:TOSL register pair points to the TOP of the stack. Both registers are read/writable. TOS is split into TOSH and TOSL due to the 15-bit size of the PC. To access the stack, adjust the value of STKPTR, which will position TOSH:TOSL, then read/write to TOSH:TOSL. STKPTR also allows the detection of Overflow and Underflow condition.

Important: Care must be taken when modifying STKPTR while interrupts are enabled.

During normal program operation, CALL, CALLW and interrupts will increment STKPTR, while RETLW, RETURN and RETFIE will decrement STKPTR. STKPTR can be monitored to obtain the value of stack memory left at any given time. STKPTR always points at the currently used place on the stack. Therefore, a CALL or CALLW will increment STKPTR and then write the PC, and a return will unload the PC value from the stack and then decrement STKPTR.

Reference the following figures for examples of accessing the stack.

© 2020-2022 Microchip Technology Inc.
and its subsidiaries

Figure 9-15. Accessing the Stack Example 1

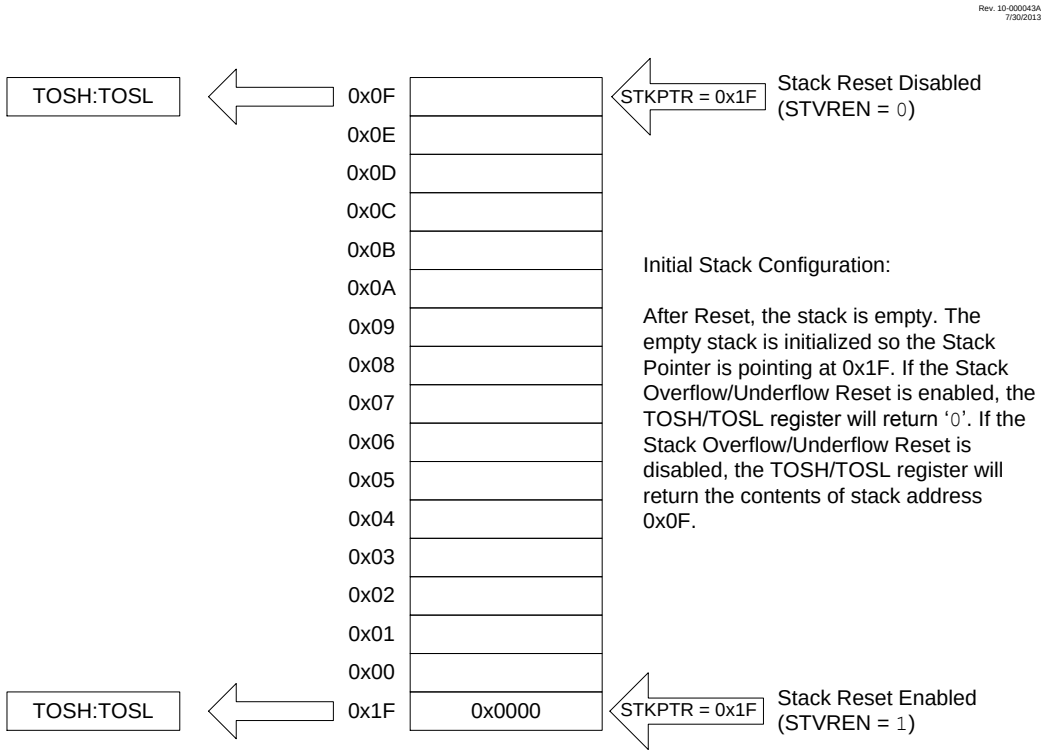

Figure 9-16. Accessing the Stack Example 2

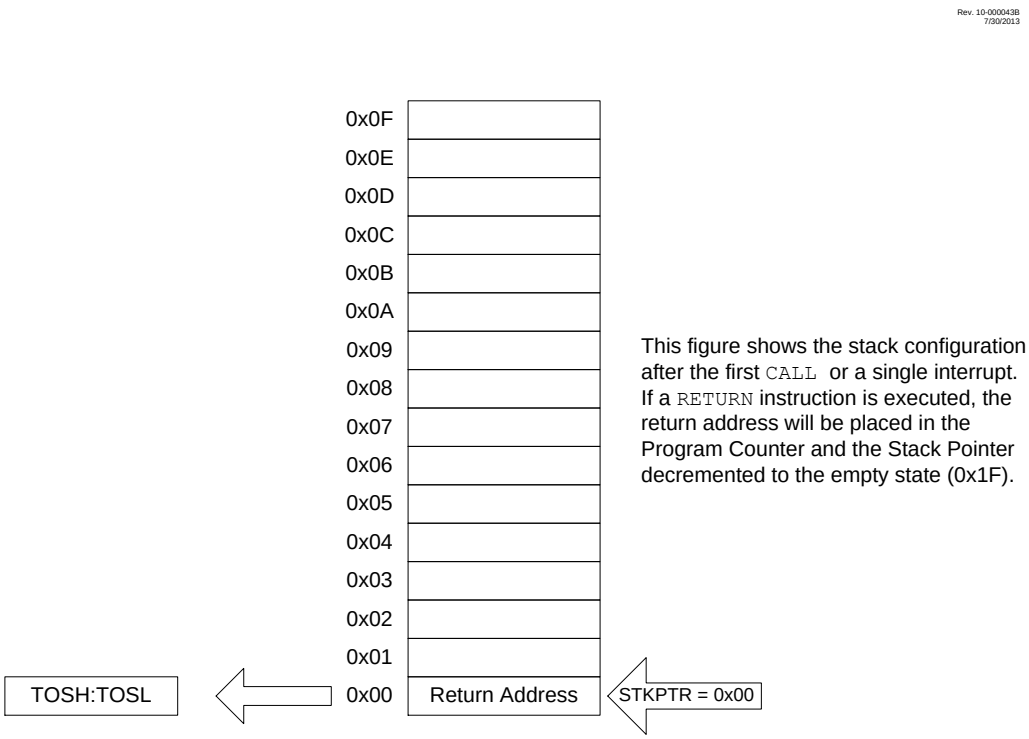

Figure 9-17. Accessing the Stack Example 3

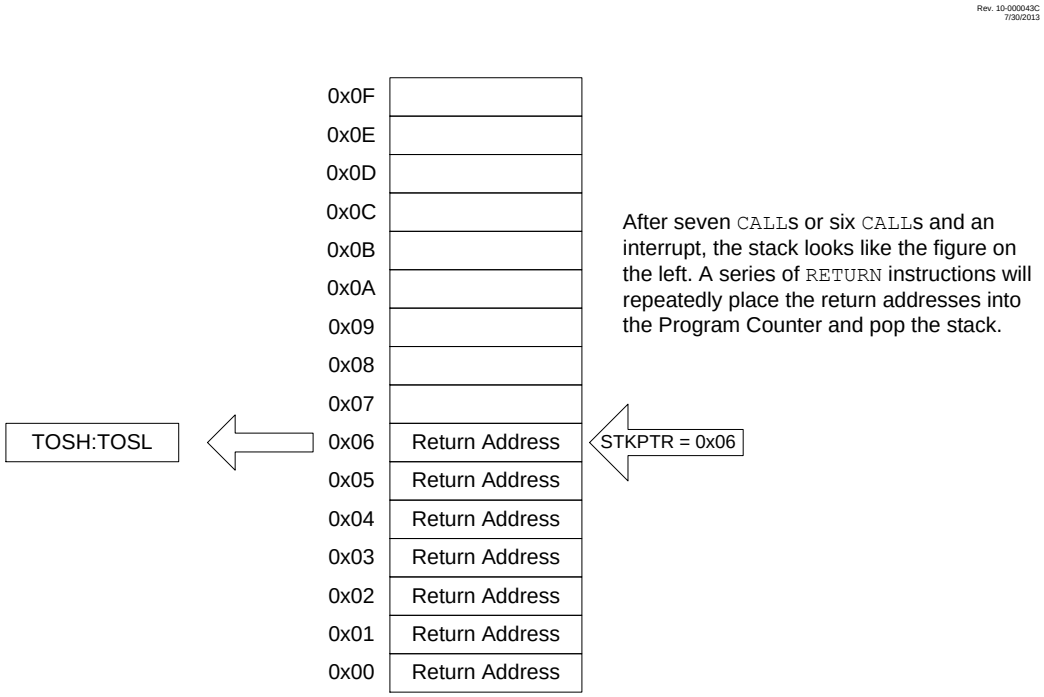

Figure 9-18. Accessing the Stack Example 4

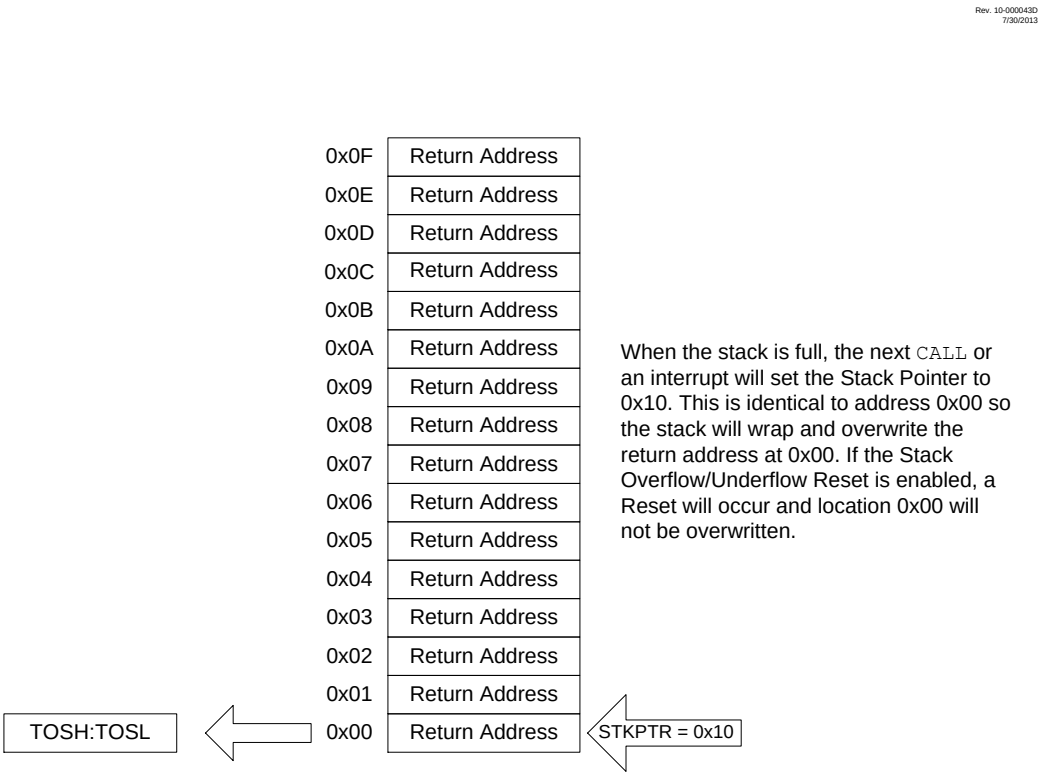

9.5.2 Overflow/Underflow Reset

If the STVREN bit is programmed to '1', the device will be reset if the stack is PUSHed beyond the sixteenth level or POPed beyond the first level, setting the appropriate bits (STKOVF or STKUNF, respectively).

9.6 Indirect Addressing

The INDFn registers are not physical registers. Any instruction that accesses an INDFn register actually accesses the register at the address specified by the File Select Registers (FSR). If the FSRn address specifies one of the two INDFn registers, the read will return '0' and the write will not occur (though Status bits may be affected). The FSRn register value is created by the pair FSRnH and FSRnL.

The FSR registers form a 16-bit address that allows an addressing space with 65536 locations. These locations are divided into three memory regions:

- Traditional/Banked Data Memory
- Linear Data Memory
- Program Flash Memory

Figure 9-19. Indirect Addressing

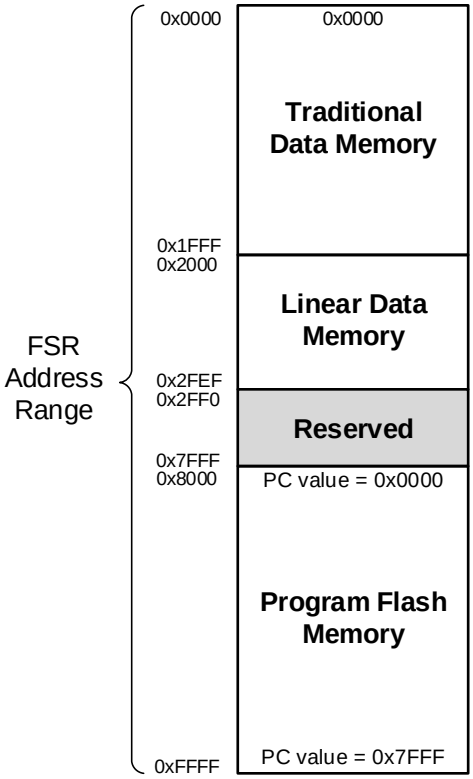

9.6.1 Traditional/Banked Data Memory

The traditional or banked data memory is a region from FSR address 0x0000 to FSR address 0x1FFF. The addresses correspond to the absolute addresses of all SFR, GPR and common registers.

Figure 9-20. Traditional/Banked Data Memory Map

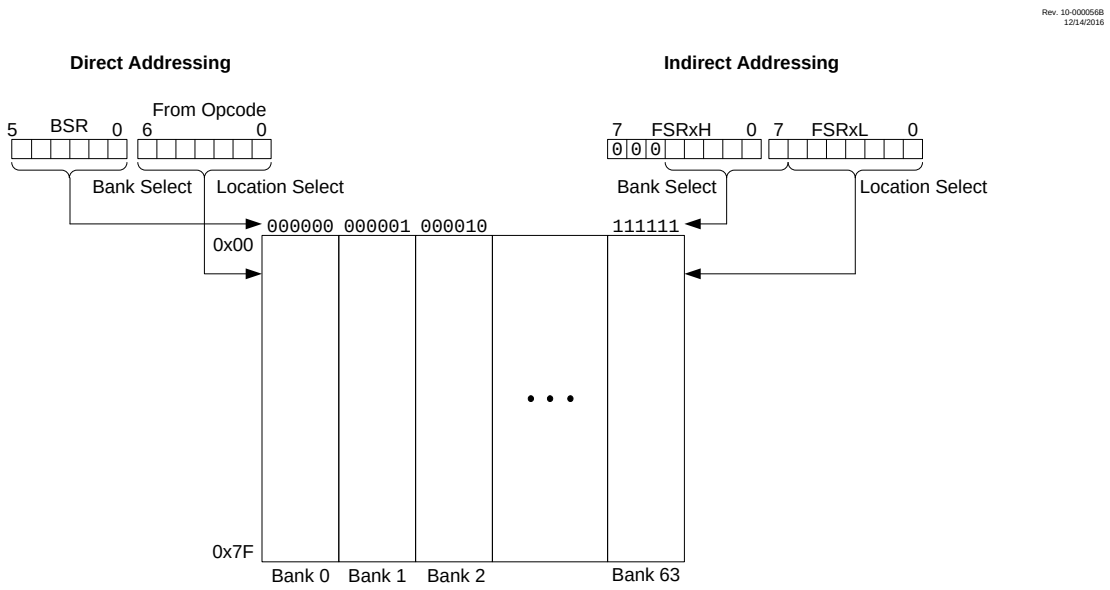

9.6.2 Linear Data Memory

The linear data memory is the region from FSR address 0x2000 to FSR address 0x2FEF. This region is a virtual region that points back to the 80-byte blocks of GPR memory in all the banks. Refer to Figure 9-21 for the Linear Data Memory Map.

Figure 9-21. Linear Data Memory Map

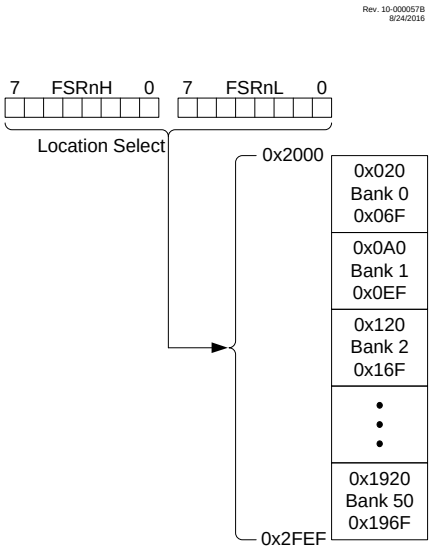

Important: The address range 0x2000 to 0x2FEF represents the complete addressable Linear Data Memory for PIC® devices (up to Bank 50). The actual implemented Linear Data Memory will differ from one device to the other in a family.

Unimplemented memory reads as 0x00. Use of the linear data memory region allows buffers to be larger than 80 bytes because incrementing the FSR beyond one bank will go directly to the GPR memory of the next bank.

The 16 bytes of common memory are not included in the linear data memory region.

9.6.3 Program Flash Memory

To make constant data access easier, the entire Program Flash Memory is mapped to the upper half of the FSR address space. When the MSB of FSRnH is set, the lower 15 bits are the address in program memory which will be accessed through INDF. Only the lower eight bits of each memory location are accessible via INDF. Writing to the Program Flash Memory cannot be accomplished via the FSR/INDF interface. All instructions that access Program Flash Memory via the FSR/INDF interface will require one additional instruction cycle to complete.

Figure 9-22. Program Flash Memory Map

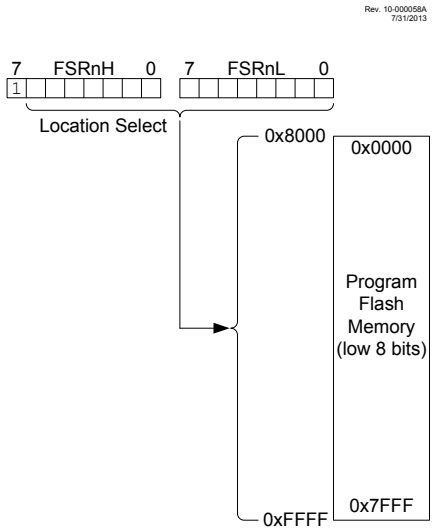

9.7 Register Definitions: Memory Organization

9.7.1 INDF0

Name: INDF0
Offset: 0x0000

Indirect Data Register. This is a virtual register. The GPR/SFR register addressed by the FSR0 register is the target for all operations involving the INDF0 register.

Bit	7	6	5	4	3	2	1	0
	INDF0[7:0]							
Access	R/W	R/W	R/W	R/W	R/W	R/W	R/W	R/W
Reset	0	0	0	0	0	0	0	0

Bits 7:0 – INDF0[7:0]
Indirect data pointed to by the FSR0 register

9.7.2 INDF1

Name: INDF1
Offset: 0x0001

Indirect Data Register. This is a virtual register. The GPR/SFR register addressed by the FSR1 register is the target for all operations involving the INDF1 register.

Bit	7	6	5	4	3	2	1	0
	INDF1[7:0]							
Access	R/W	R/W	R/W	R/W	R/W	R/W	R/W	R/W
Reset	0	0	0	0	0	0	0	0

Bits 7:0 – INDF1[7:0]
Indirect data pointed to by the FSR1 register

9.7.3 PCL

Name: PCL
Offset: 0x0002

Low byte of the Program Counter

Bit	7	6	5	4	3	2	1	0
	PCL[7:0]							
Access	R/W	R/W	R/W	R/W	R/W	R/W	R/W	R/W
Reset	0	0	0	0	0	0	0	0

Bits 7:0 – PCL[7:0]
Provides direct read and write access to the Program Counter

9.7.4 STATUS

Name: STATUS
Offset: 0x0003

Status Register

Bit	7	6	5	4	3	2	1	0
				$\overline{TO}$	$\overline{PD}$	Z	DC	C
Access				R	R	R/W	R/W	R/W
Reset				1	1	0	0	0

Bit 4 – $\overline{TO}$ Time-Out
Reset States: POR/BOR = 1
All Other Resets = q

Value	Description
1	Set at power-up or by execution of `CLRWDT` or `SLEEP` instruction
0	A WDT time-out occurred

Bit 3 – $\overline{PD}$ Power-Down
Reset States: POR/BOR = 1
All Other Resets = q

Value	Description
1	Set at power-up or by execution of `CLRWDT` instruction
0	Cleared by execution of the `SLEEP` instruction

Bit 2 – Z Zero
Reset States: POR/BOR = 0
All Other Resets = u

Value	Description
1	The result of an arithmetic or logic operation is zero
0	The result of an arithmetic or logic operation is not zero

Bit 1 – DC Digit Carry/$\overline{Borrow}$[(1)]
`ADDWF`, `ADDLW`, `SUBLW`, `SUBWF` instructions
Reset States: POR/BOR = 0
All Other Resets = u

Value	Description
1	A carry-out from the 4th low-order bit of the result occurred
0	No carry-out from the 4th low-order bit of the result

Bit 0 – C Carry/$\overline{Borrow}$[(1)]
`ADDWF`, `ADDLW`, `SUBLW`, `SUBWF` instructions
Reset States: POR/BOR = 0
All Other Resets = u

Value	Description
1	A carry-out from the Most Significant bit of the result occurred
0	No carry-out from the Most Significant bit of the result occurred

Note:

1. For $\overline{Borrow}$, the polarity is reversed. A subtraction is executed by adding the two's complement of the second operand. For Rotate (`RRCF`, `RLCF`) instructions, this bit is loaded with either the high or low-order bit of the Source register.

9.7.5 FSR0

Name: FSR0
Offset: 0x0004

Indirect Address Register

The FSR0 value is the address of the data to which the INDF0 register points.

Bit	15	14	13	12	11	10	9	8
	FSR0[15:8]							
Access	R/W	R/W	R/W	R/W	R/W	R/W	R/W	R/W
Reset	0	0	0	0	0	0	0	0

Bit	7	6	5	4	3	2	1	0
	FSR0[7:0]							
Access	R/W	R/W	R/W	R/W	R/W	R/W	R/W	R/W
Reset	0	0	0	0	0	0	0	0

Bits 15:0 – FSR0[15:0] Address of INDF0 data

Notes: The individual bytes in this multibyte register can be accessed with the following register names:
1. FSR0H: Accesses the high byte FSR0[15:8].
2. FSR0L: Accesses the low byte FSR0[7:0].

9.7.6 FSR1

Name: FSR1
Offset: 0x0006

Indirect Address Register

The FSR1 value is the address of the data to which the INDF1 register points.

Bit	15	14	13	12	11	10	9	8
	FSR1[15:8]							
Access	R/W	R/W	R/W	R/W	R/W	R/W	R/W	R/W
Reset	0	0	0	0	0	0	0	0

Bit	7	6	5	4	3	2	1	0
	FSR1[7:0]							
Access	R/W	R/W	R/W	R/W	R/W	R/W	R/W	R/W
Reset	0	0	0	0	0	0	0	0

Bits 15:0 – FSR1[15:0]
Address of INDF1 data

Notes: The individual bytes in this multibyte register can be accessed with the following register names:

1. FSR1H: Accesses the high byte FSR1[15:8].
2. FSR1L: Accesses the low byte FSR1[7:0].

9.7.7 BSR

Name: BSR
Offset: 0x0008

Bank Select Register
The BSR indicates the data memory bank by writing the bank number into the register. All data memory can be accessed directly via instructions, or indirectly via FSRs.

Bit	7	6	5	4	3	2	1	0
			BSR[5:0]					
Access			R/W	R/W	R/W	R/W	R/W	R/W
Reset			0	0	0	0	0	0

Bits 5:0 – BSR[5:0]
Six Most Significant bits of the data memory address

9.7.8 WREG

Name: WREG
Offset: 0x0009

Working Data Register

Bit	7	6	5	4	3	2	1	0
	WREG[7:0]							
Access	R/W	R/W	R/W	R/W	R/W	R/W	R/W	R/W
Reset	0	0	0	0	0	0	0	0

Bits 7:0 – WREG[7:0]

9.7.9 PCLATH

Name: PCLATH
Offset: 0x000A

Program Counter Latches

Write Buffer for the upper seven bits of the Program Counter

Bit	7	6	5	4	3	2	1	0
		PCLATH[6:0]						
Access		R/W	R/W	R/W	R/W	R/W	R/W	R/W
Reset		0	0	0	0	0	0	0

Bits 6:0 – PCLATH[6:0] High PC Latch Register
Holding register for Program Counter bits [6:0]

9.8 Register Summary - Memory Organization

Offset	Name	Bit Pos.	7	6	5	4	3	2	1	0
0x00	INDF0	7:0	INDF0[7:0]							
0x01	INDF1	7:0	INDF1[7:0]							
0x02	PCL	7:0	PCL[7:0]							
0x03	STATUS	7:0				$\overline{TO}$	$\overline{PD}$	Z	DC	C
0x04	FSR0	7:0	FSR0[7:0]							
		15:8	FSR0[15:8]							
0x06	FSR1	7:0	FSR1[7:0]							
		15:8	FSR1[15:8]							
0x08	BSR	7:0			BSR[5:0]					
0x09	WREG	7:0	WREG[7:0]							
0x0A	PCLATH	7:0		PCLATH[6:0]						

10. Resets

There are multiple ways to reset this device:

- Power-on Reset (POR)
- Brown-out Reset (BOR)
- $\overline{\text{MCLR}}$ Reset
- WDT Reset
- RESET instruction
- Stack Overflow
- Stack Underflow
- Programming mode exit

To allow V_{DD} to stabilize, an optional Power-up Timer can be enabled to extend the Reset time after a BOR or POR event.

A simplified block diagram of the On-Chip Reset Circuit is shown in Figure 10-1.

Figure 10-1. Simplified Block Diagram of On-Chip Reset Circuit

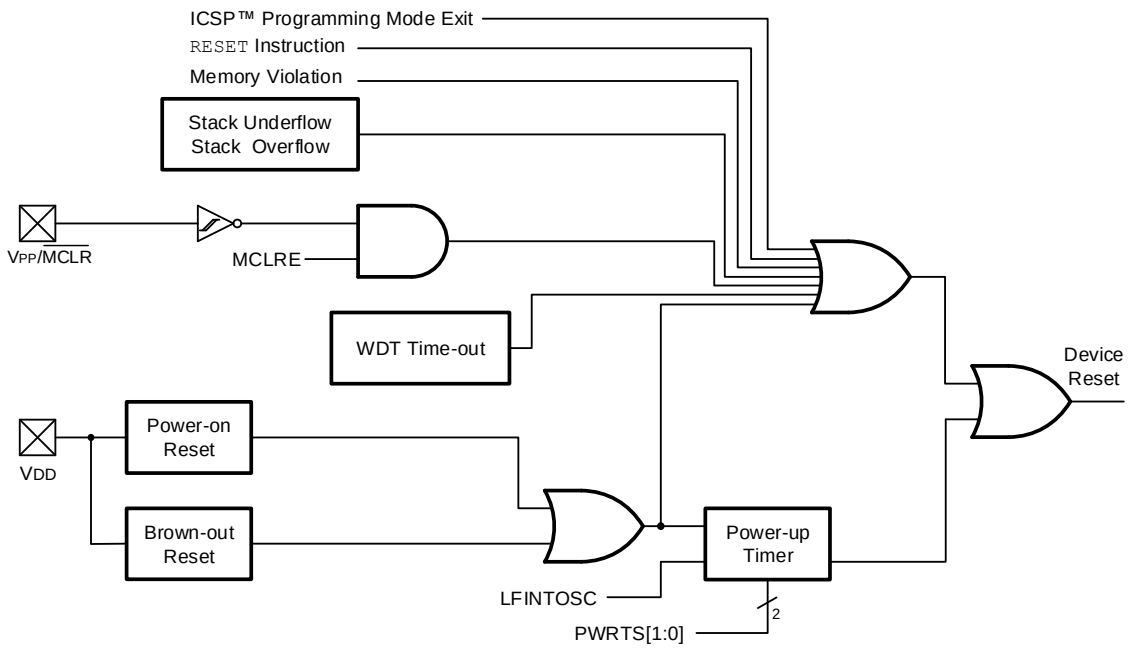

10.1 Power-on Reset (POR)

The POR circuit holds the device in Reset until V_{DD} has reached an acceptable level for minimum operation. Slow rising V_{DD}, fast operating speeds or analog performance may require greater than minimum V_{DD}. The PWRT, BOR or $\overline{\text{MCLR}}$ features can be used to extend the start-up period until all device operation conditions have been met.

10.1.1 Programming Mode Exit

Upon exit of Programming mode, the device will behave as if a POR had just occurred.

10.2 Brown-out Reset (BOR)

The BOR circuit holds the device in Reset when V_{DD} reaches a selectable minimum level. Between the POR and BOR, complete voltage range coverage for execution protection can be implemented.

The Brown-out Reset module has four operating modes controlled by the BOREN bits. The four operating modes are:

- BOR is always on
- BOR is off when in Sleep
- BOR is controlled by software
- BOR is always off

Refer to Table 10-1 for more information.

The Brown-out Reset voltage level is selectable by configuring the BORV bits.

A V_{DD} noise rejection filter prevents the BOR from triggering on small events. If V_{DD} falls below V_{BOR} for a duration greater than parameter T_{BORDC}, the device will reset and the $\overline{BOR}$ bit will be cleared, indicating the Brown-out Reset condition occurred. See Figure 10-2.

10.2.1 BOR Is Always On

When the BOREN bits are programmed to '11', the BOR is always on. The device start-up will be delayed until the BOR is ready and V_{DD} is higher than the BOR threshold.

BOR protection is active during Sleep. The BOR does not delay wake-up from Sleep.

10.2.2 BOR Is Off in Sleep

When the BOREN bits are programmed to '10', the BOR is on, except in Sleep. BOR protection is not active during Sleep, but device wake-up will be delayed until the BOR can determine that V_{DD} is higher than the BOR threshold. The device wake-up will be delayed until the BOR is ready.

10.2.3 BOR Controlled by Software

When the BOREN bits of Configuration Words are programmed to '01', the BOR is controlled by the SBOREN bit. The device start-up is not delayed by the BOR Ready condition or the V_{DD} level.

BOR protection begins as soon as the BOR circuit is ready. The status of the BOR circuit is reflected in the BORRDY bit.

BOR protection is unchanged by Sleep.

Table 10-1. BOR Operating Modes

BOREN	SBOREN	Device Mode	BOR Mode	Instruction Execution upon:	
				Release of POR	Wake-up from Sleep
11[(1)]	X	X	Active	Wait for release of BOR (BORRDY = 1)	Begins immediately
10	X	Awake	Active	Wait for release of BOR (BORRDY = 1)	N/A
		Sleep	Hibernate	N/A	Wait for release of BOR (BORRDY = 1)
01	1	X	Active	Wait for release of BOR (BORRDY = 1)	Begins immediately
	0	X	Hibernate		
00	X	X	Disabled	Begins immediately	

Note:

1. In this specific case, 'Release of POR' and 'Wake-up from Sleep', there is no delay in start-up. The BOR Ready flag (BORRDY = 1) will be set before the CPU is ready to execute instructions because the BOR circuit is forced on by the BOREN bits.

Figure 10-2. Brown-Out Situations

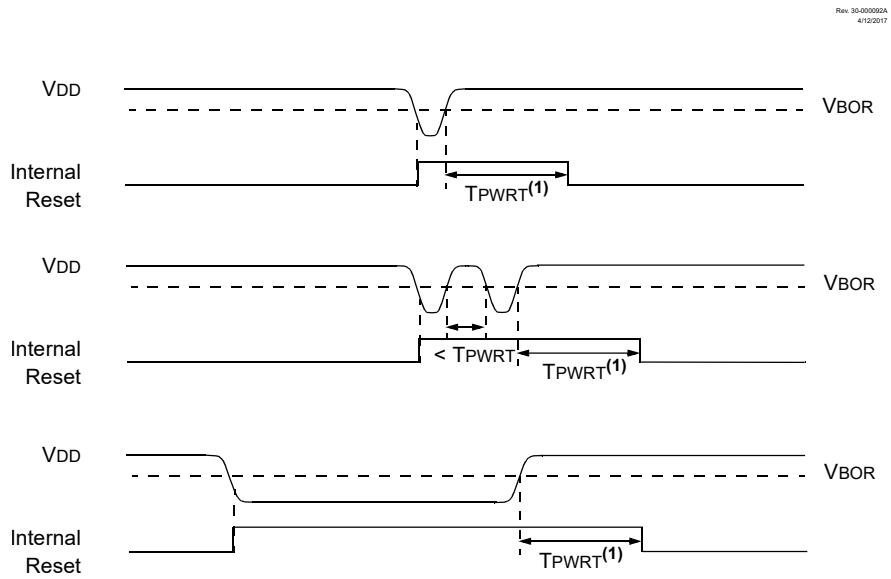

Note: T_{PWRT} delay when the PWRTS bits are enabled ($\overline{PWRTS}$!= 00).

10.2.4 BOR Is Always Off

When the BOREN bits are programmed to '00', the BOR is always disabled. In the configuration, setting the SBOREN bit will have no affect on BOR operations.

10.3 $\overline{MCLR}$ Reset

The $\overline{MCLR}$ is an optional external input that can reset the device. The $\overline{MCLR}$ function is controlled by the MCLRE bit and the LVP bit (see Table 10-2). The $\overline{RMCLR}$ bit will be set to '0' if a $\overline{MCLR}$ has occurred.

Table 10-2. $\overline{MCLR}$ Configuration

MCLRE	LVP	$\overline{MCLR}$
x	1	Enabled
1	0	Enabled
0	0	Disabled

10.3.1 $\overline{MCLR}$ Enabled

When $\overline{MCLR}$ is enabled and the pin is held low, the device is held in Reset. The $\overline{MCLR}$ pin is connected to V_{DD} through an internal weak pull-up.

The device has a noise filter in the $\overline{MCLR}$ Reset path. The filter will detect and ignore small pulses.

Important: An internal Reset event (RESET instruction, BOR, WDT, POR, STKOVF, STKUNF) does not drive the $\overline{MCLR}$ pin low.

10.3.2 $\overline{\text{MCLR}}$ Disabled

When $\overline{\text{MCLR}}$ is disabled, the $\overline{\text{MCLR}}$ becomes input-only and pin functions such as internal weak pull-ups are under software control.

10.4 Watchdog Timer (WDT) Reset

The Watchdog Timer generates a Reset if the firmware does not issue a `CLRWDT` instruction within the time-out period. The TO, PD and $\overline{\text{RWDT}}$ bits are changed to indicate a WDT Reset caused by the timer overflowing.

10.5 `RESET` Instruction

A `RESET` instruction will cause a device Reset. The $\overline{\text{RI}}$ bit will be set to '`0`'. See Table 10-4 for default conditions after a `RESET` instruction has occurred.

10.6 Stack Overflow/Underflow Reset

The device can reset when the Stack Overflows or Underflows. The STKOVF or STKUNF bits indicate the Reset condition. These Resets are enabled by setting the STVREN bit.

10.7 Power-Up Timer (PWRT)

The Power-up Timer provides up to a 64 ms time-out period on POR or BOR. The device is held in Reset as long as PWRT is active. The PWRT delay allows additional time for the V_{DD} to rise to an acceptable level.

The Power-up Timer is controlled by the PWRTS bits. The Power-up Timer starts after the release of the POR and BOR. For additional information, refer to the "Power-up Trouble Shooting" Application Note AN607.

10.8 Start-Up Sequence

Upon the release of a POR or BOR, the following must occur before the device will begin executing:

1. Power-up Timer runs to completion (if enabled).
2. $\overline{\text{MCLR}}$ must be released (if enabled).

The Power-up Timer runs independently of $\overline{\text{MCLR}}$ Reset. If $\overline{\text{MCLR}}$ is kept low long enough, the Power-up Timer will expire. Upon bringing $\overline{\text{MCLR}}$ high, the device will begin execution after 10 F_{OSC} cycles (see Figure 10-3). This is useful for testing purposes or for synchronizing more than one device operating in parallel.

Figure 10-3. Reset Start-Up Sequence

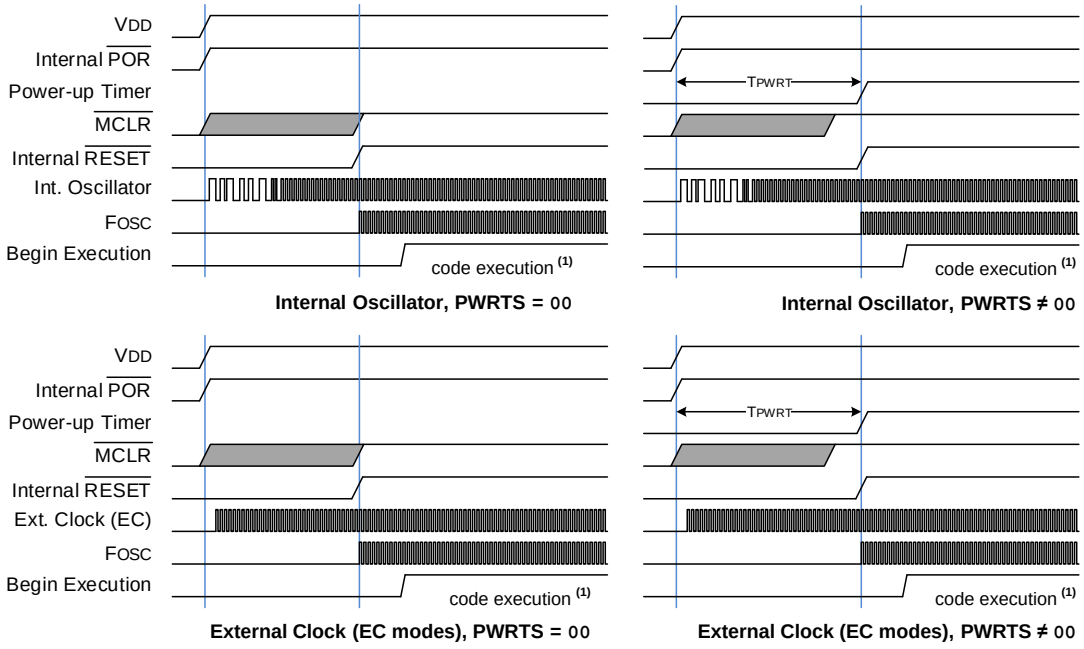

Note:

1. Code execution begins 10 F_{OSC} cycles after the F_{OSC} clock is released.

10.9 Memory Execution Violation

A memory execution violation Reset occurs if executing an instruction being fetched from outside the valid execution area. The invalid execution areas are:

1. Addresses outside implemented program memory. Refer to the **"Memory Organization"** chapter for details about available Flash size.
2. Storage Area Flash (SAF) inside program memory, if enabled.

When a memory execution violation is generated, the device is reset and the $\overline{\text{MEMV}}$ bit is cleared to signal the cause of the Reset. The $\overline{\text{MEMV}}$ bit must be set in the user code after a memory execution violation Reset has occurred to detect further violation Resets.

10.10 Determining the Cause of a Reset

Upon any Reset, multiple bits in the STATUS, PCON0 and PCON1 registers are updated to indicate the cause of the Reset. The following tables show the Reset conditions of these registers.

Table 10-3. Reset Status Bits and Their Significance

STKOVF	STKUNF	$\overline{\text{RWDT}}$	$\overline{\text{RMCLR}}$	$\overline{\text{RI}}$	$\overline{\text{POR}}$	$\overline{\text{BOR}}$	$\overline{\text{TO}}$	$\overline{\text{PD}}$	$\overline{\text{MEMV}}$	Condition
0	0	1	1	1	0	x	1	1	1	Power-on Reset
0	0	1	1	1	0	x	0	x	u	Illegal, $\overline{\text{TO}}$ is set on POR
0	0	1	1	1	0	x	x	0	u	Illegal, $\overline{\text{PD}}$ is set on POR

.....continued

STKOVF	STKUNF	$\overline{RWDT}$	$\overline{RMCLR}$	$\overline{RI}$	$\overline{POR}$	$\overline{BOR}$	$\overline{TO}$	$\overline{PD}$	$\overline{MEMV}$	Condition
0	0	u	1	1	u	0	1	1	u	Brown-out Reset
u	u	0	u	u	u	u	0	u	u	WDT Reset
u	u	u	u	u	u	u	0	0	u	WDT Wake-up from Sleep
u	u	u	u	u	u	u	1	0	u	Interrupt Wake-up from Sleep
u	u	u	0	u	u	u	u	u	1	$\overline{MCLR}$ Reset during normal operation
u	u	u	0	u	u	u	1	0	u	$\overline{MCLR}$ Reset during Sleep
u	u	u	u	0	u	u	u	u	u	RESET Instruction Executed
1	u	u	u	u	u	u	u	u	u	Stack Overflow Reset (STVREN = 1)
u	1	u	u	u	u	u	u	u	u	Stack Underflow Reset (STVREN = 1)
u	u	u	u	u	u	u	u	u	0	Memory Violation Reset

Table 10-4. Reset Conditions for Special Registers

Condition	Program Counter	STATUS Register	PCON0 Register	PCON1 Register
Power-on Reset	0	---1 1000	0011 110x	---- --1-
Brown-out Reset	0	---1 1000	0011 11u0	---- --u-
$\overline{MCLR}$ Reset during normal operation	0	-uuu uuuu	uuuu 0uuu	---- --1-
$\overline{MCLR}$ Reset during Sleep	0	---1 0uuu	uuuu 0uuu	---- --u-
WDT Time-out Reset	0	---0 uuuu	uuu0 uuuu	---- --u-
WDT Wake-up from Sleep	PC + 1	---0 0uuu	uuuu uuuu	---- --u-
Interrupt Wake-up from Sleep	PC + 1[(1)]	---1 0uuu	uuuu uuuu	---- --u-
RESET Instruction Executed	0	---u uuuu	uuuu u0uu	---- --u-
Stack Overflow Reset (STVREN = 1)	0	---u uuuu	1uuu uuuu	---- --u-
Stack Underflow Reset (STVREN = 1)	0	---u uuuu	u1uu uuuu	---- --u-
Memory Violation Reset	0	-uuu uuuu	uuuu uuuu	---- --0-

Legend: u = unchanged, x = unknown, — = unimplemented bit, reads as '0'.

Note:

1. When the wake-up is due to an interrupt and Global Interrupt Enable (GIE) bit is set, the return address is pushed on the stack and PC is loaded with the interrupt vector (0004h) after execution of PC + 1.

10.11 Power Control (PCONx) Register

The Power Control (PCONx) registers contain flag bits to differentiate between a:

- Brown-out Reset ($\overline{\text{BOR}}$)
- Power-on Reset ($\overline{\text{POR}}$)
- `RESET` Instruction Reset ($\overline{\text{RI}}$)
- $\overline{\text{MCLR}}$ Reset ($\overline{\text{RMCLR}}$)
- Watchdog Timer Reset ($\overline{\text{RWDT}}$)
- Stack Underflow Reset (STKUNF)
- Stack Overflow Reset (STKOVF)
- Memory Violation Reset ($\overline{\text{MEMV}}$)

Hardware will change the corresponding register bit during the Reset process; if the Reset was not caused by the condition, the bit remains unchanged.

Software may reset the bit to the Inactive state after restart (hardware will not reset the bit).

Software may also set any PCONx bit to the Active state, so that user code may be tested, but no Reset action will be generated.

10.12 Register Definitions: Power Control

10.12.1 BORCON

Name: BORCON
Offset: 0x811

Brown-out Reset Control Register

Bit	7	6	5	4	3	2	1	0
	SBOREN							BORRDY
Access	R/W							R
Reset	1							q

Bit 7 – SBOREN Software Brown-Out Reset Enable
Reset States: POR/BOR = 1
All Other Resets = u

Value	Condition	Description
—	If BOREN ≠ 01	SBOREN is read/write, but has no effect on the BOR
1	If BOREN = 01	BOR Enabled
0	If BOREN = 01	BOR Disabled

Bit 0 – BORRDY Brown-Out Reset Circuit Ready Status
Reset States: POR/BOR = q
All Other Resets = u

Value	Description
1	The Brown-out Reset circuit is active and armed
0	The Brown-out Reset circuit is disabled or is warming up

10.12.2 PCON0

Name: PCON0
Offset: 0x813

Power Control Register 0

Bit	7	6	5	4	3	2	1	0
	STKOVF	STKUNF		$\overline{\text{RWDT}}$	$\overline{\text{RMCLR}}$	$\overline{\text{RI}}$	$\overline{\text{POR}}$	$\overline{\text{BOR}}$
Access	R/W/HS	R/W/HS		R/W/HC	R/W/HC	R/W/HC	R/W/HC	R/W/HC
Reset	0	0		1	1	1	0	q

Bit 7 – STKOVF Stack Overflow Flag
Reset States: POR/BOR = 0
All Other Resets = q

Value	Description
1	A Stack Overflow occurred (more `CALL`s than fit on the stack)
0	A Stack Overflow has not occurred or set to '`0`' by firmware

Bit 6 – STKUNF Stack Underflow Flag
Reset States: POR/BOR = 0
All Other Resets = q

Value	Description
1	A Stack Underflow occurred (more `RETURN`s than `CALL`s)
0	A Stack Underflow has not occurred or set to '`0`' by firmware

Bit 4 – $\overline{\text{RWDT}}$ WDT Reset Flag
Reset States: POR/BOR = 1
All Other Resets = q

Value	Description
1	A WDT Overflow/Time-out Reset has not occurred or set to '`1`' by firmware
0	A WDT Overflow/Time-out Reset has occurred (set to '`0`' in hardware when a WDT Reset occurs)

Bit 3 – $\overline{\text{RMCLR}}$ $\overline{\text{MCLR}}$ Reset Flag
Reset States: POR/BOR = 1
All Other Resets = q

Value	Description
1	A $\overline{\text{MCLR}}$ Reset has not occurred or set to '`1`' by firmware
0	A $\overline{\text{MCLR}}$ Reset has occurred (set to '`0`' in hardware when a $\overline{\text{MCLR}}$ Reset occurs)

Bit 2 – $\overline{\text{RI}}$ `RESET` Instruction Flag
Reset States: POR/BOR = 1
All Other Resets = q

Value	Description
1	A `RESET` instruction has not been executed or set to '`1`' by firmware
0	A `RESET` instruction has been executed (set to '`0`' in hardware upon executing a `RESET` instruction)

Bit 1 – $\overline{\text{POR}}$ Power-on Reset Status
Reset States: POR/BOR = 0
All Other Resets = u

Value	Description
1	No Power-on Reset occurred or set to '`1`' by firmware
0	A Power-on Reset occurred (set to '`0`' in hardware when a Power-on Reset occurs)

Bit 0 – $\overline{\text{BOR}}$ Brown-out Reset Status
Reset States: POR/BOR = q

All Other Resets = u

Value	Description
1	No Brown-out Reset occurred or set to '1' by firmware
0	A Brown-out Reset occurred (set to '0' in hardware when a Brown-out Reset occurs)

10.12.3 PCON1

Name: PCON1
Offset: 0x814

Power Control Register 1

Bit	7	6	5	4	3	2	1	0
							$\overline{\text{MEMV}}$	
Access							R/W/HC	
Reset							1	

Bit 1 – $\overline{\text{MEMV}}$ Memory Violation Flag
Reset States: POR/BOR = 1
All Other Resets = u

Value	Description
1	No Memory Violation Reset occurred or set to '1' by firmware
0	A Memory Violation Reset occurred (set to '0' in hardware when a Memory Violation occurs)

10.13 Register Summary - Power Control

Offset	Name	Bit Pos.	7	6	5	4	3	2	1	0
0x00 ... 0x0810	Reserved									
0x0811	BORCON	7:0	SBOREN							BORRDY
0x0812	Reserved									
0x0813	PCON0	7:0	STKOVF	STKUNF		$\overline{\text{RWDT}}$	$\overline{\text{RMCLR}}$	$\overline{\text{RI}}$	$\overline{\text{POR}}$	$\overline{\text{BOR}}$
0x0814	PCON1	7:0							$\overline{\text{MEMV}}$	

11. OSC - Oscillator Module

11.1 Oscillator Module Overview

The oscillator module contains multiple clock sources and selection features that allow it to be used in a wide range of applications while maximizing performance and minimizing power consumption.

Clock sources can be supplied either internally or externally. External sources include:

- External Clock (EC) oscillators

Internal sources include:

- High-Frequency Internal Oscillator (HFINTOSC)
- Low-Frequency Internal Oscillator (LFINTOSC)
- Analog-to-Digital Converter RC Oscillator (ADCRC)

Special features of the oscillator module include:

- HFINTOSC Frequency Adjustment: Provides the ability to adjust the HFINTOSC frequency.

The Reset Oscillator (RSTOSC) Configuration bits determine the type of oscillator that will be used when the device runs after a Reset, including when the device is first powered up (see the table below).

Table 11-1. RSTOSC Selection Table

RSTOSC	SFR Reset Values		Clock Source
	COSC	OSCFRQ	
11	11	000	EXTOSC per FEXTOSC
10	10		HFINTOSC @ 1 MHz
01	01		LFINTOSC
00	00	101	HFINTOSC @ 32 MHz

If an external clock source is selected by the RSTOSC bits, the External Oscillator Mode Select (FEXTOSC) Configuration bits must be used to select the external clock mode. These modes include:

- ECL: External Clock Low Power mode
- ECH: External Clock High Power mode

The ECH and ECL modes rely on an external logic-level signal as the device clock source. Each mode is optimized for a specific frequency range. The internal oscillator block produces both low-frequency and high-frequency clock signals, designated LFINTOSC and HFINTOSC, respectively. Multiple system operating frequencies may be derived from these clock sources.

Figure 11-1 illustrates a block diagram of the oscillator module.

Figure 11-1. Clock Source Block Diagram

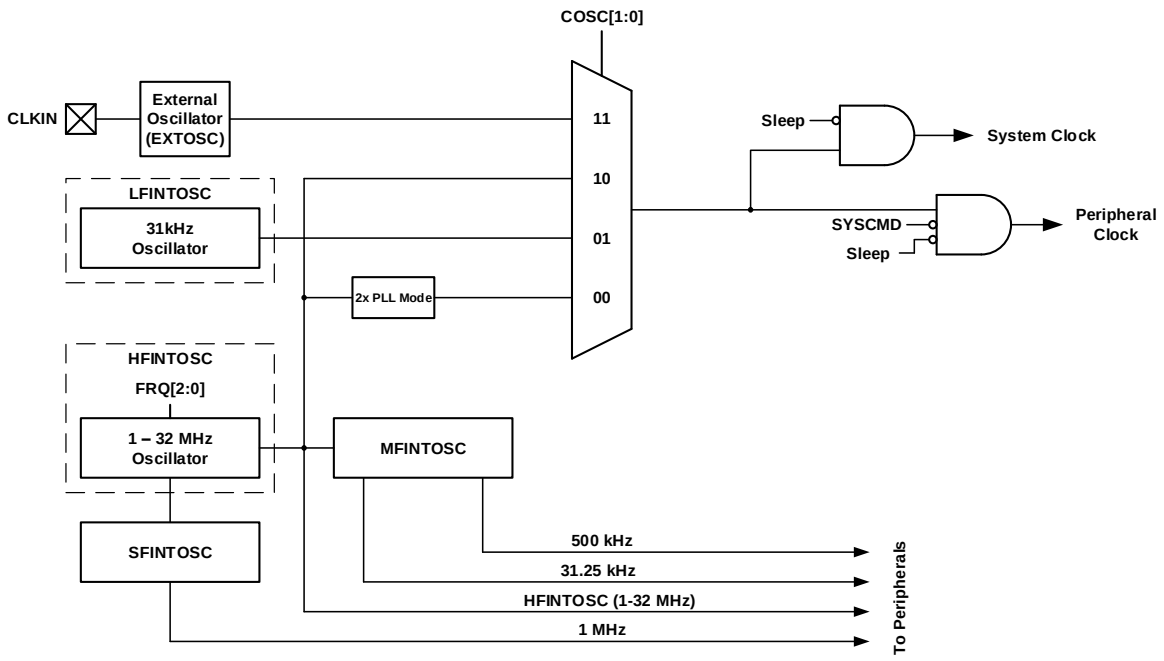

11.2 Clock Source Types

Clock sources can be classified as external or internal.

External clock sources rely on external circuitry for the clock source to function, such as digital oscillator modules.

Internal clock sources are contained within the oscillator module. The internal oscillator block features two internal oscillators that are used to generate internal system clock sources. The High-Frequency Internal Oscillator (HFINTOSC) can produce a wide range of frequencies which are determined via the HFINTOSC Frequency Selection (OSCFRQ) register. The Low-Frequency Internal Oscillator (LFINTOSC) generates a fixed nominal 31 kHz clock signal. The internal oscillator block also features an RC oscillator (ADCRC) which is dedicated to the Analog-to-Digital Converter (ADC).

Important: The PIC16F152 microcontroller family does not allow the system clock source to be changed through clock switching. Once the RSTOSC Configuration bits select the oscillator source, the source cannot be changed via software. If the HFINTOSC is selected as the clock source, the HFINTOSC frequency may be changed by modifying the FRQ bits.

The instruction clock ($F_{OSC}/4$) can be routed to the CLKOUT pin when the pin is not in use. The Clock Out Enable ($\overline{\text{CLKOUTEN}}$) Configuration bit controls the functionality of the CLKOUT signal. When $\overline{\text{CLKOUTEN}}$ is clear ($\overline{\text{CLKOUTEN}}$ = `0`), the CLKOUT signal is routed to the CLKOUT pin. When $\overline{\text{CLKOUTEN}}$ is set ($\overline{\text{CLKOUTEN}}$ = `1`), the CLKOUT pin functions as an I/O pin.

11.2.1 External Clock Sources

An external clock source can be used as the device system clock by performing the following actions:

- Program the RSTOSC Configuration bits to select the external clock source (RSTOSC = `111`)

- Program the FEXTOSC Configuration bits to select the appropriate External Clock (EC) mode:
  - ECH mode for oscillators operating at or above 16 MHz (FEXTOSC = 11)
  - ECL mode for oscillator operating below 16 MHz (FEXTOSC = 01)

11.2.1.1 EC Mode

The External Clock (EC) mode allows an externally generated logic level signal to be the system clock source. When operating in EC mode, an external clock source is connected to the CLKIN input pin. The CLKOUT pin is available as a general purpose I/O pin or as the CLKOUT signal pin.

EC mode provides two Power mode selections:

- ECH: High Power mode (16 MHz and above)
- ECL: Low Power mode (below 16 MHz)

When EC mode is selected, there is no delay in operation after a Power-on Reset (POR) or wake-up from Sleep. Because the PIC® MCU design is fully static, stopping the external clock input will have the effect of halting the device while leaving all data intact. Upon restarting the external clock, the device will resume operation as if no time had elapsed.

Figure 11-2 shows the pin connections for EC mode.

Figure 11-2. External Clock (EC) Mode Operation

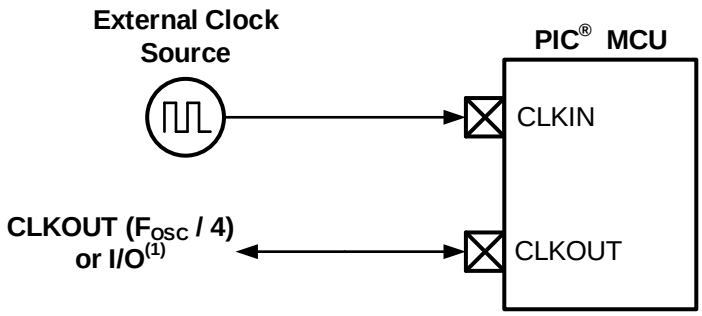

Note:

1. Output depends on the setting of the $\overline{\text{CLKOUTEN}}$ Configuration bit.

11.2.2 Internal Clock Sources

The internal oscillator block contains two independent oscillators that can produce two internal system clock sources:

- High-Frequency Internal Oscillator (HFINTOSC)
- Low-Frequency Internal Oscillator (LFINTOSC)

An internal oscillator source can be used as the device system clock by programming the RSTOSC Configuration bits to select one of the INTOSC sources.

In INTOSC mode, the CLKIN and CLKOUT pins are available for use as general purpose I/Os, provided that no external oscillator is connected. The function of the CLKOUT pin is determined by the $\overline{\text{CLKOUTEN}}$ Configuration bit. When $\overline{\text{CLKOUTEN}}$ is set ($\overline{\text{CLKOUTEN}}$ = 1), the pin functions as a general purpose I/O. When $\overline{\text{CLKOUTEN}}$ is clear ($\overline{\text{CLKOUTEN}}$ = 0), the system instruction clock ($F_{OSC}/4$) is available as an output signal on the pin.

11.2.2.1 HFINTOSC

The High-Frequency Internal Oscillator (HFINTOSC) is a factory-calibrated, precision digitally-controlled internal clock source that produces a wide range of stable clock frequencies. The HFINTOSC can be enabled by programming the RSTOSC Configuration bits to select the one of two HFINTOSC options upon device Reset or power-up.

The HFINTOSC frequency is selected via the HFINTOSC Frequency Selection (FRQ) bits. Fine-tuning of the HFINTOSC is done via the HFINTOSC Frequency Tuning (TUN) bits.

11.2.2.1.1 HFINTOSC Frequency Tuning

The HFINTOSC frequency can be fine-tuned via the HFINTOSC Frequency Tuning Register (OSCTUNE). The OSCTUNE register provides small adjustments to the HFINTOSC nominal frequency.

The OSCTUNE register contains the HFINTOSC Frequency Tuning (TUN) bits. The TUN bits default to a 6-bit, two's compliment value of `0x00`, which indicates that the oscillator is operating at the selected frequency. When a value between `0x01` and `0x1F` is written to the TUN bits, the HFINTOSC frequency is increased. When a value between `0x3F` and `0x20` is written to the TUN bits, the HFINTOSC frequency is decreased.

When the OSCTUNE register is modified, the oscillator will begin to shift to the new frequency. Code execution continues during this shift. There is no indication that the frequency shift occurred.

Important: OSCTUNE tuning does not affect the LFINTOSC frequency.

11.2.2.2 MFINTOSC

The Medium-Frequency Internal Oscillator (MFINTOSC) generates two constant clock outputs (500 kHz and 31.25 kHz). The MFINTOSC clock signals are created from the HFINTOSC using dynamic divider logic, which provides constant MFINTOSC clock rates regardless of selected HFINTOSC frequency.

The MFINTOSC cannot be used as the system clock, but can be used as a clock source for certain peripherals, such as a Timer.

11.2.2.3 SFINTOSC

The Specified Frequency Internal Oscillator (SFINTOSC) generates a 1 MHz output clock. The SFINTOSC clock signal is created from the HFINTOSC using dynamic divider logic, which provides a constant SFINTOSC clock rate regardless of the selected HFINTOSC frequency.

The SFINTOSC cannot be used as the system clock, but may be selected as a clock source for certain peripherals, such as a Timer.

11.2.2.4 LFINTOSC

The Low-Frequency Internal Oscillator (LFINTOSC) is a factory-calibrated 31 kHz internal clock source.

The LFINTOSC can be used as a system clock source, and may be used by certain peripheral modules as a clock source. Additionally, the LFINTOSC provides a time base for the following:

- Power-up Timer (PWRT)
- Watchdog Timer (WDT)

The LFINTOSC is enabled by programming the RSTOSC Configuration bits to select LFINTOSC.

11.2.2.5 ADCRC

The Analog-to-Digital RC (ADCRC) oscillator is dedicated to the ADC module. This oscillator is also referred to as the FRC clock. The ADCRC operates at a fixed frequency of approximately 600 kHz, and is used as a conversion clock source. The ADCRC allows the ADC module to operate in Sleep mode, which can reduce system noise during the ADC conversion. The ADCRC is automatically enabled when it is selected as the clock source for the ADC module, or when selected as the clock source of any peripheral that may use it. The ADCRC may also be manually enabled via the ADC Oscillator Enable (ADOEN) bit, thereby avoiding start-up delays when this source is used intermittently.

11.2.3 Oscillator Status and Manual Enable

The Oscillator Status (OSCSTAT) register displays the Ready status for each of the following oscillators:

- HFINTOSC
- MFINTOSC
- LFINTOSC
- ADCRC
- SFINTOSC

The HFINTOSC Oscillator Ready (HFOR), MFINTOSC Oscillator Ready (MFOR), LFINTOSC Oscillator Ready (LFOR), ADCRC Oscillator Ready (ADOR), and SFINTOSC Oscillator Ready (SFOR) Status bits indicate whether the respective oscillators are ready for use. These clock sources are available for use at any time, but may require a finite amount of time before they have reached the specified accuracy levels. When the oscillators are ready and have achieved the specified accuracy, module hardware sets the respective bits.

When a new value is loaded into the OSCFRQ register, the HFOR bit is cleared by hardware, and will be set again once the HFINTOSC is ready. During pending OSCFRQ changes, the HFINTOSC will stall at either a high or a low state until the oscillator locks in the new frequency and resumes operation.

The Oscillator Enable (OSCEN) register can be used to manually enable the following oscillators:

- HFINTOSC
- MFINTOSC
- LFINTOSC
- ADCRC

11.3 Register Definitions: Oscillator Control

11.3.1 OSCCON

Name: OSCCON
Offset: 0x88E

Oscillator Control Register

Bit	7	6	5	4	3	2	1	0
			COSC[1:0]					
Access			R	R				
Reset			q	q				

Bits 5:4 – COSC[1:0] Current Oscillator Source Select
Indicates the current oscillator source per the RSTOSC Configuration bits

11.3.2 OSCSTAT

Name: OSCSTAT
Offset: 0x890

Oscillator Status Register

Bit	7	6	5	4	3	2	1	0
		HFOR	MFOR	LFOR		ADOR	SFOR	
Access		R	R	R		R	R	
Reset		0	0	0		0	0	

Bit 6 – HFOR HFINTOSC Ready

Value	Description
1	The HFINTOSC is ready for use
0	The HFINTOSC is not enabled, or it is not ready for use

Bit 5 – MFOR MFINTOSC Ready

Value	Description
1	The MFINTOSC is ready for use
0	The MFINTOSC is not enabled, or it is not ready for use

Bit 4 – LFOR LFINTOSC Ready

Value	Description
1	The LFINTOSC is ready for use
0	The LFINTOSC is not enabled, or is not ready for use

Bit 2 – ADOR ADCRC Oscillator Ready

Value	Description
1	The ADCRC oscillator is ready for use
0	The ADCRC oscillator is not enabled, or is not ready for use

Bit 1 – SFOR Specified Frequency Oscillator Ready

Value	Description
1	The SFINTOSC is ready for use
0	The SFINTOSC is not ready for use

© 2020-2022 Microchip Technology Inc.
and its subsidiaries

11.3.3 OSCEN

Name: OSCEN
Offset: 0x891

Oscillator Enable Register

Bit	7	6	5	4	3	2	1	0
		HFOEN	MFOEN	LFOEN		ADOEN		
Access		R/W	R/W	R/W		R/W		
Reset		0	0	0		0		

Bit 6 – HFOEN HFINTOSC Enable

Value	Description
1	HFINTOSC is explicitly enabled, operating as specified by the OSCFRQ register
0	HFINTOSC can be enabled by a peripheral request

Bit 5 – MFOEN MFINTOSC Enable

Value	Description
1	MFINTOSC is explicitly enabled
0	MFINTOSC can be enabled by a peripheral request

Bit 4 – LFOEN LFINTOSC Enable

Value	Description
1	LFINTOSC is explicitly enabled
0	LFINTOSC can be enabled by a peripheral request

Bit 2 – ADOEN ADCRC Oscillator Enable

Value	Description
1	ADCRC is explicitly enabled
0	ADCRC may be enabled by a peripheral request

© 2020-2022 Microchip Technology Inc.
and its subsidiaries

11.3.4 OSCFRQ

Name: OSCFRQ
Offset: 0x893

HFINTOSC Frequency Selection Register

Bit	7	6	5	4	3	2	1	0
						FRQ[2:0]		
Access						R/W	R/W	R/W
Reset						0	0	0

Bits 2:0 – FRQ[2:0] HFINTOSC Frequency Selection

FRQ	Nominal Freq (MHz)
111-110	Reserved
101	32
100	16
011	8
010	4
001	2
000	1

11.3.5 OSCTUNE

Name: OSCTUNE
Offset: 0x892

HFINTOSC Frequency Tuning Register

Bit	7	6	5	4	3	2	1	0
			TUN[5:0]					
Access			R/W	R/W	R/W	R/W	R/W	R/W
Reset			0	0	0	0	0	0

Bits 5:0 – TUN[5:0] HFINTOSC Frequency Tuning

TUN	Condition
01 1111	Maximum frequency
•	•
•	•
•	•
00 0000	Center frequency. Oscillator is operating at the selected nominal frequency. (Default value)
•	•
•	•
•	•
10 0000	Minimum frequency

11.4 Register Summary - Oscillator Control

Offset	Name	Bit Pos.	7	6	5	4	3	2	1	0
0x00 ... 0x088D	Reserved									
0x088E	OSCCON	7:0			COSC[1:0]					
0x088F	Reserved									
0x0890	OSCSTAT	7:0		HFOR	MFOR	LFOR		ADOR	SFOR	
0x0891	OSCEN	7:0		HFOEN	MFOEN	LFOEN		ADOEN		
0x0892	OSCTUNE	7:0			TUN[5:0]					
0x0893	OSCFRQ	7:0						FRQ[2:0]		

12. Interrupts

The interrupt feature allows certain events to preempt normal program flow. Firmware is used to determine the source of the interrupt and act accordingly. Some interrupts can be configured to wake the MCU from Sleep mode.

Many peripherals can produce interrupts. Refer to the corresponding chapters for details.

A block diagram of the interrupt logic is shown in Figure 12-1.

Figure 12-1. Interrupt Logic

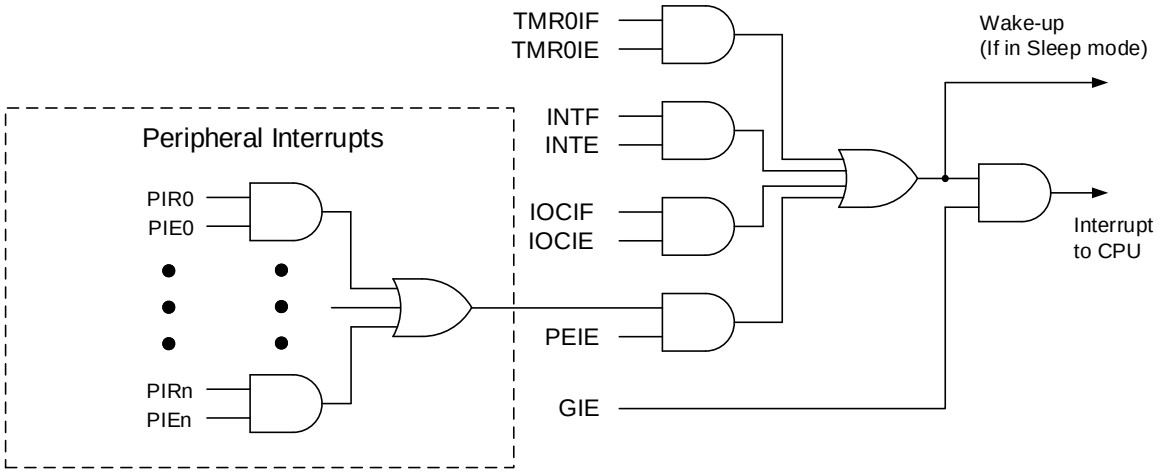

12.1 INTCON Register

The Interrupt Control (INTCON) register is readable and writable, and contains the Global Interrupt Enable (GIE), Peripheral Interrupt Enable (PEIE), and External Interrupt Edge Select (INTEDG) bits.

12.2 PIE Registers

The Peripheral Interrupt Enable (PIE) registers contain the individual enable bits for the peripheral interrupts. Due to the number of peripheral interrupt sources, there are three PIE registers in the PIC16F152 family.

12.3 PIR Registers

The Peripheral Interrupt Request (PIR) registers contain the individual flag bits for the peripheral interrupts. Due to the number of peripheral interrupt sources, there are three PIR registers.

12.4 Operation

Interrupts are disabled upon any device Reset. They are enabled by setting the following bits:

- GIE bit
- PEIE bit (if the Interrupt Enable bit of the interrupt event is contained in the PIE registers)
- Interrupt Enable bit(s) for the specific interrupt event(s)

The PIR registers record individual interrupts via interrupt flag bits. Interrupt flag bits will be set, regardless of the status of the GIE, PEIE and individual interrupt enable bits.

The following events happen when an interrupt event occurs while the GIE bit is set:

- Current prefetched instruction is flushed
- GIE bit is cleared
- Current Program Counter (PC) is pushed onto the stack
- Critical registers are automatically saved to the shadow registers (see Automatic Context Saving)
- PC is loaded with the interrupt vector 0004h

The firmware within the Interrupt Service Routine (ISR) may determine the source of the interrupt by polling the interrupt flag bits. The interrupt flag bits must be cleared before exiting the ISR to avoid repeated interrupts. Because the GIE bit is cleared, any interrupt that occurs while executing the ISR will be recorded through its interrupt flag, but will not cause the processor to redirect to the interrupt vector.

The `RETFIE` instruction exits the ISR by popping the previous address from the stack, restoring the saved context from the shadow registers and setting the GIE bit.

For additional information on a specific interrupts operation, refer to its peripheral section.

Important:

1. Individual interrupt flag bits are set, regardless of the state of any other enable bits.
2. All interrupts will be ignored while the GIE bit is cleared. Any interrupt occurring while the GIE bit is clear will be serviced when the GIE bit is set again.

12.5 Interrupt Latency

Interrupt latency is defined as the time from when the interrupt event occurs to the time code execution at the interrupt vector begins. The interrupt is sampled during Q1 of the instruction cycle. The actual interrupt latency then depends on the instruction that is executing at the time the interrupt is detected. See the following figures for more details.

Figure 12-2. Interrupt Latency

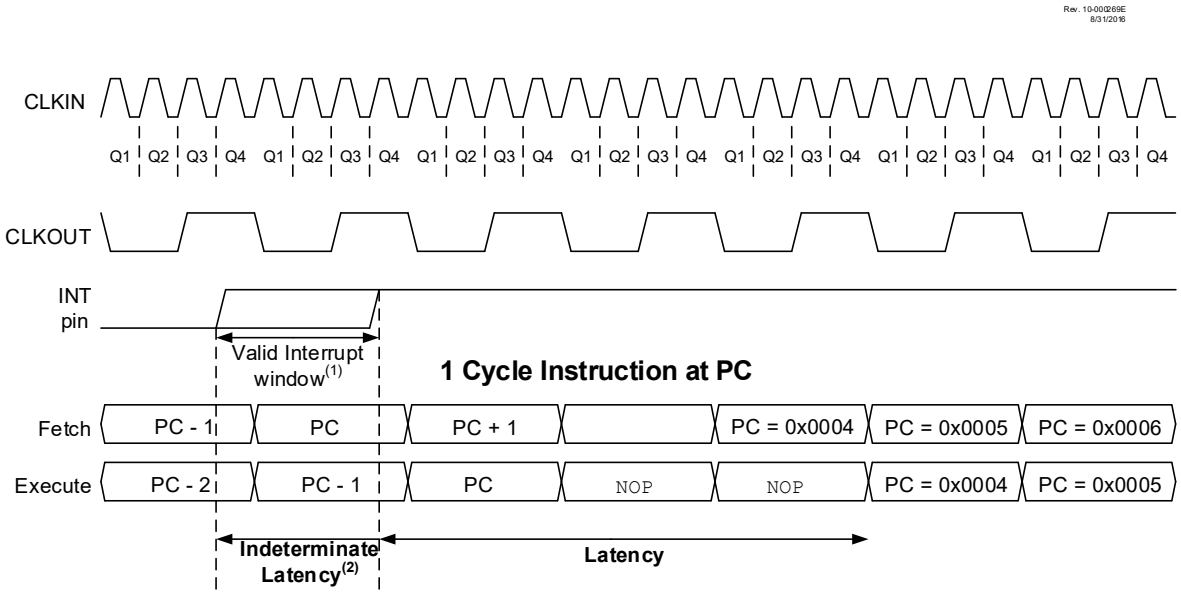

Figure 12-3. INT Pin Interrupt Timing

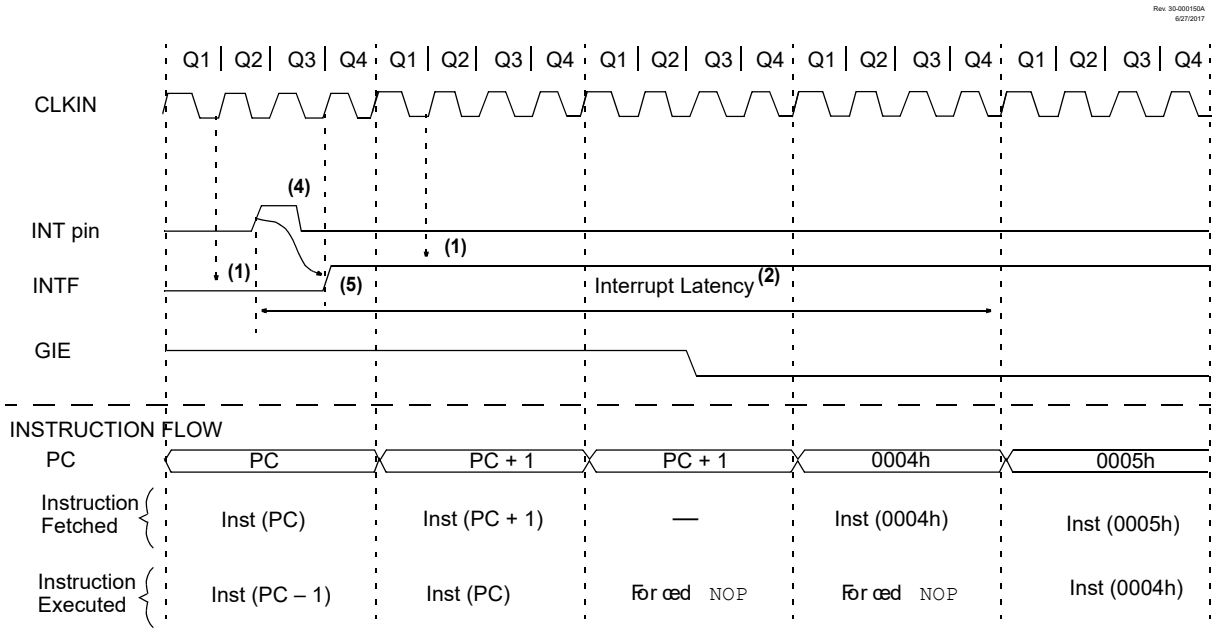

Notes:

1. INTF flag is sampled here (every Q1).
2. Asynchronous interrupt latency = 3-5 T_{CY}. Synchronous latency = 3-4 T_{CY}, where T_{CY} = instruction cycle time. Latency is the same whether Inst (PC) is a single-cycle or a two-cycle instruction.
3. For minimum width of INT pulse, refer to AC specifications in the "**Electrical Specifications**" section.
4. INTF may be set any time during the Q4-Q1 cycles.

12.6 Interrupts During Sleep

Interrupts can be used to wake up from Sleep. To wake up from Sleep, the peripheral must be able to operate without the system clock. The interrupt source must have the appropriate Interrupt Enable bit(s) set prior to entering Sleep.

On waking from Sleep, if the GIE bit is also set, the processor will branch to the interrupt vector. Otherwise, the processor will continue executing instructions after the `SLEEP` instruction. The instruction directly after the `SLEEP` instruction will always be executed before branching to the ISR.

12.7 INT Pin

The INT pin can be used to generate an asynchronous edge-triggered interrupt. This interrupt is enabled by setting the External Interrupt Enable (INTE) bit. The External Interrupt Edge Select (INTEDG) bit determines on which edge the interrupt will occur. When the INTEDG bit is set, the rising edge will cause the interrupt. When the INTEDG bit is clear, the falling edge will cause the interrupt. The External Interrupt Flag (INTF) bit will be set when a valid edge appears on the INT pin. If the GIE and INTE bits are also set, the processor will redirect program execution to the interrupt vector.

12.8 Automatic Context Saving

Upon entering an interrupt, the return PC address is saved on the stack. Additionally, the following registers are automatically saved in the shadow registers:

- WREG register
- STATUS register (except for $\overline{TO}$ and $\overline{PD}$)
- BSR register

- FSR registers
- PCLATH register

Upon exiting the Interrupt Service Routine, these registers are automatically restored. Any modifications to these registers during the ISR will be lost. If modifications to any of these registers are desired, the corresponding shadow register may be modified and the value will be restored when exiting the ISR. The shadow registers are available in Bank 63 and are readable and writable. Depending on the user's application, other registers may also need to be saved.

12.9 Register Definitions: Interrupt Control

12.9.1 INTCON

Name: INTCON
Offset: 0x000B

Interrupt Control Register

Bit	7	6	5	4	3	2	1	0
	GIE	PEIE						INTEDG
Access	R/W	R/W						R/W
Reset	0	0						1

Bit 7 – GIE Global Interrupt Enable

Value	Description
1	Enables all active interrupts
0	Disables all interrupts

Bit 6 – PEIE Peripheral Interrupt Enable

Value	Description
1	Enables all active peripheral interrupts
0	Disables all peripheral interrupts

Bit 0 – INTEDG External Interrupt Edge Select

Value	Description
1	Interrupt on rising edge of INT pin
0	Interrupt on falling edge of INT pin

Note: Interrupt flag bits are set when an interrupt condition occurs, regardless of the state of its corresponding enable bit or the Global Interrupt Enable (GIE) bit. User software needs to ensure the appropriate interrupt flag bits are clear prior to enabling an interrupt. This feature allows for software polling.

12.9.2 PIE0

Name: PIE0
Offset: 0x716

Peripheral Interrupt Enable Register 0

Bit	7	6	5	4	3	2	1	0
			TMR0IE	IOCIE				INTE
Access			R/W	R/W				R/W
Reset			0	0				0

Bit 5 – TMR0IE Timer0 Interrupt Enable

Value	Description
1	TMR0 interrupts are enabled
0	TMR0 interrupts are disabled

Bit 4 – IOCIE Interrupt-on-Change Enable

Value	Description
1	IOC interrupts are enabled
0	IOC interrupts are disabled

Bit 0 – INTE External Interrupt Enable(1)

Value	Description
1	External interrupts are enabled
0	External interrupts are disabled

Notes:

1. The external interrupt INT pin is selected by INTPPS.
2. Bit PEIE in the INTCON register must be set to enable any peripheral interrupt controlled by the PIE1 and PIE2 registers. Interrupt sources controlled by the PIE0 register do not require the PEIE bit to be set in order to allow interrupt vectoring (when the GIE bit in the INTCON register is set).

12.9.3 PIE1

Name: PIE1
Offset: 0x717

Peripheral Interrupt Enable Register 1

Bit	7	6	5	4	3	2	1	0
	CCP1IE	TMR2IE	TMR1IE	RC1IE	TX1IE	BCL1IE	SSP1IE	ADIE
Access	R/W	R/W	R/W	R/W	R/W	R/W	R/W	R/W
Reset	0	0	0	0	0	0	0	0

Bit 7 – CCP1IE CCP1 Interrupt Enable

Value	Description
1	CCP1 interrupts are enabled
0	CCP1 interrupts are disabled

Bit 6 – TMR2IE TMR2 Interrupt Enable

Value	Description
1	TMR2 interrupts are enabled
0	TMR2 interrupts are disabled

Bit 5 – TMR1IE TMR1 Interrupt Enable

Value	Description
1	TMR1 interrupts are enabled
0	TMR1 interrupts are disabled

Bit 4 – RC1IE EUSART1 Receive Interrupt Enable

Value	Description
1	EUSART1 receive interrupts are enabled
0	EUSART1 receive interrupts are disabled

Bit 3 – TX1IE EUSART1 Transmit Interrupt Enable

Value	Description
1	EUSART1 transmit interrupts are enabled
0	EUSART1 transmit interrupts are disabled

Bit 2 – BCL1IE MSSP1 Bus Collision Interrupt Enable

Value	Description
1	MSSP1 bus collision interrupts are enabled
0	MSSP1 bus collision interrupts are disabled

Bit 1 – SSP1IE MSSP1 Interrupt Enable

Value	Description
1	MSSP1 interrupts are enabled
0	MSSP1 interrupts are disabled

Bit 0 – ADIE ADC Interrupt Enable

Value	Description
1	ADC interrupts are enabled
0	ADC interrupts are disabled

Note: Bit PEIE of the INTCON register must be set to enable any peripheral interrupt controlled by registers PIE1 and PIE2.

12.9.4 PIE2

Name: PIE2
Offset: 0x718

Peripheral Interrupt Enable Register 2

Bit	7	6	5	4	3	2	1	0
	CCP2IE	NVMIE	TMR1GIE					
Access	R/W	R/W	R/W					
Reset	0	0	0					

Bit 7 – CCP2IE CCP2 Interrupt Enable

Value	Description
1	CCP2 interrupts are enabled
0	CCP2 interrupts are disabled

Bit 6 – NVMIE NVM Interrupt Enable

Value	Description
1	NVM interrupts are enabled
0	NVM interrupts are disabled

Bit 5 – TMR1GIE TMR1 Gate Interrupt Enable

Value	Description
1	TMR1 Gate interrupts are enabled
0	TMR1 Gate interrupts are disabled

Note: Bit PEIE of the INTCON register must be set to enable any peripheral interrupt controlled by PIE1 and PIE2 registers.

12.9.5 PIR0

Name: PIR0
Offset: 0x70C

Peripheral Interrupt Request Register 0

Bit	7	6	5	4	3	2	1	0
			TMR0IF	IOCIF				INTF
Access			R/W/HS	R				R/W/HS
Reset			0	0				0

Bit 5 – TMR0IF Timer0 Interrupt Flag

Value	Description
1	TMR0 register has overflowed (must be cleared by software)
0	TMR0 register has not overflowed

Bit 4 – IOCIF Interrupt-on-Change Flag(2)

Value	Description
1	One or more of the IOCAF-IOCCF register bits are currently set, indicating an enabled edge was detected by the IOC module.
0	None of the IOCAF-IOCCF register bits are currently set

Bit 0 – INTF External Interrupt Flag(1)

Value	Description
1	External interrupt has occurred
0	External interrupt has not occurred

Notes:

1. The external interrupt INT pin is selected by INTPPS.
2. The IOCIF bit is the logical OR of all the IOCAF-IOCCF flags. Therefore, to clear the IOCIF flag, application firmware must clear all of the lower level IOCAF-IOCCF register bits.
3. Interrupt flag bits are set when an interrupt condition occurs, regardless of the state of its corresponding enable bit or the Global Interrupt Enable (GIE) bit. User software needs to ensure the appropriate interrupt flag bits are cleared before enabling an interrupt.

12.9.6 PIR1

Name: PIR1
Offset: 0x70D

Peripheral Interrupt Request Register 1

Bit	7	6	5	4	3	2	1	0
	CCP1IF	TMR2IF	TMR1IF	RC1IF	TX1IF	BCL1IF	SSP1IF	ADIF
Access	R/W/HS	R/W/HS	R/W/HS	R	R	R/W/HS	R/W/HS	R/W/HS
Reset	0	0	0	0	0	0	0	0

Bit 7 – CCP1IF CCP1 Interrupt Flag

Value	CCP Mode		
	Capture	Compare	PWM
1	Capture occurred (must be cleared in software)	Compare match occurred (must be cleared in software)	Output trailing edge occurred (must be cleared in software)
0	Capture did not occur	Compare match did not occur	Output trailing edge did not occur

Bit 6 – TMR2IF TMR2 Interrupt Flag

Value	Description
1	Interrupt has occurred (must be cleared in software)
0	Interrupt event has not occurred

Bit 5 – TMR1IF TMR1 Interrupt Flag

Value	Description
1	Interrupt has occurred (must be cleared in software)
0	Interrupt event has not occurred

Bit 4 – RC1IF EUSART1 Receive Interrupt Flag(1)

Value	Description
1	The EUSART1 receive buffer (RC1REG) is not empty (contains at least one byte)
0	The EUSART1 receive buffer is empty

Bit 3 – TX1IF EUSART1 Transmit Interrupt Flag(2)

Value	Description
1	The EUSART1 transmit buffer (TX1REG) is empty
0	The EUSART1 transmit buffer is not empty

Bit 2 – BCL1IF MSSP1 Bus Collision Interrupt Flag

Value	Description
1	A bus collision was detected (must be cleared in software)
0	No bus collision was detected

Bit 1 – SSP1IF MSSP1 Interrupt Flag

Value	Description
1	Interrupt has occurred (must be cleared in software)
0	Interrupt event has not occurred

Bit 0 – ADIF ADC Interrupt Flag

Value	Description
1	Interrupt has occurred (must be cleared in software)
0	Interrupt event has not occurred

© 2020-2022 Microchip Technology Inc.
and its subsidiaries

Notes:

1. RC1IF is read-only. User software must read RC1REG to clear RC1IF.
2. TX1IF is read-only. User software must load TX1REG to clear TX1IF. TX1IF does not indicate a completed transmission (use TMRT for this purpose instead).
3. Interrupt flag bits are set when an interrupt condition occurs, regardless of the state of its corresponding enable bit or the Global Interrupt Enable (GIE) bit. User software needs to ensure the appropriate interrupt flag bits are cleared before enabling an interrupt.

12.9.7 PIR2

Name: PIR2
Offset: 0x70E

Peripheral Interrupt Request Register 2

Bit	7	6	5	4	3	2	1	0
	CCP2IF	NVMIF	TMR1GIF					
Access	R/W/HS	R/W/HS	R/W/HS					
Reset	0	0	0					

Bit 7 – CCP2IF CCP2 Interrupt Flag

Value	CCP Mode		
	Capture	Compare	PWM
1	Capture occurred (must be cleared in software)	Compare match occurred (must be cleared in software)	Output trailing edge occurred (must be cleared in software)
0	Capture did not occur	Compare match did not occur	Output trailing edge did not occur

Bit 6 – NVMIF Nonvolatile Memory (NVM) Interrupt Flag

Value	Description
1	The requested NVM operation has completed (must be cleared in software)
0	Interrupt event has not occurred

Bit 5 – TMR1GIF TMR1 Gate Interrupt Flag

Value	Description
1	The TMR1 Gate has gone inactive (must be cleared in software)
0	TMR1 Gate is active

Note: Interrupt flag bits are set when an interrupt condition occurs, regardless of the state of its corresponding enable bit or the Global Interrupt Enable (GIE) bit. User software needs to ensure the appropriate interrupt flag bits are cleared before enabling an interrupt.

12.10 Register Summary - Interrupt Control

Offset	Name	Bit Pos.	7	6	5	4	3	2	1	0
0x00 ... 0x070B	Reserved									
0x070C	PIR0	7:0			TMR0IF	IOCIF				INTF
0x070D	PIR1	7:0	CCP1IF	TMR2IF	TMR1IF	RC1IF	TX1IF	BCL1IF	SSP1IF	ADIF
0x070E	PIR2	7:0	CCP2IF	NVMIF	TMR1GIF					
0x070F ... 0x0715	Reserved									
0x0716	PIE0	7:0			TMR0IE	IOCIE				INTE
0x0717	PIE1	7:0	CCP1IE	TMR2IE	TMR1IE	RC1IE	TX1IE	BCL1IE	SSP1IE	ADIE
0x0718	PIE2	7:0	CCP2IE	NVMIE	TMR1GIE					

13. Sleep Mode

13.1 Sleep Mode Operation

Sleep mode is entered by executing the `SLEEP` instruction.

Upon entering Sleep mode, the following conditions exist:

1. Resets other than WDT are not affected by Sleep mode; WDT will be cleared but keeps running if enabled for operation during Sleep.
2. The $\overline{PD}$ bit is cleared.
3. The $\overline{TO}$ bit is set.
4. The CPU and the System clocks are disabled.
5. LFINTOSC and/or HFINTOSC will remain enabled if any peripheral has requested them as a clock source or if the HFOEN, MFOEN or LFOEN bits are set.
6. ADC is unaffected if the ADCRC oscillator is selected. When the ADC clock is something other than ADCRC, a `SLEEP` instruction causes the present conversion to be aborted and the ADC module is turned off, although the ADON bit remains active.
7. I/O ports maintain the status they had before `SLEEP` was executed (driving high, low, or high-impedance) only if no peripheral connected to the I/O port is active.

Refer to individual sections for more details on peripheral operation during Sleep.

To minimize current consumption, the following conditions need to be considered:

- I/O pins will not be floating
- External circuitry sinking current from I/O pins
- Internal circuitry sourcing current from I/O pins
- Current draw from pins with internal weak pull-ups
- Modules using any oscillator

I/O pins that are high-impedance inputs need to be pulled to V_{DD} or V_{SS} externally to avoid switching currents caused by floating inputs.

13.1.1 Wake-Up from Sleep

The device can wake up from Sleep through one of the following events:

1. External Reset input on $\overline{MCLR}$ pin, if enabled.
2. BOR Reset, if enabled.
3. POR Reset.
4. Watchdog Timer, if enabled.
5. Any external interrupt.
6. Interrupts by peripherals capable of running during Sleep (see the individual peripheral for more information).

The first three events will cause a device Reset. The last three events are considered a continuation of program execution. To determine whether a device Reset or wake-up event occurred, refer to the **“Determining the Cause of a Reset”** section in the **“Resets”** chapter.

When the `SLEEP` instruction is being executed, the next instruction (PC + 1) is prefetched. For the device to wake up through an interrupt event, the corresponding interrupt enable bit must be enabled. Wake-up will occur regardless of the state of the GIE bit. If the GIE bit is disabled, the device continues execution at the instruction after the `SLEEP` instruction. If the GIE bit is enabled, the device executes the instruction after the `SLEEP` instruction and will then call the Interrupt Service Routine. In cases where the execution of the instruction following `SLEEP` is not desirable, the user needs to have a `NOP` after the `SLEEP` instruction.

The WDT is cleared when the device wakes up from Sleep, regardless of the source of wake-up.

© 2020-2022 Microchip Technology Inc.
and its subsidiaries

13.1.2 Wake-Up Using Interrupts

When global interrupts are disabled (GIE cleared) and any interrupt source has both its interrupt enable bit and interrupt flag bit set, one of the following will occur:

- If the interrupt occurs before the execution of a `SLEEP` instruction:
  - The `SLEEP` instruction will execute as a `NOP`
  - The WDT and WDT prescaler will not be cleared
  - The $\overline{TO}$ bit will not be set
  - The $\overline{PD}$ bit will not be cleared
- If the interrupt occurs during or after the execution of a `SLEEP` instruction:
  - The `SLEEP` instruction will be completely executed
  - The device will immediately wake up from Sleep
  - The WDT and WDT prescaler will be cleared
  - The $\overline{TO}$ bit will be set
  - The $\overline{PD}$ bit will be cleared

Even if the flag bits were checked before executing a `SLEEP` instruction, it may be possible for flag bits to become set before the `SLEEP` instruction completes. To determine whether a `SLEEP` instruction executed, test the $\overline{PD}$ bit. If the $\overline{PD}$ bit is set, the `SLEEP` instruction was executed as a `NOP`.

14. WDT - Watchdog Timer

The Watchdog Timer (WDT) is a system timer that generates a Reset event if the firmware does not issue a `CLRWDT` instruction within the time-out period. The Watchdog Timer is typically used to reset the processor in the event of a software malfunction, but can also be used to wake the device when in Sleep mode.

The WDT has the following features:

- Selectable clock sources
- Multiple operating modes:
  - WDT is always on
  - WDT is off when in Sleep
  - WDT is controlled by software
  - WDT is always off
- Configurable time-out period from 1 ms to 256 seconds (nominal)
- Multiple Reset conditions
- Operation during Sleep

Figure 14-1. WDT Block Diagram

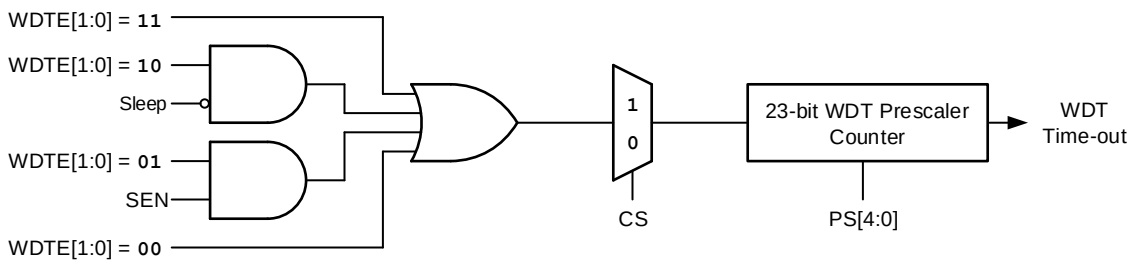

14.1 Selectable Clock Sources

The WDT can derive its time base from either the 31.25 kHz MFINTOSC or the 31 kHz LFINTOSC as selected by the WDT Clock Source Select (CS) bit.

Important: Time intervals detailed in this section are based on a minimum nominal interval of 1 ms generated from the LFINTOSC clock source.

14.2 WDT Operating Modes

The WDT module has four operating modes controlled by the Watchdog Timer Enable (WDTE) bits. See Table 14-1.

Table 14-1. WDT Operating Modes

WDTE[1:0]	SEN	Device Mode	WDT Mode
11	x	X	Active

.....continued

WDTE[1:0]	SEN	Device Mode	WDT Mode
10	x	Awake	Active
		Sleep	Disabled
01	1	X	Active
	0	X	Disabled
00	x	X	Disabled

14.2.1 WDT Is Always On

When the WDTE bits are set to '11', the WDT is always on. The WDT protection is active during Sleep mode.

14.2.2 WDT Is Off During Sleep

When the WDTE bits are set to '10', the WDT is on except during Sleep mode. During Sleep mode, the WDT protection is disabled.

14.2.3 WDT Controlled by Software

When the WDTE bits are set to '01', the WDT is controlled by the Software Watchdog Timer Enable (SEN) bit. When SEN is set (SEN = 1), WDT protection is active. When SEN is clear (SEN = 0), WDT protection is disabled.

14.2.4 WDT Is Off

When the WDTE bits are set to '00', the WDT is disabled. In this mode, the SEN bit is ignored.

14.3 WDT Time-Out Period

The Watchdog Timer Prescale Select (PS) bits set the time-out period from 1 ms to 256 seconds (nominal). After a Reset, the default time-out period is two seconds.

14.4 Clearing the WDT

The WDT is cleared when any of the following conditions occur:

- Any Reset
- Valid CLRWDT instruction is executed
- Device enters Sleep
- Devices wakes up from Sleep
- Any write to the WDTCON register

14.5 WDT Operation During Sleep

When the WDT enters Sleep, the WDT is cleared. If the WDT is enabled during Sleep, the WDT resumes counting. When the WDT exits Sleep, the WDT is cleared again.

When a WDT time-out occurs while the device is in Sleep, no Reset is generated. Instead, the device wakes up and resumes operation. The Time-Out ($\overline{TO}$) and Power-Down ($\overline{PD}$) bits are cleared to indicate the event. Additionally, the Watchdog Timer Reset Flag ($\overline{RWDT}$) bit is cleared, indicating a WDT Reset event occurred.

14.6 Register Definitions: WDT Control

14.6.1 WDTCON

Name: WDTCON
Offset: 0x80C

Watchdog Timer Control Register

Bit	7	6	5	4	3	2	1	0
	CS		PS[4:0]					SEN
Access	R/W		R/W	R/W	R/W	R/W	R/W	R/W
Reset	0		0	0	0	0	0	0

Bit 7 – CS Watchdog Timer Clock Source Selection

Value	Description
1	MFINTOSC (31.25 kHz)
0	LFINTOSC (31 kHz)

Bits 5:1 – PS[4:0] Watchdog Timer Prescale Selection[1]

Value	Description
11111 – 10011	Reserved. Results in minimum interval (1:32)
10010	1:8388608 (Interval 256s nominal)
10001	1:4194304 (Interval 128s nominal)
10000	1:2097152 (Interval 64s nominal)
01111	1:1048576 (Interval 32s nominal)
01110	1:524288 (Interval 16s nominal)
01101	1:262144 (Interval 8s nominal)
01100	1:131072 (Interval 4s nominal)
01011	1:65536 (Interval 2s nominal) (Reset value)
01010	1:32768 (Interval 1s nominal)
01001	1:16384 (Interval 512 ms nominal)
01000	1:8192 (Interval 256 ms nominal)
00111	1:4096 (Interval 128 ms nominal)
00110	1:2048 (Interval 64 ms nominal)
00101	1:1024 (Interval 32 ms nominal)
00100	1:512 (Interval 16 ms nominal)
00011	1:256 (Interval 8 ms nominal)
00010	1:128 (Interval 4 ms nominal)
00001	1:64 (Interval 2 ms nominal)
00000	1:32 (Interval 1 ms nominal)

Bit 0 – SEN Software WDT Enable/Disable

Value	Condition	Description
x	If WDTE[1:0] ≠ 01	This bit is ignored
1	If WDTE[1:0] = 01	WDT is enabled
0	If WDTE[1:0] = 01	WDT is disabled

Note:
1. Times are approximate and based on the 31 kHz LFINTOSC clock source.

14.7 Register Summary - WDT Control

Offset	Name	Bit Pos.	7	6	5	4	3	2	1	0
0x00 ... 0x080B	Reserved									
0x080C	WDTCON	7:0	CS		PS[4:0]					SEN

15. NVM - Nonvolatile Memory Control

The Nonvolatile Memory (NVM) module provides run-time read and write access to the Program Flash Memory (PFM) and Configuration bits. PFM includes the program memory and user ID space.

NVM is accessible using both FSR and INDF registers, or through the NVMREG register interface (see Table 15-1).

The write time is controlled by an on-chip timer. The write/erase voltages are generated by an on-chip charge pump rated to operate over the operating voltage range of the device.

PFM can be protected in two ways: code protection and write protection. Code protection (Configuration bit $\overline{CP}$) disables PFM read and write access through an external device programmer. Write protection prevents user software writes to NVM areas tagged for protection by the $\overline{WRTn}$ Configuration bits. Code protection does not affect the self-write and erase functionality, whereas write protection does. Attempts to write a protected location will set the WRERR bit. Code protection and write protection can only be reset on a Bulk Erase performed by an external programmer.

The Bulk Erase command is used to completely erase program memory. The Bulk Erase command can only be issued through an external programmer. There is no run time access for this command.

If the device is code-protected and a Bulk Erase command for the configuration memory is issued; all other memory regions are also erased. Refer to the **"Programming Specifications"** document for more details.

Table 15-1. NVM Organization and Access Information

Main Values			NVMREG Access			FSR Access	
Memory Function	Memory Type	Program Counter (PC), ICSP™ Address	NVMREGS bit (NVMCON1)	NVMADR[14:0]	Allowed Operations	FSR Address	FSR Programming Access
Reset Vector	Program Flash Memory	0x0000	0	0x0000	Read/Write	0x8000	Read-Only
User Memory		0x0001	0	0x0001		0x8001	
		0x0003		0x0003		0x8003	
INT Vector		0x0004	0	0x0004		0x8004	
User Memory		0x0005	0	0x0005		0x8005	
		0x3FFF(1)		0x3FFF(1)		0xFFFF	
User ID	Program Flash Memory	0x8000	1	0x0000	Read/Write	No Access	
		0x8003		0x0003			
Reserved	—	—	—	0x0004	—		
Revision ID	Hard Coded in Program Flash Memory	0x8005	1	0x0005	Read		
Device ID		0x8006	1	0x0006			
CONFIG1	Program Flash Memory	0x8007	1	0x0007	Read/Write		
CONFIG2		0x8008	1	0x0008			
CONFIG3		0x8009	1	0x0009			
CONFIG4		0x800A	1	0x000A			
CONFIG5		0x800B	1	0x000B			
DIA and DCI	Hard Coded in Program Flash Memory	0x8100	1	0x0100	Read		
		0x82FF	1	0x02FF			

Note:

1. The maximum Program Flash Memory address for the PIC16F152 family is 0x3FFF.

15.1 Program Flash Memory (PFM)

The Program Flash Memory (PFM) is readable, writable and erasable over the entire V_{DD} range.

PFM consists of the following regions:

- User program memory (read/write)
- Configuration Words (read/write)
- Device ID (read-only)
- Revision ID (read-only)
- User ID (read-write)
- Device Information Area (read-only)
- Device Configuration Information (read-only)

PFM can be read and/or written to through:

- CPU instruction fetch (read-only)
- FSR/INDF indirect access (read-only)
- NVMREG access (read-write)
- In-Circuit Serial Programming™ (ICSP™) (external read-write)

It is important to understand the program memory structure for erase and programming operations. Program memory is arranged in rows. A row consists of 32 14-bit program memory words. A row is the minimum size that can be erased by user software. A Bulk Erase command cannot be issued from user code.

Read operations return a single word of memory. Write and erase operations are done on a row basis. Program memory will erase to a logic '1' and program to a logic '0'.

All or a portion of a row can be programmed. Data to be written into the program memory row is written to 14-bit wide data write latches. These latches are not directly accessible, but may be loaded via sequential writes to the NVMDATH:NVMDATL register pair.

Important: To modify only a portion of a previously programmed row, the contents of the entire row must be read. Then, the new data and retained data can be written into the write latches to reprogram the row of program memory. However, any unprogrammed locations can be written without first erasing the row. In this case, it is not necessary to save and rewrite the other previously programmed locations.

Writing or erasing program memory will cease instruction fetches until the operation is complete. The program memory cannot be accessed during the write or erase, so code cannot execute. An internal programming timer controls the write time of program memory writes and erases.

A value written to program memory does not need to be a valid instruction. Executing a program memory location that forms an invalid instruction results in a `NOP`.

15.1.1 FSR and INDF Access

The File Select (FSR) and INDF registers allow indirect access to the Program Flash Memory. Indirect addressing is a mode in which the memory address in the instruction is determined by another register. The value of the FSR registers is used to determine the memory address location to be accessed.

15.1.1.1 FSR Read

The FSRs are used to provide read access to program memory.

Program memory is accessed by loading the FSRxH:FSRxL register pair with the address to be read, and setting bit 7 of the FSRxH register to '1'. When a `MOVIW` instruction, or any instruction that accesses INDFx, is executed, the value loaded into the FSRx register pair points to the location in program memory to be accessed. If the FSRx register pair points to an INDFx register, the read will return '0'.

Reading from NVM requires one instruction cycle. The CPU operation is suspended during the read and resumes immediately after. Read operations return a single byte of memory.

15.1.1.2 FSR Write

Writing/erasing the NVM through the FSR registers (e.g., the `MOVWI` instruction) is not supported in the PIC16F152 microcontroller family.

15.1.2 NVMREG Access

The NVMREG interface allows read/write access to all the locations accessible by FSRs, read/write access to the User ID locations, and read-only access to the device identification, revision, and configuration data.

Writing or erasing of NVM via the NVMREG interface is prevented when the device is write-protected.

15.1.2.1 NVMREG Read Operation

To read a NVM location using the NVMREG interface, the user must:

1. Clear the NVMREGS bit if the user intends to access program memory locations, or set NMVREGS if the user intends to access User ID or configuration locations.
2. Write the desired address into the NVMADRH:NVMADRL register pair.
3. Set the RD bit to initiate the read.

Once the read control bit is set, the CPU operation is suspended during the read and resumes immediately after. The data is available in the very next cycle, in the NVMDATH:NVMDATL register pair; therefore, it can be read as two bytes in the following instructions.

The NVMDATH:NVMDATL register pair will hold this value until another read or until it is written to by the user.

Upon completion, the RD bit is cleared by hardware.

Figure 15-1. Program Flash Memory Read Sequence

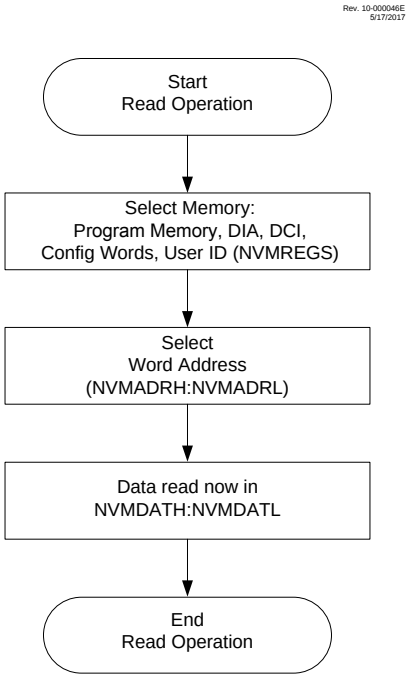

Example 15-1. Program Memory Read

```
// This code block will read 1 word of program memory

NVMCON1bits.NVMREGS = 0;          // Point to PFM
NVMADR = PFM_ADDRESS;             // Load NVMADRH:NVMADRL with PFM address
NVMCON1bits.RD = 1;               // Initiate read cycle
PFM_DATA_LOW = NVMDATL;           // PFM data low byte
PFM_DATA_HIGH = NVMDATH;          // PFM data high byte
```

15.1.2.2 NVM Unlock Sequence

The unlock sequence is a mechanism that protects the NVM from unintended self-write programming or erasing. The sequence must be executed and completed without interruption to successfully complete any of the following operations:

- PFM Row Erase
- Write of PFM write latches to PFM memory
- Write of PFM write latches to User IDs
- Write to Configuration Words

The unlock sequence consists of the following steps and must be completed in order:

- Write 55h to NVMCON2
- Write AAh to NMVCON2
- Set the WR bit

Once the WR bit is set, the processor will stall internal operations until the operation is complete and then resume with the next instruction.

Since the unlock sequence must not be interrupted, global interrupts must be disabled prior to the unlock sequence and re-enabled after the unlock sequence is completed.

Figure 15-2. NVM Unlock Sequence

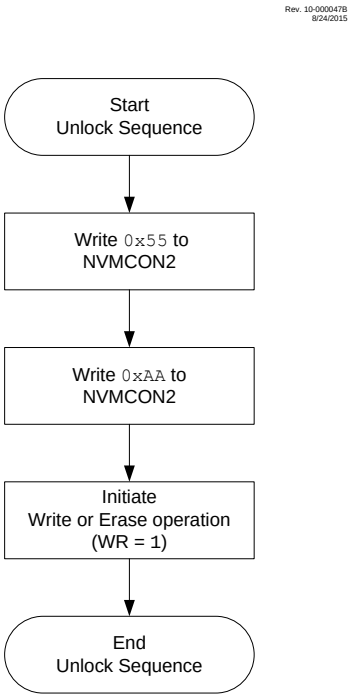

Example 15-2. NVM Unlock Sequence

```
NVMCON1bits.WREN = 1;          // Enable write/erase
INTCONbits.GIE = 0;            // Disable global interrupts

// The next three steps are the required unlock sequence
NVMCON2 = 0x55;                // First unlock code
NVMCON2 = 0xAA;                // Second unlock code
NVMCON1bits.WR = 1;            // Initiate write/erase cycle

INTCONbits.GIE = 1;            // Enable global interrupts
NVMCON1bits.WREN = 0;          // Disable further write/erase cycles
```

Note: Sequence begins when NVMCON2 is written; the three unlock steps must occur in the cycle-accurate order shown. If the timing of the sequence is corrupted by an interrupt or a debugger Halt, the action will not take place.

15.1.2.3 NVMREG Erase of Program Memory

Before writing to program memory, the word(s) to be written must be erased or previously unwritten. Program memory can only be erased one row at a time. No automatic erase occurs upon the initiation of the write to program memory. To erase a program memory row:

1. Clear the NVMREGS bit to erase program memory locations, or set the NMVREGS bit to erase User ID locations.
2. Write the desired address into the NVMADRH:NVMADRL register pair.
3. Set the FREE and WREN bits.
4. Perform the unlock sequence as described in the NVM Unlock Sequence section.

If the program memory address is write-protected, the WR bit will be cleared and the erase operation will not take place.

While erasing program memory, the CPU operation is suspended and resumes when the operation is complete. Upon completion, the NVMIF bit is set, and an interrupt will occur if the NVMIE bit is also set.

Write latch data is not affected by erase operations, and WREN will remain unchanged.

Figure 15-3. NVM Erase Sequence

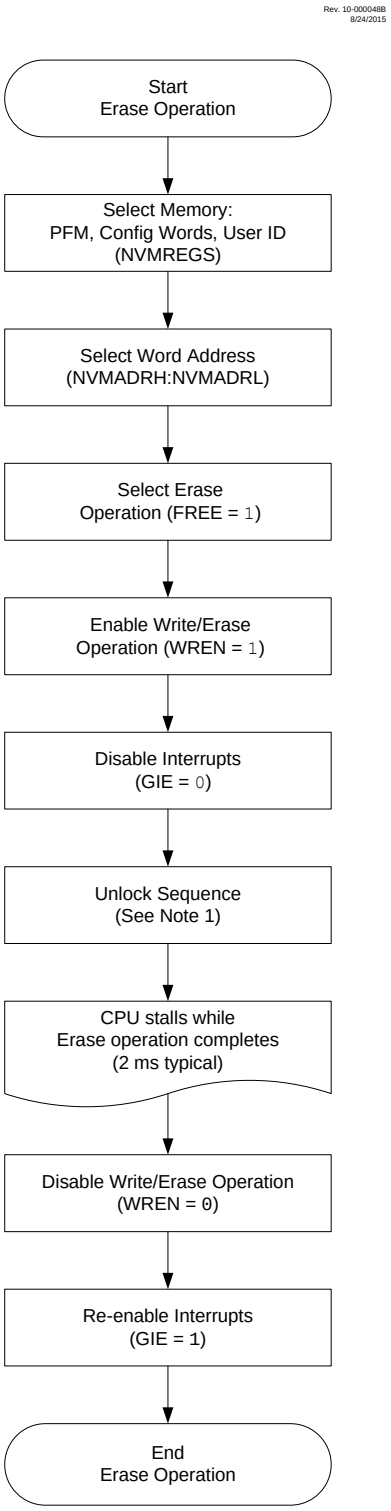

Note:

1. See the NVM Unlock Sequence section.

Example 15-3. Erasing One Row of Program Flash Memory

```
NVMCON1bits.NVMREGS = 0;          // Point to PFM
NVMADR = PFM_ADD;                 // 14-bit PFM address
NVMCON1bits.FREE = 1;             // Specify an erase operation
NVMCON1bits.WREN = 1;             // Enable write/erase cycle
INTCONbits.GIE = 0;               // Disable interrupts during unlock sequence

//The next three steps are the required unlock sequence
NVMCON2 = 0x55;                   // First unlock code
NVMCON2 = 0xAA;                   // Second unlock code
NVMCON1bits.WR = 1;               // Initiate write/erase cycle

INTCONbits.GIE = 1;               // Enable interrupts
NVMCON1bits.WREN = 1;             // Disable writes
```

15.1.2.4 NVMREG Write to Program Memory

Program memory is programmed using the following steps:

1. Load the address of the row to be programmed into NVMADRH:NVMADRL.
2. Load each write latch with data via the NMVDATH:NVMDATL registers.
3. Initiate a programming operation.
4. Repeat steps 1 through 3 until all data is written.

Before writing to program memory, the word(s) to be written must be erased or previously unwritten. Program memory can only be erased one row at a time. No automatic erase occurs upon the initiation of the write.

Program memory can be written one or more words at a time. The maximum number of words written at one time is equal to the number of write latches. See Figure 15-4 for more details.

The write latches are aligned to the Flash row address boundary defined by the upper ten bits of NVMADRH:NVMADRL, (NVMADRH[6:0]:NVMADRL[7:5]) with the lower five bits of NVMADRL, (NVMADRL[4:0]) determining the write latch being loaded. Write operations do not cross these boundaries. At the completion of a program memory write operation, the data in the write latches is reset to contain 0x3FFF.

The following steps must be completed to load the write latches and program a row of program memory. These steps are divided into two parts. First, each write latch is loaded with data from the NVMDATH:NVMDATL using the unlock sequence with LWLO = `1`. When the last word to be loaded into the write latch is ready, the LWLO bit is cleared and the unlock sequence executed. This initiates the programming operation, writing all the latches into Flash program memory.

Important: The special unlock sequence is required to load a write latch with data or initiate a Flash programming operation. If the unlock sequence is interrupted, writing to the latches or program memory will not be initiated.

1. Set the WREN bit.
2. Clear the NVMREGS bit.
3. Set the LWLO bit. When the LWLO bit is set (LWLO = `1`), the write sequence will only load the write latches and will not initiate the write to Program Flash Memory.
4. Load the NVMADRH:NVMADRL register pair with the address of the location to be written.
5. Load the NVMDATH:NVMDATL register pair with the program memory data to be written.
6. Execute the unlock sequence. The write latch is now loaded.
7. Increment the NVMADRH:NVMADRL register pair to point to the next location.
8. Repeat steps 5 through 7 until all except the last write latch has been loaded.
9. Clear the LWLO bit. When the LWLO bit is clear (LWLO = `0`), the write sequence will initiate the write to Program Flash Memory.
10. Load the NVMDATH:NVMDATL register pair with the program memory data to be written.

© 2020-2022 Microchip Technology Inc.
and its subsidiaries

11. Execute the unlock sequence. The entire program memory latch content is now written to Flash program memory.

Important: The program memory write latches are reset to the Blank state (0x3FFF) at the completion of every write or erase operation. As a result, it is not necessary to load all the program memory write latches. Unloaded latches will remain in the Blank state.

An example of the complete write sequence is shown in Example 15-4. The initial address is loaded into the NVMADRH:NVMADRL register pair; the data is loaded using indirect addressing.

Figure 15-4. NVMREG Writes to Program Flash Memory with 32 Write Latches

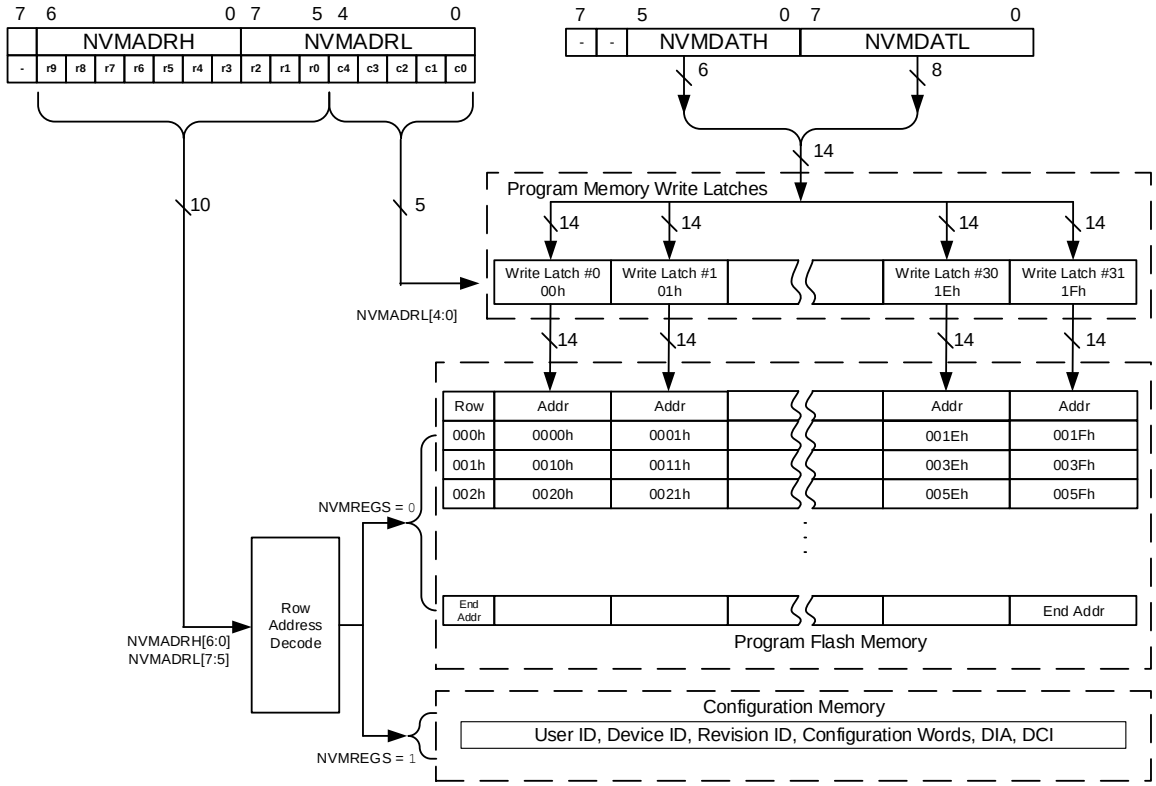

Figure 15-5. Program Flash Memory Write Sequence

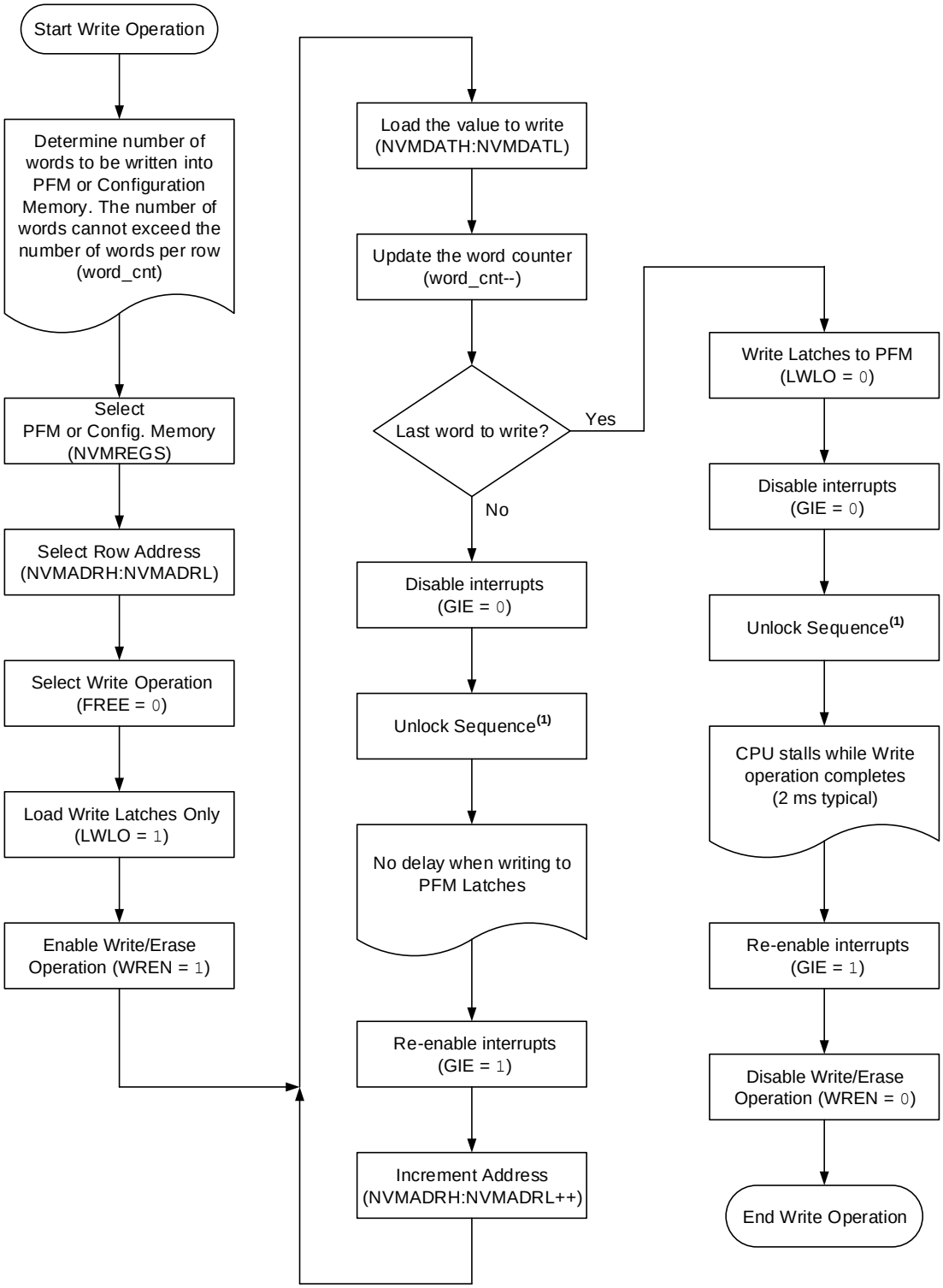

Note:

1. See the NVM Unlock Sequence section.

Example 15-4. Writing to Program Flash Memory

```
INTCONbits.GIE = 0;                 // Disable interrupts

// PFM row must be erased before writes can occur
NVMCON1bits.NVMREGS = 0;            // Point to PFM
NVMADR = PFMStartAddress;           // Must start at beginning of PFM row
NVMCON1bits.FREE = 1;               // Specify an erase operation
NVMCON1bits.WREN = 1;               // Allow erase cycle

// Required unlock sequence
NVMCON2 = 0x55;
NVMCON2 = 0xAA;
NVMCON1bits.WR = 1;

NVMCON1bits.LWLO = 1;               // Load write latches

// Write to the data latches
for (i = 0; i < PFM_ROW_SIZE; i++)
{
    NVMADR = PFMStartAddress;       // Load starting address
    NVMDAT = PFM_WRITE_DATA;        // Load data

    // Required unlock sequence
    NVMCON2 = 0x55;
    NVMCON2 = 0xAA;
    NVMCON1bits.WR = 1;

    PFMStartAddress++;              // Increment address
    if(i = (PFM_ROW_SIZE - 1))      // All latches loaded?
    {
        NVMCON1bits.LWLO = 0;       // Start PFM write
    }
}

NVMCON1bits.WREN = 0;               // Disable writes
INTCONbits.GIE = 1;                 // Enable interrupts
```

15.1.2.5 Modifying Flash Program Memory

When modifying existing data in a program memory, data within the memory row must be read and saved in a RAM image. Program memory is modified using the following steps:

1. Load the starting address of the row to be modified.
2. Read the existing data from the row into a RAM image.
3. Modify the RAM image to contain the new data to be written into program memory.
4. Load the starting address of the row to be rewritten.
5. Erase the program memory row.
6. Load the write latches with data from the RAM image.
7. Initiate a programming operation.

Figure 15-6. Program Flash Memory Modify Sequence

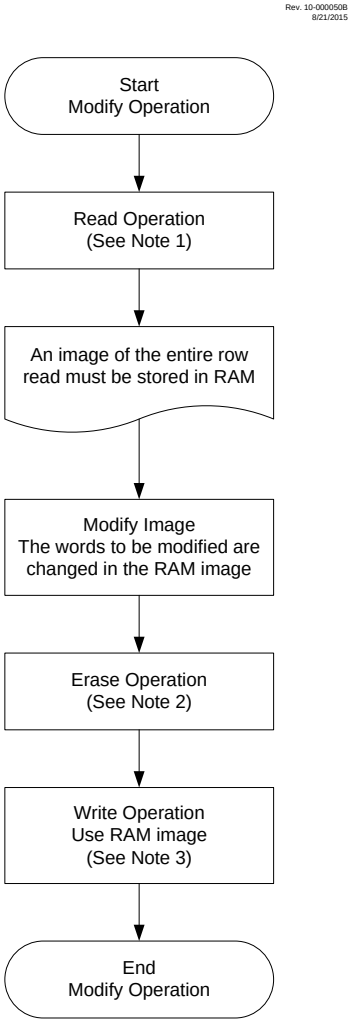

Notes:

1. See Figure 15-1.
2. See Figure 15-3.
3. See Figure 15-5.

15.1.2.6 NVMREG Access to DIA, DCI, User ID, Device ID, Revision ID, and Configuration Words

NVMREGS can be used to access the following memory regions:

- Device Information Area (DIA)
- Device Configuration Information (DCI)
- User ID region
- Device ID and Revision ID
- Configuration Words

The value of NVMREGS is set to '1' to access these regions. The memory regions listed above will be pointed to by PC[15] = 1, but not all addresses reference valid data. Different access may exist for reads and writes. Refer to the table below. When read access is initiated on an address outside the parameters listed in the following table, the NVMDATH: NVMDATL register pair is cleared, reading back '0's.

Table 15-2. NVMREG Access to DIA, DCI, User ID, Device ID, Revision ID and Configuration Words (NVMREGS = 1)

Address	Function	Read Access	Write Access
0x8000 - 0x8003	User IDs	Yes	Yes
0x8005 - 0x8006	Device ID/Revision ID	Yes	No
0x8007 - 0x800B	Configuration Words 1-5	Yes	Yes
0x8100 - 0x82FF	DIA and DCI	Yes	No

15.1.2.7 Write Verify

It is considered good programming practice to verify that program memory writes agree with the intended value. Since program memory is stored as a full row then the stored program memory contents are compared with the intended data stored in RAM after the last write is complete.

Figure 15-7. Program Flash Memory Write Verify Sequence

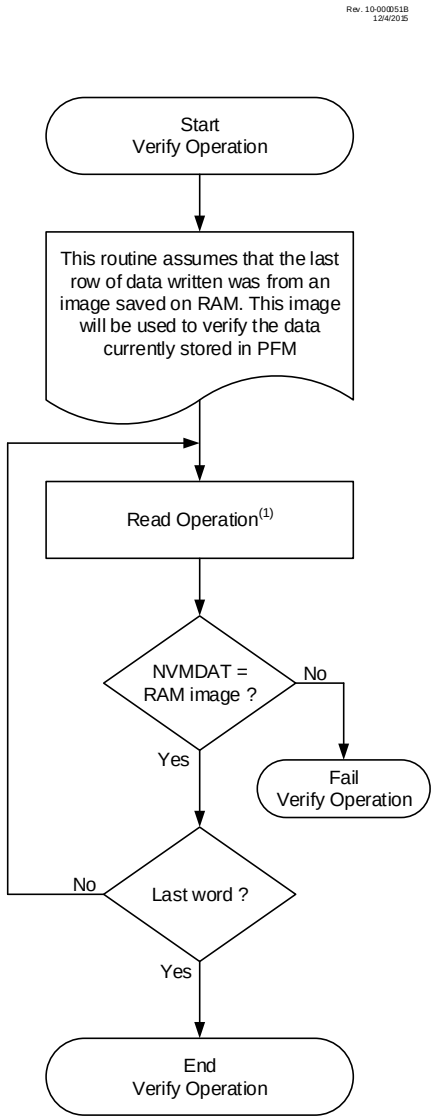

Note:

1. See Figure 15-1.

15.1.2.8 WRERR Bit

The WRERR bit can be used to determine if a write error occurred. WRERR will be set if one of the following conditions occurs:

- If WR is set while the NVMADRH:NMVADRL points to a write-protected address
- A Reset occurs while a self-write operation was in progress
- An unlock sequence was interrupted

The WRERR bit is normally set by hardware, but can be set by the user for test purposes. Once set, WRERR must be cleared in software.

Table 15-3. Actions for PFM When WR = 1

Free	LWLO	Actions for PFM when WR = 1	Comments
1	x	Erase the 32-word row of NVMADRH:NVMADRL location.	• If WP is enabled, WR is cleared and WRERR is set • All 32 words are erased • NVMDATH:NVMDATL is ignored
0	1	Copy NVMDATH:NVMDATL to the write latch corresponding to NVMADR LSBs.	• Write protection is ignored • No memory access occurs
0	0	Write the write-latch data to PFM row.	• If WP is enabled, WR is cleared and WRERR is set • Write latches are reset to 0x3FFF • NVMDATH:NVMDATL is ignored

15.2 Register Definitions: Nonvolatile Memory Control

15.2.1 NVMADR

Name: NVMADR
Offset: 0x1C8C

Nonvolatile Memory Address Register

Bit	15	14	13	12	11	10	9	8
		NVMADR[14:8]						
Access		R/W	R/W	R/W	R/W	R/W	R/W	R/W
Reset		0	0	0	0	0	0	0

Bit	7	6	5	4	3	2	1	0
	NVMADR[7:0]							
Access	R/W	R/W	R/W	R/W	R/W	R/W	R/W	R/W
Reset	0	0	0	0	0	0	0	0

Bits 14:0 – NVMADR[14:0] NVM Address Bits

Notes:

1. The individual bytes in this multibyte register can be accessed with the following register names:
   – NVMADRH: Accesses the high byte NVMADR[15:8]
   – NVMADRL: Accesses the low byte NVMADR[7:0].
2. Bit [15] is undefined while WR = `1`.

15.2.2 NVMDAT

Name: NVMDAT
Offset: 0x1C8E

Nonvolatile Memory Data Register

Bit	15	14	13	12	11	10	9	8
			NVMDAT[13:8]					
Access			R/W	R/W	R/W	R/W	R/W	R/W
Reset			x	x	x	x	x	x

Bit	7	6	5	4	3	2	1	0
	NVMDAT[7:0]							
Access	R/W	R/W	R/W	R/W	R/W	R/W	R/W	R/W
Reset	x	x	x	x	x	x	x	x

Bits 13:0 – NVMDAT[13:0] NVM Data bits
Reset States: POR/BOR = xxxxxxxxxxxxxx
All Other Resets = uuuuuuuuuuuuuu

Notes: The individual bytes in this multibyte register can be accessed with the following register names:

- NVMDATH: Accesses the high byte NVMDAT[13:8]
- NVMDATL: Accesses the low byte NVMDAT[7:0]

15.2.3 NVMCON1

Name: NVMCON1
Offset: 0x1C90

Nonvolatile Memory Control 1 Register

Bit	7	6	5	4	3	2	1	0
		NVMREGS	LWLO	FREE	WRERR	WREN	WR	RD
Access		R/W	R/W	R/S/HC	R/W/HS	R/W	R/S/HC	R/S/HC
Reset		0	0	0	0	0	0	0

Bit 6 – NVMREGS NVM Region Selection

Value	Description
1	Access DIA, DCI, Configuration, User ID, Revision ID, and Device ID Registers
0	Access Program Flash Memory

Bit 5 – LWLO Load Write Latches Only

Value	Condition	Description
1	When FREE = 0	The next WR command updates the write latch for this word within the row; no memory operation is initiated
0	When FREE = 0	The next WR command writes data or erases
–	Otherwise:	This bit is ignored

Bit 4 – FREE Program Flash Memory Erase Enable

Value	Description
1	Performs an erase operation with the next WR command; the 32-word pseudo-row containing the indicated address is erased (to all 1s) to prepare for writing
0	The next WR command writes without erasing

Bit 3 – WRERR
Write-Reset Error Flag(1,2,3)

Value	Description
1	A write operation error has occurred
0	All write operations have completed normally

Bit 2 – WREN Program/Erase Enable

Value	Description
1	Allows program/erase cycles
0	Inhibits programming/erasing of program Flash

Bit 1 – WR Write Control(4,5,6)

Value	Description
1	Initiates the program/erase operation at the corresponding NVM location
0	NVM program/erase operation is complete and inactive

Bit 0 – RD Read Control

Value	Description
1	Initiates a read at address = NVMADR
0	NVM read operation is complete and inactive

Notes:

1. Bit is undefined while WR = 1.
2. Bit must be cleared by software; hardware will not clear this bit.
3. Bit may be written to '1' by the user to implement test sequences.
4. This bit can only be set by following the sequence described in the **"NVM Unlock Sequence"** section.
5. Operations are self-timed and the WR bit is cleared by hardware when complete.
6. Once a write operation is initiated, setting this bit to zero will have no effect.

15.2.4 NVMCON2

Name: NVMCON2
Offset: 0x1C91

Nonvolatile Memory Control 2 Register

Bit	7	6	5	4	3	2	1	0
	NVMCON2[7:0]							
Access	WO	WO	WO	WO	WO	WO	WO	WO
Reset	0	0	0	0	0	0	0	0

Bits 7:0 – NVMCON2[7:0] Flash Memory Unlock Pattern bits

Note: To unlock writes, a `0x55` must be written first followed by an `0xAA` before setting the WR bit of the NVMCON1 register. The value written to this register is used to unlock the writes.

15.3 Register Summary - NVM Control

Offset	Name	Bit Pos.	7	6	5	4	3	2	1	0
0x00 ... 0x1C8B	Reserved									
0x1C8C	NVMADR	7:0	NVMADR[7:0]							
		15:8		NVMADR[14:8]						
0x1C8E	NVMDAT	7:0	NVMDAT[7:0]							
		15:8			NVMDAT[13:8]					
0x1C90	NVMCON1	7:0		NVMREGS	LWLO	FREE	WRERR	WREN	WR	RD
0x1C91	NVMCON2	7:0	NVMCON2[7:0]							

16. I/O Ports

16.1 Overview

Table 16-1. Port Availability per Device

Device	PORTA	PORTB	PORTC
8-pin devices	●		
14/16-pin devices	●		●
20-pin devices	●	●	●

Each port has eight registers to control the operation. These registers are:

- PORTx registers (reads the levels on the pins of the device)
- LATx registers (output latch)
- TRISx registers (data direction)
- ANSELx registers (analog select)
- WPUx registers (weak pull-up)
- INLVLx (input level control)
- SLRCONx registers (slew rate control)
- ODCONx registers (open-drain control)

In this section, the generic names such as PORTx, LATx, TRISx, etc. can be associated with PORTA, PORTB, PORTC, etc., depending on availability per device.

A simplified model of a generic I/O port, without the interfaces to other peripherals, is shown in the following figure:

Figure 16-1. Generic I/O Port Operation

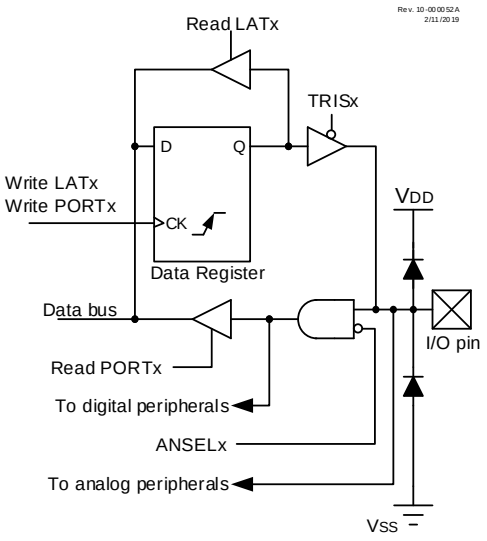

16.2 PORTx - Data Register

PORTx is a bidirectional port, and its corresponding data direction register is TRISx.

Reading the PORTx register reads the status of the pins, whereas writing to it will write to the PORT latch. All write operations are Read-Modify-Write operations. Therefore, a write to a port implies that the PORT pins are read, and this value is modified, then written to the PORT data latch (LATx). The PORT data latch LATx holds the output port data and contains the latest value of a LATx or PORTx write. The example below shows how to initialize PORTA.

Example 16-1. Initializing PORTA in Assembly

```
; This code example illustrates initializing the PORTA register.
; The other ports are initialized in the same manner.

    BANKSEL    PORTA        ;
    CLRF       PORTA        ;Clear PORTA
    BANKSEL    LATA         ;
    CLRF       LATA         ;Clear Data Latch
    BANKSEL    ANSELA       ;
    CLRF       ANSELA       ;Enable digital drivers
    BANKSEL    TRISA        ;
    MOVLW      B'00111000'  ;Set RA[5:3] as inputs
    MOVWF      TRISA        ;and set others as outputs
```

Example 16-2. Initializing PORTA in C

```
// This code example illustrates initializing the PORTA register.
// The other ports are initialized in the same manner.

    PORTA  = 0x00;       // Clear PORTA
    LATA   = 0x00;       // Clear Data Latch
    ANSELA = 0x00;       // Enable digital drivers
    TRISA  = 0x38;       // Set RA[5:3] as inputs and set others as outputs
```

Important: Most PORT pins share functions with device peripherals, both analog and digital. In general, when a peripheral is enabled on a PORT pin, that pin cannot be used as a general purpose output; however, the pin can still be read.

16.3 LATx - Output Latch

The Data Latch (LATx registers) is useful for Read-Modify-Write operations on the value that the I/O pins are driving.

A write operation to the LATx register has the same effect as a write to the corresponding PORTx register. A read of the LATx register reads of the values held in the I/O PORT latches, while a read of the PORTx register reads the actual I/O pin value.

Important: As a general rule, output operations to a port must use the LAT register to avoid Read-Modify-Write issues. For example, a bit set or clear operation reads the port, modifies the bit, and writes the result back to the port. When two bit operations are executed in succession, output loading on the changed bit may delay the change at the output in which case the bit will be misread in the second bit operation and written to an unexpected level. The LAT registers are isolated from the port loading and therefore changes are not delayed.

16.4 TRISx - Direction Control

The TRISx register controls the PORTx pin output drivers, even when the pins are being used as analog inputs. The user must ensure the bits in the TRISx register are set when using the pins as analog inputs. I/O pins configured as analog inputs always read '0'.

Setting a TRISx bit (TRISx = 1) will make the corresponding PORTx pin an input (i.e., disable the output driver). Clearing a TRISx bit (TRISx = 0) will make the corresponding PORTx pin an output (i.e., it enables output driver and puts the contents of the output latch on the selected pin).

16.5 ANSELx - Analog Control

Ports that support analog inputs have an associated ANSELx register. The ANSELx register is used to configure the Input mode of an I/O pin to analog. Setting an ANSELx bit high will disable the digital input buffer associated with that bit and cause the corresponding input value to always read '0', whether the value is read in PORTx register or selected by PPS as a peripheral input.

Disabling the input buffer prevents analog signal levels on the pin between a logic high and low from causing excessive current in the logic input circuitry.

The state of the ANSELx bits has no effect on digital or analog output functions. A pin with TRIS clear and ANSEL set will still operate as a digital output, but the Input mode will be analog. This can cause unexpected behavior when executing Read-Modify-Write instructions on the PORTx register.

Important: The ANSELx bits default to the Analog mode after Reset. To use any pins as digital general purpose or peripheral inputs, the corresponding ANSEL bits must be changed to '0' by the user.

16.6 WPUx - Weak Pull-Up Control

The WPUx register controls the individual weak pull-ups for each PORT pin. When a WPUx bit is set (WPUx = 1), the weak pull-up will be enabled for the corresponding pin. When a WPUx bit is cleared (WPUx = 0), the weak pull-up will be disabled for the corresponding pin.

16.7 INLVLx - Input Threshold Control

The INLVLx register controls the input voltage threshold for each of the available PORTx input pins. A selection between the Schmitt Trigger CMOS or the TTL compatible thresholds is available. If that feature is enabled, the input threshold is important in determining the value of a read of the PORTx register and also all other peripherals which are connected to the input. Refer to the I/O Ports table in the **"Electrical Specifications"** chapter for more details on threshold levels.

Important: Changing the input threshold selection must be performed while all peripheral modules are disabled. Changing the threshold level during the time a module is active may inadvertently generate a transition associated with an input pin, regardless of the actual voltage level on that pin.

16.8 SLRCONx - Slew Rate Control

The SLRCONx register controls the slew rate option for each PORT pin. Slew rate for each PORT pin can be controlled independently. When a SLRCONx bit is set (SLRCONx = 1), the corresponding PORT pin drive is slew

rate limited. When a SLRCONx bit is cleared (SLRCONx = 0), the corresponding PORT pin drive slews at the maximum rate possible.

16.9 ODCONx - Open-Drain Control

The ODCONx register controls the open-drain feature of the port. Open-drain operation is independently selected for each pin. When a ODCONx bit is set (ODCONx = 1), the corresponding port output becomes an open-drain driver capable of sinking current only. When a ODCONx bit is cleared (ODCONx = 0), the corresponding port output pin is the standard push-pull drive capable of sourcing and sinking current.

Important: It is necessary to set open-drain control when using the pin for I^2C.

16.10 Edge Selectable Interrupt-on-Change

An interrupt can be generated by detecting a signal at the PORT pin that has either a rising edge or a falling edge. Individual pins can be independently configured to generate an interrupt. Refer to the "**IOC - Interrupt-on-Change**" chapter for more details.

16.11 I^2C Pad Control

For this family of devices, the I^2C specific pads are available on RB4, RB6, RC0, and RC1 pins. The I^2C characteristics of each of these pins is controlled by the RxyI2C registers. These characteristics include enabling I^2C specific slew rate (over standard GPIO slew rate), selecting internal pull-ups for I^2C pins, and selecting appropriate input threshold as per SMBus specifications.

Important: Any peripheral using the I^2C pins reads the I^2C input levels when enabled via RxyI2C.

16.12 I/O Priorities

Each pin defaults to the data latch after Reset. Other functions are selected with the Peripheral Pin Select logic. Refer to the **"PPS - Peripheral Pin Select Module"** chapter for more details.

Analog input functions, such as ADC and comparator inputs, are not shown in the Peripheral Pin Select lists. These inputs are active when the I/O pin is set for Analog mode using the ANSELx register. Digital output functions may continue to control the pin when it is in Analog mode.

Analog outputs, when enabled, take priority over digital outputs and force the digital output driver into a High-Impedance state.

The pin function priorities are as follows:

1. Port functions determined by the Configuration bits.
2. Analog outputs (input buffers must be disabled).
3. Analog inputs.
4. Port inputs and outputs from PPS.

16.13 $\overline{MCLR}$/V_{PP}/RA3 Pin

The $\overline{MCLR}$/V_{PP} pin is an input-only pin. Its operation is controlled by the MCLRE Configuration bit. When selected as a PORT pin (MCLRE = 0), it functions as a digital input-only pin; as such, it does not have TRISx and LATx bits associated with its operation. Otherwise, it functions as the device's Master Clear input. In either configuration, the $\overline{MCLR}$/V_{PP} pin also functions as the programming voltage input pin during high-voltage programming.

The $\overline{MCLR}$/V_{PP} pin is a read-only bit and will read '1' when MCLRE = 1 (i.e., Master Clear enabled).

Important: On a Power-on Reset (POR), the $\overline{MCLR}$/V_{PP} pin is enabled as a digital input-only if Master Clear functionality is disabled.

The $\overline{MCLR}$/V_{PP} pin has an individually controlled internal weak pull-up. When set, the corresponding WPU bit enables the pull-up. When the $\overline{MCLR}$/V_{PP} pin is configured as $\overline{MCLR}$ (MCLRE = 1 and LVP = 0), or configured for Low-Voltage Programming (MCLRE = x and LVP = 1), the pull-up is always enabled and the WPU bit has no effect.

16.14 Register Definitions: Port Control

16.14.1 PORTx

Name: PORTx

PORTx Register

Bit	7	6	5	4	3	2	1	0
	Rx7	Rx6	Rx5	Rx4	Rx3	Rx2	Rx1	Rx0
Access	R/W	R/W	R/W	R/W	R/W	R/W	R/W	R/W
Reset	x	x	x	x	x	x	x	x

Bits 0, 1, 2, 3, 4, 5, 6, 7 – Rxn Port I/O Value
Reset States: POR/BOR = xxxxxxxx
All Other Resets = uuuuuuuu

Value	Description
1	PORT pin is ≥ V_{IH}
0	PORT pin is ≤ V_{IL}

Important:

- Writes to PORTx are actually written to the corresponding LATx register. Reads from PORTx register return actual I/O pin values.
- The PORT bit associated with the $\overline{MCLR}$ pin is read-only and will read '1' when the $\overline{MCLR}$ function is enabled (LVP = 1 or (LVP = 0 and MCLRE = 1))
- Refer to the **"Pin Allocation Table"** for details about $\overline{MCLR}$ pin and pin availability per port
- Unimplemented bits will read back as '0'

16.14.2 LATx

Name: LATx

Output Latch Register

Bit	7	6	5	4	3	2	1	0
	LATx7	LATx6	LATx5	LATx4	LATx3	LATx2	LATx1	LATx0
Access	R/W	R/W	R/W	R/W	R/W	R/W	R/W	R/W
Reset	x	x	x	x	x	x	x	x

Bits 0, 1, 2, 3, 4, 5, 6, 7 – LATxn Output Latch Value
Reset States: POR/BOR = xxxxxxxx
All Other Resets = uuuuuuuu

Important:

- Writes to LATx are equivalent to writes to the corresponding PORTx register. Reads from LATx register return register values, not I/O pin values.
- Refer to the **"Pin Allocation Table"** for details about pin availability per port
- Unimplemented bits will read back as '0'

16.14.3 TRISx

Name: TRISx

Tri-State Control Register

Bit	7	6	5	4	3	2	1	0
	TRISx7	TRISx6	TRISx5	TRISx4	TRISx3	TRISx2	TRISx1	TRISx0
Access	R/W	R/W	R/W	R/W	R/W	R/W	R/W	R/W
Reset	1	1	1	1	1	1	1	1

Bits 0, 1, 2, 3, 4, 5, 6, 7 – TRISxn Port I/O Tri-state Control

Value	Description
1	PORTx output driver is disabled. PORTx pin configured as an input (tri-stated)
0	PORTx output driver is enabled. PORTx pin configured as an output

Important:

- The TRIS bit associated with the $\overline{\text{MCLR}}$ pin is read-only and the value is '1'
- Refer to the **"Pin Allocation Table"** for details about $\overline{\text{MCLR}}$ pin and pin availability per port
- Unimplemented bits will read back as '0'

16.14.4 ANSELx

Name: ANSELx

Analog Select Register

Bit	7	6	5	4	3	2	1	0
	ANSELx7	ANSELx6	ANSELx5	ANSELx4	ANSELx3	ANSELx2	ANSELx1	ANSELx0
Access	R/W	R/W	R/W	R/W	R/W	R/W	R/W	R/W
Reset	1	1	1	1	1	1	1	1

Bits 0, 1, 2, 3, 4, 5, 6, 7 – ANSELxn Analog Select on RX Pin

Value	Description
1	Analog input. Pin is assigned as analog input. Digital input buffer disabled.
0	Digital I/O. Pin is assigned to port or digital special function.

Important:

- When setting a pin as an analog input, the corresponding TRIS bit must be set to Input mode to allow external control of the voltage on the pin
- Refer to the "**Pin Allocation Table**" for details about pin availability per port
- Unimplemented bits will read back as '0'

16.14.5 WPUx

Name: WPUx

Weak Pull-Up Register

Bit	7	6	5	4	3	2	1	0
	WPUx7	WPUx6	WPUx5	WPUx4	WPUx3	WPUx2	WPUx1	WPUx0
Access	R/W	R/W	R/W	R/W	R/W	R/W	R/W	R/W
Reset	0	0	0	0	0	0	0	0

Bits 0, 1, 2, 3, 4, 5, 6, 7 – WPUxn Weak Pull-up PORTx Control

Value	Description
1	Weak pull-up enabled
0	Weak pull-up disabled

Important:

- The weak pull-up device is automatically disabled if the pin is configured as an output, but this register remains unchanged
- If MCLRE = 1, the weak pull-up on $\overline{\text{MCLR}}$ pin is always enabled and the corresponding WPU bit is not affected
- Refer to the **"Pin Allocation Table"** for details about pin availability per port
- Unimplemented bits will read back as '0'

16.14.6 INLVLx

Name: INLVLx

Input Level Control Register

Bit	7	6	5	4	3	2	1	0
	INLVLx7	INLVLx6	INLVLx5	INLVLx4	INLVLx3	INLVLx2	INLVLx1	INLVLx0
Access	R/W	R/W	R/W	R/W	R/W	R/W	R/W	R/W
Reset	1	1	1	1	1	1	1	1

Bits 0, 1, 2, 3, 4, 5, 6, 7 – INLVLxn Input Level Select on RX Pin

Value	Description
1	ST input used for port reads and interrupt-on-change
0	TTL input used for port reads and interrupt-on-change

Important:
- Refer to the "**Pin Allocation Table**" for details about pin availability per port
- Unimplemented bits will read back as '0'

16.14.7 SLRCONx

Name: SLRCONx

Slew Rate Control Register

Bit	7	6	5	4	3	2	1	0
	SLRx7	SLRx6	SLRx5	SLRx4	SLRx3	SLRx2	SLRx1	SLRx0
Access	R/W	R/W	R/W	R/W	R/W	R/W	R/W	R/W
Reset	1	1	1	1	1	1	1	1

Bits 0, 1, 2, 3, 4, 5, 6, 7 – SLRxn Slew Rate Control on RX Pin

Value	Description
1	PORT pin slew rate is limited
0	PORT pin slews at maximum rate

Important:
- Refer to the "**Pin Allocation Table**" for details about pin availability per port
- Unimplemented bits will read back as '0'

16.14.8 ODCONx

Name: ODCONx

Open-Drain Control Register

Bit	7	6	5	4	3	2	1	0
	ODCx7	ODCx6	ODCx5	ODCx4	ODCx3	ODCx2	ODCx1	ODCx0
Access	R/W	R/W	R/W	R/W	R/W	R/W	R/W	R/W
Reset	0	0	0	0	0	0	0	0

Bits 0, 1, 2, 3, 4, 5, 6, 7 – ODCxn Open-Drain Configuration on Rx Pin

Value	Description
1	PORT pin operates as open-drain drive (sink current only)
0	PORT pin operates as standard push-pull drive (source and sink current)

Important:
- Refer to the "**Pin Allocation Table**" for details about pin availability per port
- Unimplemented bits will read back as '0'

16.14.9 RxyI2C

Name: RxyI2C

I^2C Pad Rxy Control Register

Bit	7	6	5	4	3	2	1	0
	SLEW[1:0]		PU[1:0]				TH[1:0]	
Access	R/W	R/W	R/W	R/W			R/W	R/W
Reset	0	0	0	0			0	0

Bits 7:6 – SLEW[1:0] I^2C Specific Slew Rate Limiting Control

Value	Description
11	I^2C Fast mode Plus (1 MHz) slew rate enabled. The SLRxy bit is ignored.
10	Reserved
01	I^2C Fast mode (400 kHz) slew rate enabled. The SLRxy bit is ignored.
00	Standard GPIO Slew Rate; enabled/disabled via SLRxy bit

Bits 5:4 – PU[1:0] I^2C Pull-up Selection

Value	Description
11	Reserved
10	10x current of standard weak pull-up
01	2x current of standard weak pull-up
00	Standard GPIO weak pull-up, enabled via WPUxy bit

Bits 1:0 – TH[1:0] I^2C Input Threshold Selection

Value	Description
11	Reserved
10	SMBus 2.0 (2.1V) input threshold
01	I^2C-specific input thresholds
00	Standard GPIO Input pull-up, enabled via INLVLxy registers

Important: Refer to the **"Pin Allocation Table"** for details about I^2C compatible pins.

16.15 Register Summary - IO Ports

Offset	Name	Bit Pos.	7	6	5	4	3	2	1	0
0x00 ... 0x0B	Reserved									
0x0C	PORTA	7:0			RA5	RA4	RA3	RA2	RA1	RA0
0x0D	PORTB	7:0	RB7	RB6	RB5	RB4				
0x0E	PORTC	7:0	RC7	RC6	RC5	RC4	RC3	RC2	RC1	RC0
0x0F ... 0x11	Reserved									
0x12	TRISA	7:0			TRISA5	TRISA4	Reserved	TRISA2	TRISA1	TRISA0
0x13	TRISB	7:0	TRISB7	TRISB6	TRISB5	TRISB4				
0x14	TRISC	7:0	TRISC7	TRISC6	TRISC5	TRISC4	TRISC3	TRISC2	TRISC1	TRISC0
0x15 ... 0x17	Reserved									
0x18	LATA	7:0			LATA5	LATA4		LATA2	LATA1	LATA0
0x19	LATB	7:0	LATB7	LATB6	LATB5	LATB4				
0x1A	LATC	7:0	LATC7	LATC6	LATC5	LATC4	LATC3	LATC2	LATC1	LATC0
0x1B ... 0x010B	Reserved									
0x010C	RB4I2C	7:0	SLEW[1:0]		PU[1:0]				TH[1:0]	
0x010D	RB6I2C	7:0	SLEW[1:0]		PU[1:0]				TH[1:0]	
0x010E	RC0I2C	7:0	SLEW[1:0]		PU[1:0]				TH[1:0]	
0x010F	RC1I2C	7:0	SLEW[1:0]		PU[1:0]				TH[1:0]	
0x0110 ... 0x1F37	Reserved									
0x1F38	ANSELA	7:0			ANSELA5	ANSELA4	ANSELA3	ANSELA2	ANSELA1	ANSELA0
0x1F39	WPUA	7:0			WPUA5	WPUA4	WPUA3	WPUA2	WPUA1	WPUA0
0x1F3A	ODCONA	7:0			ODCA5	ODCA4		ODCA2	ODCA1	ODCA0
0x1F3B	SLRCONA	7:0			SLRA5	SLRA4		SLRA2	SLRA1	SLRA0
0x1F3C	INLVLA	7:0			INLVLA5	INLVLA4	INLVLA3	INLVLA2	INLVLA1	INLVLA0
0x1F3D ... 0x1F42	Reserved									
0x1F43	ANSELB	7:0	ANSELB7	ANSELB6	ANSELB5	ANSELB4				
0x1F44	WPUB	7:0	WPUB7	WPUB6	WPUB5	WPUB4				
0x1F45	ODCONB	7:0	ODCB7	ODCB6	ODCB5	ODCB4				
0x1F46	SLRCONB	7:0	SLRB7	SLRB6	SLRB5	SLRB4				
0x1F47	INLVLB	7:0	INLVLB7	INLVLB6	INLVLB5	INLVLB4				
0x1F48 ... 0x1F4D	Reserved									
0x1F4E	ANSELC	7:0	ANSELC7	ANSELC6	ANSELC5	ANSELC4	ANSELC3	ANSELC2	ANSELC1	ANSELC0
0x1F4F	WPUC	7:0	WPUC7	WPUC6	WPUC5	WPUC4	WPUC3	WPUC2	WPUC1	WPUC0
0x1F50	ODCONC	7:0	ODCC7	ODCC6	ODCC5	ODCC4	ODCC3	ODCC2	ODCC1	ODCC0
0x1F51	SLRCONC	7:0	SLRC7	SLRC6	SLRC5	SLRC4	SLRC3	SLRC2	SLRC1	SLRC0
0x1F52	INLVLC	7:0	INLVLC7	INLVLC6	INLVLC5	INLVLC4	INLVLC3	INLVLC2	INLVLC1	INLVLC0

17. IOC - Interrupt-on-Change

17.1 Overview

The pins denoted in the table below can be configured to operate as interrupt-on-change (IOC) pins for this device. An interrupt can be generated by detecting a signal that has either a rising edge or a falling edge. Any individual PORT pin, or combination of PORT pins, can be configured to generate an interrupt.

Table 17-1. IOC Pin Availability per Device

Device	PORTA	PORTB	PORTC
8-pin devices	•		
14/16-pin devices	•		•
20-pin devices	•	•	•

Important: If MCLRE = 1 or LVP = 1, the $\overline{\text{MCLR}}$ pin port functionality is disabled and IOC on that pin is not available.

The interrupt-on-change module has the following features:

- Interrupt-on-change enable (Host Switch)
- Individual pin configuration
- Rising and falling edge detection
- Individual pin interrupt flags

The following figure is a block diagram of the IOC module.

Figure 17-1. Interrupt-on-Change Block Diagram (PORTA Example)

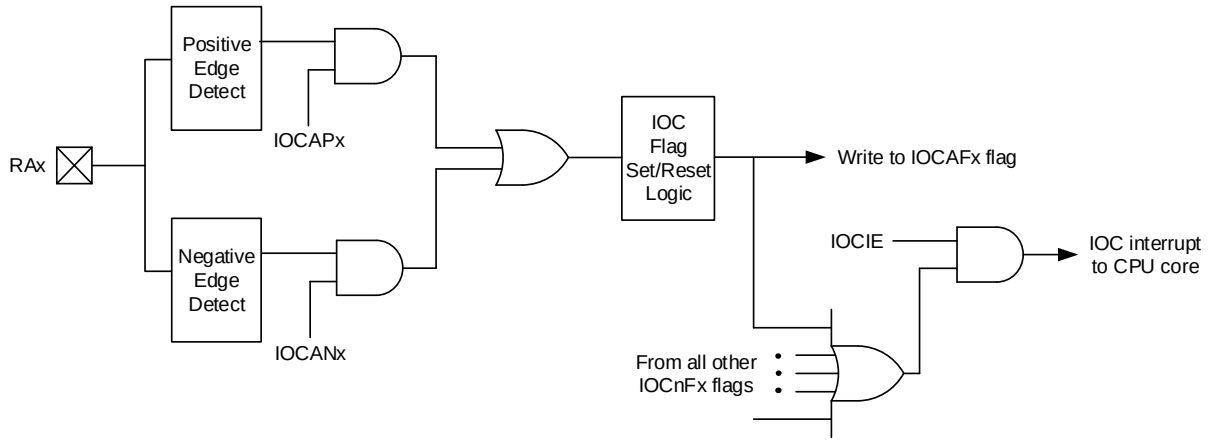

17.2 Enabling the Module

For individual PORT pins to generate an interrupt, the IOC Interrupt Enable (IOCIE) bit of the Peripheral Interrupt Enable (PIEx) register must be set. If the IOC Interrupt Enable bit is disabled, the edge detection on the pin will still occur, but an interrupt will not be generated.

17.3 Individual Pin Configuration

A rising edge detector and a falling edge detector are present for each PORT pin. To enable a pin to detect a rising edge, the associated bit of the IOCxP register must be set. To enable a pin to detect a falling edge, the associated bit of the IOCxN register must be set. A PORT pin can be configured to detect rising and falling edges simultaneously by setting both associated bits of the IOCxP and IOCxN registers, respectively.

17.4 Interrupt Flags

The bits located in the IOCxF registers are status flags that correspond to the interrupt-on-change pins of each port. If an expected edge is detected on an appropriately enabled pin, then the status flag for that pin will be set, and an interrupt will be generated if the IOCIE bit is set. The IOCIF bit located in the corresponding Peripheral Interrupt Request (PIRx) register, is all the IOCxF bits ORd together. The IOCIF bit is read-only. All of the IOCxF Status bits must be cleared to clear the IOCIF bit.

17.5 Clearing Interrupt Flags

The individual status flags (IOCxF register bits) will be cleared by resetting them to zero. If another edge is detected during this clearing operation, the associated status flag will be set at the end of the sequence, regardless of the value actually being written.

To ensure that no detected edge is lost while clearing flags, only `AND` operations masking out known changed bits must be performed. The following sequence is an example of clearing an IOC interrupt flag using this method.

Example 17-1. Clearing Interrupt Flags (PORTA Example)

```
MOVLW    0xff
XORWF    IOCAF, W
ANDWF    IOCAF, F
```

17.6 Operation in Sleep

An interrupt-on-change event will wake the device from Sleep mode, if the IOCIE bit is set. If an edge is detected while in Sleep mode, the IOCxF register will be updated prior to the first instruction executed out of Sleep.

17.7 Register Definitions: Interrupt-on-Change Control

17.7.1 IOCxF

Name: IOCxF

Interrupt-on-Change Flag Register

Bit	7	6	5	4	3	2	1	0
	IOCxF7	IOCxF6	IOCxF5	IOCxF4	IOCxF3	IOCxF2	IOCxF1	IOCxF0
Access	R/W/HS	R/W/HS	R/W/HS	R/W/HS	R/W/HS	R/W/HS	R/W/HS	R/W/HS
Reset	0	0	0	0	0	0	0	0

Bits 0, 1, 2, 3, 4, 5, 6, 7 – IOCxFn Interrupt-on-Change Flag

Value	Condition	Description
1	IOCxP[n] = 1	A positive edge was detected on the Rx[n] pin
1	IOCxN[n] = 1	A negative edge was detected on the Rx[n] pin
0	IOCxP[n] = x and IOCxN[n] = x	No change was detected, or the user cleared the detected change

Important:

- If MCLRE = 1 or LVP = 1, the $\overline{\text{MCLR}}$ pin port functionality is disabled and IOC on that pin is not available
- Refer to the **"Pin Allocation Table"** for details about pins with configurable IOC per port

17.7.2 IOCxN

Name: IOCxN

Interrupt-on-Change Negative Edge Register Example

Bit	7	6	5	4	3	2	1	0
	IOCxN7	IOCxN6	IOCxN5	IOCxN4	IOCxN3	IOCxN2	IOCxN1	IOCxN0
Access	R/W	R/W	R/W	R/W	R/W	R/W	R/W	R/W
Reset	0	0	0	0	0	0	0	0

Bits 0, 1, 2, 3, 4, 5, 6, 7 – IOCxNn Interrupt-on-Change Negative Edge Enable

Value	Description
1	Interrupt-on-change enabled on the IOCx pin for a negative-going edge. Associated Status bit and interrupt flag will be set upon detecting an edge.
0	Falling edge interrupt-on-change disabled for the associated pin

Important:

- If MCLRE = 1 or LVP = 1, the $\overline{\text{MCLR}}$ pin port functionality is disabled and IOC on that pin is not available
- Refer to the **"Pin Allocation Table"** for details about pins with configurable IOC per port

17.7.3 IOCxP

Name: IOCxP

Interrupt-on-Change Positive Edge Register

Bit	7	6	5	4	3	2	1	0
	IOCxP7	IOCxP6	IOCxP5	IOCxP4	IOCxP3	IOCxP2	IOCxP1	IOCxP0
Access	R/W	R/W	R/W	R/W	R/W	R/W	R/W	R/W
Reset	0	0	0	0	0	0	0	0

Bits 0, 1, 2, 3, 4, 5, 6, 7 – IOCxPn Interrupt-on-Change Positive Edge Enable

Value	Description
1	Interrupt-on-change enabled on the IOCx pin for a positive-going edge. Associated Status bit and interrupt flag will be set upon detecting an edge.
0	Rising edge interrupt-on-change disabled for the associated pin.

Important:

- If MCLRE = 1 or LVP = 1, the $\overline{\text{MCLR}}$ pin port functionality is disabled and IOC on that pin is not available
- Refer to the **"Pin Allocation Table"** for details about pins with configurable IOC per port

17.8 Register Summary - Interrupt-on-Change

Offset	Name	Bit Pos.	7	6	5	4	3	2	1	0
0x00 ... 0x1F3C	Reserved									
0x1F3D	IOCAP	7:0			IOCAP5	IOCAP4	IOCAP3	IOCAP2	IOCAP1	IOCAP0
0x1F3E	IOCAN	7:0			IOCAN5	IOCAN4	IOCAN3	IOCAN2	IOCAN1	IOCAN0
0x1F3F	IOCAF	7:0			IOCAF5	IOCAF4	IOCAF3	IOCAF2	IOCAF1	IOCAF0
0x1F40 ... 0x1F47	Reserved									
0x1F48	IOCBP	7:0	IOCBP7	IOCBP6	IOCBP5	IOCBP4				
0x1F49	IOCBN	7:0	IOCBN7	IOCBN6	IOCBN5	IOCBN4				
0x1F4A	IOCBF	7:0	IOCBF7	IOCBF6	IOCBF5	IOCBF4				
0x1F4B ... 0x1F52	Reserved									
0x1F53	IOCCP	7:0	IOCCP7	IOCCP6	IOCCP5	IOCCP4	IOCCP3	IOCCP2	IOCCP1	IOCCP0
0x1F54	IOCCN	7:0	IOCCN7	IOCCN6	IOCCN5	IOCCN4	IOCCN3	IOCCN2	IOCCN1	IOCCN0
0x1F55	IOCCF	7:0	IOCCF7	IOCCF6	IOCCF5	IOCCF4	IOCCF3	IOCCF2	IOCCF1	IOCCF0

© 2020-2022 Microchip Technology Inc.
and its subsidiaries

18. PPS - Peripheral Pin Select Module

18.1 Overview

The Peripheral Pin Select (PPS) module connects peripheral inputs and outputs to the device I/O pins. Only digital signals are included in the selections.

Important: All analog inputs and outputs remain fixed to their assigned pins and cannot be changed through PPS.

Input and output selections are independent as shown in the figure below.

Figure 18-1. PPS Block Diagram

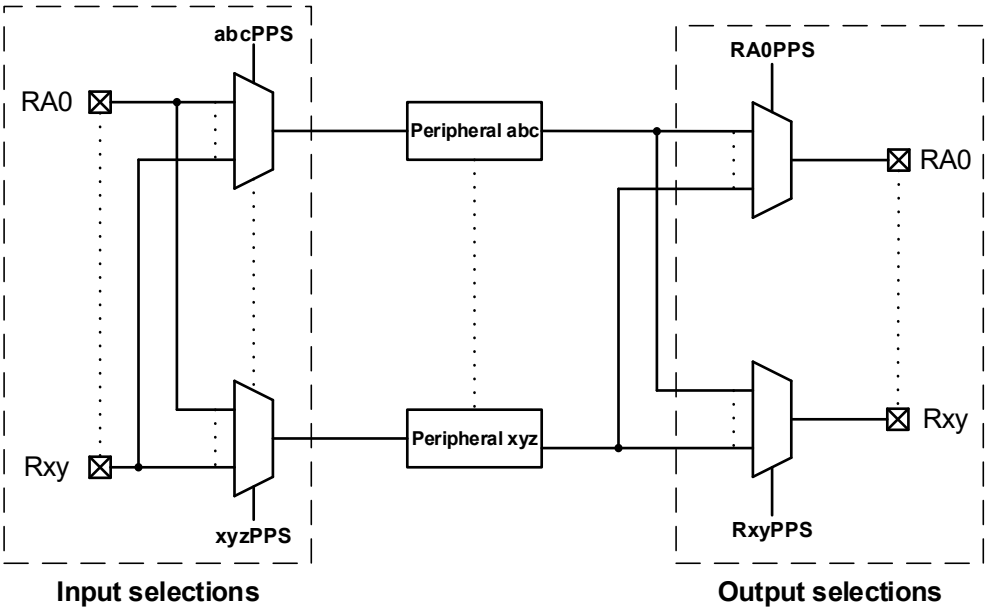

18.2 PPS Inputs

Each digital peripheral has a dedicated PPS Peripheral Input Selection (xxxPPS) register with which the input pin to the peripheral is selected. Devices that have 20 leads or less (8/14/16/20) allow PPS routing to any I/O pin, while devices with 28 leads or more allow PPS routing to I/Os contained within two ports (see the table below).

Important: The notation “xxx” in the generic register name is a placeholder for the peripheral identifier. For example, xxx = T0CKI for the T0CKIPPS register.

Multiple peripherals can operate from the same source simultaneously. Port reads always return the pin level regardless of peripheral PPS selection. If a pin also has analog functions associated, the ANSEL bit for that pin must be cleared to enable the digital input buffer.

Table 18-1. PPS Input Selection Table

Peripheral	PPS Input Register	Default Pin Selection at POR		
		8-Pin Devices	14/16-Pin Devices	20-Pin Devices
External Interrupt	INTPPS	**RA2**		
Timer0 Clock	T0CKIPPS	**RA2**		
Timer1 Clock	T1CKIPPS	**RA5**		
Timer1 Gate	T1GPPS	**RA4**		
Timer2 Input	T2INPPS	**RA5**		
CCP1	CCP1PPS	**RA5**	**RC5**	**RC5**
CCP2	CCP2PPS	**RA5**	**RC3**	**RC3**
SCL1/SCK1	SSP1CLKPPS(1)	**RA1**	**RC0**	**RB4**
SDA1/SDI1	SSP1DATPPS(1)	**RA2**	**RC1**	**RB6**
$\overline{SS1}$	SSP1SSPPS	**RA3**	**RC3**	**RC6**
RX1/DT1	RX1PPS	**RA1**	**RC5**	**RB5**
CK1	CK1PPS	**RA0**	**RC4**	**RB7**
ADC Conversion Trigger	ADACTPPS	**RA5**	**RC2**	**RC2**

Note:
1. Bidirectional pin. The corresponding output must select the same pin.

18.3 PPS Outputs

Each digital peripheral has a dedicated Pin Rxy Output Source Selection (RxyPPS) register with which the pin output source is selected. With few exceptions, the port TRIS control associated with that pin retains control over the pin output driver. Peripherals that control the pin output driver as part of the peripheral operation will override the TRIS control as needed. The I^2C module is an example of such a peripheral.

Important: The notation 'Rxy' is a placeholder for the pin identifier. The 'x' holds the place of the PORT letter and the 'y' holds the place of the bit number. For example, Rxy = RA0 for the RA0PPS register.

The table below shows the output codes for each peripheral, as well as the available Port selections.

Table 18-2. PPS Output Selection Table

RxyPPS	Output Source
0x09	TMR0
0x08	SDA1/SDO1(1)
0x07	SCL1/SCK1(1)
0x06	DT1
0x05	TX1/CK1
0x04	PWM4
0x03	PWM3
0x02	CCP2
0x01	CCP1
0x00	LATxy

Note:
1. Bidirectional pin. The corresponding input must select the same pin.

18.4 Bidirectional Pins

PPS selections for peripherals with bidirectional signals on a single pin must be made so that the PPS input and PPS output select the same pin. The I^{2}C Serial Clock (SCL) and Serial Data (SDA) are examples of such pins.

Important: The I^{2}C default pins and a limited number of other alternate pins are I^{2}C and SMBus compatible. SDA and SCL signals can be routed to any pin; however, pins without I^{2}C compatibility will operate at standard TTL/ST logic levels as selected by the port's INLVL register.

18.5 PPS Lock

The PPS module provides an extra layer of protection to prevent inadvertent changes to the PPS selection registers. The PPSLOCKED bit is used in combination with specific code execution blocks to lock/unlock the PPS selection registers.

Important: The PPSLOCKED bit is clear by default (PPSLOCKED = `0`), which allows the PPS selection registers to be modified without an unlock sequence.

PPS selection registers are locked when the PPSLOCKED bit is set (PPSLOCKED = `1`). Setting the PPSLOCKED bit requires a specific lock sequence as shown in the examples below in both C and assembly languages.

PPS selection registers are unlocked when the PPSLOCKED bit is clear (PPSLOCKED = `0`). Clearing the PPSLOCKED bit requires a specific unlock sequence as shown in the examples below in both C and assembly languages.

Important: All interrupts must be disabled before starting the lock/unlock sequence to ensure proper execution.

Example 18-1. PPS Lock Sequence (assembly language)

```
; suspend interrupts
   BCF      INTCON0,GIE
   BANKSEL  PPSLOCK
; required sequence, next 5 instructions
   MOVLW    0x55
   MOVWF    PPSLOCK
   MOVLW    0xAA
   MOVWF    PPSLOCK
; Set PPSLOCKED bit
   BSF      PPSLOCK,PPSLOCKED
; restore interrupts
   BSF      INTCON0,GIE
```

Example 18-2. PPS Lock Sequence (C language)

```
INTCON0bits.GIE = 0;          //Suspend interrupts
PPSLOCK = 0x55;               //Required sequence
PPSLOCK = 0xAA;               //Required sequence
PPSLOCKbits.PPSLOCKED = 1;    //Set PPSLOCKED bit
INTCON0bits.GIE = 1;          //Restore interrupts
```

Example 18-3. PPS Unlock Sequence (assembly language)

```
; suspend interrupts
   BCF      INTCON0,GIE
   BANKSEL  PPSLOCK
; required sequence, next 5 instructions
   MOVLW    0x55
   MOVWF    PPSLOCK
   MOVLW    0xAA
   MOVWF    PPSLOCK
; Clear PPSLOCKED bit
   BCF      PPSLOCK,PPSLOCKED
; restore interrupts
   BSF      INTCON0,GIE
```

Example 18-4. PPS Unlock Sequence (C language)

```
INTCON0bits.GIE = 0;          //Suspend interrupts
PPSLOCK = 0x55;               //Required sequence
PPSLOCK = 0xAA;               //Required sequence
PPSLOCKbits.PPSLOCKED = 0;    //Clear PPSLOCKED bit
INTCON0bits.GIE = 1;          //Restore interrupts
```

18.5.1 PPS One-Way Lock

The PPS1WAY Configuration bit can also be used to prevent inadvertent modification to the PPS selection registers.

When the PPS1WAY bit is set (PPS1WAY = 1), the PPSLOCKED bit can only be set one time after a device Reset. Once the PPSLOCKED bit has been set, it cannot be cleared again unless a device Reset is executed.

When the PPS1WAY bit is clear (PPS1WAY = 0), the PPSLOCKED bit can be set or cleared as needed; however, the PPS lock/unlock sequences must be executed.

18.6 Operation During Sleep

PPS input and output selections are unaffected by Sleep.

18.7 Effects of a Reset

A device Power-on Reset (POR) or Brown-out Reset (BOR) returns all PPS input selection registers to their default values and clears all PPS output selection registers. All other Resets leave the selections unchanged. Default input selections are shown in the PPS input register details table. The PPSLOCKED bit is cleared in all Reset conditions.

18.8 Register Definitions: Peripheral Pin Select (PPS)

18.8.1 xxxPPS

Name: xxxPPS

Peripheral Input Selection Register

Bit	7	6	5	4	3	2	1	0
			PORT[2:0]			PIN[2:0]		
Access			R/W	R/W	R/W	R/W	R/W	R/W
Reset			m	m	m	m	m	m

Bits 5:3 – PORT[2:0] Peripheral Input PORT Selection[1]
See the PPS Input Selection Table for the list of available Ports and default pin locations.
Reset States: POR = mmm
All other Resets = uuu

Value	Description
010	PORTC
001	PORTB
000	PORTA

Bits 2:0 – PIN[2:0] Peripheral Input PORT Pin Selection[2]
Reset States: POR = mmm
All other Resets = uuu

Value	Description
111	Peripheral input is from PORTx Pin 7 (Rx7)
110	Peripheral input is from PORTx Pin 6 (Rx6)
101	Peripheral input is from PORTx Pin 5 (Rx5)
100	Peripheral input is from PORTx Pin 4 (Rx4)
011	Peripheral input is from PORTx Pin 3 (Rx3)
010	Peripheral input is from PORTx Pin 2 (Rx2)
001	Peripheral input is from PORTx Pin 1 (Rx1)
000	Peripheral input is from PORTx Pin 0 (Rx0)

Notes:
1. The Reset value ‘m’ is determined by device default locations for that input.
2. Refer to the **“Pin Allocation Table”** for details about available pins per port.

18.8.2 RxyPPS

Name: RxyPPS

Pin Rxy Output Source Selection Register

Bit	7	6	5	4	3	2	1	0
			RxyPPS[5:0]					
Access			R/W	R/W	R/W	R/W	R/W	R/W
Reset			0	0	0	0	0	0

Bits 5:0 – RxyPPS[5:0] Pin Rxy Output Source Selection

Output Signal Name	Value to Write to Register
TMR0	0x09
SDA1/SDO1	0x08
SCL1/SCK1	0x07
DT1	0x06
TX1	0x05
PWM4	0x04
PWM3	0x03
CCP2	0x02
CCP1	0x01
LATxy	0x00

Reset States: POR = 000000
All other Resets = uuuuuu

18.8.3 PPSLOCK

Name: PPSLOCK

PPS Lock Register

Bit	7	6	5	4	3	2	1	0
								PPSLOCKED
Access								R/W
Reset								0

Bit 0 – PPSLOCKED PPS Locked
Reset States: POR = 0
All other Resets = 0

Value	Description
1	PPS is locked. PPS selections cannot be changed. Writes to any PPS register are ignored.
0	PPS is not locked. PPS selections can be changed, but may require the PPS lock/unlock sequence.

18.9 Register Summary - Peripheral Pin Select Module

Offset	Name	Bit Pos.	7	6	5	4	3	2	1	0
0x00 ... 0x1E8E	Reserved									
0x1E8F	PPSLOCK	7:0								PPSLOCKED
0x1E90	INTPPS	7:0			PORT[2:0]			PIN[2:0]		
0x1E91	T0CKIPPS	7:0			PORT[2:0]			PIN[2:0]		
0x1E92	T1CKIPPS	7:0			PORT[2:0]			PIN[2:0]		
0x1E93	T1GPPS	7:0			PORT[2:0]			PIN[2:0]		
0x1E94 ... 0x1E9B	Reserved									
0x1E9C	T2INPPS	7:0			PORT[2:0]			PIN[2:0]		
0x1E9D ... 0x1EA0	Reserved									
0x1EA1	CCP1PPS	7:0			PORT[2:0]			PIN[2:0]		
0x1EA2	CCP2PPS	7:0			PORT[2:0]			PIN[2:0]		
0x1EA3 ... 0x1EC2	Reserved									
0x1EC3	ADACTPPS	7:0			PORT[2:0]			PIN[2:0]		
0x1EC4	Reserved									
0x1EC5	SSP1CLKPPS	7:0			PORT[2:0]			PIN[2:0]		
0x1EC6	SSP1DATPPS	7:0			PORT[2:0]			PIN[2:0]		
0x1EC7	SSP1SSPPS	7:0			PORT[2:0]			PIN[2:0]		
0x1EC8 ... 0x1ECA	Reserved									
0x1ECB	RX1PPS	7:0			PORT[2:0]			PIN[2:0]		
0x1ECC	CK1PPS	7:0			PORT[2:0]			PIN[2:0]		
0x1ECD ... 0x1F0F	Reserved									
0x1F10	RA0PPS	7:0			RA0PPS[5:0]					
0x1F11	RA1PPS	7:0			RA1PPS[5:0]					
0x1F12	RA2PPS	7:0			RA2PPS[5:0]					
0x1F13	Reserved									
0x1F14	RA4PPS	7:0			RA4PPS[5:0]					
0x1F15	RA5PPS	7:0			RA5PPS[5:0]					
0x1F16 ... 0x1F1B	Reserved									
0x1F1C	RB4PPS	7:0			RB4PPS[5:0]					
0x1F1D	RB5PPS	7:0			RB5PPS[5:0]					
0x1F1E	RB6PPS	7:0			RB6PPS[5:0]					
0x1F1F	RB7PPS	7:0			RB7PPS[5:0]					
0x1F20	RC0PPS	7:0			RC0PPS[5:0]					
0x1F21	RC1PPS	7:0			RC1PPS[5:0]					
0x1F22	RC2PPS	7:0			RC2PPS[5:0]					
0x1F23	RC3PPS	7:0			RC3PPS[5:0]					
0x1F24	RC4PPS	7:0			RC4PPS[5:0]					
0x1F25	RC5PPS	7:0			RC5PPS[5:0]					
0x1F26	RC6PPS	7:0			RC6PPS[5:0]					
0x1F27	RC7PPS	7:0			RC7PPS[5:0]					

19. TMR0 - Timer0 Module

The Timer0 module has the following features:

- 8-bit timer with programmable period
- 16-bit timer
- Selectable clock sources
- Synchronous and asynchronous operation
- Programmable prescaler (Independent of Watchdog Timer)
- Programmable postscaler
- Interrupt on match or overflow
- Output on I/O pin (via PPS) or to other peripherals
- Operation during Sleep

Figure 19-1. Timer0 Block Diagram

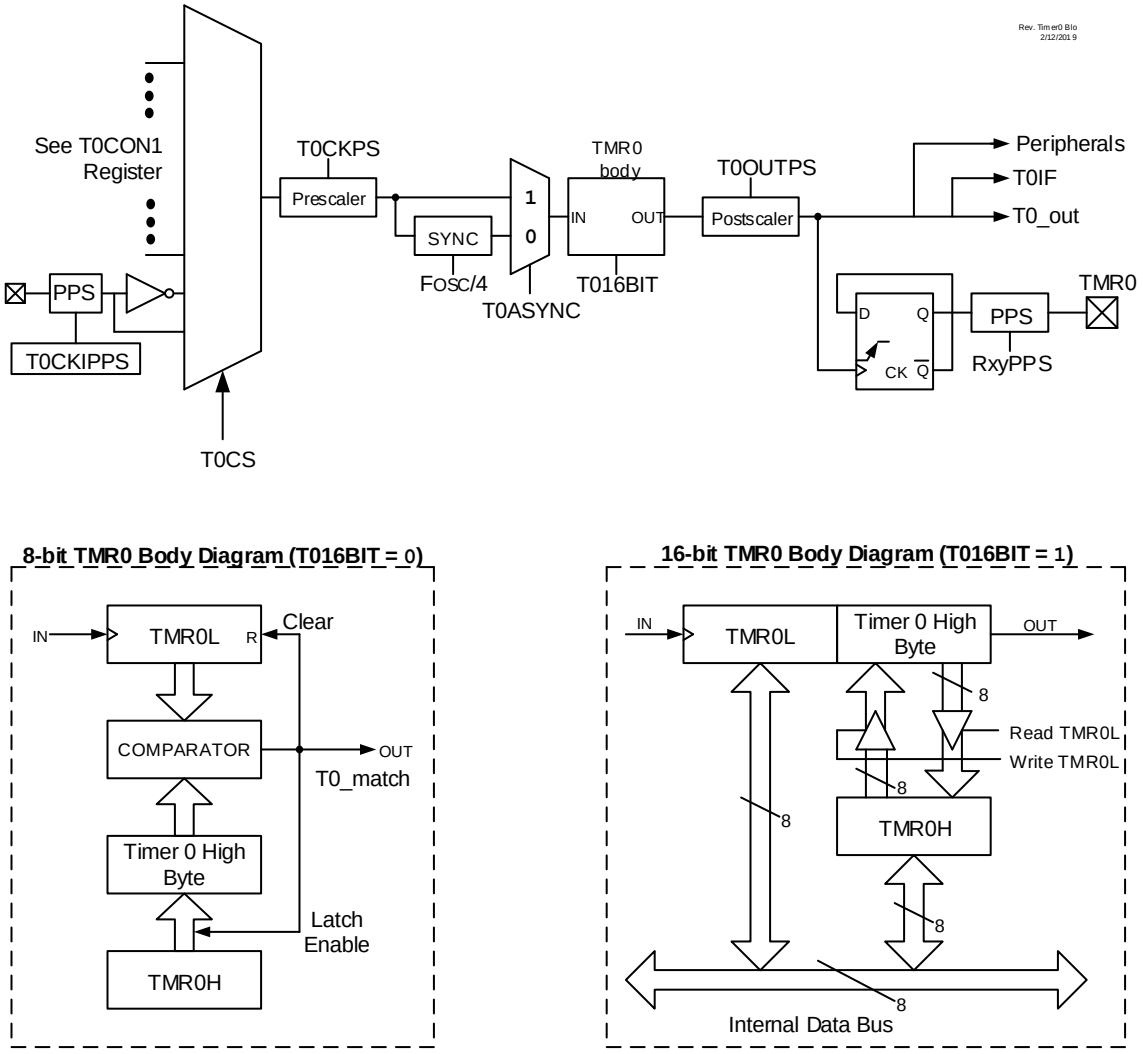

19.1 Timer0 Operation

Timer0 can operate as either an 8-bit or 16-bit timer. The mode is selected with the MD16 bit.

19.1.1 8-Bit Mode

In this mode, Timer0 increments on the rising edge of the selected clock source. A prescaler on the clock input gives several prescale options (see the prescaler control bits, CKPS). In this mode, as shown in Figure 19-1, a buffered version of TMR0H is maintained.

This is compared with the value of TMR0L on each cycle of the selected clock source. When the two values match, the following events occur:

- TMR0L is reset
- The contents of TMR0H are copied to the TMR0H buffer for next comparison

19.1.2 16-Bit Mode

In this mode, Timer0 increments on the rising edge of the selected clock source. A prescaler on the clock input gives several prescale options (see the prescaler control bits, CKPS). In this mode, TMR0H:TMR0L form the 16-bit timer value. As shown in Figure 19-1, reads and writes of the TMR0H register are buffered. The TMR0H register is updated with the contents of the high byte of Timer0 when the TMR0L register is read. Similarly, writing the TMR0L register causes a transfer of the TMR0H register value to the Timer0 high byte.

This buffering allows all 16 bits of Timer0 to be read and written at the same time. Timer0 rolls over to `0x0000` on incrementing past `0xFFFF`. This makes the timer free-running. While actively operating in 16-bit mode, the Timer0 value can be read but not written.

19.2 Clock Selection

Timer0 has several options for clock source selections, the option to operate synchronously/asynchronously and an available programmable prescaler. The CS bits are used to select the clock source for Timer0.

19.2.1 Synchronous Mode

When the ASYNC bit is clear, Timer0 clock is synchronized to the system clock ($F_{OSC}/4$). When operating in Synchronous mode, Timer0 clock frequency cannot exceed $F_{OSC}/4$. During Sleep mode, the system clock is not available and Timer0 cannot operate.

19.2.2 Asynchronous Mode

When the ASYNC bit is set, Timer0 increments with each rising edge of the input source (or output of the prescaler, if used). Asynchronous mode allows Timer0 to continue operation during Sleep mode provided the selected clock source operates during Sleep.

19.2.3 Programmable Prescaler

Timer0 has 16 programmable input prescaler options ranging from 1:1 to 1:32768. The prescaler values are selected using the CKPS bits. The prescaler counter is not directly readable or writable. The prescaler counter is cleared on the following events:

- A write to the TMR0L register
- A write to either the T0CON0 or T0CON1 registers
- Any device Reset

19.2.4 Programmable Postscaler

Timer0 has 16 programmable output postscaler options ranging from 1:1 to 1:16. The postscaler values are selected using the OUTPS bits. The postscaler divides the output of Timer0 by the selected ratio. The postscaler counter is not directly readable or writable. The postscaler counter is cleared on the following events:

- A write to the TMR0L register
- A write to either the T0CON0 or T0CON1 registers
- Any device Reset

19.3 Timer0 Output and Interrupt

19.3.1 Timer0 Output

TMR0_out toggles on every match between TMR0L and TMR0H in 8-bit mode, or when TMR0H:TMR0L rolls over in 16-bit mode. If the output postscaler is used, the output is scaled by the ratio selected. The Timer0 output can be routed to an I/O pin via the RxyPPS output selection register, or internally to a number of Core Independent Peripherals. The Timer0 output can be monitored through software via the OUT output bit.

19.3.2 Timer0 Interrupt

The Timer0 Interrupt Flag (TMR0IF) bit is set when the TMR0_out toggles. If the Timer0 interrupt is enabled (TMR0IE), the CPU will be interrupted when the TMR0IF bit is set. When the postscaler bits (T0OUTPS) are set to 1:1 operation (no division), the T0IF flag bit will be set with every TMR0 match or rollover. In general, the TMR0IF flag bit will be set every T0OUTPS +1 matches or rollovers.

19.3.3 Timer0 Example

Timer0 Configuration:

- Timer0 mode = 16-bit
- Clock Source = $F_{OSC}/4$ (250 kHz)
- Synchronous operation
- Prescaler = 1:1
- Postscaler = 1:2 (T0OUTPS = `1`)

In this case, the TMR0_out toggles every two rollovers of TMR0H:TMR0L.
i.e., (0xFFFF)*2*(1/250 kHz) = 524.28 ms

19.4 Operation During Sleep

When operating synchronously, Timer0 will halt when the device enters Sleep mode. When operating asynchronously and the selected clock source is active, Timer0 will continue to increment and wake the device from Sleep mode if the Timer0 interrupt is enabled.

19.5 Register Definitions: Timer0 Control

19.5.1 T0CON0

Name: T0CON0
Offset: 0x059E

Timer0 Control Register 0

Bit	7	6	5	4	3	2	1	0
	EN		OUT	MD16	OUTPS[3:0]			
Access	R/W		R	R/W	R/W	R/W	R/W	R/W
Reset	0		0	0	0	0	0	0

Bit 7 – EN TMR0 Enable

Value	Description
1	The module is enabled and operating
0	The module is disabled

Bit 5 – OUT TMR0 Output

Bit 4 – MD16 16-Bit Timer Operation Select

Value	Description
1	TMR0 is a 16-bit timer
0	TMR0 is an 8-bit timer

Bits 3:0 – OUTPS[3:0] TMR0 Output Postscaler (Divider) Select

Value	Description
1111	1:16 Postscaler
1110	1:15 Postscaler
1101	1:14 Postscaler
1100	1:13 Postscaler
1011	1:12 Postscaler
1010	1:11 Postscaler
1001	1:10 Postscaler
1000	1:9 Postscaler
0111	1:8 Postscaler
0110	1:7 Postscaler
0101	1:6 Postscaler
0100	1:5 Postscaler
0011	1:4 Postscaler
0010	1:3 Postscaler
0001	1:2 Postscaler
0000	1:1 Postscaler

© 2020-2022 Microchip Technology Inc.
and its subsidiaries

19.5.2 T0CON1

Name: T0CON1
Offset: 0x059F

Timer0 Control Register 1

Bit	7	6	5	4	3	2	1	0
	CS[2:0]			ASYNC	CKPS[3:0]			
Access	R/W	R/W	R/W	R/W	R/W	R/W	R/W	R/W
Reset	0	0	0	0	0	0	0	0

Bits 7:5 – CS[2:0] Timer0 Clock Source Select

Table 19-1. Timer0 Clock Source Selections

T0CS	Clock Source
111-110	Reserved
101	MFINTOSC (500 kHz)
100	LFINTOSC
011	HFINTOSC
010	$F_{OSC}/4$
001	Pin selected by T0CKIPPS (Inverted)
000	Pin selected by T0CKIPPS (Noninverted)

Bit 4 – ASYNC TMR0 Input Asynchronization Enable

Value	Description
1	The input to the TMR0 counter is not synchronized to system clocks
0	The input to the TMR0 counter is synchronized to Fosc/4

Bits 3:0 – CKPS[3:0] Prescaler Rate Select

Value	Description
1111	1:32768
1110	1:16384
1101	1:8192
1100	1:4096
1011	1:2048
1010	1:1024
1001	1:512
1000	1:256
0111	1:128
0110	1:64
0101	1:32
0100	1:16
0011	1:8
0010	1:4
0001	1:2
0000	1:1

© 2020-2022 Microchip Technology Inc.
and its subsidiaries

19.5.3 TMR0H

Name: TMR0H
Offset: 0x059D

Timer0 Period/Count High Register

Bit	7	6	5	4	3	2	1	0
	TMR0H[7:0]							
Access	R/W	R/W	R/W	R/W	R/W	R/W	R/W	R/W
Reset	1	1	1	1	1	1	1	1

Bits 7:0 – TMR0H[7:0] TMR0 Most Significant Counter

Value	Condition	Description
0 to 255	MD16 = 0	8-bit Timer0 Period Value. TMR0L continues counting from 0 when this value is reached.
0 to 255	MD16 = 1	16-bit Timer0 Most Significant Byte

19.5.4 TMR0L

Name: TMR0L
Offset: 0x059C

Timer0 Period/Count Low Register

Bit	7	6	5	4	3	2	1	0
	TMR0L[7:0]							
Access	R/W	R/W	R/W	R/W	R/W	R/W	R/W	R/W
Reset	0	0	0	0	0	0	0	0

Bits 7:0 – TMR0L[7:0] TMR0 Least Significant Counter

Value	Condition	Description
0 to 255	MD16 = 0	8-bit Timer0 Counter bits
0 to 255	MD16 = 1	16-bit Timer0 Least Significant Byte

19.6 Register Summary - Timer0

Offset	Name	Bit Pos.	7	6	5	4	3	2	1	0
0x00 ... 0x059B	Reserved									
0x059C	TMR0L	7:0	TMR0L[7:0]							
0x059D	TMR0H	7:0	TMR0H[7:0]							
0x059E	T0CON0	7:0	EN		OUT	MD16	OUTPS[3:0]			
0x059F	T0CON1	7:0	CS[2:0]			ASYNC	CKPS[3:0]			

20. TMR1 - Timer1 Module with Gate Control

The Timer1 module is a 16-bit timer/counter with the following features:

- 16-bit timer/counter register pair (TMRxH:TMRxL)
- Programmable internal or external clock source
- 2-bit prescaler
- Clock source for optional comparator synchronization
- Multiple Timer1 gate (count enable) sources
- Interrupt-on-overflow
- Wake-up on overflow (external clock, Asynchronous mode only)
- 16-bit read/write operation
- Time base for the capture/compare function with the CCP modules
- Special event trigger (with CCP)
- Selectable gate source polarity
- Gate Toggle mode
- Gate Single Pulse mode
- Gate value status
- Gate event interrupt

Important: References to the module Timer1 apply to all the odd numbered timers on this device.

Figure 20-1. Timer1 Block Diagram

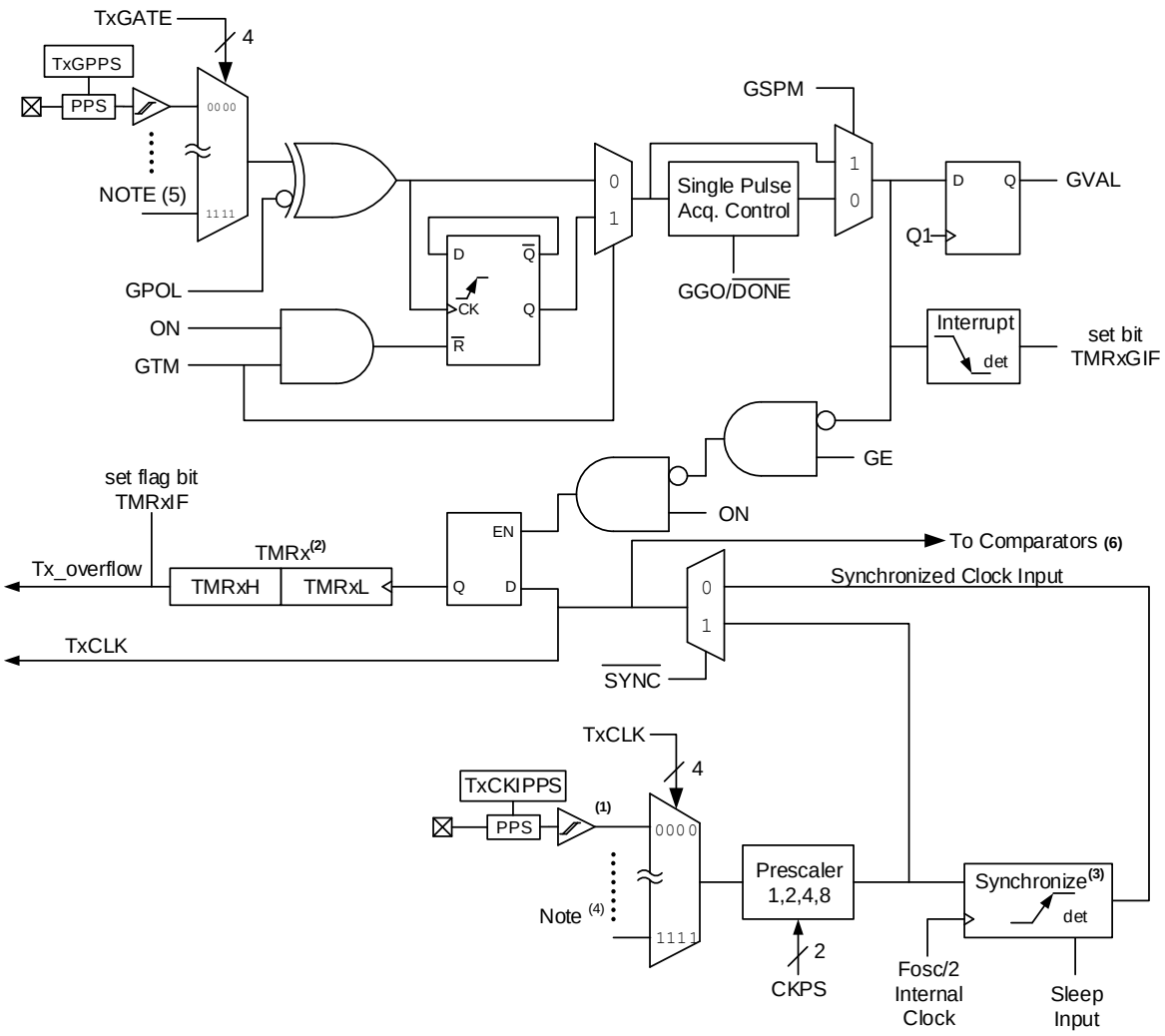

Notes:

1. This signal comes from the pin selected by Timer1 PPS register.
2. TMRx register increments on rising edge.
3. Synchronize does not operate while in Sleep.
4. See TxCLK for clock source selections.
5. See TxGATE for gate source selections.
6. Synchronized comparator output must not be used in conjunction with synchronized input clock.

20.1 Timer1 Operation

The Timer1 module is a 16-bit incrementing counter accessed through the TMRx register. Writes to TMRx directly update the counter. When used with an internal clock source, the module is a timer that increments on every instruction cycle. When used with an external clock source, the module can be used as either a timer or counter and increments on every selected edge of the external source.

Timer1 is enabled by configuring the ON and GE bits. Table 20-1 shows the possible Timer1 enable selections.

Table 20-1. Timer1 Enable Selections

ON	GE	Timer1 Operation
1	1	Count enabled
1	0	Always on
0	1	Off
0	0	Off

20.2 Clock Source Selection

The CS bits select the clock source for Timer1. These bits allow the selection of several possible synchronous and asynchronous clock sources.

20.2.1 Internal Clock Source

When the internal clock source is selected, the TMRx register will increment on multiples of F_{OSC} as determined by the Timer1 prescaler.

When the F_{OSC} internal clock source is selected, the TMRx register value will increment by four counts every instruction clock cycle. Due to this condition, a two LSB error in resolution will occur when reading the TMRx value. To utilize the full resolution of Timer1, an asynchronous input signal must be used to gate the Timer1 clock input.

Important: In Counter mode, a falling edge must be registered by the counter prior to the first incrementing rising edge after any one or more of the following conditions:

- Timer1 enabled after POR
- Write to TMRxH or TMRxL
- Timer1 is disabled
- Timer1 is disabled (ON = 0) when TxCKI is high, then Timer1 is enabled (ON = 1) when TxCKI is low. Refer to the figure below.

Figure 20-2. Timer1 Incrementing Edge

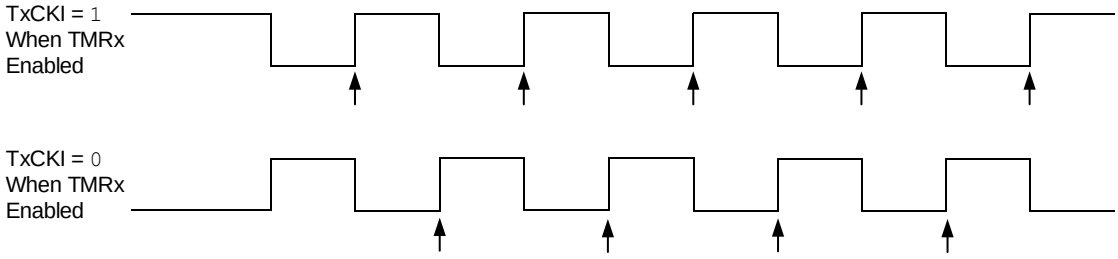

Notes:

1. Arrows indicate counter increments.
2. In Counter mode, a falling edge must be registered by the counter prior to the first incrementing rising edge of the clock.

20.2.2 External Clock Source

When the external clock source is selected, the TMRx module may work as a timer or a counter. When enabled to count, Timer1 is incremented on the rising edge of the external clock input of the TxCKIPPS pin. This external clock source can be synchronized to the system clock or it can run asynchronously.

20.3 Timer1 Prescaler

Timer1 has four prescaler options allowing 1, 2, 4 or 8 divisions of the clock input. The CKPS bits control the prescale counter. The prescale counter is not directly readable or writable; however, the prescaler counter is cleared upon a write to TMRx.

20.4 Timer1 Operation in Asynchronous Counter Mode

When the SYNC Control bit is set, the external clock input is not synchronized. The timer increments asynchronously to the internal phase clocks. If the external clock source is selected, then the timer will continue to run during Sleep and can generate an interrupt on overflow, which will wake up the processor. However, special precautions in software are needed to read/write the timer.

Important: When switching from synchronous to asynchronous operation, it is possible to skip an increment. When switching from asynchronous to synchronous operation, it is possible to produce an additional increment.

20.4.1 Reading and Writing TMRx in Asynchronous Counter Mode

Reading TMRxH or TMRxL while the timer is running from an external asynchronous clock will ensure a valid read (taken care of in hardware). However, the user must keep in mind that reading the 16-bit timer in two 8-bit values itself poses certain problems, since there may be a carry-out of TMRxL to TMRxH between the reads.

For writes, it is recommended that the user simply stop the timer and write the desired values. A write contention may occur by writing to the timer registers, while the register is incrementing. This may produce an unpredictable value in the TMRxH:TMRxL register pair.

20.5 Timer1 16-Bit Read/Write Mode

Timer1 can be configured to read and write all 16 bits of data to and from the 8-bit TMRxL and TMRxH registers, simultaneously. The 16-bit read and write operations are enabled by setting the RD16 bit. To accomplish this function, the TMRxH register value is mapped to a buffer register called the TMRxH buffer register. While in 16-bit mode, the TMRxH register is not directly readable or writable and all read and write operations take place through the use of this TMRxH buffer register.

When a read from the TMRxL register is requested, the value of the TMRxH register is simultaneously loaded into the TMRxH buffer register. When a read from the TMRxH register is requested, the value is provided from the TMRxH buffer register instead. This provides the user with the ability to accurately read all 16 bits of the Timer1 value from a single instance in time (refer to Figure 20-3 for more details). In contrast, when not in 16-bit mode, the user must read each register separately and determine if the values have become invalid due to a rollover that may have occurred between the read operations.

When a write request of the TMRxL register is requested, the TMRxH buffer register is simultaneously updated with the contents of the TMRxH register. The value of TMRxH must be preloaded into the TMRxH buffer register prior to the write request for the TMRxL register. This provides the user with the ability to write all 16 bits to the TMRx register at the same time. Any requests to write to TMRxH directly does not clear the Timer1 prescaler value. The prescaler value is only cleared through write requests to the TMRxL register.

© 2020-2022 Microchip Technology Inc.
and its subsidiaries

Figure 20-3. Timer1 16-Bit Read/Write Mode Block Diagram

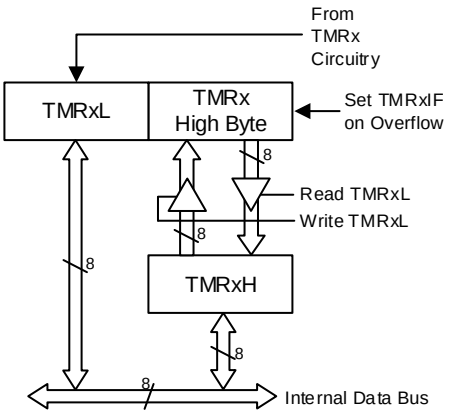

20.6 Timer1 Gate

Timer1 can be configured to count freely or the count can be enabled and disabled using Timer1 gate circuitry. This is also referred to as Timer1 gate enable. Timer1 gate can also be driven by multiple selectable sources.

20.6.1 Timer1 Gate Enable

The Timer1 Gate Enable mode is enabled by setting the GE bit. The polarity of the Timer1 Gate Enable mode is configured using the GPOL bit.

When Timer1 Gate Enable mode is enabled, Timer1 will increment on the rising edge of the Timer1 clock source. When Timer1 Gate signal is inactive, the timer will not increment and hold the current count. Enable mode is disabled, no incrementing will occur and Timer1 will hold the current count. See Figure 20-4 for timing details.

Table 20-2. Timer1 Gate Enable Selections

TMRxCLK	GPOL	TxG	Timer1 Operation
↑	1	1	Counts
↑	1	0	Holds Count
↑	0	1	Holds Count
↑	0	0	Counts

Figure 20-4. Timer1 Gate Enable Mode

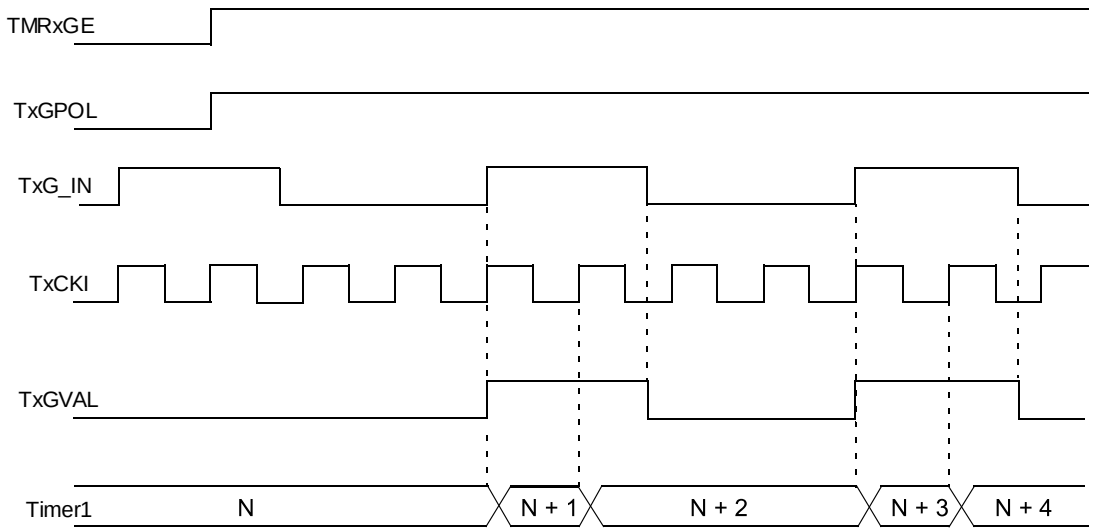

20.6.2 Timer1 Gate Source Selection

The gate source for Timer1 is selected using the GSS bits. The polarity selection for the gate source is controlled by the GPOL bit.

20.6.3 Timer1 Gate Toggle Mode

When Timer1 Gate Toggle mode is enabled, it is possible to measure the full-cycle length of a Timer1 Gate signal, as opposed to the duration of a single-level pulse. The Timer1 gate source is routed through a flip-flop that changes state on every incrementing edge of the signal. See the figure below for timing details.

Timer1 Gate Toggle mode is enabled by setting the GTM bit. When the GTM bit is cleared, the flip-flop is cleared and held clear. This is necessary to control which edge is measured.

Important: Enabling Toggle mode at the same time as changing the gate polarity may result in indeterminate operation.

Figure 20-5. Timer1 Gate Toggle Mode

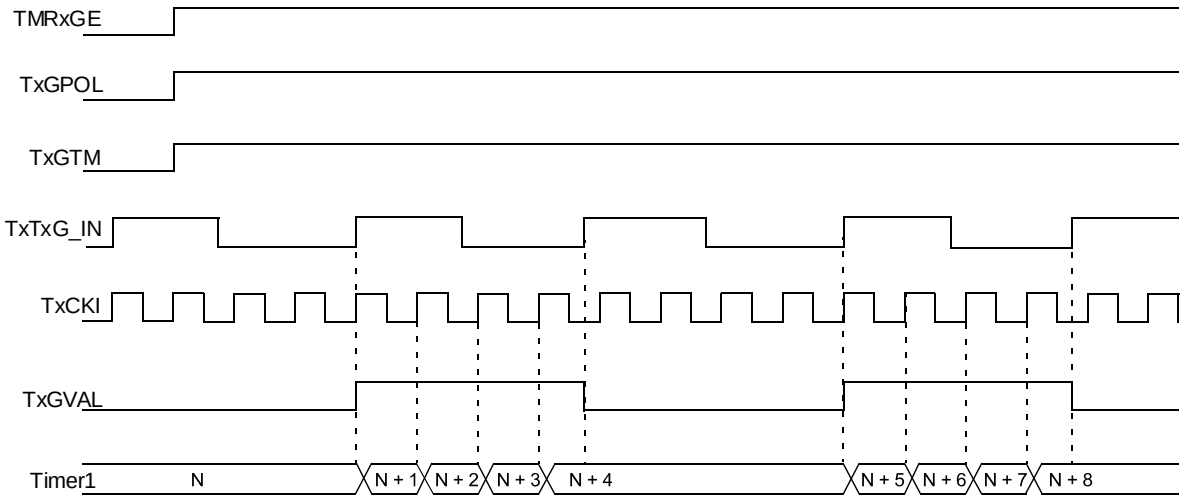

20.6.4 Timer1 Gate Single Pulse Mode

When Timer1 Gate Single Pulse mode is enabled, it is possible to capture a single pulse gate event. Timer1 Gate Single Pulse mode is first enabled by setting the GSPM bit. Next, the GGO/DONE must be set. The Timer1 will be fully enabled on the next incrementing edge. On the next trailing edge of the pulse, the GGO/$\overline{\text{DONE}}$ bit will automatically be cleared. No other gate events will be allowed to increment Timer1 until the GGO/$\overline{\text{DONE}}$ bit is once again set in software.

Figure 20-6. Timer1 Gate Single Pulse Mode

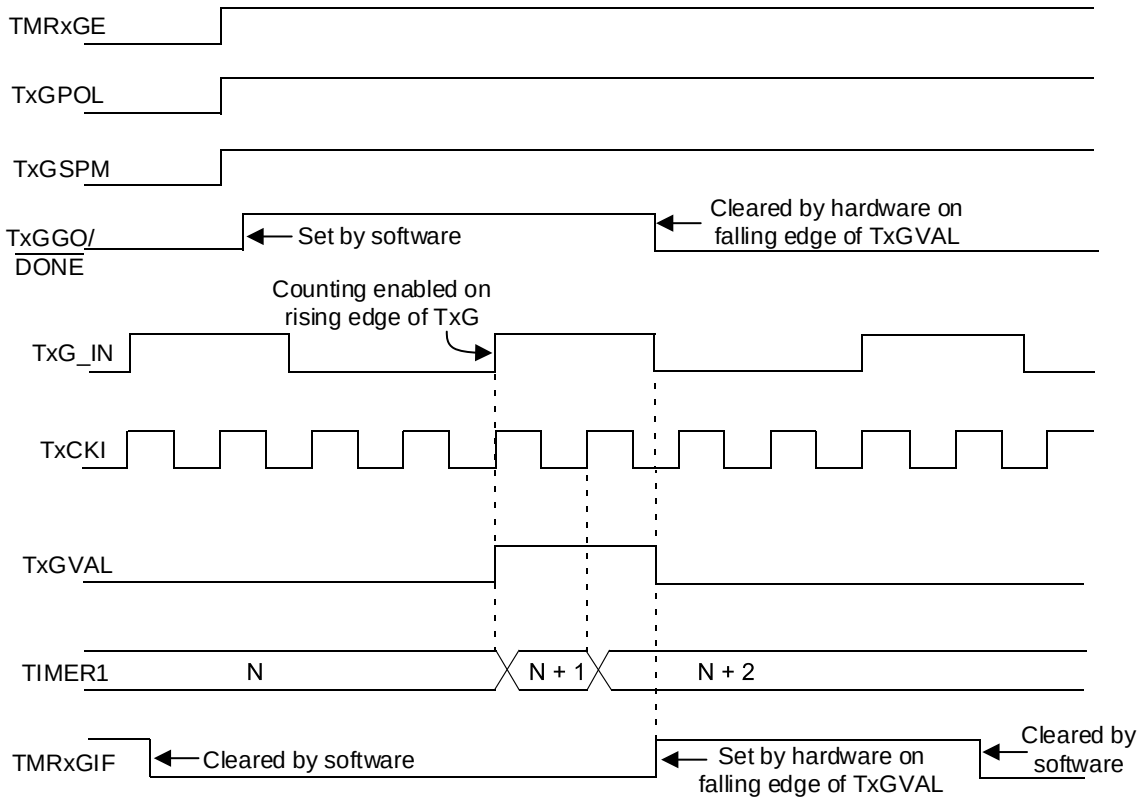

Clearing the GSPM bit will also clear the GGO/$\overline{\text{DONE}}$ bit. See the figure below for timing details. Enabling the Toggle mode and the Single Pulse mode simultaneously will permit both sections to work together. This allows the cycle times on the Timer1 gate source to be measured. See the figure below for timing details.

Figure 20-7. Timer1 Gate Single Pulse and Toggle Combined Mode

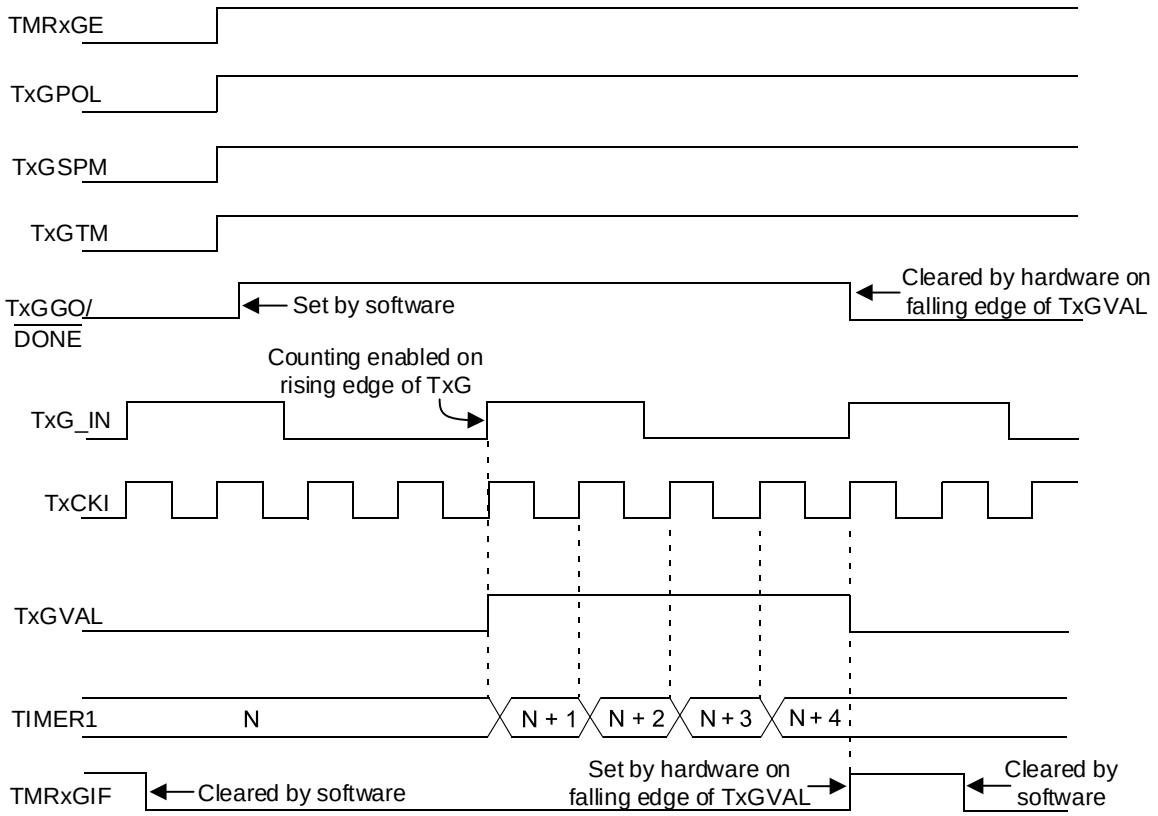

20.6.5 Timer1 Gate Value Status

When Timer1 gate value status is utilized, it is possible to read the most current level of the gate control value. The value is stored in the GVAL bit in the TxGCON register. The GVAL bit is valid even when the Timer1 gate is not enabled (GE bit is cleared).

20.6.6 Timer1 Gate Event Interrupt

When Timer1 gate event interrupt is enabled, it is possible to generate an interrupt upon the completion of a gate event. When the falling edge of GVAL occurs, the TMRxGIF flag bit will be set. If the TMRxGIE bit in the corresponding PIE register is set, then an interrupt will be recognized.

The TMRxGIF flag bit operates even when the Timer1 gate is not enabled (GE bit is cleared).

20.7 Timer1 Interrupt

The TMRx register increments to FFFFh and rolls over to 0000h. When TMRx rolls over, the TMRx Interrupt Flag (TMRxIF) bit of the PIRx register is set. To enable the interrupt-on-rollover, the following bits must be set:

- ON bit of the TxCON register
- TMRxIE bits of the PIEx register
- Global interrupts must be enabled

The interrupt is cleared by clearing the TMRxIF bit as a task in the Interrupt Service Routine.

Important: The TMRx register and the TMRxIF bit need to be cleared before enabling interrupts.

20.8 Timer1 Operation During Sleep

Timer1 can only operate during Sleep when configured as an asynchronous counter. In this mode, many clock sources can be used to increment the counter. To set up the timer to wake the device:

- The ON bit must be set
- The TMRxIE bit of the PIEx register must be set
- Global interrupts must be enabled
- The SYNC bit must be set
- Configure the TxCLK register for using any clock source other than F_{OSC} and $F_{OSC}/4$

The device will wake up on an overflow and execute the next instruction. If global interrupts are enabled, the device will call the IRS. The secondary oscillator will continue to operate in Sleep regardless of the SYNC bit setting.

20.9 CCP Capture/Compare Time Base

The CCP modules use TMRx as the time base when operating in Capture or Compare mode. In Capture mode, the value in TMRx is copied into the CCPRx register on a capture event. In Compare mode, an event is triggered when the value in the CCPRx register matches the value in TMRx. This event can be a Special Event Trigger.

20.10 CCP Special Event Trigger

When any of the CCPs are configured to trigger a special event, the trigger will clear the TMRx register. This special event does not cause a Timer1 interrupt. The CCP module may still be configured to generate a CCP interrupt. In this mode of operation, the CCPRx register becomes the period register for Timer1. Timer1 must be synchronized and $F_{OSC}/4$ must be selected as the clock source to utilize the Special Event Trigger. Asynchronous operation of Timer1 can cause a Special Event Trigger to be missed. In the event that a write to TMRxH or TMRxL coincides with a Special Event Trigger from the CCP, the write will take precedence.

20.11 Register Definitions: Timer1 Control

Long bit name prefixes for the Timer registers are shown in the table below, where ‘x’ refers to the Timer instance number. Refer to the “**Long Bit Names**” section in the “**Register and Bit Naming Conventions**” chapter for more information.

Table 20-3. Timer1 Register Bit Name Prefixes

Peripheral	Bit Name Prefix
Timer1	T1

20.11.1 TxCON

Name: TxCON
Offset: 0x020E

Timer Control Register

Bit	7	6	5	4	3	2	1	0
			CKPS[1:0]			$\overline{\text{SYNC}}$	RD16	ON
Access			R/W	R/W		R/W	R/W	R/W
Reset			0	0		0	0	0

Bits 5:4 – CKPS[1:0] Timer Input Clock Prescaler Select
Reset States: POR/BOR = 00
All Other Resets = uu

Value	Description
11	1:8 Prescaler value
10	1:4 Prescaler value
01	1:2 Prescaler value
00	1:1 Prescaler value

Bit 2 – $\overline{\text{SYNC}}$ Timer External Clock Input Synchronization Control
Reset States: POR/BOR = 0
All Other Resets = u

Value	Condition	Description
x	CS = $F_{OSC}/4$ or F_{OSC}	This bit is ignored. Timer uses the incoming clock as is.
1	All other clock sources	Do not synchronize external clock input
0	All other clock sources	Synchronize external clock input with system clock

Bit 1 – RD16 16-Bit Read/Write Mode Enable
Reset States: POR/BOR = 0
All Other Resets = u

Value	Description
1	Enables register read/write of Timer in one 16-bit operation
0	Enables register read/write of Timer in two 8-bit operations

Bit 0 – ON Timer On
Reset States: POR/BOR = 0
All Other Resets = u

Value	Description
1	Enables Timer
0	Disables Timer

20.11.2 TxGCON

Name: TxGCON
Offset: 0x020F

Timer Gate Control Register

Bit	7	6	5	4	3	2	1	0
	GE	GPOL	GTM	GSPM	GGO/$\overline{\text{DONE}}$	GVAL		
Access	R/W	R/W	R/W	R/W	R/W	R		
Reset	0	0	0	0	0	x		

Bit 7 – GE Timer Gate Enable
Reset States: POR/BOR = 0
All Other Resets = u

Value	Condition	Description
1	ON = 1	Timer counting is controlled by the Timer gate function
0	ON = 1	Timer is always counting
X	ON = 0	This bit is ignored

Bit 6 – GPOL Timer Gate Polarity
Reset States: POR/BOR = 0
All Other Resets = u

Value	Description
1	Timer gate is active-high (Timer counts when gate is high)
0	Timer gate is active-low (Timer counts when gate is low)

Bit 5 – GTM Timer Gate Toggle Mode
Timer Gate flip-flop toggles on every rising edge when Toggle mode is enabled.
Reset States: POR/BOR = 0
All Other Resets = u

Value	Description
1	Timer Gate Toggle mode is enabled
0	Timer Gate Toggle mode is disabled and Toggle flip-flop is cleared

Bit 4 – GSPM Timer Gate Single Pulse Mode
Reset States: POR/BOR = 0
All Other Resets = u

Value	Description
1	Timer Gate Single Pulse mode is enabled and is controlling Timer gate
0	Timer Gate Single Pulse mode is disabled

Bit 3 – GGO/$\overline{\text{DONE}}$ Timer Gate Single Pulse Acquisition Status
This bit is automatically cleared when TxGSPM is cleared.
Reset States: POR/BOR = 0
All Other Resets = u

Value	Description
1	Timer Gate Single Pulse Acquisition is ready, waiting for an edge
0	Timer Gate Single Pulse Acquisition has completed or has not been started

Bit 2 – GVAL Timer Gate Current State
Indicates the current state of the timer gate that can be provided to TMRxH:TMRxL
Unaffected by the Timer Gate Enable (GE) bit

20.11.3 TxCLK

Name: TxCLK
Offset: 0x0211

Timer Clock Source Selection Register

Bit	7	6	5	4	3	2	1	0
				CS[4:0]				
Access				R/W	R/W	R/W	R/W	R/W
Reset				0	0	0	0	0

Bits 4:0 – CS[4:0] Timer Clock Source Selection

Table 20-4. Timer Clock Sources

CS	Clock Source
11111-01001	Reserved
01000	TMR0_OUT
00111	MFINTOSC (32 kHz)
00110	MFINTOSC (500 kHz)
00101	SFINTOSC (1 MHz)
00100	LFINTOSC
00011	HFINTOSC
00010	F_{OSC}
00001	$F_{OSC}/4$
00000	Pin selected by T1CKIPPS

Reset States: POR/BOR = 00000
All Other Resets = uuuuu

20.11.4 TxGATE

Name: TxGATE
Offset: 0x0210

Timer Gate Source Selection Register

Bit	7	6	5	4	3	2	1	0
				GSS[4:0]				
Access				R/W	R/W	R/W	R/W	R/W
Reset				0	0	0	0	0

Bits 4:0 – GSS[4:0] Timer Gate Source Selection

Table 20-5. Timer Gate Sources

GSS	Gate Source
11111-00111	Reserved
00110	PWM4_OUT
00101	PWM3_OUT
00100	CCP2_OUT
00011	CCP1_OUT
00010	TMR2_Postscaled_OUT
00001	TMR0_OUT
00000	Pin selected by T1GPPS

20.11.5 TMRx

Name: TMRx
Offset: 0x020C

Timer Register

Bit	15	14	13	12	11	10	9	8
	TMRx[15:8]							
Access	R/W	R/W	R/W	R/W	R/W	R/W	R/W	R/W
Reset	0	0	0	0	0	0	0	0

Bit	7	6	5	4	3	2	1	0
	TMRx[7:0]							
Access	R/W	R/W	R/W	R/W	R/W	R/W	R/W	R/W
Reset	0	0	0	0	0	0	0	0

Bits 15:0 – TMRx[15:0] Timer Register Value
Reset States: POR/BOR = 0000000000000000
All Other Resets = uuuuuuuuuuuuuuuu

Notes: The individual bytes in this multibyte register can be accessed with the following register names:

- TMRxH: Accesses the high byte TMRx[15:8]
- TMRxL: Accesses the low byte TMRx[7:0]

20.12 Register Summary - Timer1

Offset	Name	Bit Pos.	7	6	5	4	3	2	1	0
0x00 ... 0x020B	Reserved									
0x020C	TMR1	7:0	TMR1[7:0]							
		15:8	TMR1[15:8]							
0x020E	T1CON	7:0			CKPS[1:0]			$\overline{\text{SYNC}}$	RD16	ON
0x020F	T1GCON	7:0	GE	GPOL	GTM	GSPM	GGO/$\overline{\text{DONE}}$	GVAL		
0x0210	T1GATE	7:0				GSS[4:0]				
0x0211	T1CLK	7:0				CS[4:0]				

21. TMR2 - Timer2 Module

The Timer2 module is an 8-bit timer that incorporates the following features:

- 8-bit timer and period registers
- Readable and writable
- Software programmable prescaler (1:1 to 1:128)
- Software programmable postscaler (1:1 to 1:16)
- Interrupt on T2TMR match with T2PR
- One-shot operation
- Full asynchronous operation
- Includes Hardware Limit Timer (HLT)
- Alternate clock sources
- External timer Reset signal sources
- Configurable timer Reset operation

See figure below for a block diagram of Timer2.

Important: References to module Timer2 apply to all the even numbered timers on this device (Timer2, Timer4, etc.).

Figure 21-1. Timer2 with Hardware Limit Timer (HLT) Block Diagram

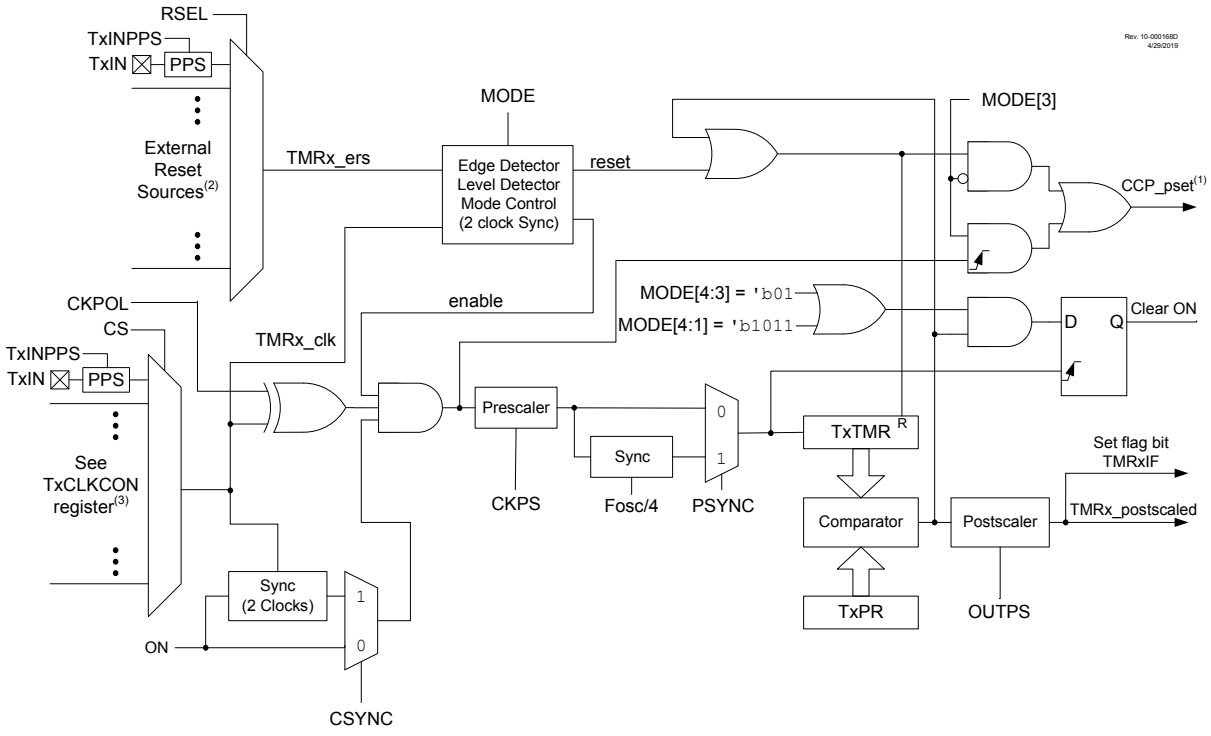

Notes:

1. Signal to the CCP peripheral for PWM pulse trigger in PWM mode.
2. See RSEL for external Reset sources.
3. See CS for clock source selections.

21.1 Timer2 Operation

Timer2 operates in three major modes:

- Free-Running Period
- One Shot
- Monostable

Within each operating mode, there are several options for starting, stopping and Reset. Table 21-1 lists the options.

In all modes, the T2TMR count register increments on the rising edge of the clock signal from the programmable prescaler. When T2TMR equals T2PR, a high level output to the postscaler counter is generated. T2TMR is cleared on the next clock input.

An external signal from hardware can also be configured to gate the timer operation or force a T2TMR count Reset. In Gate modes, the counter stops when the gate is disabled and resumes when the gate is enabled. In Reset modes, the T2TMR count is reset on either the level or edge from the external source.

The T2TMR and T2PR registers are both directly readable and writable. The T2TMR register is cleared and the T2PR register initializes to `0xFF` on any device Reset. Both the prescaler and postscaler counters are cleared on the following events:

- A write to the T2TMR register
- A write to the T2CON register
- Any device Reset
- External Reset source event that resets the timer

Important: T2TMR is not cleared when T2CON is written.

21.1.1 Free-Running Period Mode

The value of T2TMR is compared to that of the period register, T2PR, on each clock cycle. When the two values match, the comparator resets the value of T2TMR to `0x00` on the next cycle and increments the output postscaler counter. When the postscaler count equals the value in the OUTPS bits of the T2CON register then a one clock period wide pulse occurs on the TMR2_postscaled output, and the postscaler count is cleared.

21.1.2 One Shot Mode

The One Shot mode is identical to the Free-Running Period mode except that the ON bit is cleared and the timer is stopped when T2TMR matches T2PR and will not restart until the ON bit is cycled off and on. Postscaler (OUTPS) values other than zero are ignored in this mode because the timer is stopped at the first period event and the postscaler is reset when the timer is restarted.

21.1.3 Monostable Mode

Monostable modes are similar to One Shot modes except that the ON bit is not cleared and the timer can be restarted by an external Reset event.

21.2 Timer2 Output

The Timer2 module's primary output is TMR2_postscaled, which pulses for a single TMR2_clk period upon each match of the postscaler counter and the OUTPS bits of the T2CON register. The postscaler is incremented each time the T2TMR value matches the T2PR value. This signal can also be selected as an input to other Core Independent Peripherals.

In addition, the Timer2 is also used by the CCP module for pulse generation in PWM mode. See the "**PWM Overview**" and "**PWM Period**" sections in the **"CCP - Capture/Compare/PWM Module"** chapter for more details on setting up Timer2 for use with the CCP and PWM modules.

21.3 External Reset Sources

In addition to the clock source, the Timer2 can also be driven by an external Reset source input. This external Reset input is selected for each timer with the corresponding TxRST register. The external Reset input can control starting and stopping of the timer, as well as resetting the timer, depending on the mode used.

21.4 Timer2 Interrupt

Timer2 can also generate a device interrupt. The interrupt is generated when the postscaler counter matches the selected postscaler value (OUTPS bits of T2CON register). The interrupt is enabled by setting the TMR2IE interrupt enable bit. Interrupt timing is illustrated in the figure below.

Figure 21-2. Timer2 Prescaler, Postscaler, and Interrupt Timing Diagram

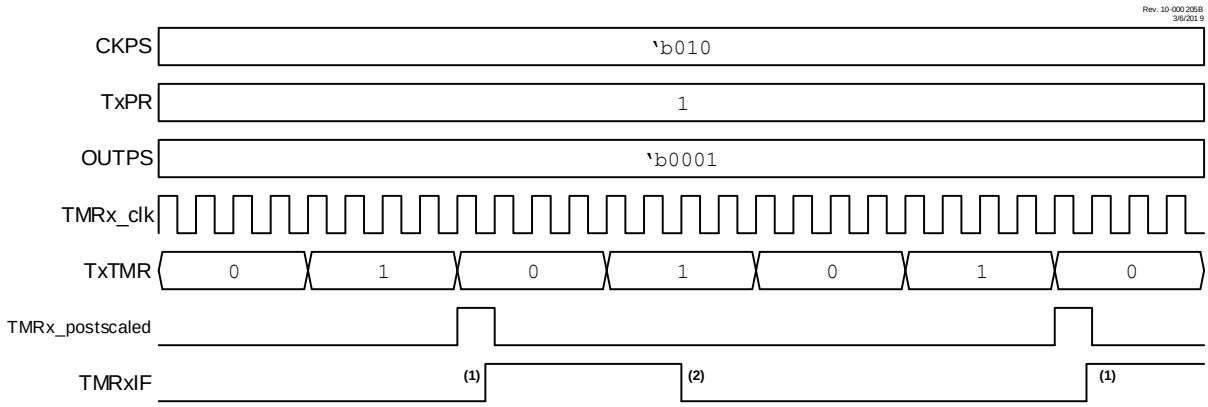

Notes: 1. Setting the interrupt flag is synchronized with the instruction clock. Synchronization may take as many as two instruction cycles.
2. Cleared by software.

21.5 PSYNC Bit

Setting the PSYNC bit synchronizes the prescaler output to $F_{OSC}/4$. Setting this bit is required for reading the Timer2 counter register while the selected Timer clock is asynchronous to $F_{OSC}/4$.

Note: Setting PSYNC requires that the output of the prescaler is slower than $F_{OSC}/4$. Setting PSYNC when the output of the prescaler is greater than or equal to $F_{OSC}/4$ may cause unexpected results.

21.6 CSYNC Bit

All bits in the Timer2 SFRs are synchronized to $F_{OSC}/4$ by default, not the Timer2 input clock. As such, if the Timer2 input clock is not synchronized to $F_{OSC}/4$, it is possible for the Timer2 input clock to transition at the same time as the ON bit is set in software, which may cause undesirable behavior and glitches in the counter. Setting the CSYNC bit remedies this problem by synchronizing the ON bit to the Timer2 input clock instead of $F_{OSC}/4$. However, as this synchronization uses an edge of the TMR2 input clock, up to one input clock cycle will be consumed and not counted by the Timer2 when CSYNC is set. Conversely, clearing the CSYNC bit synchronizes the ON bit to $F_{OSC}/4$, which does not consume any clock edges, but has the previously stated risk of glitches.

21.7 Operating Modes

The mode of the timer is controlled by the MODE bits. Edge Triggered modes require six Timer clock periods between external triggers. Level Triggered modes require the triggering level to be at least three Timer clock periods long. External triggers are ignored while in Debug mode.

Table 21-1. Operating Modes Table

Mode	MODE		Output Operation	Operation	Timer Control		
	[4:3]	[2:0]			Start	Reset	Stop
Free-Running Period	00	000	Period Pulse	Software gate (Figure 21-3)	ON = 1	—	ON = 0
		001		Hardware gate, active-high (Figure 21-4)	ON = 1 and TMRx_ers = 1	—	ON = 0 or TMRx_ers = 0
		010		Hardware gate, active-low	ON = 1 and TMRx_ers = 0	—	ON = 0 or TMRx_ers = 1
		011	Period Pulse with Hardware Reset	Rising or falling edge Reset	ON = 1	TMRx_ers ↕	ON = 0
		100		Rising edge Reset (Figure 21-5)		TMRx_ers ↑	
		101		Falling edge Reset		TMRx_ers ↓	
		110		Low-level Reset		TMRx_ers = 0	ON = 0 or TMRx_ers = 0
		111		High-level Reset (Figure 21-6)		TMRx_ers = 1	ON = 0 or TMRx_ers = 1
One Shot	01	000	One-shot	Software start (Figure 21-7)	ON = 1	—	ON = 0 or Next clock after TxTMR = TxPR (Note 2)
		001	Edge-Triggered Start (Note 1)	Rising edge start (Figure 21-8)	ON = 1 and TMRx_ers ↑	—	
		010		Falling edge start	ON = 1 and TMRx_ers ↓	—	
		011		Any edge start	ON = 1 and TMRx_ers ↕	—	
		100	Edge-Triggered Start and Hardware Reset (Note 1)	Rising edge start and Rising edge Reset (Figure 21-9)	ON = 1 and TMRx_ers ↑	TMRx_ers ↑	
		101		Falling edge start and Falling edge Reset	ON = 1 and TMRx_ers ↓	TMRx_ers ↓	
		110		Rising edge start and Low-level Reset (Figure 21-10)	ON = 1 and TMRx_ers ↑	TMRx_ers = 0	
		111		Falling edge start and High-level Reset	ON = 1 and TMRx_ers ↓	TMRx_ers = 1	

.....continued

Mode	MODE [4:3]	MODE [2:0]	Output Operation	Operation	Timer Control: Start	Timer Control: Reset	Timer Control: Stop
Monostable	10	000	Reserved				
		001	Edge-Triggered Start (Note 1)	Rising edge start (Figure 21-11)	ON = 1 and TMRx_ers ↑	—	ON = 0 or Next clock after TxTMR = TxPR (Note 3)
		010		Falling edge start	ON = 1 and TMRx_ers ↓	—	
		011		Any edge start	ON = 1 and TMRx_ers ↕	—	
Reserved		100	Reserved				
Reserved		101	Reserved				
One Shot		110	Level-Triggered Start and Hardware Reset	High-level start and Low-level Reset (Figure 21-12)	ON = 1 and TMRx_ers = 1	TMRx_ers = 0	ON = 0 or Held in Reset (Note 2)
		111		Low-level start and High-level Reset	ON = 1 and TMRx_ers = 0	TMRx_ers = 1	
Reserved	11	xxx	Reserved				

Notes:

1. If ON = 0, then an edge is required to restart the timer after ON = 1.
2. When T2TMR = T2PR, the next clock clears ON and stops T2TMR at 00h.
3. When T2TMR = T2PR, the next clock stops T2TMR at 00h but does not clear ON.

21.8 Operation Examples

Unless otherwise specified, the following notes apply to the following timing diagrams:

- Both the prescaler and postscaler are set to 1:1 (both the CKPS and OUTPS bits).
- The diagrams illustrate any clock except $F_{OSC}/4$ and show clock-sync delays of at least two full cycles for both ON and TMRx_ers. When using $F_{OSC}/4$, the clock-sync delay is at least one instruction period for TMRx_ers; ON applies in the next instruction period.
- ON and TMRx_ers are somewhat generalized, and clock-sync delays may produce results that are slightly different than illustrated.
- The PWM Duty Cycle and PWM output are illustrated assuming that the timer is used for the PWM function of the CCP module as described in the "**PWM Overview**" section. The signals are not a part of the Timer2 module.

21.8.1 Software Gate Mode

This mode corresponds to legacy Timer2 operation. The timer increments with each clock input when ON = 1, and does not increment when ON = 0. When the TxTMR count equals the TxPR period count, the timer resets on the next clock and continues counting from zero. Operation with the ON bit software controlled is illustrated in Figure 21-3. With TxPR = 5, the counter advances until TxTMR = 5, and goes to zero with the next clock.

Figure 21-3. Software Gate Mode Timing Diagram (MODE = `'b00000`)

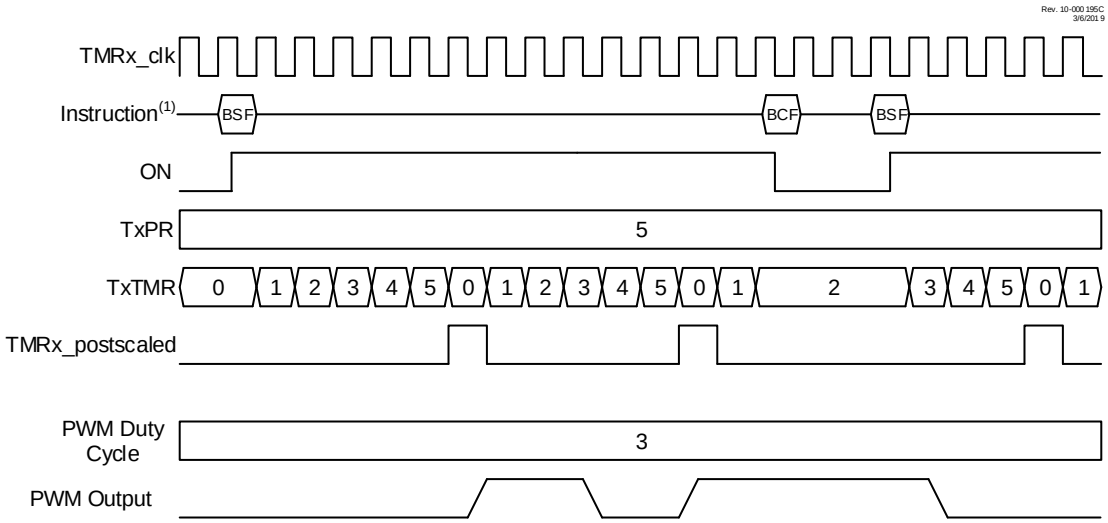

Note: 1. `BSF` and `BCF` represent Bit-Set File and Bit-Clear File instructions executed by the CPU to set or clear the ON bit of TxCON. CPU execution is asynchronous to the timer clock input.

21.8.2 Hardware Gate Mode

The Hardware Gate modes operate the same as the Software Gate mode, except the TMRx_ers external signal can also gate the timer. When used with the CCP, the gating extends the PWM period. If the timer is stopped when the PWM output is high, then the duty cycle is also extended.

When MODE = `'b00001`, then the timer is stopped when the external signal is high. When MODE = `'b00010`, then the timer is stopped when the external signal is low.

Figure 21-4 illustrates the Hardware Gating mode for MODE = `'b00001` in which a high input level starts the counter.

Figure 21-4. Hardware Gate Mode Timing Diagram (MODE = `'b00001`)

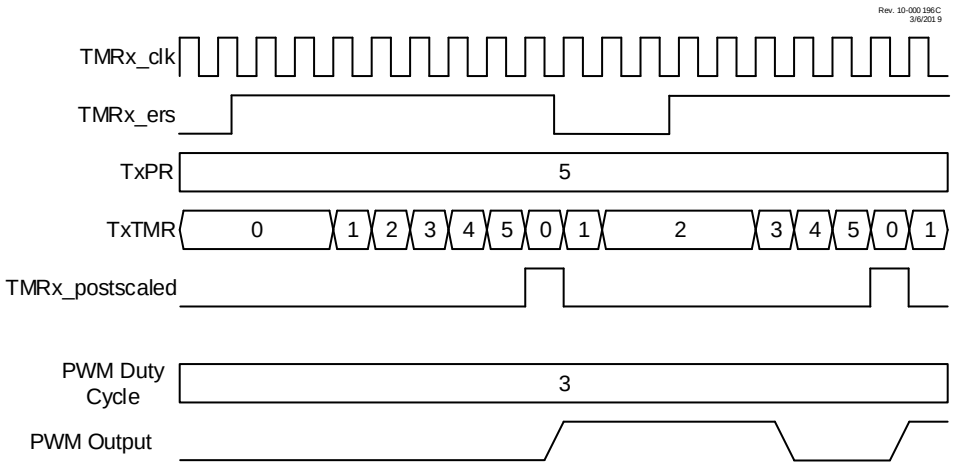

21.8.3 Edge Triggered Hardware Limit Mode

In Hardware Limit mode, the timer can be reset by the TMRx_ers external signal before the timer reaches the period count. Three types of Resets are possible:

- Reset on rising or falling edge (MODE = `'b00011`)
- Reset on rising edge (MODE = `'b00100`)
- Reset on falling edge (MODE = `'b00101`)

When the timer is used in conjunction with the CCP in PWM mode then an early Reset shortens the period and restarts the PWM pulse after a two clock delay. Refer to Figure 21-5.

Figure 21-5. Edge Triggered Hardware Limit Mode Timing Diagram (MODE = `'b00100`)

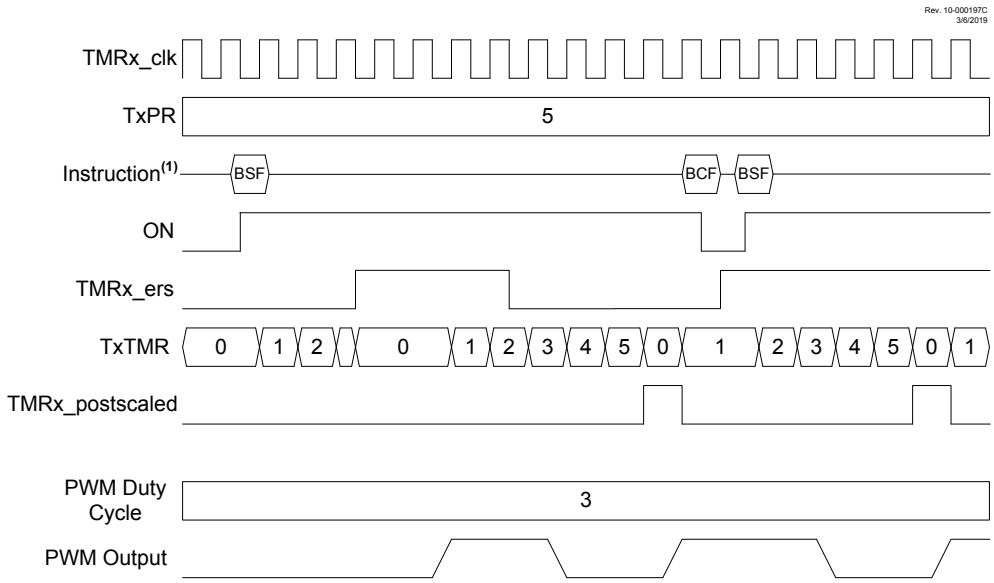

Note: 1. `BSF` and `BCF` represent Bit-Set File and Bit-Clear File instructions executed by the CPU to set or clear the ON bit of TxCON. CPU execution is asynchronous to the timer clock input.

21.8.4 Level Triggered Hardware Limit Mode

In the Level Triggered Hardware Limit Timer modes the counter is reset by high or low levels of the external signal TMRx_ers, as shown in Figure 21-6. Selecting MODE = `'b00110` will cause the timer to reset on a low-level external signal. Selecting MODE = `'b00111` will cause the timer to reset on a high-level external signal. In the example, the counter is reset while TMRx_ers = `1`. ON is controlled by `BSF` and `BCF` instructions. When ON = `0`, the external signal is ignored.

When the CCP uses the timer as the PWM time base, then the PWM output will be set high when the timer starts counting and then set low only when the timer count matches the CCPRx value. The timer is reset when either the timer count matches the TxPR value or two clock periods after the external Reset signal goes true and stays true.

The timer starts counting, and the PWM output is set high, on either the clock following the TxPR match or two clocks after the external Reset signal relinquishes the Reset. The PWM output will remain high until the timer counts up to match the CCPRx pulse-width value. If the external Reset signal goes true while the PWM output is high, then the PWM output will remain high until the Reset signal is released allowing the timer to count up to match the CCPRx value.

Figure 21-6. Level Triggered Hardware Limit Mode Timing Diagram (MODE = `'b00111`)

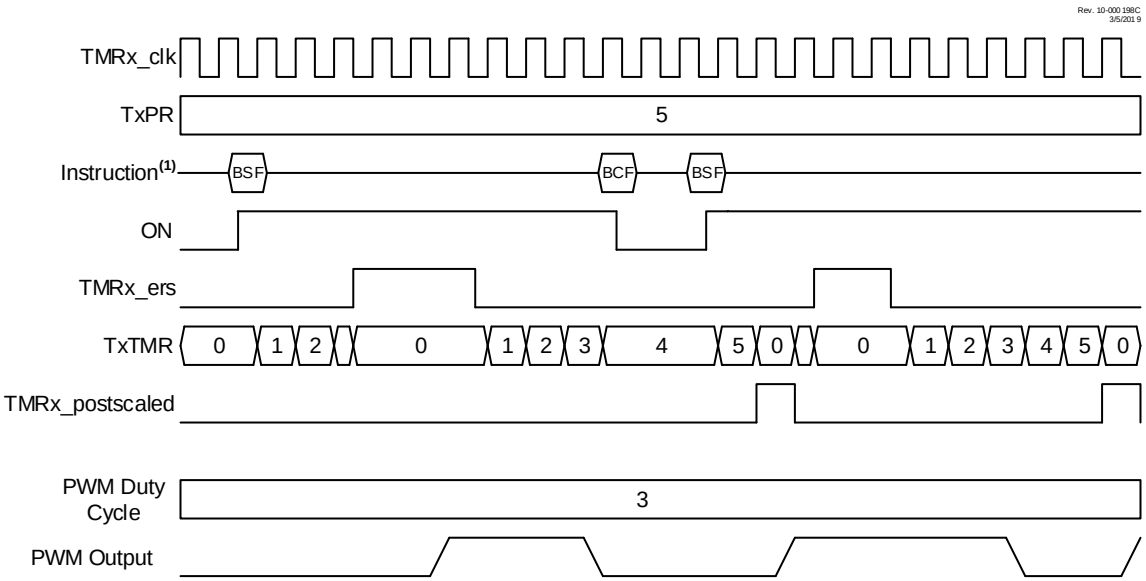

Note: 1. `BSF` and `BCF` represent Bit-Set File and Bit-Clear File instructions executed by the CPU to set or clear the ON bit of TxCON. CPU execution is asynchronous to the timer clock input.

21.8.5 Software Start One Shot Mode

In One Shot mode, the timer resets and the ON bit is cleared when the timer value matches the TxPR period value. The ON bit must be set by software to start another timer cycle. Setting MODE = `'b01000` selects One Shot mode which is illustrated in Figure 21-7. In the example, ON is controlled by `BSF` and `BCF` instructions. In the first case, a `BSF` instruction sets ON and the counter runs to completion and clears ON. In the second case, a `BSF` instruction starts the cycle, the `BCF`/`BSF` instructions turn the counter off and on during the cycle, and then it runs to completion.

When One Shot mode is used in conjunction with the CCP PWM operation, the PWM pulse drive starts concurrent with setting the ON bit. Clearing the ON bit while the PWM drive is active will extend the PWM drive. The PWM drive will terminate when the timer value matches the CCPRx pulse-width value. The PWM drive will remain off until the software sets the ON bit to start another cycle. If the software clears the ON bit after the CCPRx match but before the TxPR match, then the PWM drive will be extended by the length of time the ON bit remains cleared. Another timing cycle can only be initiated by setting the ON bit after it has been cleared by a TxPR period count match.

Figure 21-7. Software Start One Shot Mode Timing Diagram (MODE = `'b01000`)

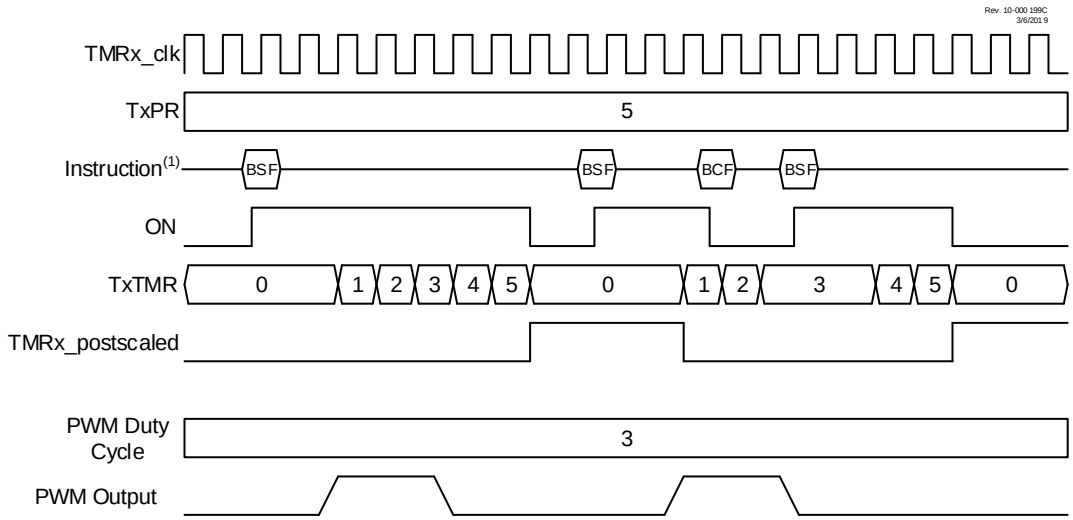

Note: 1. `BSF` and `BCF` represent Bit-Set File and Bit-Clear File instructions executed by the CPU to set or clear the ON bit of TxCON. CPU execution is asynchronous to the timer clock input.

21.8.6 Edge Triggered One Shot Mode

The Edge Triggered One Shot modes start the timer on an edge from the external signal input, after the ON bit is set, and clear the ON bit when the timer matches the TxPR period value. The following edges will start the timer:

- Rising edge (MODE = `'b01001`)
- Falling edge (MODE = `'b01010`)
- Rising or Falling edge (MODE = `'b01011`)

If the timer is halted by clearing the ON bit, then another TMRx_ers edge is required after the ON bit is set to resume counting. Figure 21-8 illustrates operation in the rising edge One Shot mode.

When Edge Triggered One Shot mode is used in conjunction with the CCP, then the edge-trigger will activate the PWM drive and the PWM drive will deactivate when the timer matches the CCPRx pulse-width value and stay deactivated when the timer halts at the TxPR period count match.

Figure 21-8. Edge Triggered One Shot Mode Timing Diagram (MODE = `'b01001`)

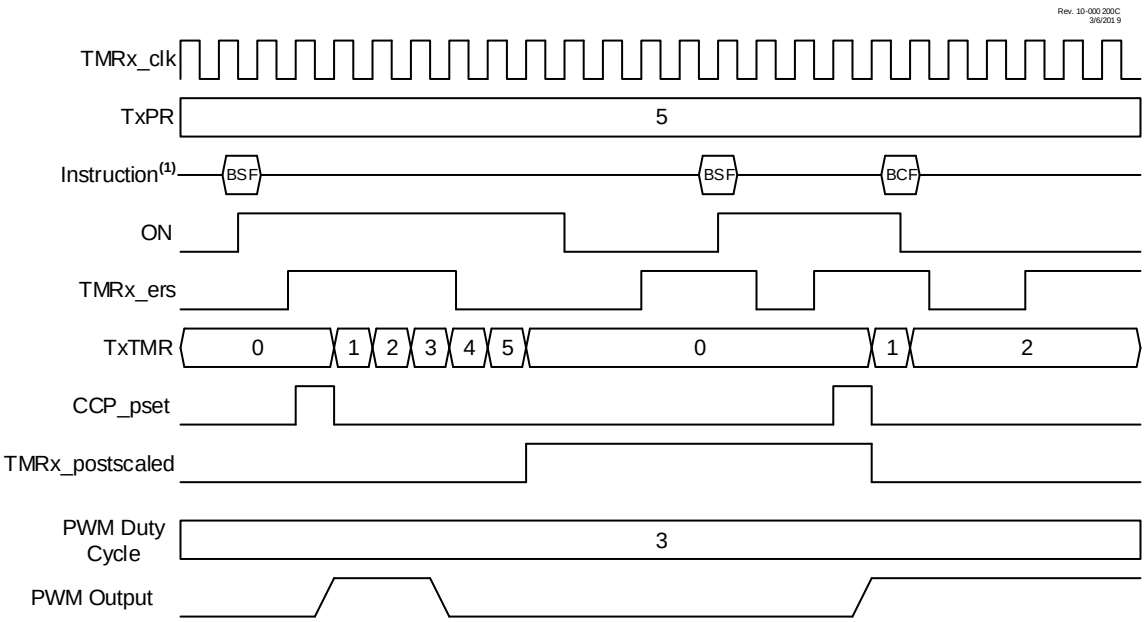

Note: 1. `BSF` and `BCF` represent Bit-Set File and Bit-Clear File instructions executed by the CPU to set or clear the ON bit of TxCON. CPU execution is asynchronous to the timer clock input.

21.8.7 Edge Triggered Hardware Limit One Shot Mode

In Edge Triggered Hardware Limit One Shot modes, the timer starts on the first external signal edge after the ON bit is set and resets on all subsequent edges. Only the first edge after the ON bit is set is needed to start the timer. The counter will resume counting automatically two clocks after all subsequent external Reset edges. Edge triggers are as follows:

- Rising edge start and Reset (MODE = `'b01100`)
- Falling edge start and Reset (MODE = `'b01101`)

The timer resets and clears the ON bit when the timer value matches the TxPR period value. External signal edges will have no effect until after software sets the ON bit. Figure 21-9 illustrates the rising edge hardware limit one-shot operation.

When this mode is used in conjunction with the CCP, then the first starting edge trigger, and all subsequent Reset edges, will activate the PWM drive. The PWM drive will deactivate when the timer matches the CCPRx pulse-width value and stay deactivated until the timer halts at the TxPR period match unless an external signal edge resets the timer before the match occurs.

Figure 21-9. Edge Triggered Hardware Limit One Shot Mode Timing Diagram (MODE = `'b01100`)

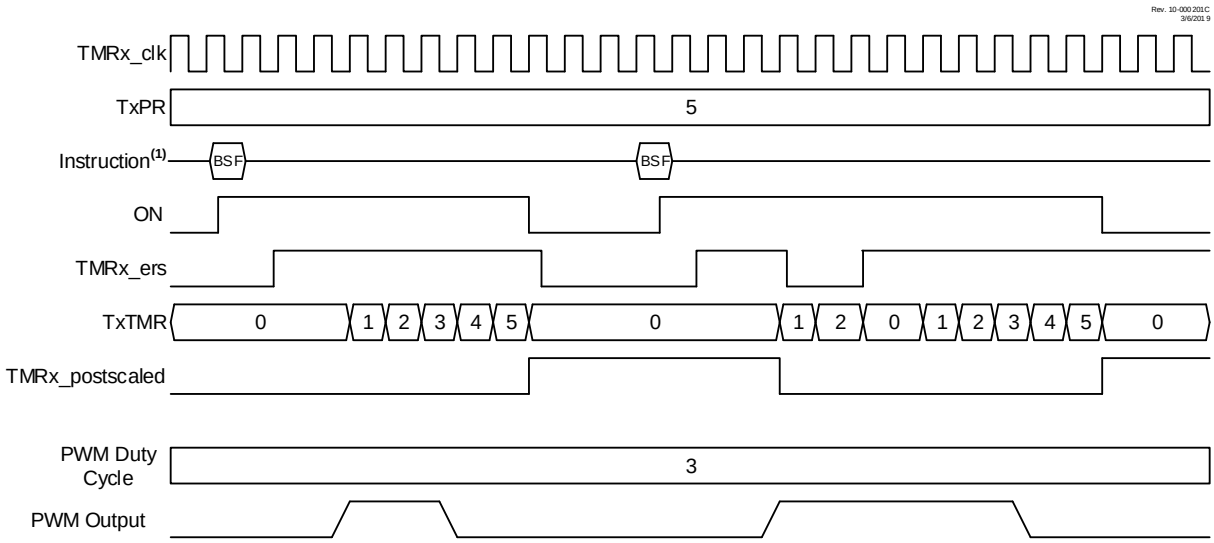

Note: 1. `BSF` and `BCF` represent Bit-Set File and Bit-Clear File instructions executed by the CPU to set or clear the ON bit of TxCON. CPU execution is asynchronous to the timer clock input.

21.8.8 Level Reset, Edge Triggered Hardware Limit One Shot Modes

In Level Triggered One Shot mode, the timer count is reset on the external signal level and starts counting on the rising/falling edge of the transition from Reset level to the active level while the ON bit is set. Reset levels are selected as follows:

- Low Reset level (MODE = `'b01110`)
- High Reset level (MODE = `'b01111`)

When the timer count matches the TxPR period count, the timer is reset and the ON bit is cleared. When the ON bit is cleared by either a TxPR match or by software control, a new external signal edge is required after the ON bit is set to start the counter.

When Level-Triggered Reset One Shot mode is used in conjunction with the CCP PWM operation, the PWM drive goes active with the external signal edge that starts the timer. The PWM drive goes inactive when the timer count equals the CCPRx pulse-width count. The PWM drive does not go active when the timer count clears at the TxPR period count match.

Figure 21-10. Low Level Reset, Edge Triggered Hardware Limit One Shot Mode Timing Diagram (MODE = `'b01110`)

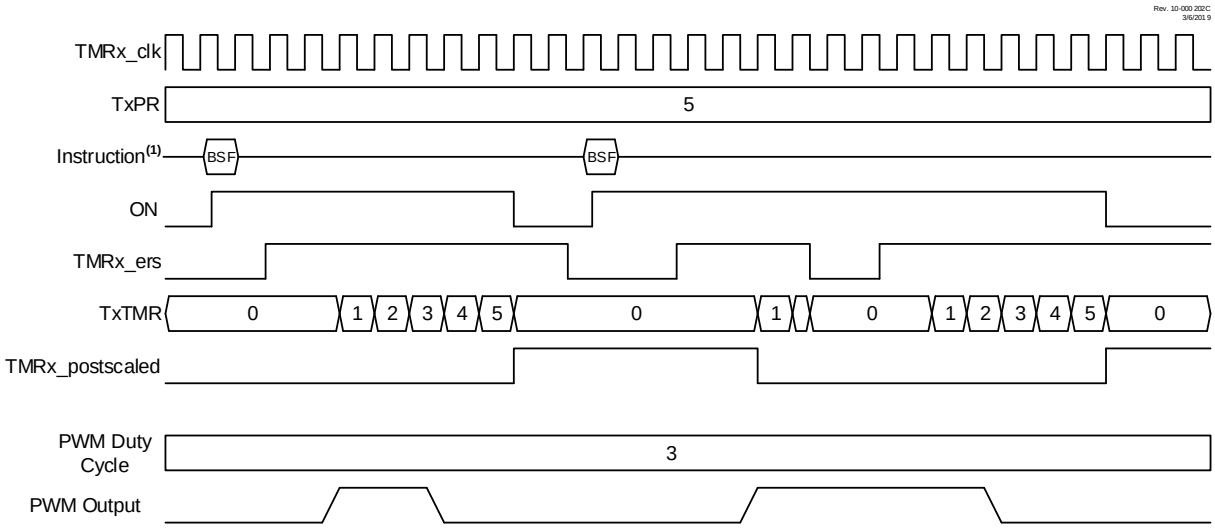

Note: 1. `BSF` and `BCF` represent Bit-Set File and Bit-Clear File instructions executed by the CPU to set or clear the ON bit of TxCON. CPU execution is asynchronous to the timer clock input.

21.8.9 Edge Triggered Monostable Modes

The Edge Triggered Monostable modes start the timer on an edge from the external Reset signal input, after the ON bit is set, and stop incrementing the timer when the timer matches the TxPR period value. The following edges will start the timer:

- Rising edge (MODE = `'b10001`)
- Falling edge (MODE = `'b10010`)
- Rising or Falling edge (MODE = `'b10011`)

When an Edge Triggered Monostable mode is used in conjunction with the CCP PWM operation, the PWM drive goes active with the external Reset signal edge that starts the timer, but will not go active when the timer matches the TxPR value. While the timer is incrementing, additional edges on the external Reset signal will not affect the CCP PWM.

Figure 21-11. Rising Edge Triggered Monostable Mode Timing Diagram (MODE = `b10001)

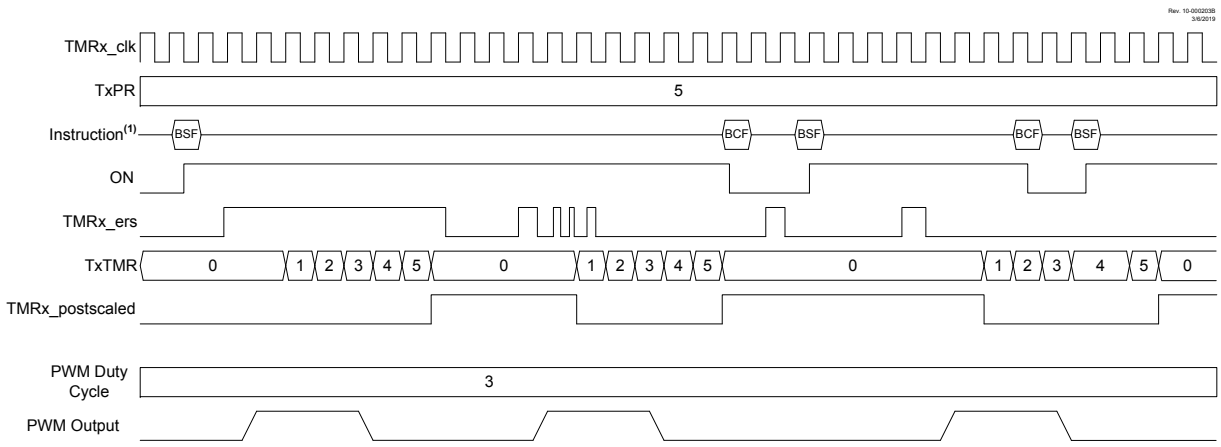

Note: 1. BSF and BCF represent Bit-Set File and Bit-Clear File instructions executed by the CPU to set or clear the ON bit of TxCON. CPU execution is asynchronous to the timer clock input.

21.8.10 Level Triggered Hardware Limit One Shot Modes

The Level Triggered Hardware Limit One Shot modes hold the timer in Reset on an external Reset level and start counting when both the ON bit is set and the external signal is not at the Reset level. If one of either the external signal is not in Reset or the ON bit is set, then the other signal being set/made active will start the timer. Reset levels are selected as follows:

- Low Reset level (MODE = `b10110)
- High Reset level (MODE = `b10111)

When the timer count matches the TxPR period count, the timer is reset and the ON bit is cleared. When the ON bit is cleared by either a TxPR match or by software control, the timer will stay in Reset until both the ON bit is set and the external signal is not at the Reset level.

When Level Triggered Hardware Limit One Shot modes are used in conjunction with the CCP PWM operation, the PWM drive goes active with either the external signal edge or the setting of the ON bit, whichever of the two starts the timer.

Figure 21-12. Level Triggered Hardware Limit One Shot Mode Timing Diagram (MODE = `b10110)

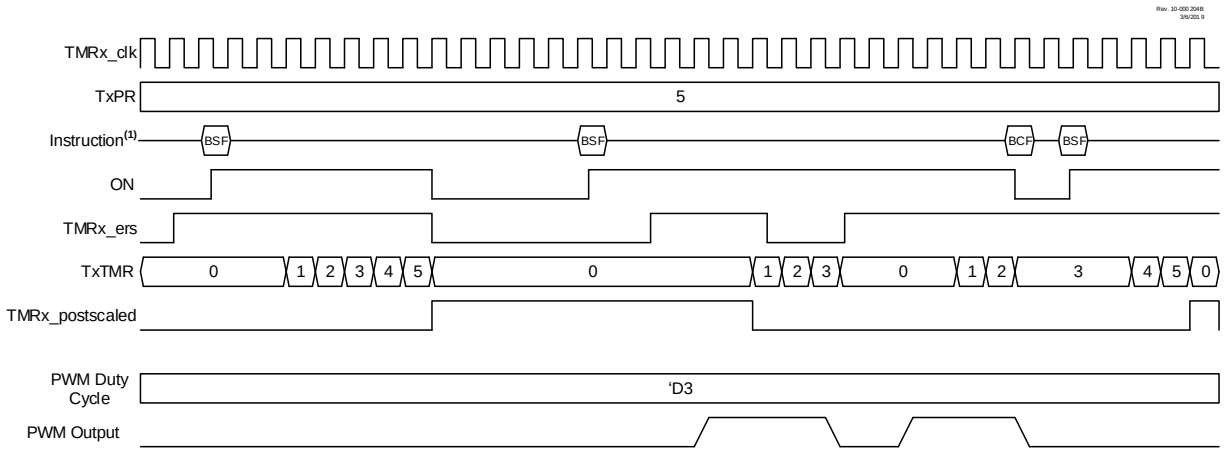

Note: 1. BSF and BCF represent Bit-Set File and Bit-Clear File instructions executed by the CPU to set or clear the ON bit of TxCON. CPU execution is asynchronous to the timer clock input.

21.9 Timer2 Operation During Sleep

When PSYNC = 1, Timer2 cannot be operated while the processor is in Sleep mode. The contents of the T2TMR and T2PR registers will remain unchanged while the processor is in Sleep mode.

When PSYNC = 0, Timer2 will operate in Sleep as long as the clock source selected is also still running. If any internal oscillator is selected as the clock source, it will stay active during Sleep mode.

21.10 Register Definitions: Timer2 Control

Long bit name prefixes for the Timer2 peripherals are shown in the table below. Refer to the **"Long Bit Names"** section of the **"Register and Bit Naming Conventions"** chapter for more information.

Table 21-2. Timer2 Long Bit Name Prefixes

Peripheral	Bit Name Prefix
Timer2	T2

Important: References to module Timer2 apply to all the even numbered timers on this device (Timer2, Timer4, etc.).

21.10.1 TxTMR

Name: TxTMR
Offset: 0x028C

Timer Counter Register

Bit	7	6	5	4	3	2	1	0
	TxTMR[7:0]							
Access	R/W	R/W	R/W	R/W	R/W	R/W	R/W	R/W
Reset	0	0	0	0	0	0	0	0

Bits 7:0 – TxTMR[7:0] Timerx Counter

21.10.2 TxPR

Name: TxPR
Offset: 0x028D

Timer Period Register

Bit	7	6	5	4	3	2	1	0
	TxPR[7:0]							
Access	R/W	R/W	R/W	R/W	R/W	R/W	R/W	R/W
Reset	1	1	1	1	1	1	1	1

Bits 7:0 – TxPR[7:0] Timer Period Register

Value	Description
`0 to 255`	The timer restarts at ‘`0`’ when TxTMR reaches the TxPR value

21.10.3 TxCON

Name: TxCON
Offset: 0x028E

Timerx Control Register

Bit	7	6	5	4	3	2	1	0
	ON	CKPS[2:0]			OUTPS[3:0]			
Access	R/W/HC	R/W	R/W	R/W	R/W	R/W	R/W	R/W
Reset	0	0	0	0	0	0	0	0

Bit 7 – ON Timer On[(1)]

Value	Description
1	Timer is on
0	Timer is off: All counters and state machines are reset

Bits 6:4 – CKPS[2:0] Timer Clock Prescale Select

Value	Description
111	1:128 Prescaler
110	1:64 Prescaler
101	1:32 Prescaler
100	1:16 Prescaler
011	1:8 Prescaler
010	1:4 Prescaler
001	1:2 Prescaler
000	1:1 Prescaler

Bits 3:0 – OUTPS[3:0] Timer Output Postscaler Select

Value	Description
1111	1:16 Postscaler
1110	1:15 Postscaler
1101	1:14 Postscaler
1100	1:13 Postscaler
1011	1:12 Postscaler
1010	1:11 Postscaler
1001	1:10 Postscaler
1000	1:9 Postscaler
0111	1:8 Postscaler
0110	1:7 Postscaler
0101	1:6 Postscaler
0100	1:5 Postscaler
0011	1:4 Postscaler
0010	1:3 Postscaler
0001	1:2 Postscaler
0000	1:1 Postscaler

Note:

1. In certain modes, the ON bit will be auto-cleared by hardware. See Table 21-1.

21.10.4 TxHLT

Name: TxHLT
Offset: 0x028F

Timer Hardware Limit Control Register

Bit	7	6	5	4	3	2	1	0
	PSYNC	CPOL	CSYNC	MODE[4:0]				
Access	R/W	R/W	R/W	R/W	R/W	R/W	R/W	R/W
Reset	0	0	0	0	0	0	0	0

Bit 7 – PSYNC Timer Prescaler Synchronization Enable[1, 2]

Value	Description
1	Timer Prescaler Output is synchronized to $F_{OSC}/4$
0	Timer Prescaler Output is not synchronized to $F_{OSC}/4$

Bit 6 – CPOL Timer Clock Polarity Selection[3]

Value	Description
1	Falling edge of input clock clocks timer/prescaler
0	Rising edge of input clock clocks timer/prescaler

Bit 5 – CSYNC Timer Clock Synchronization Enable[4, 5]

Value	Description
1	ON bit is synchronized to timer clock input
0	ON bit is not synchronized to timer clock input

Bits 4:0 – MODE[4:0] Timer Control Mode Selection[6, 7]

Value	Description
00000 to 11111	See Table 21-1

Notes:

1. Setting this bit ensures that reading TxTMR will return a valid data value.
2. When this bit is '1', the Timer cannot operate in Sleep mode.
3. CKPOL must not be changed while ON = 1.
4. Setting this bit ensures glitch-free operation when the ON is enabled or disabled.
5. When this bit is set, then the timer operation will be delayed by two input clocks after the ON bit is set.
6. Unless otherwise indicated, all modes start upon ON = 1 and stop upon ON = 0 (stops occur without affecting the value of TxTMR).
7. When TxTMR = TxPR, the next clock clears TxTMR, regardless of the operating mode.

21.10.5 TxCLKCON

Name: TxCLKCON
Offset: 0x0290

Timer Clock Source Selection Register

Bit	7	6	5	4	3	2	1	0
						CS[2:0]		
Access						R/W	R/W	R/W
Reset						0	0	0

Bits 2:0 – CS[2:0] Timer Clock Source Selection

Table 21-3. Clock Source Selection

CS	Clock Source
111	Reserved
110	MFINTOSC (32 kHz)
101	MFINTOSC (500 kHz)
100	LFINTOSC
011	HFINTOSC
010	F_{OSC}
001	$F_{OSC}/4$
000	Pin selected by T2INPPS

21.10.6 TxRST

Name: TxRST
Offset: 0x0291

Timer External Reset Signal Selection Register

Bit	7	6	5	4	3	2	1	0
					RSEL[3:0]			
Access					R/W	R/W	R/W	R/W
Reset					0	0	0	0

Bits 3:0 – RSEL[3:0] External Reset Source Selection

Table 21-4. External Reset Sources

RSEL	Reset Source
1111-0101	Reserved
0100	PWM4_OUT
0011	PWM3_OUT
0010	CCP2_OUT
0001	CCP1_OUT
0000	Pin selected by T2INPPS

21.11 Register Summary - Timer2

Offset	Name	Bit Pos.	7	6	5	4	3	2	1	0
0x00 ... 0x028B	Reserved									
0x028C	T2TMR	7:0	T2TMR[7:0]							
0x028D	T2PR	7:0	T2PR[7:0]							
0x028E	T2CON	7:0	ON	CKPS[2:0]			OUTPS[3:0]			
0x028F	T2HLT	7:0	PSYNC	CPOL	CSYNC	MODE[4:0]				
0x0290	T2CLKCON	7:0						CS[2:0]		
0x0291	T2RST	7:0					RSEL[3:0]			

22. CCP - Capture/Compare/PWM Module

The Capture/Compare/PWM module is a peripheral that allows the user to time and control different events, and to generate Pulse-Width Modulation (PWM) signals. In Capture mode, the peripheral allows the timing of the duration of an event. The Compare mode allows the user to trigger an external event when a predetermined amount of time has expired. The PWM mode can generate Pulse-Width Modulated signals of varying frequency and duty cycle.

The Capture and Compare functions are identical for all CCP modules.

Important: In devices with more than one CCP module, it is very important to pay close attention to the register names used. Throughout this section, the prefix 'CCPx' is used as a generic replacement for specific numbering. A number placed where the 'x' is in the prefix is used to distinguish between separate modules. For example, CCP1CON and CCP2CON control the same operational aspects of two completely different CCP modules.

22.1 CCP Module Configuration

Each Capture/Compare/PWM module is associated with a control register (CCPxCON), a capture input selection register (CCPxCAP) and a data register (CCPRx). The data register, in turn, is comprised of two 8-bit registers: CCPRxL (low byte) and CCPRxH (high byte).

22.1.1 CCP Modules and Timer Resources

The CCP modules utilize Timers 1 and 2 that vary with the selected mode. Various timers are available to the CCP modules in Capture, Compare or PWM modes, as shown in the table below.

Table 22-1. CCP Mode - Timer Resources

CCP Mode	Timer Resource
Capture	Timer1
Compare	
PWM	Timer2

All of the modules may be active at once and may share the same timer resource if they are configured to operate in the same mode (Capture/Compare or PWM) at the same time.

22.1.2 Open-Drain Output Option

When operating in Output mode (the Compare or PWM modes), the drivers for the CCPx pins can be optionally configured as open-drain outputs. This feature allows the voltage level on the pin to be pulled to a higher level through an external pull-up resistor and allows the output to communicate with external circuits without the need for additional level shifters.

22.2 Capture Mode

Capture mode makes use of the 16-bit odd numbered timer resources (Timer1) . When an event occurs on the capture source, the 16-bit CCPRx register captures and stores the 16-bit value of the TMRx register. An event is defined as one of the following and is configured by the MODE bits:

- Every falling edge of CCPx input
- Every rising edge of CCPx input
- Every 4th rising edge of CCPx input
- Every 16th rising edge of CCPx input

- Every edge of CCPx input (rising or falling)

When a capture is made, the CCP Interrupt Flag (CCPxIF) bit of the PIRx register is set. The interrupt flag must be cleared in software. If another capture occurs before the value in the CCPRx register is read, the old captured value is overwritten by the new captured value. The following figure shows a simplified diagram of the capture operation.

Important: If an event occurs during a 2-byte read, the high and low-byte data will be from different events. It is recommended while reading the CCPRx register pair to either disable the module or read the register pair twice for data integrity.

Figure 22-1. Capture Mode Operation Block Diagram

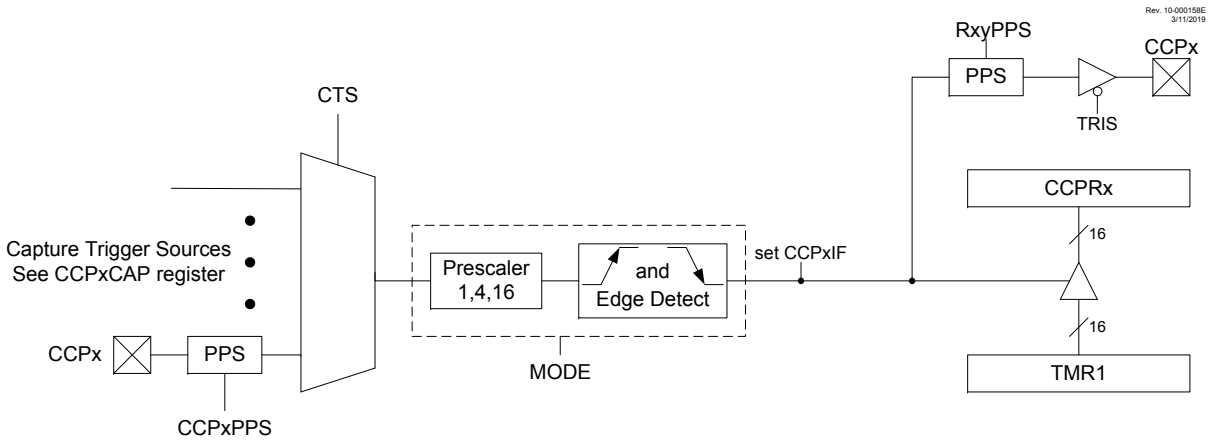

22.2.1 Capture Sources

The capture source is selected with the CTS bits.

In Capture mode, the CCPx pin must be configured as an input by setting the associated TRIS control bit.

Important: If the CCPx pin is configured as an output, a write to the port can cause a capture event.

22.2.2 Timer1 Mode for Capture

Timer1 must be running in Timer mode or Synchronized Counter mode for the CCP module to use the capture feature. In Asynchronous Counter mode, the capture operation may not work.

See the "**TMR1 - Timer1 Module with Gate Control**" section for more information on configuring Timer1.

22.2.3 Software Interrupt Mode

When the Capture mode is changed, a false capture interrupt may be generated. The user will keep the CCPxIE Interrupt Enable bit of the PIEx register clear to avoid false interrupts. Additionally, the user will clear the CCPxIF Interrupt Flag bit of the PIRx register following any change in Operating mode.

Important: Clocking Timer1 from the system clock (F_{OSC}) must not be used in Capture mode. For Capture mode to recognize the trigger event on the CCPx pin, Timer1 must be clocked from the instruction clock ($F_{OSC}/4$) or from an external clock source.

22.2.4 CCP Prescaler

There are four prescaler settings specified by the MODE bits. Whenever the CCP module is turned off, or the CCP module is not in Capture mode, the prescaler counter is cleared. Any Reset will clear the prescaler counter.

Switching from one capture prescaler to another does not clear the prescaler and may generate a false interrupt. To avoid this unexpected operation, turn the module off by clearing the CCPxCON register before changing the prescaler. The example below demonstrates the code to perform this function.

Example 22-1. Changing Between Capture Prescalers

```
BANKSEL CCP1CON
CLRF    CCP1CON         ;Turn CCP module off
MOVLW   NEW_CAPT_PS     ;CCP ON and Prescaler select â†’ W
MOVWF   CCP1CON         ;Load CCP1CON with this value
```

22.2.5 Capture During Sleep

Capture mode depends upon the Timer1 module for proper operation. There are two options for driving the Timer1 module in Capture mode. It can be driven by the instruction clock ($F_{OSC}/4$), or by an external clock source.

When Timer1 is clocked by $F_{OSC}/4$, Timer1 will not increment during Sleep. When the device wakes from Sleep, Timer1 will continue from its previous state.

Capture mode will operate during Sleep when Timer1 is clocked by an external clock source.

22.3 Compare Mode

The Compare mode function described in this section is available and identical for all CCP modules.

Compare mode makes use of the 16-bit odd numbered Timer resources (Timer1). The 16-bit value of the CCPRx register is constantly compared against the 16-bit value of the TMR1 register. When a match occurs, one of the following events can occur:

- Toggle the CCPx output and clear TMR1
- Toggle the CCPx output without clearing TMR1
- Set the CCPx output
- Clear the CCPx output
- Generate a Pulse output
- Generate a Pulse output and clear TMR1

The action on the pin is based on the value of the MODE control bits.

All Compare modes can generate an interrupt. When MODE = `'b0001` or `'b1011`, the CCP resets the TMR1 register.

The following figure shows a simplified diagram of the compare operation.

Figure 22-2. Compare Mode Operation Block Diagram

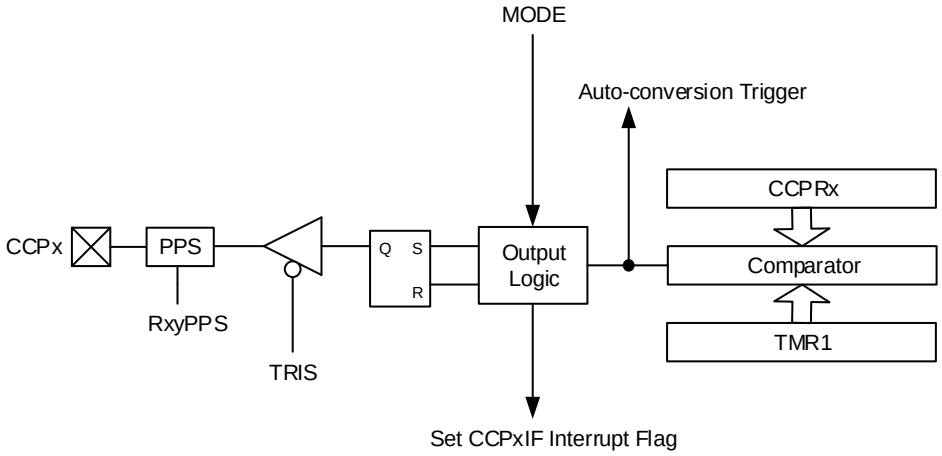

22.3.1 CCPx Pin Configuration

The CCPx pin must be configured as an output in software by clearing the associated TRIS bit and defining the appropriate output pin through the RxyPPS registers. See the **"PPS - Peripheral Pin Select Module"** section for more details.

The CCP output can also be used as an input for other peripherals.

Important: Clearing the CCPxCON register will force the CCPx compare output latch to the default low level. This is not the PORT I/O data latch.

22.3.2 Timer1 Mode for Compare

In Compare mode, Timer1 must be running in either Timer mode or Synchronized Counter mode. The compare operation may not work in Asynchronous Counter mode.

See the "**TMR1 - Timer1 Module with Gate Control**" section for more information on configuring Timer1.

Important: Clocking Timer1 from the system clock (F_{OSC}) must not be used in Compare mode. For Compare mode to recognize the trigger event on the CCPx pin, Timer1 must be clocked from the instruction clock ($F_{OSC}/4$) or from an external clock source.

22.3.3 Compare During Sleep

Since F_{OSC} is shut down during Sleep mode, the Compare mode will not function properly during Sleep, unless the timer is running. The device will wake on interrupt (if enabled).

22.4 PWM Overview

Pulse-Width Modulation (PWM) is a scheme that controls power to a load by switching quickly between fully ON and fully OFF states. The PWM signal resembles a square wave where the high portion of the signal is considered the ON state and the low portion of the signal is considered the OFF state. The high portion, also known as the pulse width, can vary in time and is defined in steps. A larger number of steps applied, which lengthens the pulse width, also supplies more power to the load. Lowering the number of steps applied, which shortens the pulse width, supplies less power. The PWM period is defined as the duration of one complete cycle or the total amount of ON and OFF time combined.

© 2020-2022 Microchip Technology Inc.
and its subsidiaries

PWM resolution defines the maximum number of steps that can be present in a single PWM period. A higher resolution allows for more precise control of the power applied to the load.

The term duty cycle describes the proportion of the ON time to the OFF time and is expressed in percentages, where 0% is fully OFF and 100% is fully ON. A lower duty cycle corresponds to less power applied and a higher duty cycle corresponds to more power applied. The figure below shows a typical waveform of the PWM signal.

Figure 22-3. CCP PWM Output Signal

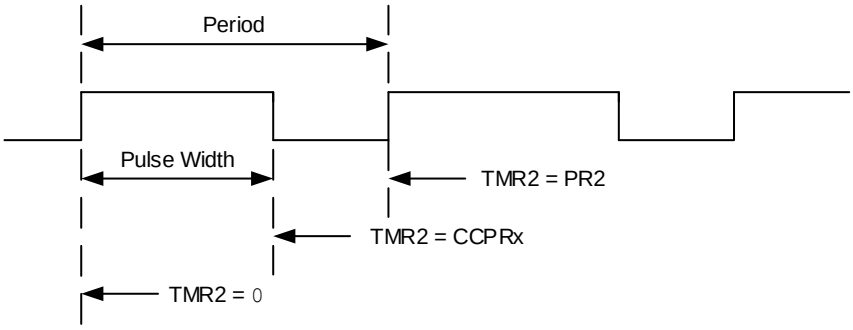

22.4.1 Standard PWM Operation

The standard PWM function described in this section is available and identical for all CCP modules. It generates a PWM signal on the CCPx pin with up to 10 bits of resolution. The period, duty cycle, and resolution are controlled by the following registers:

- Even numbered TxPR (T2PR) registers
- Even numbered TxCON (T2CON) registers
- 16-bit CCPRx registers
- CCPxCON registers

It is required to have $F_{OSC}/4$ as the clock input to T2TMR for correct PWM operation. The following figure shows a simplified block diagram of PWM operation.

Figure 22-4. Simplified PWM Block Diagram

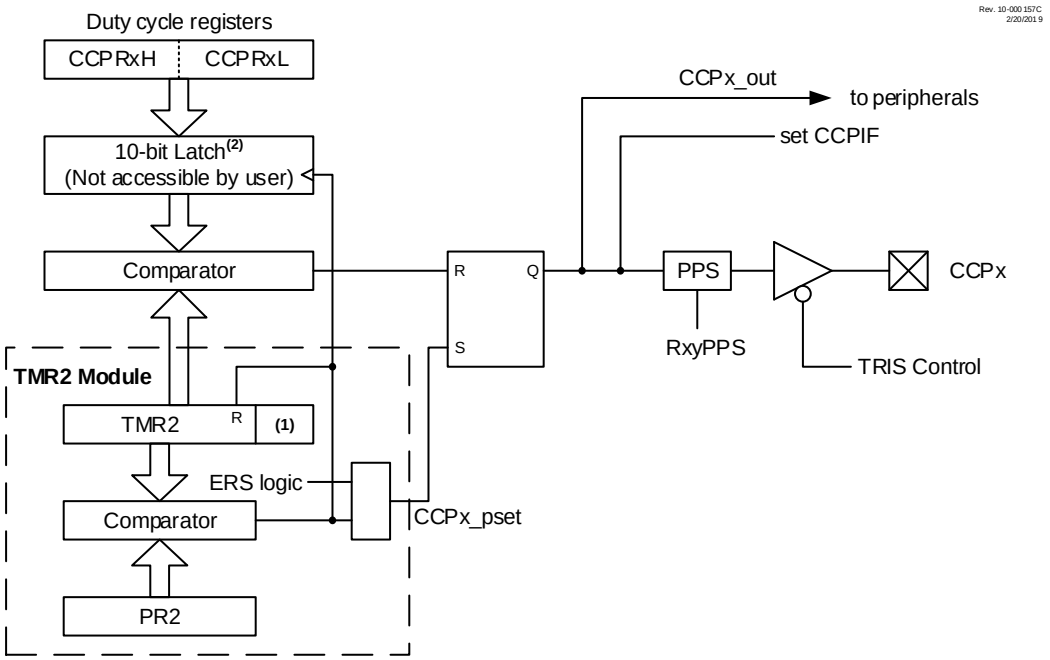

Notes: 1. An 8-bit timer is concatenated with two bits generated by Fosc or two bits of the internal prescaler to create 10-bit time base.
2. The alignment of the 10 bits from the CCPR register is determined by the CCPxFMT bit.

Important: The corresponding TRIS bit must be cleared to enable the PWM output on the CCPx pin.

22.4.2 Timer2 Timer Resource

The PWM Standard mode makes use of the 8-bit Timer2 timer resources to specify the PWM period.

22.4.3 PWM Period

The PWM period is specified by the T2PR register of Timer2. The PWM period can be calculated using the formula in the equation below.

Equation 22-1. PWM Period

$$PWM\ Period = [(T2PR + 1)] \bullet 4 \bullet T_{OSC} \bullet (TMR2\ \mathrm{Prescale}\ Value)$$

where $T_{OSC} = 1/F_{OSC}$

When T2TMR is equal to T2PR, the following three events occur on the next increment event:

- T2TMR is cleared
- The CCPx pin is set (Exception: If the PWM duty cycle = 0%, the pin will not be set)
- The PWM duty cycle is transferred from the CCPRx register into a 10-bit buffer

Important: The Timer postscaler (see the "**Timer2 Interrupt**" section) is not used in the determination of the PWM frequency.

22.4.4 PWM Duty Cycle

The PWM duty cycle is specified by writing a 10-bit value to the CCPRx register. The alignment of the 10-bit value is determined by the FMT bit (see Figure 22-5). The CCPRx register can be written to at any time. However, the duty cycle value is not latched into the 10-bit buffer until after a match between T2PR and T2TMR.

The equations below are used to calculate the PWM pulse width and the PWM duty cycle ratio.

Figure 22-5. PWM 10-Bit Alignment

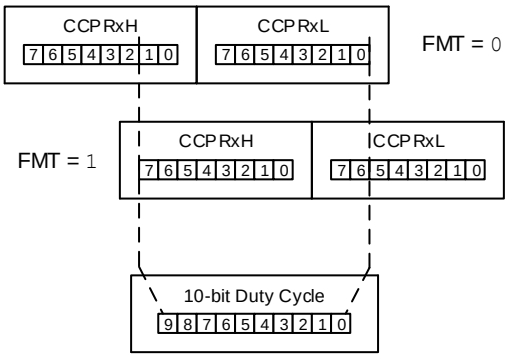

Equation 22-2. Pulse Width

$$Pulse\ Width = (CCPRxH{:}CCPRxL\ register\ value) \bullet T_{OSC} \bullet (TMR2\ \mathrm{Prescale}\ Value)$$

Equation 22-3. Duty Cycle

$$DutyCycleRatio = \frac{(CCPRxH{:}CCPRxL\ register\ value)}{4(T2PR+1)}$$

The CCPRx register is used to double buffer the PWM duty cycle. This double buffering is essential for glitchless PWM operation.

The 8-bit timer T2TMR register is concatenated with either the 2-bit internal system clock (F_{OSC}), or two bits of the prescaler, to create the 10-bit time base. The system clock is used if the Timer2 prescaler is set to 1:1.

When the 10-bit time base matches the CCPRx register, then the CCPx pin is cleared (see Figure 22-4).

22.4.5 PWM Resolution

The resolution determines the number of available duty cycles for a given period. For example, a 10-bit resolution will result in 1024 discrete duty cycles, whereas an 8-bit resolution will result in 256 discrete duty cycles.

The maximum PWM resolution is 10 bits when T2PR is `0xFF`. The resolution is a function of the T2PR register value, as shown below.

Equation 22-4. PWM Resolution

$$\mathrm{Re}solution = \frac{\log[4(T2PR+1)]}{\log(2)} bits$$

Important: If the pulse-width value is greater than the period, the assigned PWM pin(s) will remain unchanged.

Table 22-2. Example PWM Frequencies and Resolutions (F_{OSC} = 20 MHz)

PWM Frequency	1.22 kHz	4.88 kHz	19.53 kHz	78.12 kHz	156.3 kHz	208.3 kHz
Timer Prescale	16	4	1	1	1	1
T2PR Value	0xFF	0xFF	0xFF	0x3F	0x1F	0x17
Maximum Resolution (bits)	10	10	10	8	7	6.6

Table 22-3. Example PWM Frequencies and Resolutions (F_{OSC} = 8 MHz)

PWM Frequency	1.22 kHz	4.90 kHz	19.61 kHz	76.92 kHz	153.85 kHz	200.0 kHz
Timer Prescale	16	4	1	1	1	1
T2PR Value	0x65	0x65	0x65	0x19	0x0C	0x09
Maximum Resolution (bits)	8	8	8	6	5	5

22.4.6 Operation in Sleep Mode

In Sleep mode, the T2TMR register will not increment and the state of the module will not change. If the CCPx pin is driving a value, it will continue to drive that value. When the device wakes up, T2TMR will continue from the previous state.

22.4.7 Changes in System Clock Frequency

The PWM frequency is derived from the system clock frequency. Any changes in the system clock frequency will result in changes to the PWM frequency. See the "**OSC - Oscillator Module**" section for additional details.

22.4.8 Effects of Reset

Any Reset will force all ports to Input mode and the CCP registers to their Reset states.

22.4.9 Setup for PWM Operation

The following steps illustrate how to configure the CCP module for standard PWM operation:

1. Select the desired output pin with the RxyPPS control to select CCPx as the source. Disable the selected pin output driver by setting the associated TRIS bit. The output will be enabled later at the end of the PWM setup.
2. Load the timer period register T2PR with the PWM period value.
3. Configure the CCP module for the PWM mode by loading the CCPxCON register with the appropriate values.
4. Load the CCPRx register with the PWM duty cycle value and configure the FMT bit to set the proper register alignment.
5. Configure and start the Timer:
   - Clear the TMR2IF Interrupt Flag bit of the PIRx register. See the Note below.
   - Select the timer clock source to be as $F_{OSC}/4$. This is required for correct operation of the PWM module.
   - Configure the CKPS bits of the T2CON register with the desired Timer prescale value.
   - Enable the Timer by setting the ON bit of the T2CON register.
6. Enable the PWM output:
   - Wait until the Timer overflows and the TMR2IF bit of the PIRx register is set. See the Note below.
   - Enable the CCPx pin output driver by clearing the associated TRIS bit.

Important: To send a complete duty cycle and period on the first PWM output, the above steps must be included in the setup sequence. If it is not critical to start with a complete PWM signal on the first output, then step 6 may be ignored.

22.5 Register Definitions: CCP Control

Long bit name prefixes for the CCP peripherals are shown in the following table. Refer to the **“Long Bit Names”** section in the **“Register and Bit Naming Conventions”** chapter for more information.

Table 22-4. CCP Long Bit Name Prefixes

Peripheral	Bit Name Prefix
CCP1	CCP1
CCP2	CCP2

22.5.1 CCPxCON

Name: CCPxCON
Offset: 0x30E,0x312

CCP Control Register

Bit	7	6	5	4	3	2	1	0
	EN		OUT	FMT	MODE[3:0]			
Access	R/W		R	R/W	R/W	R/W	R/W	R/W
Reset	0		x	0	0	0	0	0

Bit 7 – EN CCP Module Enable

Value	Description
1	CCP is enabled
0	CCP is disabled

Bit 5 – OUT CCP Output Data (read-only)

Bit 4 – FMT CCPxRH:L Value Alignment (PWM mode)

Value	Condition	Description
x	Capture mode	Not used
x	Compare mode	Not used
1	PWM mode	Left aligned format
0	PWM mode	Right aligned format

Bits 3:0 – MODE[3:0] CCP Mode Select

Table 22-5. CCPx Mode Select

MODE Value	Operating Mode	Operation	Set CCPxIF
11xx	PWM	PWM operation	Yes
1011	Compare	Pulse output; clear TMR1(2)	Yes
1010		Pulse output	Yes
1001		Clear output(1)	Yes
1000		Set output(1)	Yes
0111	Capture	Every 16th rising edge of CCPx input	Yes
0110		Every 4th rising edge of CCPx input	Yes
0101		Every rising edge of CCPx input	Yes
0100		Every falling edge of CCPx input	Yes
0011		Every edge of CCPx input	Yes
0010	Compare	Toggle output	Yes
0001		Toggle output; clear TMR1(2)	Yes
0000	Disabled		—

Notes:

1. The set and clear operations of the Compare mode are reset by setting MODE = `'b0000` or EN = `0`.
2. When MODE = `'b0001` or `'b1011`, then the timer associated with the CCP module is cleared. TMR1 is the default selection for the CCP module, so it is used for indication purposes only.

22.5.2 CCPxCAP

Name: CCPxCAP
Offset: 0x30F,0x313

Capture Trigger Input Selection Register

Bit	7	6	5	4	3	2	1	0
							CTS[1:0]	
Access							R/W	R/W
Reset							0	0

Bits 1:0 – CTS[1:0] Capture Trigger Input Selection

Table 22-6. Capture Trigger Sources

CTS Value	Source
11-10	Reserved
01	IOC Interrupt
00	Pin selected by CCPxPPS

22.5.3 CCPRx

Name: CCPRx
Offset: 0x30C,0x310

Capture/Compare/Pulse-Width Register

Bit	15	14	13	12	11	10	9	8
	CCPR[15:8]							
Access	R/W	R/W	R/W	R/W	R/W	R/W	R/W	R/W
Reset	x	x	x	x	x	x	x	x

Bit	7	6	5	4	3	2	1	0
	CCPR[7:0]							
Access	R/W	R/W	R/W	R/W	R/W	R/W	R/W	R/W
Reset	x	x	x	x	x	x	x	x

Bits 15:0 – CCPR[15:0] Capture/Compare/Pulse-Width
Reset States: POR/BOR = xxxxxxxxxxxxxxxx
All other Resets = uuuuuuuuuuuuuuuu

Notes: The individual bytes in this multibyte register can be accessed with the following register names:

- When MODE = Capture or Compare
  - CCPRxH: Accesses the high byte CCPR[15:8]
  - CCPRxL: Accesses the low byte CCPR[7:0]
- When MODE = PWM and FMT = `0`
  - CCPRx[15:10]: Not used
  - CCPRxH[1:0]: Accesses the two Most Significant bits CCPR[9:8]
  - CCPRxL: Accesses the eight Least Significant bits CCPR[7:0]
- When MODE = PWM and FMT = `1`
  - CCPRxH: Accesses the eight Most Significant bits CCPR[9:2]
  - CCPRxL[7:6]: Accesses the two Least Significant bits CCPR[1:0]
  - CCPRx[5:0]: Not used

22.6 Register Summary - CCP Control

Offset	Name	Bit Pos.	7	6	5	4	3	2	1	0
0x00 ... 0x030B	Reserved									
0x030C	CCPR1	7:0	CCPR[7:0]							
		15:8	CCPR[15:8]							
0x030E	CCP1CON	7:0	EN		OUT	FMT	MODE[3:0]			
0x030F	CCP1CAP	7:0							CTS[1:0]	
0x0310	CCPR2	7:0	CCPR[7:0]							
		15:8	CCPR[15:8]							
0x0312	CCP2CON	7:0	EN		OUT	FMT	MODE[3:0]			
0x0313	CCP2CAP	7:0							CTS[1:0]	

23. PWM - Pulse-Width Modulation

The PWM module generates a Pulse-Width Modulated signal determined by the duty cycle, period, and resolution that are configured by the following registers:

- T2PR
- T2CON
- PWMxDC
- PWMxCON

Important: The corresponding TRIS bit must be cleared to enable the PWM output on the PWMx pin.

Each PWM module uses the same timer source, Timer2, to control each module.

Figure 23-1 shows a simplified block diagram of PWM operation.

Figure 23-2 shows a typical waveform of the PWM signal.

Figure 23-1. Simplified PWM Block Diagram

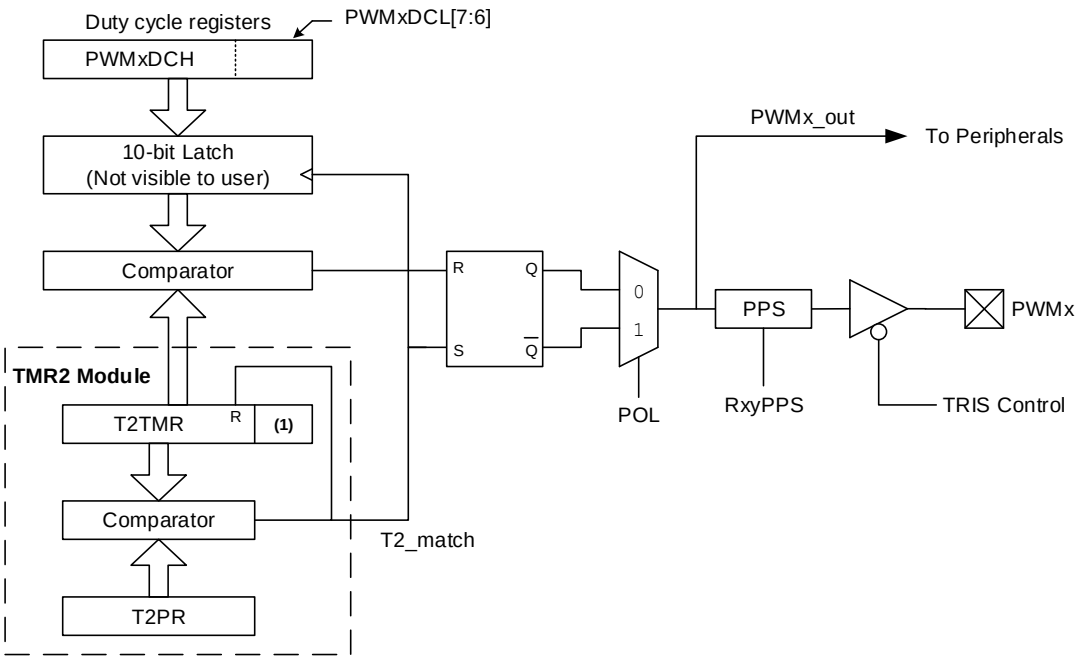

Note:

1. 8-bit timer is concatenated with two bits generated by F_{OSC} or two bits of the internal prescaler to create 10-bit time base.

Figure 23-2. PWM Output

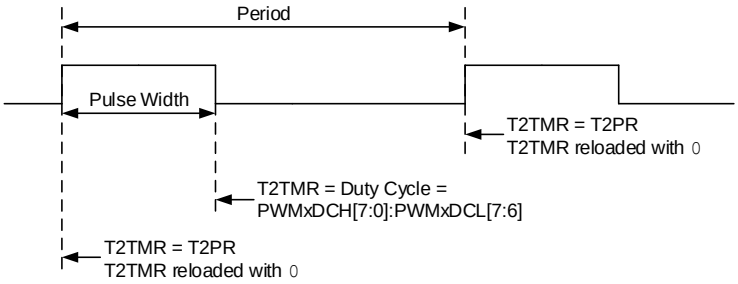

For a step-by-step procedure on how to set up this module for PWM operation, refer to 23.9. Setup for PWM Operation Using PWMx Output Pins.

23.1 Fundamental Operation

The PWM module produces a 10-bit resolution output. The timer selection for PWMx is TMR2. T2TMR and T2PR set the period of the PWM. The PWMxDCL and PWMxDCH registers configure the duty cycle. The period is common to all PWM modules, whereas the duty cycle is independently controlled.

Important: The Timer2 postscaler is not used in the determination of the PWM frequency. The postscaler might be used to have a servo update rate at a different frequency than the PWM output.

All PWM outputs associated with Timer2 are set when T2TMR is cleared. Each PWMx is cleared when T2TMR is equal to the value specified in the corresponding PWMxDCH (8 MSb) and PWMxDCL[7:6] (2 LSb) registers. When the value is greater than or equal to T2PR, the PWM output is never cleared (100% duty cycle).

Important: The PWMxDCH and PWMxDCL registers are double-buffered. The buffers are updated when T2TMR matches T2PR. Care has to be taken to update both registers before the timer match occurs.

23.2 PWM Output Polarity

The output polarity is inverted by setting the POL bit.

23.3 PWM Period

The PWM period is specified by the T2PR register. The PWM period can be calculated using the formula of Equation 23-1. It is required to have $F_{OSC}/4$ as the selected clock input to the timer for correct PWM operation.

Equation 23-1. PWM Period

$$PWM\ Period = [(T2PR) + 1] \bullet 4 \bullet Tosc \bullet (TMR2\ \ Prescale\ Value)$$

Note: $T_{OSC} = 1/F_{OSC}$

When T2TMR is equal to T2PR, the following three events occur on the next increment cycle:

- T2TMR is cleared

- The PWM output is active (Exception: When the PWM duty cycle = 0%, the PWM output will remain inactive)
- The PWMxDCH and PWMxDCL register values are latched into the buffers

Important: The Timer2 postscaler has no effect on the PWM operation.

23.4 PWM Duty Cycle

The PWM duty cycle is specified by writing a 10-bit value to the PWMxDCH and PWMxDCL register pair. The PWMxDCH register contains the eight MSbs and the two LSbs, PWMxDCL[7:6]. The PWMxDCH and PWMxDCL registers can be written to at any time.

The equations below are used to calculate the PWM pulse width and the PWM duty cycle ratio.

Equation 23-2. Pulse Width

$$Pulse\ Width = (PWMxDCH{:}PWMxDCL[7{:}6]) \bullet Tosc \bullet (TMR2\ \mathrm{Prescale}\ Value)$$

Note: $T_{OSC} = 1/F_{OSC}$

Equation 23-3. Duty Cycle Ratio

$$DutyCycleRatio = \frac{(PWMxDCH{:}PWMxDCL[7{:}6])}{4(T2PR+1)}$$

The 8-bit timer T2TMR register is concatenated with the two Least Significant bits of $1/F_{OSC}$, adjusted by the Timer2 prescaler to create the 10-bit time base. The system clock is used if the Timer2 prescaler is set to 1:1.

23.5 PWM Resolution

The resolution determines the number of available duty cycles for a given period. For example, a 10-bit resolution will result in 1024 discrete duty cycles, whereas an 8-bit resolution will result in 256 discrete duty cycles.

The maximum PWM resolution is 10 bits when T2PR is 255. The resolution is a function of the T2PR register value as shown below.

Equation 23-4. PWM Resolution

$$Resolution = \frac{\log[4(T2PR+1)]}{\log(2)} bits$$

Important: If the pulse-width value is greater than the period, the assigned PWM pin(s) will remain unchanged.

Table 23-1. Example PWM Frequencies and Resolutions (F_{OSC} = 20 MHz)

PWM Frequency	0.31 kHz	4.88 kHz	19.53 kHz	78.12 kHz	156.3 kHz	208.3 kHz
Timer Prescale	64	4	1	1	1	1
T2PR Value	0xFF	0xFF	0xFF	0x3F	0x1F	0x17
Maximum Resolution (bits)	10	10	10	8	7	6.6

Table 23-2. Example PWM Frequencies and Resolutions (F_{OSC} = 8 MHz)

PWM Frequency	0.31 kHz	4.90 kHz	19.61 kHz	76.92 kHz	153.85 kHz	200.0 kHz
Timer Prescale	64	4	1	1	1	1
T2PR Value	0x65	0x65	0x65	0x19	0x0C	0x09
Maximum Resolution (bits)	8	8	8	6	5	5

23.6 Operation in Sleep Mode

In Sleep mode, the T2TMR register will not increment and the state of the module will not change. If the PWMx pin is driving a value, it will continue to drive that value. When the device wakes up, T2TMR will continue from its previous state.

23.7 Changes in System Clock Frequency

The PWM frequency is derived from the system clock frequency (F_{OSC}). Any changes in the system clock frequency will result in changes to the PWM frequency.

23.8 Effects of Reset

Any Reset will force all ports to Input mode and the PWM registers to their Reset states.

23.9 Setup for PWM Operation Using PWMx Output Pins

Follow the next steps when configuring the module for PWM operation using the PWMx pins:

1. Disable the PWMx pin output driver(s) by setting the associated TRIS bit(s).
2. Clear the PWMxCON register.
3. Load the T2PR register with the PWM period value.
4. Load the PWMxDCH register and bits [7:6] of the PWMxDCL register with the PWM duty cycle value.
5. Configure and start Timer2:
   - Clear the TMR2IF Interrupt Flag bit of the PIRx register.(1)
   - Select the timer clock source to be as $F_{OSC}/4$ using the T2CLKCON register. This is required for correct operation of the PWM module.
   - Configure the CKPS bits of the T2CON register with the Timer2 prescale value.
   - Enable Timer2 by setting the ON bit of the T2CON register.
6. Enable the PWM output pin and wait until Timer2 overflows; the TMR2IF bit of the PIRx register is set.(2)
7. Enable the PWMx pin output driver(s) by clearing the associated TRIS bit(s) and setting the desired pin PPS control bits.
8. Configure the PWM module by loading the PWMxCON register with the appropriate values.

Notes:

1. To send a complete duty cycle and period on the first PWM output, the above steps must be followed in the given order. If it is not critical to start with a complete PWM signal, then move step 8 to replace step 4.
2. For operation with other peripherals only, disable PWMx pin outputs.

23.9.1 PWMx Pin Configuration

All PWM outputs are multiplexed with the PORT data latch. The user must configure the pins as outputs by clearing the associated TRIS bits.

23.10 Setup for PWM Operation to Other Device Peripherals

Follow the next steps when configuring the module for PWM operation to be used by other device peripherals:

1. Disable the PWMx pin output driver(s) by setting the associated TRIS bit(s).
2. Clear the PWMxCON register.
3. Load the T2PR register with the PWM period value.
4. Load the PWMxDCH register and bits [7:6] of the PWMxDCL register with the PWM duty cycle value.
5. Configure and start Timer2:
   - Clear the TMR2IF Interrupt Flag bit of the PIRx register.(1)
   - Select the timer clock source to be as $F_{OSC}/4$ using the T2CLKCON register. This is required for correct operation of the PWM module.
   - Configure the CKPS bits of the T2CON register with the Timer2 prescale value.
   - Enable Timer2 by setting the ON bit of the T2CON register.
6. Wait until Timer2 overflows; the TMR2IF bit of the PIRx register is set.(1)
7. Configure the PWM module by loading the PWMxCON register with the appropriate values.

Note:

1. To send a complete duty cycle and period on the first PWM output, the above steps must be included in the setup sequence. If it is not critical to start with a complete PWM signal on the first output, then step 6 may be ignored.

23.11 Register Definitions: PWM Control

Long bit name prefixes for the PWM peripherals are shown in the table below. Refer to the “**Long Bit Names**” section for more information.

Table 23-3. PWM Bit Name Prefixes

Peripheral	Bit Name Prefix
PWM3	PWM3
PWM4	PWM4

23.11.1 PWMxCON

Name: PWMxCON
Offset: 0x316,0x31A

PWM Control Register

Bit	7	6	5	4	3	2	1	0
	EN		OUT	POL				
Access	R/W		R	R/W				
Reset	0		0	0				

Bit 7 – EN PWM Module Enable bit

Value	Description
1	PWM module is enabled
0	PWM module is disabled

Bit 5 – OUT PWM Module Output Level
Indicates PWM module output level when bit is read

Bit 4 – POL PWM Output Polarity Select bit

Value	Description
1	PWM output is inverted
0	PWM output is normal

23.11.2 PWMxDC

Name: PWMxDC
Offset: 0x314,0x318

PWM Duty Cycle Register

Bit	15	14	13	12	11	10	9	8
	DCH[7:0]							
Access								
Reset	x	x	x	x	x	x	x	x

Bit	7	6	5	4	3	2	1	0
	DCL[1:0]							
Access								
Reset	x	x						

Bits 15:8 – DCH[7:0] PWM Duty Cycle Most Significant bits
These bits are the MSbs of the PWM duty cycle.
Reset States: POR/BOR = xxxxxxxx
All Other Resets = uuuuuuuu

Bits 7:6 – DCL[1:0] PWM Duty Cycle Least Significant bits
These bits are the LSbs of the PWM duty cycle.
Reset States: POR/BOR = xx
All Other Resets = uu

23.12 Register Summary - PWM

Offset	Name	Bit Pos.	7	6	5	4	3	2	1	0
0x00 ... 0x0313	Reserved									
0x0314	PWM3DC	7:0	DCL[1:0]							
		15:8	DCH[7:0]							
0x0316	PWM3CON	7:0	EN		OUT	POL				
0x0317	Reserved									
0x0318	PWM4DC	7:0	DCL[1:0]							
		15:8	DCH[7:0]							
0x031A	PWM4CON	7:0	EN		OUT	POL				

24. EUSART - Enhanced Universal Synchronous Asynchronous Receiver Transmitter

The Enhanced Universal Synchronous Asynchronous Receiver Transmitter (EUSART) module is a serial I/O communications peripheral. It contains all the clock generators, shift registers and data buffers necessary to perform an input or output serial data transfer independent of device program execution. The EUSART, also known as a Serial Communications Interface (SCI), can be configured as a full-duplex asynchronous system or half-duplex synchronous system.

Full Duplex mode is useful for communications with peripheral systems, such as CRT terminals and personal computers. Half Duplex Synchronous mode is intended for communications with peripheral devices, such as A/D or D/A integrated circuits, serial EEPROMs or other microcontrollers. These devices typically do not have internal clocks for baud rate generation and require the external clock signal provided by a host synchronous device.

The EUSART module includes the following capabilities:

- Full-duplex asynchronous transmit and receive
- Two-character input buffer
- One-character output buffer
- Programmable 8-bit or 9-bit character length
- Address detection in 9-bit mode
- Input buffer overrun error detection
- Received character framing error detection
- Half-duplex synchronous host
- Half-duplex synchronous client
- Programmable clock polarity in Synchronous modes
- Sleep operation

The EUSART module implements the following additional features, making it ideally suited for use in Local Interconnect Network (LIN) bus systems:

- Automatic detection and calibration of the baud rate
- Wake-up on Break reception
- 13-bit Break character transmit

Block diagrams of the EUSART transmitter and receiver are shown in Figure 24-1 and Figure 24-2.

The operation of the EUSART module consists of six registers:

- Transmit Status and Control (TXxSTA)
- Receive Status and Control (RCxSTA)
- Baud Rate Control (BAUDxCON)
- Baud Rate Value (SPxBRG)
- Receive Data Register (RCxREG)
- Transmit Data Register (TXxREG)

The RXx/DTx and TXx/CKx input pins are selected with the RXxPPS and TXxPPS registers, respectively. TXx, CKx, and DTx output pins are selected with each pin's RxyPPS register. Since the RX input is coupled with the DT output in Synchronous mode, it is the user's responsibility to select the same pin for both of these functions when operating in Synchronous mode. The EUSART control logic will control the data direction drivers automatically.

Figure 24-1. EUSART Transmit Block Diagram

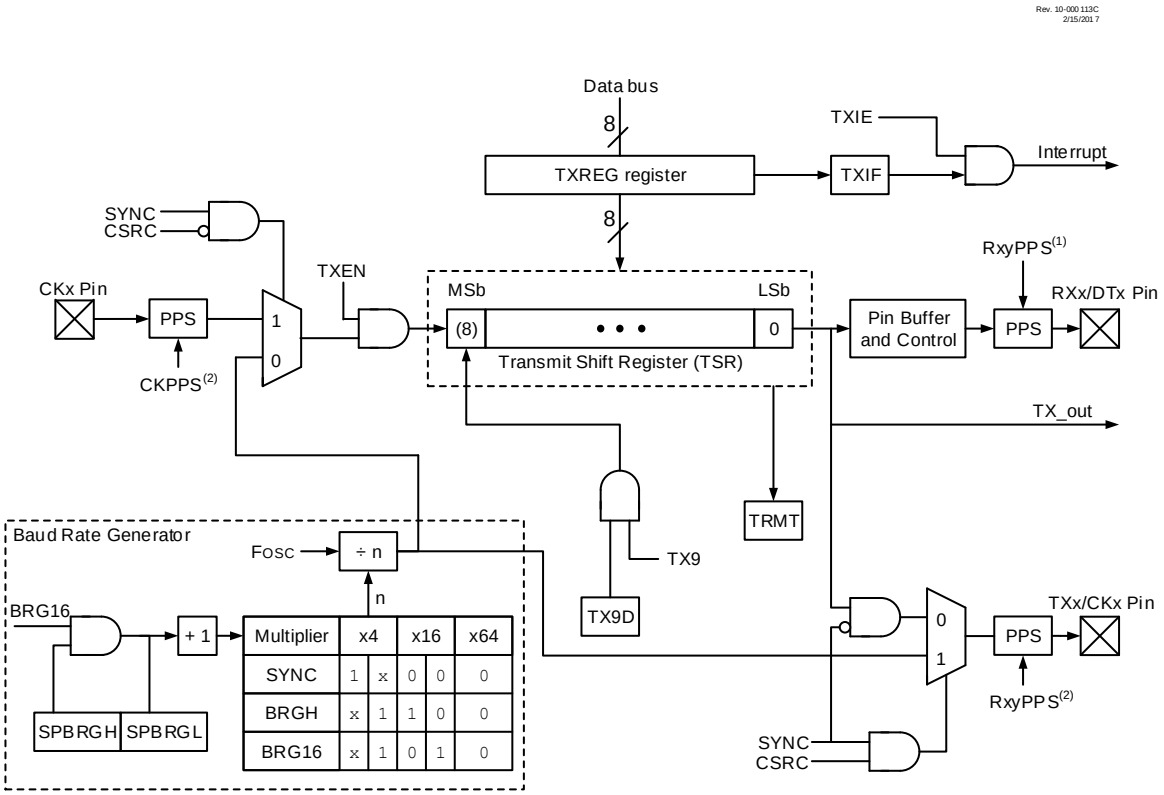

Multiplier	x4		x16		x64
SYNC	1	x	0	0	0
BRGH	x	1	1	0	0
BRG16	x	1	0	1	0

Notes: 1. In Synchronous mode, the DT output and RX input PPS selections will enable the same pin.
2. In Host Synchronous mode, the TX output and CK input PPS selections will enable the same pin.

Figure 24-2. EUSART Receive Block Diagram

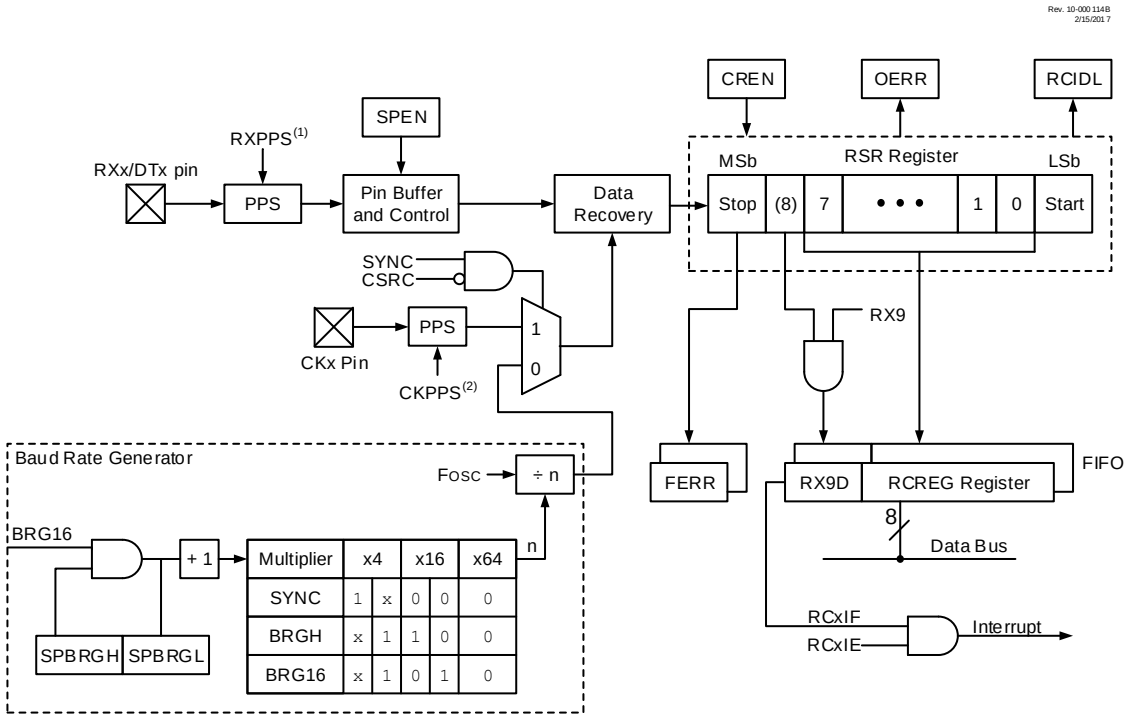

Notes: 1. In Synchronous mode, the DT output and RX input PPS selections will enable the same pin.
2. In Host Synchronous mode, the TX output and CK input PPS selections will enable the same pin.

24.1 EUSART Asynchronous Mode

The EUSART transmits and receives data using the standard non-return-to-zero (NRZ) format. NRZ is implemented with two levels: a V_{OH} Mark state which represents a '1' data bit, and a V_{OL} Space state which represents a '0' data bit. NRZ refers to the fact that consecutively transmitted data bits of the same value stay at the output level of that bit without returning to a neutral level between each bit transmission. An NRZ transmission port idles in the Mark state. Each character transmission consists of one Start bit followed by eight or nine data bits and is always terminated by one or more Stop bits. The Start bit is always a space and the Stop bits are always marks. The most common data format is eight bits. Each transmitted bit persists for a period of 1/(Baud Rate). An on-chip dedicated 8-bit/16-bit Baud Rate Generator is used to derive standard baud rate frequencies from the system oscillator. See Table 24-2 for examples of baud rate configurations.

The EUSART transmits and receives the LSb first. The EUSART's transmitter and receiver are functionally independent, but share the same data format and baud rate. Parity is not supported by the hardware, but can be implemented in software and stored as the ninth data bit.

24.1.1 EUSART Asynchronous Transmitter

Figure 24-1 is a simplified representation of the transmitter. The heart of the transmitter is the serial Transmit Shift Register (TSR), which is not directly accessible by software. The TSR obtains its data from the transmit buffer, which is the TXxREG register.

24.1.1.1 Enabling the Transmitter

The EUSART transmitter is enabled for asynchronous operations by configuring the following three control bits:

- The Transmit Enable (TXEN) bit is set to '1' to enable the transmitter circuitry of the EUSART
- The EUSART Mode Select (SYNC) bit is set to '0' to configure the EUSART for asynchronous operation

- The Serial Port Enable (SPEN) bit is set to '1' to enable the EUSART interface and to enable automatically the output drivers for the RxyPPS selected as the TXx/CKx output

All other EUSART control bits are assumed to be in their default state.

If the TXx/CKx pin is shared with an analog peripheral, the analog I/O function must be disabled by clearing the corresponding ANSEL bit.

Important: The TXxIF Transmitter Interrupt Flag in the PIRx register is set when the TXEN enable bit is set and the Transmit Shift Register (TSR) is Idle.

24.1.1.2 Transmitting Data

A transmission is initiated by writing a character to the TXxREG register. If this is the first character, or the previous character has been completely flushed from the TSR, the data in the TXxREG is immediately transferred to the TSR register. If the TSR still contains all or part of a previous character, the new character data is held in the TXxREG until the Stop bit of the previous character has been transmitted. The pending character in the TXxREG is then transferred to the TSR in one T_{CY} immediately following the Stop bit transmission. The transmission of the Start bit, data bits and Stop bit sequence commences immediately following the transfer of the data to the TSR from the TXxREG.

24.1.1.3 Transmit Data Polarity

The polarity of the transmit data can be controlled with the Clock/Transmit Polarity Select (SCKP) bit. The default state of this bit is '0', which selects high true transmit Idle and data bits. Setting the SCKP bit to '1' will invert the transmit data resulting in low true Idle and data bits. The SCKP bit controls transmit data polarity in Asynchronous mode only. In Synchronous mode, the SCKP bit has a different function. See 24.4.1.2. Clock Polarity for more details.

24.1.1.4 Transmit Interrupt Flag

The EUSART Transmit Interrupt Flag (TXxIF) bit of the PIRx register is set whenever the EUSART transmitter is enabled and no character is being held for transmission in the TXxREG. In other words, the TXxIF bit is only cleared when the TSR is busy with a character and a new character has been queued for transmission in the TXxREG. The TXxIF flag bit is not cleared immediately upon writing TXxREG. TXxIF becomes valid in the second instruction cycle following the write execution. Polling TXxIF immediately following the TXxREG write will return invalid results. The TXxIF bit is read-only, it cannot be set or cleared by software.

The TXxIF interrupt can be enabled by setting the EUSART Transmit Interrupt Enable (TXxIE) bit of the PIEx register. However, the TXxIF flag bit will be set whenever the TXxREG is empty, regardless of the state of TXxIE enable bit.

To use interrupts when transmitting data, set the TXxIE bit only when there is more data to send. Clear the TXxIE interrupt enable bit upon writing the last character of the transmission to the TXxREG.

24.1.1.5 TSR Status

The Transmit Shift Register Status (TRMT) bit indicates the status of the TSR register. This is a read-only bit. The TRMT bit is set when the TSR register is empty and is cleared when a character is transferred to the TSR register from the TXxREG. The TRMT bit remains clear until all bits have been shifted out of the TSR register. No interrupt logic is tied to this bit, so the user needs to poll this bit to determine the TSR status.

Important: The TSR register is not mapped in data memory, so it is not available to the user.

24.1.1.6 Transmitting 9-Bit Characters

The EUSART supports 9-bit character transmissions. When the 9-Bit Transmit Enable (TX9) bit is set, the EUSART will shift nine bits out for each character transmitted. The TX9D bit is the ninth and Most Significant data bit. When transmitting 9-bit data, the TX9D data bit must be written before writing the eight Least Significant bits into the TXxREG. All nine bits of data will be transferred to the TSR register immediately after the TXxREG is written.

A special 9-bit Address mode is available for use with multiple receivers. See 24.1.2.7. Address Detection for more information on the Address mode.

24.1.1.7 Asynchronous Transmission Setup

1. Initialize the SPxBRGH:SPxBRGL register pair and the BRGH and BRG16 bits to achieve the desired baud rate (see 24.3. EUSART Baud Rate Generator (BRG)).
2. Select the transmit output pin by writing the appropriate value to the RxyPPS register.
3. Enable the asynchronous serial port by clearing the SYNC bit and setting the SPEN bit.
4. If 9-bit transmission is desired, set the TX9 control bit. That will indicate that the eight Least Significant data bits are an address when the receiver is set for address detection.
5. Set SCKP bit if inverted transmit is desired.
6. Enable the transmission by setting the TXEN control bit. This will cause the TXxIF interrupt bit to be set.
7. If interrupts are desired, set the TXxIE interrupt enable bit of the PIEx register.
8. An interrupt will occur immediately provided that the GIE and PEIE bits of the INTCON register are also set.
9. If 9-bit transmission is selected, the ninth bit will be loaded into the TX9D data bit.
10. Load 8-bit data into the TXxREG register. This will start the transmission.

Figure 24-3. Asynchronous Transmission

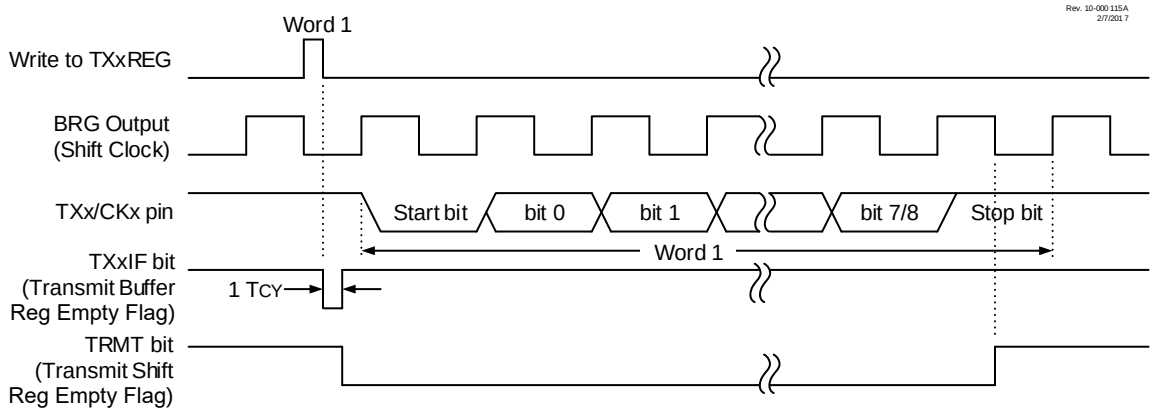

Figure 24-4. Asynchronous Transmission (Back-to-Back)

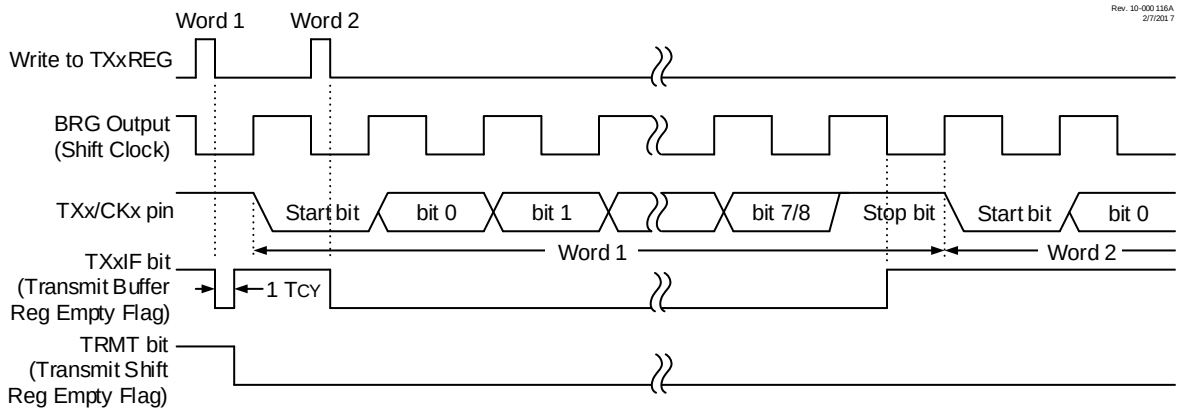

24.1.2 EUSART Asynchronous Receiver

The Asynchronous mode is typically used in RS-232 systems. A simplified representation of the receiver is shown in Figure 24-2. The data is received on the RXx/DTx pin and drives the data recovery block. The data recovery block is actually a high-speed shifter operating at 16 times the baud rate, whereas the serial Receive Shift Register (RSR) operates at the bit rate. When all eight or nine bits of the character have been shifted in, they are immediately transferred to a two character First-In-First-Out (FIFO) memory. The FIFO buffering allows reception of two complete

characters and the start of a third character before software must start servicing the EUSART receiver. The FIFO and RSR registers are not directly accessible by software. Access to the received data is via the RCxREG register.

24.1.2.1 Enabling the Receiver

The EUSART receiver is enabled for asynchronous operation by configuring the following three control bits:

- The Continuous Receive Enable (CREN) bit is set to '1' to enables the receiver circuitry of the EUSART
- The EUSART Mode Select (SYNC) bit is set to '0' to configure the EUSART for asynchronous operation
- The Serial Port Enable (SPEN) bit is set to '1' to enable the EUSART interface

All other EUSART control bits are assumed to be in their default state.

The user must set the RXxPPS register to select the RXx/DTx I/O pin and set the corresponding TRIS bit to configure the pin as an input.

Important: If the RX/DT function is on an analog pin, the corresponding ANSEL bit must be cleared for the receiver to function.

24.1.2.2 Receiving Data

The receiver data recovery circuit initiates character reception on the falling edge of the first bit. The first bit, also known as the Start bit, is always a zero. The data recovery circuit counts one-half bit time to the center of the Start bit and verifies that the bit is still a zero. If it is not a zero, then the data recovery circuit aborts character reception without generating an error, and resumes looking for the falling edge of the Start bit. If the Start bit zero verification succeeds, then the data recovery circuit counts a full bit time to the center of the next bit. The bit is then sampled by a majority detect circuit and the resulting '0' or '1' is shifted into the RSR. This repeats until all data bits have been sampled and shifted into the RSR. One final bit time is measured and the level sampled. This is the Stop bit, which is always a '1'. If the data recovery circuit samples a '0' in the Stop bit position, then a framing error is set for this character, otherwise the framing error is cleared for this character. See 24.1.2.4. Receive Framing Error for more information on framing errors.

Immediately after all data bits and the Stop bit have been received, the character in the RSR is transferred to the EUSART receive FIFO, and the EUSART Receive Interrupt Flag (RCxIF) bit of the PIRx register is set. The top character in the FIFO is transferred out of the FIFO by reading the RCxREG register.

Important: If the receive FIFO is overrun, no additional characters will be received until the Overrun condition is cleared. See 24.1.2.4. Receive Framing Error for more information.

24.1.2.3 Receive Interrupts

The EUSART Receive Interrupt Flag (RCxIF) bit of the PIRx register is set whenever the EUSART receiver is enabled and there is an unread character in the receive FIFO. The RCxIF Interrupt Flag bit is read-only, it cannot be set or cleared by software.

RCxIF interrupts are enabled by setting all of the following bits:

- RCxIE, Interrupt Enable bit of the PIEx register
- PEIE, Peripheral Interrupt Enable bit of the INTCON register
- GIE, Global Interrupt Enable bit of the INTCON register

The RCxIF Interrupt Flag bit will be set when there is an unread character in the FIFO, regardless of the state of interrupt enable bits.

24.1.2.4 Receive Framing Error

Each character in the receive FIFO buffer has a corresponding framing error Status bit. A framing error indicates that a Stop bit was not seen at the expected time. The framing error status is accessed via the Framing Error (FERR) bit. The FERR bit represents the status of the top unread character in the receive FIFO. Therefore, the FERR bit must be read before reading the RCxREG register.

The FERR bit is read-only and only applies to the top unread character in the receive FIFO. A framing error (FERR = 1) does not preclude reception of additional characters. It is not necessary to clear the FERR bit. Reading the next character from the FIFO buffer will advance the FIFO to the next character and the next corresponding framing error.

The FERR bit can be forced clear by clearing the SPEN bit, which resets the EUSART. Clearing the CREN bit does not affect the FERR bit. A framing error by itself does not generate an interrupt.

Important: If all receive characters in the receive FIFO have framing errors, repeated reads of the RCxREG register will not clear the FERR bit.

24.1.2.5 Receive Overrun Error

The receive FIFO buffer can hold two characters. An overrun error will be generated if a third character, in its entirety, is received before the FIFO is accessed. When this happens the Overrun Error (OERR) bit is set. The characters already in the FIFO buffer can be read but no additional characters will be received until the error is cleared. The error must be cleared by either clearing the CREN bit or by resetting the EUSART by clearing the SPEN bit.

24.1.2.6 Receiving 9-Bit Characters

The EUSART supports 9-bit character reception. When the 9-Bit Receive Enable (RX9) bit is set, the EUSART will shift nine bits into the RSR for each character received. The RX9D bit is the ninth and Most Significant data bit of the top unread character in the receive FIFO. When reading 9-bit data from the receive FIFO buffer, the RX9D data bit must be read before reading the eight Least Significant bits from the RCxREG register.

24.1.2.7 Address Detection

A special Address Detection mode is available for use when multiple receivers share the same transmission line, such as in RS-485 systems. Address detection is enabled by setting the Address Detect Enable (ADDEN) bit.

Address detection requires 9-bit character reception. When address detection is enabled, only characters with the ninth data bit set will be transferred to the receive FIFO buffer, thereby setting the RCxIF interrupt bit. All other characters will be ignored.

Upon receiving an address character, user software determines if the address matches its own. Upon address match, user software must disable address detection by clearing the ADDEN bit before the next Stop bit occurs. When user software detects the end of the message, determined by the message protocol used, software places the receiver back into the Address Detection mode by setting the ADDEN bit.

24.1.2.8 Asynchronous Reception Setup

1. Initialize the SPxBRGH:SPxBRGL register pair and the BRGH and BRG16 bits to achieve the desired baud rate (see 24.3. EUSART Baud Rate Generator (BRG)).
2. Set the RXxPPS register to select the RXx/DTx input pin.
3. Clear the ANSEL bit for the RXx pin (if applicable).
4. Enable the serial port by setting the SPEN bit. The SYNC bit must be cleared for asynchronous operation.
5. If interrupts are desired, set the RCxIE bit of the PIEx register and the GIE and PEIE bits of the INTCON register.
6. If 9-bit reception is desired, set the RX9 bit.
7. Enable reception by setting the CREN bit.
8. The RCxIF Interrupt Flag bit will be set when a character is transferred from the RSR to the receive buffer. An interrupt will be generated if the RCxIE interrupt enable bit was also set.
9. Read the RCxSTA register to get the Error flags and, if 9-bit data reception is enabled, the ninth data bit.
10. Get the received eight Least Significant data bits from the receive buffer by reading the RCxREG register.
11. If an overrun occurred, clear the OERR flag by clearing the CREN receiver enable bit.

24.1.2.9 9-Bit Address Detection Mode Setup

This mode is typically used in RS-485 systems. To set up an Asynchronous Reception with Address Detect Enable, follow these steps:

1. Initialize the SPxBRGH:SPxBRGL register pair and the BRGH and BRG16 bits to achieve the desired baud rate (see 24.3. EUSART Baud Rate Generator (BRG)).

2. Set the RXxPPS register to select the RXx input pin.
3. Clear the ANSEL bit for the RXx pin (if applicable).
4. Enable the serial port by setting the SPEN bit. The SYNC bit must be cleared for asynchronous operation.
5. If interrupts are desired, set the RCxIE bit of the PIEx register and the GIE and PEIE bits of the INTCON register.
6. Enable 9-bit reception by setting the RX9 bit.
7. Enable address detection by setting the ADDEN bit.
8. Enable reception by setting the CREN bit.
9. The RCxIF Interrupt Flag bit will be set when a character with the ninth bit set is transferred from the RSR to the receive buffer. An interrupt will be generated if the RCxIE interrupt enable bit is also set.
10. Read the RCxSTA register to get the Error flags. The ninth data bit will always be set.
11. Get the received eight Least Significant data bits from the receive buffer by reading the RCxREG register. Software determines if this is the device's address.
12. If an overrun occurred, clear the OERR flag by clearing the CREN receiver enable bit.
13. If the device has been addressed, clear the ADDEN bit to allow all received data into the receive buffer and generate interrupts.

Figure 24-5. Asynchronous Reception

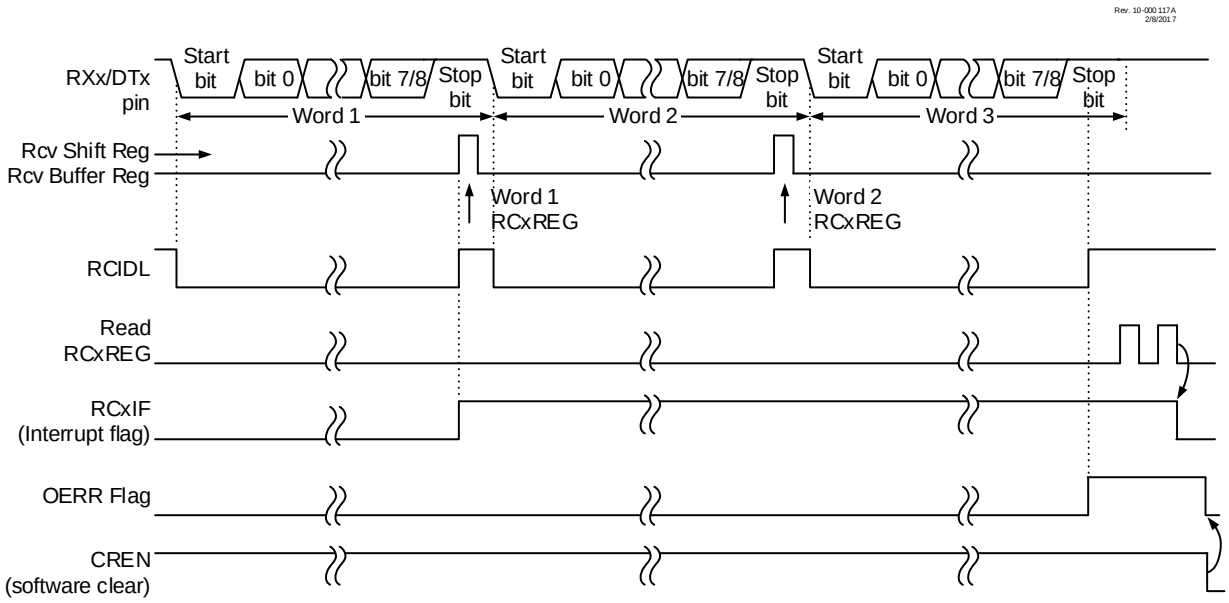

Note: This timing diagram shows three bytes appearing on the RXx input. The OERR flag is set because the RCxREG register is not read before the third word is received.

24.2 Clock Accuracy with Asynchronous Operation

The factory calibrates the internal oscillator block output (INTOSC). However, the INTOSC frequency may drift as V_{DD} or temperature changes, and this directly affects the asynchronous baud rate. Two methods may be used to adjust the baud rate clock, but both require a reference clock source of some kind.

The first (preferred) method uses the OSCTUNE register to adjust the INTOSC output. Adjusting the value in the OSCTUNE register allows for fine resolution changes to the system clock source.

The other method adjusts the value in the Baud Rate Generator. This can be done automatically with the Auto-Baud Detect feature (see 24.3.1. Auto-Baud Detect). There may not be fine enough resolution when adjusting the Baud Rate Generator to compensate for a gradual change in the peripheral clock frequency.

24.3 EUSART Baud Rate Generator (BRG)

The Baud Rate Generator (BRG) is an 8-bit or 16-bit timer that is dedicated to the support of both the asynchronous and synchronous EUSART operation. By default, the BRG operates in 8-bit mode. Setting the BRG16 bit selects 16-bit mode.

The SPxBRGH:SPxBRGL register pair determines the period of the free-running baud rate timer. In Asynchronous mode the multiplier of the baud rate period is determined by both the BRGH and the BRG16 bits. In Synchronous mode, the BRGH bit is ignored.

The Baud Rate Formulas table below contains the formulas for determining the baud rate. The Calculating Baud Rate Error equation below provides a sample calculation for determining the baud rate and baud rate error.

Typical baud rates and error values for various Asynchronous modes have been computed and are shown in the table below. It may be advantageous to use the high baud rate (BRGH = 1), or the 16-bit BRG (BRG16 = 1) to reduce the baud rate error. The 16-bit BRG mode is used to achieve slow baud rates for fast oscillator frequencies. The BRGH bit is used to achieve very high baud rates.

Writing a new value to the SPxBRGH:SPxBRGL register pair causes the BRG timer to be reset (or cleared). This ensures that the BRG does not wait for a timer overflow before outputting the new baud rate.

If the system clock is changed during an active receive operation, a receive error or data loss may result. To avoid this problem, check the status of the Receive Idle Flag (RCIDL) bit to make sure that the receive operation is Idle before changing the system clock.

Equation 24-1. Calculating Baud Rate Error

For a device with F_{OSC} of 16 MHz, desired baud rate of 9600, Asynchronous mode, 8-bit BRG:

$$DesiredBaudrate = \frac{F_{OSC}}{64 \times (SPxBRG + 1)}$$

Solving for SPxBRG:

$$SPxBRG = \frac{F_{OSC}}{64 \times DesiredBaudrate} - 1$$

$$SPxBRG = \frac{16000000}{64 \times 9600} - 1$$

$$SPxBRG = 25.042 \simeq 25$$

$$CalculatedBaudrate = \frac{16000000}{64 \times (25 + 1)}$$

$$CalculatedBaudrate = 9615$$

$$Error = \frac{CalculatedBaudrate - DesiredBaudrate}{DesiredBaudrate}$$

$$Error = \frac{9615 - 9600}{9600}$$

$$Error = 0.16\,\%$$

Table 24-1. Baud Rate Formulas

Configuration Bits			BRG/EUSART Mode	Baud Rate Formula
SYNC	BRG16	BRGH		
0	0	0	8-bit/Asynchronous	F_{OSC}/[64 (n+1)]
0	0	1	8-bit/Asynchronous	F_{OSC}/[16 (n+1)]
0	1	0	16-bit/Asynchronous	

.....continued

Configuration Bits			BRG/EUSART Mode	Baud Rate Formula
SYNC	BRG16	BRGH		
0	1	1	16-bit/Asynchronous	$F_{OSC}/[4\ (n+1)]$
1	0	x	8-bit/Synchronous	
1	1	x	16-bit/Synchronous	

Note: x = Don't care, n = value of SPxBRGH:SPxBRGL register pair.

Table 24-2. Sample Baud Rates for Asynchronous Modes

BAUD RATE	SYNC = 0, BRGH = 0, BRG16 = 0											
	F_{OSC} = 32.000 MHz			F_{OSC} = 20.000 MHz			F_{OSC} = 18.432 MHz			F_{OSC} = 11.0592 MHz		
	Actual Rate	% Error	SPBRG value (decimal)	Actual Rate	% Error	SPBRG value (decimal)	Actual Rate	% Error	SPBRG value (decimal)	Actual Rate	% Error	SPBRG value (decimal)
300	—	—	—	—	—	—	—	—	—	—	—	—
1200	—	—	—	1221	1.73	255	1200	0.00	239	1200	0.00	143
2400	2404	0.16	207	2404	0.16	129	2400	0.00	119	2400	0.00	71
9600	9615	0.16	51	9470	-1.36	32	9600	0.00	29	9600	0.00	17
10417	10417	0.00	47	10417	0.00	29	10286	-1.26	27	10165	-2.42	16
19.2k	19.23k	0.16	25	19.53k	1.73	15	19.20k	0.00	14	19.20k	0.00	8
57.6k	55.55k	-3.55	3	—	—	—	57.60k	0.00	7	57.60k	0.00	2
115.2k	—	—	—	—	—	—	—	—	—	—	—	—

BAUD RATE	SYNC = 0, BRGH = 0, BRG16 = 0											
	F_{OSC} = 8.000 MHz			F_{OSC} = 4.000 MHz			F_{OSC} = 3.6864 MHz			F_{OSC} = 1.000 MHz		
	Actual Rate	% Error	SPBRG value (decimal)	Actual Rate	% Error	SPBRG value (decimal)	Actual Rate	% Error	SPBRG value (decimal)	Actual Rate	% Error	SPBRG value (decimal)
300	—	—	—	300	0.16	207	300	0.00	191	300	0.16	51
1200	1202	0.16	103	1202	0.16	51	1200	0.00	47	1202	0.16	12
2400	2404	0.16	51	2404	0.16	25	2400	0.00	23	—	—	—
9600	9615	0.16	12	—	—	—	9600	0.00	5	—	—	—
10417	10417	0.00	11	10417	0.00	5	—	—	—	—	—	—
19.2k	—	—	—	—	—	—	19.20k	0.00	2	—	—	—
57.6k	—	—	—	—	—	—	57.60k	0.00	0	—	—	—
115.2k	—	—	—	—	—	—	—	—	—	—	—	—

BAUD RATE	SYNC = 0, BRGH = 1, BRG16 = 0											
	F_{OSC} = 32.000 MHz			F_{OSC} = 20.000 MHz			F_{OSC} = 18.432 MHz			F_{OSC} = 11.0592 MHz		
	Actual Rate	% Error	SPBRG value (decimal)	Actual Rate	% Error	SPBRG value (decimal)	Actual Rate	% Error	SPBRG value (decimal)	Actual Rate	% Error	SPBRG value (decimal)
300	—	—	—	—	—	—	—	—	—	—	—	—
1200	—	—	—	—	—	—	—	—	—	—	—	—
2400	—	—	—	—	—	—	—	—	—	—	—	—
9600	9615	0.16	207	9615	0.16	129	9600	0.00	119	9600	0.00	71
10417	10417	0.00	191	10417	0.00	119	10378	-0.37	110	10473	0.53	65
19.2k	19.23k	0.16	103	19.23k	0.16	64	19.20k	0.00	59	19.20k	0.00	35
57.6k	57.14k	-0.79	34	56.82k	-1.36	21	57.60k	0.00	19	57.60k	0.00	11
115.2k	117.64k	2.12	16	113.64k	-1.36	10	115.2k	0.00	9	115.2k	0.00	5

BAUD RATE	SYNC = 0, BRGH = 1, BRG16 = 0											
	F_{OSC} = 8.000 MHz			F_{OSC} = 4.000 MHz			F_{OSC} = 3.6864 MHz			F_{OSC} = 1.000 MHz		
	Actual Rate	% Error	SPBRG value (decimal)	Actual Rate	% Error	SPBRG value (decimal)	Actual Rate	% Error	SPBRG value (decimal)	Actual Rate	% Error	SPBRG value (decimal)
300	—	—	—	—	—	—	—	—	—	300	0.16	207
1200	—	—	—	1202	0.16	207	1200	0.00	191	1202	0.16	51
2400	2404	0.16	207	2404	0.16	103	2400	0.00	95	2404	0.16	25
9600	9615	0.16	51	9615	0.16	25	9600	0.00	23	—	—	—
10417	10417	0.00	47	10417	0.00	23	10473	0.53	21	10417	0.00	5
19.2k	19231	0.16	25	19.23k	0.16	12	19.2k	0.00	11	—	—	—
57.6k	55556	-3.55	8	—	—	—	57.60k	0.00	3	—	—	—
115.2k	—	—	—	—	—	—	115.2k	0.00	1	—	—	—

BAUD RATE	SYNC = 0, BRGH = 0, BRG16 = 1											
	F_{OSC} = 32.000 MHz			F_{OSC} = 20.000 MHz			F_{OSC} = 18.432 MHz			F_{OSC} = 11.0592 MHz		
	Actual Rate	% Error	SPBRG value (decimal)	Actual Rate	% Error	SPBRG value (decimal)	Actual Rate	% Error	SPBRG value (decimal)	Actual Rate	% Error	SPBRG value (decimal)
300	300.0	0.00	6666	300.0	-0.01	4166	300.0	0.00	3839	300.0	0.00	2303
1200	1200	-0.02	3332	1200	-0.03	1041	1200	0.00	959	1200	0.00	575
2400	2401	-0.04	832	2399	-0.03	520	2400	0.00	479	2400	0.00	287
9600	9615	0.16	207	9615	0.16	129	9600	0.00	119	9600	0.00	71
10417	10417	0.00	191	10417	0.00	119	10378	-0.37	110	10473	0.53	65
19.2k	19.23k	0.16	103	19.23k	0.16	64	19.20k	0.00	59	19.20k	0.00	35

57.6k	57.14k	-0.79	34	56.818	-1.36	21	57.60k	0.00	19	57.60k	0.00	11
115.2k	117.6k	2.12	16	113.636	-1.36	10	115.2k	0.00	9	115.2k	0.00	5

BAUD RATE	SYNC = 0, BRGH = 0, BRG16 = 1											
	F_{OSC} = 8.000 MHz			F_{OSC} = 4.000 MHz			F_{OSC} = 3.6864 MHz			F_{OSC} = 1.000 MHz		
	Actual Rate	% Error	SPBRG value (decimal)	Actual Rate	% Error	SPBRG value (decimal)	Actual Rate	% Error	SPBRG value (decimal)	Actual Rate	% Error	SPBRG value (decimal)
300	299.9	-0.02	1666	300.1	0.04	832	300.0	0.00	767	300.5	0.16	207
1200	1199	-0.08	416	1202	0.16	207	1200	0.00	191	1202	0.16	51
2400	2404	0.16	207	2404	0.16	103	2400	0.00	95	2404	0.16	25
9600	9615	0.16	51	9615	0.16	25	9600	0.00	23	—	—	—
10417	10417	0.00	47	10417	0.00	23	10473	0.53	21	10417	0.00	5
19.2k	19.23k	0.16	25	19.23k	0.16	12	19.20k	0.00	11	—	—	—
57.6k	55556	-3.55	8	—	—	—	57.60k	0.00	3	—	—	—
115.2k	—	—	—	—	—	—	115.2k	0.00	1	—	—	—

BAUD RATE	SYNC = 0, BRGH = 1, BRG16 = 1 or SYNC = 1, BRG16 = 1											
	F_{OSC} = 32.000 MHz			F_{OSC} = 20.000 MHz			F_{OSC} = 18.432 MHz			F_{OSC} = 11.0592 MHz		
	Actual Rate	% Error	SPBRG value (decimal)	Actual Rate	% Error	SPBRG value (decimal)	Actual Rate	% Error	SPBRG value (decimal)	Actual Rate	% Error	SPBRG value (decimal)
300	300.0	0.00	26666	300.0	0.00	16665	300.0	0.00	15359	300.0	0.00	9215
1200	1200	0.00	6666	1200	-0.01	4166	1200	0.00	3839	1200	0.00	2303
2400	2400	0.01	3332	2400	0.02	2082	2400	0.00	1919	2400	0.00	1151
9600	9604	0.04	832	9597	-0.03	520	9600	0.00	479	9600	0.00	287
10417	10417	0.00	767	10417	0.00	479	10425	0.08	441	10433	0.16	264
19.2k	19.18k	-0.08	416	19.23k	0.16	259	19.20k	0.00	239	19.20k	0.00	143
57.6k	57.55k	-0.08	138	57.47k	-0.22	86	57.60k	0.00	79	57.60k	0.00	47
115.2k	115.9k	0.64	68	116.3k	0.94	42	115.2k	0.00	39	115.2k	0.00	23

BAUD RATE	SYNC = 0, BRGH = 1, BRG16 = 1 or SYNC = 1, BRG16 = 1											
	F_{OSC} = 8.000 MHz			F_{OSC} = 4.000 MHz			F_{OSC} = 3.6864 MHz			F_{OSC} = 1.000 MHz		
	Actual Rate	% Error	SPBRG value (decimal)	Actual Rate	% Error	SPBRG value (decimal)	Actual Rate	% Error	SPBRG value (decimal)	Actual Rate	% Error	SPBRG value (decimal)
300	300.0	0.00	6666	300.0	0.01	3332	300.0	0.00	3071	300.1	0.04	832
1200	1200	-0.02	1666	1200	0.04	832	1200	0.00	767	1202	0.16	207
2400	2401	0.04	832	2398	0.08	416	2400	0.00	383	2404	0.16	103

9600	9615	0.16	207	9615	0.16	103	9600	0.00	95	9615	0.16	25
10417	10417	0	191	10417	0.00	95	10473	0.53	87	10417	0.00	23
19.2k	19.23k	0.16	103	19.23k	0.16	51	19.20k	0.00	47	19.23k	0.16	12
57.6k	57.14k	-0.79	34	58.82k	2.12	16	57.60k	0.00	15	—	—	—
115.2k	117.6k	2.12	16	111.1k	-3.55	8	115.2k	0.00	7	—	—	—

24.3.1 Auto-Baud Detect

The EUSART module supports automatic detection and calibration of the baud rate.

In the Auto-Baud Detect (ABD) mode, the clock to the BRG is reversed. Rather than the BRG clocking the incoming RX signal, the RX signal is timing the BRG. The Baud Rate Generator is used to time the period of a received 55h (ASCII “U”) which is the Sync character for the LIN bus. The unique feature of this character is that it has five rising edges, including the Stop bit edge.

Setting the Auto-Baud Detect Enable (ABDEN) bit starts the auto-baud calibration sequence. While the ABD sequence takes place, the EUSART state machine is held in Idle. On the first rising edge of the receive line, after the Start bit, the SPxBRG register begins counting up using the BRG counter clock as shown in Figure 24-6. The fifth rising edge will occur on the RXx pin at the end of the eighth bit period. At that time, an accumulated value totaling the proper BRG period is left in the SPxBRGH:SPxBRGL register pair, the ABDEN bit is automatically cleared, and the RCxIF interrupt flag is set. The value in the RCxREG register needs to be read to clear the RCxIF interrupt. RCxREG content may be discarded. When calibrating for modes that do not use the SPxBRGH register, the user can verify that the SPxBRGL register did not overflow by checking for 00h in the SPxBRGH register.

The BRG auto-baud clock is determined by the BRG16 and BRGH bits, as shown in Table 24-3. During ABD, both the SPxBRGH and SPxBRGL registers are used as a 16-bit counter, independent of the BRG16 bit setting. While calibrating the baud rate period, the SPxBRGH and SPxBRGL registers are clocked at 1/8th the BRG base clock rate. The resulting byte measurement is the average bit time when clocked at full speed.

Notes:

1. If the Wake-Up Enable (WUE) bit is set with the ABDEN bit, auto-baud detection will occur on the byte following the Break character (see 24.3.3. Auto-Wake-Up on Break).
2. It is up to the user to determine that the incoming character baud rate is within the range of the selected BRG clock source. Some combinations of oscillator frequency and EUSART baud rates are not possible.
3. During the auto-baud process, the auto-baud counter starts counting at one. Upon completion of the auto-baud sequence, to achieve maximum accuracy, subtract 1 from the SPxBRGH:SPxBRGL register pair.

Table 24-3. BRG Counter Clock Rates

BRG16	BRGH	BRG Base Clock	BRG ABD Clock
1	1	$F_{OSC}/4$	$F_{OSC}/32$
1	0	$F_{OSC}/16$	$F_{OSC}/128$
0	1	$F_{OSC}/16$	$F_{OSC}/128$
0	0	$F_{OSC}/64$	$F_{OSC}/512$

Note: During the ABD sequence, the SPxBRGL and SPxBRGH registers are both used as a 16-bit counter, independent of the BRG16 setting.

Figure 24-6. Automatic Baud Rate Calibration

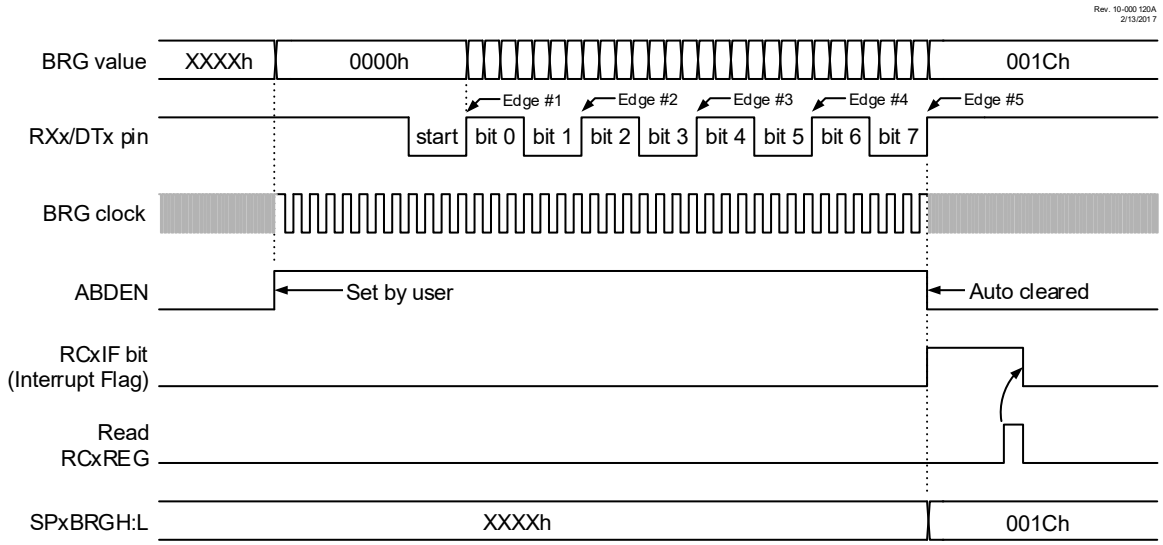

24.3.2 Auto-Baud Overflow

During the course of automatic baud detection, the Auto-Baud Detect Overflow (ABDOVF) bit will be set if the baud rate counter overflows before the fifth rising edge is detected on the RXx pin. The ABDOVF bit indicates that the counter has exceeded the maximum count that can fit in the 16 bits of the SPxBRGH:SPxBRGL register pair. After the ABDOVF bit has been set, the counter continues to count until the fifth rising edge is detected on the RXx pin. Upon detecting the fifth RX edge, the hardware will set the RCxIF interrupt flag and clear the ABDEN bit. The RCxIF flag can be subsequently cleared by reading the RCxREG register. The ABDOVF bit can be cleared by software directly.

To terminate the auto-baud process before the RCxIF flag is set, clear the ABDEN bit then clear the ABDOVF bit. The ABDOVF bit will remain set if the ABDEN bit is not cleared first.

24.3.3 Auto-Wake-Up on Break

During Sleep mode, all clocks to the EUSART are suspended. Because of this, the Baud Rate Generator is inactive and a proper character reception cannot be performed. The Auto-Wake-Up feature allows the controller to wake up due to activity on the RX/DT line. This feature is available only in Asynchronous mode.

The Auto-Wake-Up feature is enabled by setting the WUE bit. Once set, the normal receive sequence on RX/DT is disabled, and the EUSART remains in an Idle state, monitoring for a wake-up event independent of the CPU mode. A wake-up event consists of a high-to-low transition on the RX/DT line. This coincides with the start of a Sync Break or a wake-up signal character for the LIN protocol.

The EUSART module generates an RCxIF interrupt coincident with the wake-up event. The interrupt is generated synchronously to the Q clocks in normal CPU operating modes as shown in Figure 24-7, and asynchronously if the device is in Sleep mode, as shown in Figure 24-8. The Interrupt condition is cleared by reading the RCxREG register.

The WUE bit is automatically cleared by the low-to-high transition on the RX line at the end of the Break. This signals to the user that the Break event is over. At this point, the EUSART module is in Idle mode waiting to receive the next character.

24.3.3.1 Special Considerations

Break Character

To avoid character errors or character fragments during a wake-up event, the wake-up character must be all zeros.

When the wake-up is enabled, the function works independent of the low time on the data stream. If the WUE bit is set and a valid nonzero character is received, the low time from the Start bit to the first rising edge will be interpreted

as the wake-up event. The remaining bits in the character will be received as a fragmented character and subsequent characters can result in framing or overrun errors.

Therefore, the initial character in the transmission must be all '0's. This must be 10 or more bit times, 13-bit times recommended for LIN bus, or any number of bit times for standard RS-232 devices.

WUE Bit

The wake-up event causes a receive interrupt by setting the RCxIF bit. The WUE bit is cleared in hardware by a rising edge on RX/DT. The Interrupt condition is then cleared in software by reading the RCxREG register and discarding its contents.

To ensure that no actual data is lost, check the RCIDL bit to verify that a receive operation is not in process before setting the WUE bit. If a receive operation is not occurring, the WUE bit may then be set just prior to entering the Sleep mode.

Figure 24-7. Auto-Wake-Up (WUE) Bit Timing During Normal Operation

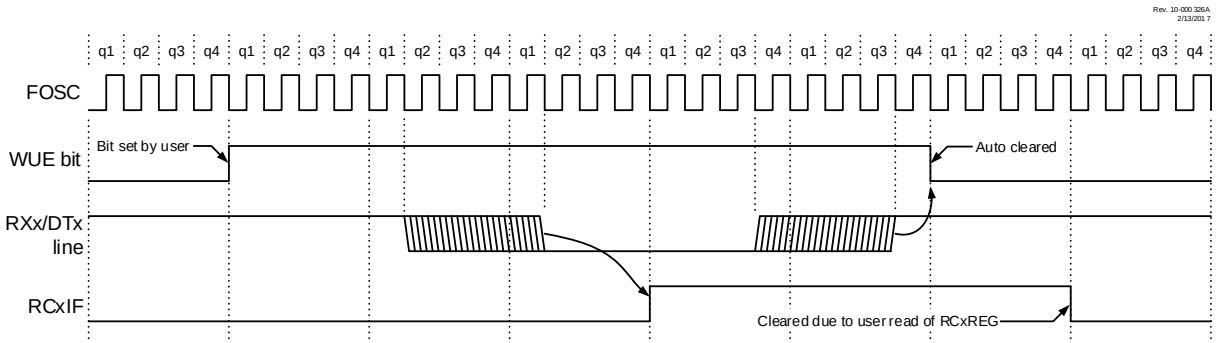

Note: The EUSART remains in Idle while the WUE bit is set.

Figure 24-8. Auto-Wake-Up (WUE) Bit Timings During Sleep

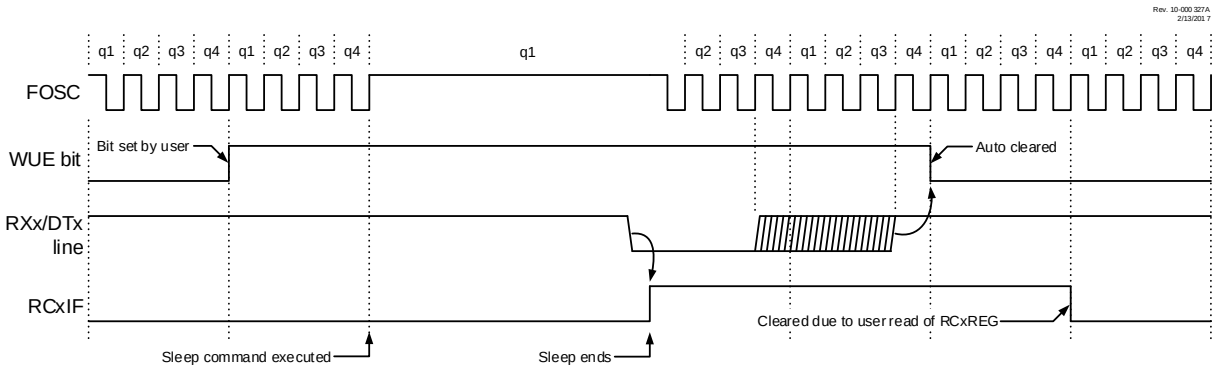

Note: The EUSART remains in Idle while the WUE bit is set.

24.3.4 Break Character Sequence

The EUSART module has the capability of sending the special Break character sequences that are required by the LIN bus standard. A Break character consists of a Start bit, followed by 12 '0' bits and a Stop bit.

To send a Break character, set the Send Break Character (SENDB) and Transmit Enable (TXEN) bits. The Break character transmission is then initiated by a write to the TXxREG. The value of data written to TXxREG will be ignored and all '0's will be transmitted.

The SENDB bit is automatically reset by hardware after the corresponding Stop bit is sent. This allows the user to preload the transmit FIFO with the next transmit byte following the Break character (typically, the Sync character in the LIN specification).

The Transmit Shift Register Status (TRMT) bit indicates when the transmit operation is Active or Idle, just as it does during normal transmission. See Figure 24-9 for more details.

24.3.4.1 Break and Sync Transmit Sequence

The following sequence will start a message frame header made up of a Break, followed by an auto-baud Sync byte. This sequence is typical of a LIN bus host.

1. Configure the EUSART for the desired mode.
2. Set the TXEN and SENDB bits to enable the Break sequence.
3. Load the TXxREG with a dummy character to initiate transmission (the value is ignored).
4. Write '`55h`' to TXxREG to load the Sync character into the transmit FIFO buffer.
5. After the Break has been sent, the SENDB bit is reset by hardware and the Sync character is then transmitted.

When the TXxREG becomes empty, as indicated by TXxIF, the next data byte can be written to TXxREG.

24.3.5 Receiving a Break Character

The EUSART module can receive a Break character in two ways.

The first method to detect a Break character uses the Framing Error (FERR) bit and the received data as indicated by RCxREG. The Baud Rate Generator is assumed to have been initialized to the expected baud rate.

A Break character has been received when all three of the following conditions are true:

- RCxIF bit is set
- FERR bit is set
- RCxREG = `00h`

The second method uses the Auto-Wake-Up feature described in 24.3.3. Auto-Wake-Up on Break. By enabling this feature, the EUSART will sample the next two transitions on RX/DT, cause an RCxIF interrupt, and receive the next data byte followed by another interrupt.

Note that following a Break character, the user will typically want to enable the Auto-Baud Detect feature. For both methods, the user can set the ABDEN bit before placing the EUSART in Sleep mode.

Figure 24-9. Send Break Character Sequence

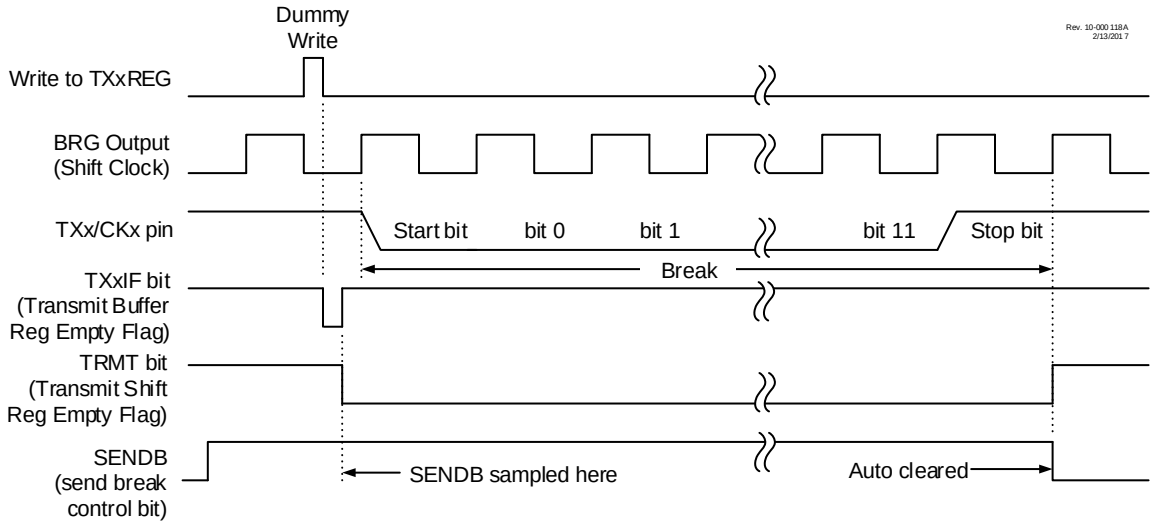

24.4 EUSART Synchronous Mode

Synchronous serial communications are typically used in systems with a single host and one or more clients. The host device contains the necessary circuitry for baud rate generation and supplies the clock for all devices in the system. Client devices can take advantage of the host clock by eliminating the internal clock generation circuitry.

There are two signal lines in Synchronous mode: A bidirectional data line (DT) and a clock line (CK). The clients use the external clock supplied by the host to shift the serial data into and out of their respective receive and transmit shift registers. Since the data line is bidirectional, synchronous operation is half-duplex only. Half-duplex refers to the fact that host and client devices can receive and transmit data but not both simultaneously. The EUSART can operate as either a host or client device.

Start and Stop bits are not used in synchronous transmissions.

24.4.1 Synchronous Host Mode

The following bits are used to configure the EUSART for synchronous host operation:

- The SYNC bit is set to '1' to configure the EUSART for synchronous operation
- The Clock Source Select (CSRC) bit is set to '1' to configure the EUSART as the host
- The Single Receive Enable (SREN) bit is set to '0' for transmit; SREN = 1 for receive (recommended setting to receive 1 byte)
- The Continuous Receive Enable (CREN) bit is set to '0' for transmit; CREN = 1 to receive continuously
- The SPEN bit is set to '1' to enable the EUSART interface

Important: Clearing the SREN and CREN bits ensure that the device is in the Transmit mode, otherwise the device will be configured to receive.

24.4.1.1 Host Clock

Synchronous data transfers use a separate clock line, which is synchronous with the data. A device configured as a host transmits the clock on the TX/CK line. The TXx/CKx pin output driver is automatically enabled when the EUSART is configured for synchronous transmit or receive operation. Serial data bits change on the leading edge to ensure they are valid at the trailing edge of each clock. One clock cycle is generated for each data bit. Only as many clock cycles are generated as there are data bits.

24.4.1.2 Clock Polarity

A clock polarity option is provided for Microwire compatibility. Clock polarity is selected with the Clock/Transmit Polarity Select (SCKP) bit. Setting the SCKP bit sets the clock Idle state as high. When the SCKP bit is set, the data changes on the falling edge of each clock. Clearing the SCKP bit sets the Idle state as low. When the SCKP bit is cleared, the data changes on the rising edge of each clock.

24.4.1.3 Synchronous Host Transmission

Data is transferred out of the device on the RXx/DTx pin. The RXx/DTx and TXx/CKx pin output drivers are automatically enabled when the EUSART is configured for synchronous host transmit operation.

A transmission is initiated by writing a character to the TXxREG register. If the TSR still contains all or part of a previous character the new character data is held in the TXxREG until the last bit of the previous character has been transmitted. If this is the first character, or the previous character has been completely flushed from the TSR, the data in the TXxREG is immediately transferred to the TSR. The transmission of the character commences immediately following the transfer of the data to the TSR from the TXxREG.

Each data bit changes on the leading edge of the host clock and remains valid until the subsequent leading clock edge.

Note: The TSR register is not mapped in data memory, so it is not available to the user.

24.4.1.4 Synchronous Host Transmission Setup

1. Initialize the SPxBRGH;SPxBRGL register pair and the BRG16 bit to achieve the desired baud rate (see 24.3. EUSART Baud Rate Generator (BRG)).
2. Select the transmit output pin by writing the appropriate values to the RxyPPS register and RXxPPS register. Both selections may enable the same pin.
3. Select the clock output pin by writing the appropriate values to the RxyPPS register and TXxPPS register. Both selections may enable the same pin.

4. Enable the synchronous host serial port by setting bits SYNC, SPEN and CSRC.
5. Disable Receive mode by clearing the SREN and CREN bits.
6. Enable Transmit mode by setting the TXEN bit.
7. If 9-bit transmission is desired, set the TX9 bit.
8. If interrupts are desired, set the TXxIE bit of the PIEx register and the GIE and PEIE bits of the INTCON register.
9. If 9-bit transmission is selected, the ninth bit will be loaded in the TX9D bit.
10. Start transmission by loading data to the TXxREG register.

Figure 24-10. Synchronous Transmission

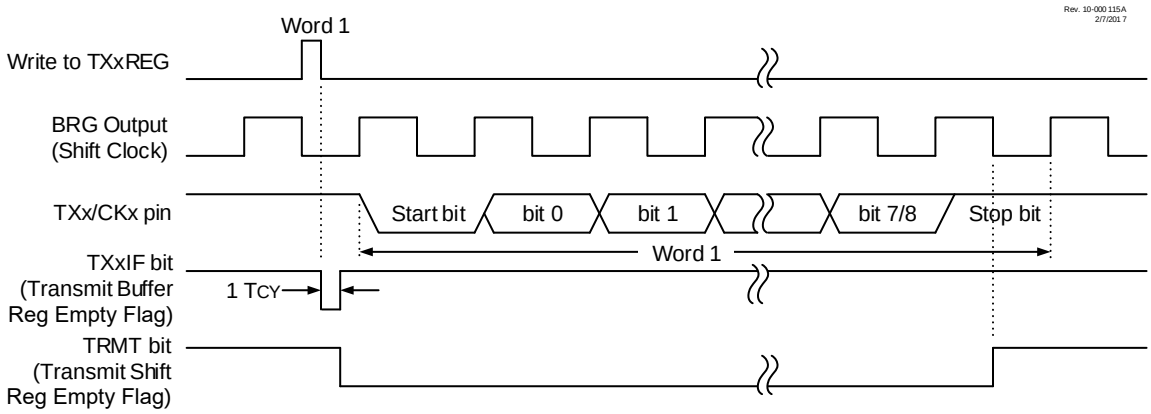

24.4.1.5 Synchronous Host Reception

Data is received at the RXx/DTx pin. The RXx/DTx pin output driver is automatically disabled when the EUSART is configured for synchronous host receive operation.

In Synchronous mode, reception is enabled by setting either the Single Receive Enable (SREN) bit or the Continuous Receive Enable (CREN) bit.

When SREN is set and CREN is clear, only as many clock cycles are generated as there are data bits in a single character. The SREN bit is automatically cleared at the completion of one character. When CREN is set, clocks are continuously generated until CREN is cleared. If CREN is cleared in the middle of a character the CK clock stops immediately and the partial character is discarded. If SREN and CREN are both set, then SREN is cleared at the completion of the first character and CREN takes precedence.

To initiate reception, set either SREN or CREN. Data is sampled at the RXx/DTx pin on the trailing edge of the TX/CK clock pin and is shifted into the Receive Shift Register (RSR). When a complete character is received into the RSR, the RCxIF bit is set and the character is automatically transferred to the two character receive FIFO. The eight Least Significant bits of the top character in the receive FIFO are available in RCxREG. The RCxIF bit remains set as long as there are unread characters in the receive FIFO.

Note: If the RX/DT function is on an analog pin, the corresponding ANSEL bit must be cleared for the receiver to function.

24.4.1.6 Client Clock

Synchronous data transfers use a separate clock line, which is synchronous with the data. A device configured as a client receives the clock on the TX/CK line. The TXx/CKx pin output driver is automatically disabled when the device is configured for synchronous client transmit or receive operation. Serial data bits change on the leading edge to ensure they are valid at the trailing edge of each clock. One data bit is transferred for each clock cycle. Only as many clock cycles may be received as there are data bits.

Important: If the device is configured as a client and the TX/CK function is on an analog pin, the corresponding ANSEL bit must be cleared.

24.4.1.7 Receive Overrun Error

The receive FIFO buffer can hold two characters. An overrun error will be generated if a third character, in its entirety, is received before the FIFO is accessed. When this happens the Overrun Error (OERR) bit is set. The characters already in the FIFO buffer can be read but no additional characters will be received until the error is cleared. The error must be cleared by either clearing the CREN bit or by resetting the EUSART by clearing the SPEN bit.

24.4.1.8 Receiving 9-Bit Characters

The EUSART supports 9-bit character reception. When the 9-Bit Receive Enable (RX9) bit is set, the EUSART will shift nine bits into the RSR for each character received. The RX9D bit is the ninth and Most Significant data bit of the top unread character in the receive FIFO. When reading 9-bit data from the receive FIFO buffer, the RX9D data bit must be read before reading the eight Least Significant bits from the RCxREG register.

24.4.1.9 Synchronous Host Reception Setup

1. Initialize the SPxBRGH:SPxBRGL register pair and set or clear the BRG16 bit, as required, to achieve the desired baud rate.
2. Select the receive input pin by writing the appropriate values to the RxyPPS and RXxPPS registers. Both selections may enable the same pin.
3. Select the clock output pin by writing the appropriate values to the RxyPPS and TXxPPS registers. Both selections may enable the same pin.
4. Clear the ANSEL bit for the RXx pin (if applicable).
5. Enable the synchronous host serial port by setting the SYNC, SPEN and CSRC bits.
6. Ensure that the CREN and SREN bits are cleared.
7. If interrupts are desired, set the RCxIE bit of the PIEx register and the GIE and PEIE bits of the INTCON register.
8. If 9-bit reception is desired, set the RX9 bit.
9. Start reception by setting the SREN bit, or for continuous reception set the CREN bit.
10. The RCxIF Interrupt Flag bit will be set when reception of a character is complete. An interrupt will be generated if the RCxIE enable bit was set.
11. Read the RCxSTA register to get the ninth bit (if enabled) and determine if any error occurred during reception.
12. Read the 8-bit received data by reading the RCxREG register.
13. If an overrun error occurs, clear the error by either clearing the CREN bit or by clearing the SPEN bit which resets the EUSART.

Figure 24-11. Synchronous Reception (Host Mode, SREN)

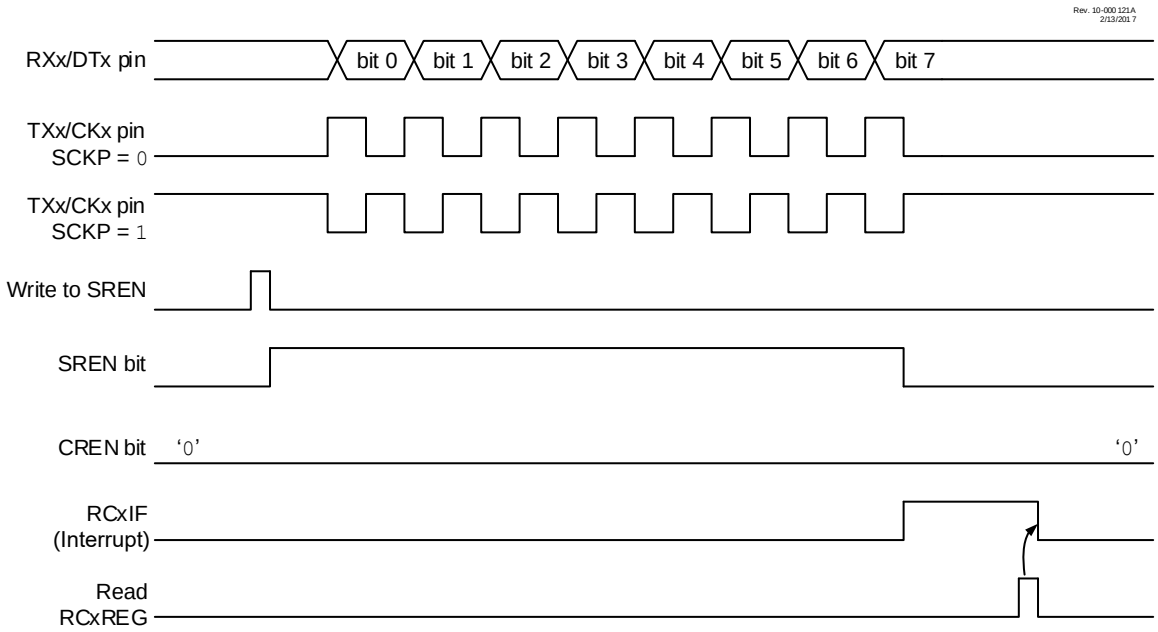

24.4.2 Synchronous Client Mode

The following bits are used to configure the EUSART for synchronous client operation:

- SYNC = 1 (configures the EUSART for synchronous operation)
- CSRC = 0 (configures the EUSART as a client)
- SREN = 0 (for transmit); SREN = 1 (for single byte receive)
- CREN = 0 (for transmit); CREN = 1 (recommended setting for continuous receive)
- SPEN = 1 (enables the EUSART)

Important: Clearing the SREN and CREN bits ensure that the device is in Transmit mode, otherwise the device will be configured to receive.

24.4.2.1 EUSART Synchronous Client Transmit

The operation of the Synchronous Host and Client modes are identical (see 24.4.1.3. Synchronous Host Transmission), except in the case of the Sleep mode.

If two words are written to the TXxREG and then the SLEEP instruction is executed, the following will occur:

1. The first character will immediately transfer to the TSR register and transmit.
2. The second word will remain in the TXxREG register.
3. The TXxIF bit will not be set.
4. After the first character has been shifted out of TSR, the TXxREG register will transfer the second character to the TSR and the TXxIF bit will now be set.
5. If the PEIE and TXxIE bits are set, the interrupt will wake the device from Sleep and execute the next instruction. If the GIE bit is also set, the program will call the Interrupt Service Routine.

24.4.2.2 Synchronous Client Transmission Setup

1. Set the SYNC and SPEN bits and clear the CSRC bit.
2. Select the transmit output pin by writing the appropriate values to the RxyPPS register and RXxPPS register. Both selections may enable the same pin.
3. Select the clock input pin by writing the appropriate value to the TXxPPS register.
4. Clear the ANSEL bit for the CKx pin (if applicable).
5. Clear the CREN and SREN bits.
6. If interrupts are desired, set the TXxIE bit of the PIEx register and the GIE and PEIE bits of the INTCON register.
7. If 9-bit transmission is desired, set the TX9 bit.
8. Enable transmission by setting the TXEN bit.
9. If 9-bit transmission is selected, insert the Most Significant bit into the TX9D bit.
10. Prepare for transmission by writing the eight Least Significant bits to the TXxREG register. The word will be transmitted in response to the Host clocks at the CKx pin.

24.4.2.3 EUSART Synchronous Client Reception

The operation of the Synchronous Host and Client modes is identical (see 24.4.1.5. Synchronous Host Reception), with the following exceptions:

- Sleep
- CREN bit is always set, therefore the receiver is never Idle
- SREN bit, which is a “don’t care” in Client mode

A character may be received while in Sleep mode by setting the CREN bit prior to entering Sleep. Once the word is received, the RSR register will transfer the data to the RCxREG register. If the RCxIE enable bit is set, the interrupt generated will wake the device from Sleep and execute the next instruction. If the GIE bit is also set, the program will branch to the interrupt vector.

24.4.2.4 Synchronous Client Reception Setup

1. Set the SYNC and SPEN bits and clear the CSRC bit.
2. Select the receive input pin by writing the appropriate value to the RXxPPS register.
3. Select the clock input pin by writing the appropriate values to the TXxPPS register.
4. Clear the ANSEL bit for both the TXx/CKx and RXx/DTx pins (if applicable).
5. If interrupts are desired, set the RCxIE bit of the PIEx register and the GIE and PEIE bits of the INTCON register.
6. If 9-bit reception is desired, set the RX9 bit.
7. Set the CREN bit to enable reception.
8. The RCxIF bit will be set when reception is complete. An interrupt will be generated if the RCxIE bit was set.
9. If 9-bit mode is enabled, retrieve the Most Significant bit from the RX9D bit.
10. Retrieve the eight Least Significant bits from the receive FIFO by reading the RCxREG register.
11. If an overrun error occurs, clear the error by either clearing the CREN bit or by clearing the SPEN bit which resets the EUSART.

24.5 EUSART Operation During Sleep

The EUSART will remain active during Sleep only in the Synchronous Client mode. All other modes require the system clock and therefore cannot generate the necessary signals to run the Transmit or Receive Shift registers during Sleep.

Synchronous Client mode uses an externally generated clock to run the Transmit and Receive Shift registers.

24.5.1 Synchronous Receive During Sleep

To receive during Sleep, all the following conditions must be met before entering Sleep mode:

- RCxSTA and TXxSTA Control registers must be configured for Synchronous Client Reception (see 24.4.2.4. Synchronous Client Reception Setup).
- If interrupts are desired, set the RCxIE bit of the PIEx register and the GIE and PEIE bits of the INTCON register.
- The RCxIF interrupt flag must be cleared by reading RCxREG to unload any pending characters in the receive buffer.

Upon entering Sleep mode, the device will be ready to accept data and clocks on the RXx/DTx and TXx/CKx pins, respectively. When the data word has been completely clocked in by the external device, the RCxIF Interrupt Flag bit of the PIRx register will be set. Thereby, waking the processor from Sleep.

Upon waking from Sleep, the instruction following the `SLEEP` instruction will be executed. If the Global Interrupt Enable (GIE) bit of the INTCON register is also set, then the Interrupt Service Routine (ISR) will be called.

24.5.2 Synchronous Transmit During Sleep

To transmit during Sleep, all the following conditions must be met before entering Sleep mode:

- The RCxSTA and TXxSTA Control registers must be configured for synchronous client transmission (see 24.4.2.2. Synchronous Client Transmission Setup).
- The TXxIF interrupt flag must be cleared by writing the output data to the TXxREG, thereby filling the TSR and transmit buffer.
- The TXxIE interrupt enable bits of the PIEx register and PEIE of the INTCON register must be written to '`1`'.
- If interrupts are desired, set the GIE bit of the INTCON register.

Upon entering Sleep mode, the device will be ready to accept clocks on the TXx/CKx pin and transmit data on the RXx/DTx pin. When the data word in the TSR register has been completely clocked out by the external device, the pending byte in the TXxREG will transfer to the TSR and the TXxIF flag will be set. Thereby, waking the processor from Sleep. At this point, the TXxREG is available to accept another character for transmission. Writing TXxREG will clear the TXxIF flag.

Upon waking from Sleep, the instruction following the `SLEEP` instruction will be executed. If the Global Interrupt Enable (GIE) bit is also set then the Interrupt Service Routine (ISR) will be called.

24.6 Register Definitions: EUSART Control

24.6.1 TXxSTA

Name: TXxSTA
Offset: 0x011E

Transmit Status and Control Register

Bit	7	6	5	4	3	2	1	0
	CSRC	TX9	TXEN	SYNC	SENDB	BRGH	TRMT	TX9D
Access	R/W	R/W	R/W	R/W	R/W	R/W	R	R/W
Reset	0	0	0	0	0	0	1	0

Bit 7 – CSRC Clock Source Select

Value	Condition	Description
1	SYNC = 1	Host mode (clock generated internally from BRG)
0	SYNC = 1	Client mode (clock from external source)
X	SYNC = 0	Don’t care

Bit 6 – TX9 9-Bit Transmit Enable

Value	Description
1	Selects 9-bit transmission
0	Selects 8-bit transmission

Bit 5 – TXEN Transmit Enable
Enables transmitter(1)

Value	Description
1	Transmit enabled
0	Transmit disabled

Bit 4 – SYNC EUSART Mode Select

Value	Description
1	Synchronous mode
0	Asynchronous mode

Bit 3 – SENDB Send Break Character

Value	Condition	Description
1	SYNC = 0	Send Sync Break on next transmission (cleared by hardware upon completion)
0	SYNC = 0	Sync Break transmission disabled or completed
X	SYNC = 1	Don’t care

Bit 2 – BRGH High Baud Rate Select

Value	Condition	Description
1	SYNC = 0	High speed, if BRG16 = 1, baud rate is baudclk/4; else baudclk/16
0	SYNC = 0	Low speed
X	SYNC = 1	Don’t care

Bit 1 – TRMT Transmit Shift Register (TSR) Status

Value	Description
1	TSR is empty
0	TSR is not empty

Bit 0 – TX9D Ninth Bit of Transmit Data
Can be address/data bit or a parity bit.

Note: 1. The SREN and CREN bits override TXEN in Sync mode.

24.6.2 RCxSTA

Name: RCxSTA
Offset: 0x011D

Receive Status and Control Register

Bit	7	6	5	4	3	2	1	0
	SPEN	RX9	SREN	CREN	ADDEN	FERR	OERR	RX9D
Access	R/W	R/W	R/W/HC	R/W	R/W	R	R/HC	R/HC
Reset	0	0	0	0	0	0	0	0

Bit 7 – SPEN Serial Port Enable

Value	Description
1	Serial port enabled
0	Serial port disabled (held in Reset)

Bit 6 – RX9 9-Bit Receive Enable

Value	Description
1	Selects 9-bit reception
0	Selects 8-bit reception

Bit 5 – SREN Single Receive Enable
Controls reception. This bit is cleared by hardware when reception is complete

Value	Condition	Description
1	SYNC = 1 AND CSRC = 1	Start single receive
0	SYNC = 1 AND CSRC = 1	Single receive is complete
X	SYNC = 0 OR CSRC = 0	Don’t care

Bit 4 – CREN Continuous Receive Enable

Value	Condition	Description
1	SYNC = 1	Enables continuous receive until enable bit CREN is cleared (CREN overrides SREN)
0	SYNC = 1	Disables continuous receive
1	SYNC = 0	Enables receiver
0	SYNC = 0	Disables receiver

Bit 3 – ADDEN Address Detect Enable

Value	Condition	Description
1	SYNC = 0 AND RX9 = 1	The receive buffer is loaded and the interrupt occurs only when the ninth received bit is set
0	SYNC = 0 AND RX9 = 1	All bytes are received and interrupt always occurs. Ninth bit can be used as parity bit
X	RX9 = 0 OR SYNC = 1	Don't care

Bit 2 – FERR Framing Error

Value	Description
1	Unread byte in RCxREG has a framing error
0	Unread byte in RCxREG does not have a framing error

Bit 1 – OERR Overrun Error

Value	Description
1	Overrun error (can be cleared by clearing either SPEN or CREN bit)
0	No overrun error

Bit 0 – RX9D Ninth bit of Received Data
This can be address/data bit or a parity bit which is determined by user firmware.

24.6.3 BAUDxCON

Name: BAUDxCON
Offset: 0x011F

Baud Rate Control Register

Bit	7	6	5	4	3	2	1	0
	ABDOVF	RCIDL		SCKP	BRG16		WUE	ABDEN
Access	R	R		R/W	R/W		R/W	R/W
Reset	0	0		0	0		0	0

Bit 7 – ABDOVF Auto-Baud Detect Overflow

Value	Condition	Description
1	SYNC = 0	Auto-baud timer overflowed
0	SYNC = 0	Auto-baud timer did not overflow
X	SYNC = 1	Don't care

Bit 6 – RCIDL Receive Idle Flag

Value	Condition	Description
1	SYNC = 0	Receiver is Idle
0	SYNC = 0	Start bit has been received and the receiver is receiving
X	SYNC = 1	Don't care

Bit 4 – SCKP Clock/Transmit Polarity Select

Value	Condition	Description
1	SYNC = 0	Idle state for transmit (TX) is a low level (transmit data inverted)
0	SYNC = 0	Idle state for transmit (TX) is a high level (transmit data is noninverted)
1	SYNC = 1	Data is clocked on rising edge of the clock
0	SYNC = 1	Data is clocked on falling edge of the clock

Bit 3 – BRG16 16-bit Baud Rate Generator Select

Value	Description
1	16-bit Baud Rate Generator is used
0	8-bit Baud Rate Generator is used

Bit 1 – WUE Wake-Up Enable

Value	Condition	Description
1	SYNC = 0	Receiver is waiting for a falling edge. Upon falling edge, no character will be received and the RCxIF flag will be set. WUE will automatically clear after RCxIF is set.
0	SYNC = 0	Receiver is operating normally
X	SYNC = 1	Don't care

Bit 0 – ABDEN Auto-Baud Detect Enable

Value	Condition	Description
1	SYNC = 0	Auto-Baud Detect mode is enabled (clears when auto-baud is complete)
0	SYNC = 0	Auto-Baud Detect is complete or mode is disabled
X	SYNC = 1	Don't care

24.6.4 RCxREG

Name: RCxREG
Offset: 0x0119

Receive Data Register

Bit	7	6	5	4	3	2	1	0
	RCREG[7:0]							
Access	R	R	R	R	R	R	R	R
Reset	0	0	0	0	0	0	0	0

Bits 7:0 – RCREG[7:0] Receive data

24.6.5 TXxREG

Name: TXxREG
Offset: 0x011A

Transmit Data Register

Bit	7	6	5	4	3	2	1	0
	TXREG[7:0]							
Access	R/W	R/W	R/W	R/W	R/W	R/W	R/W	R/W
Reset	0	0	0	0	0	0	0	0

Bits 7:0 – TXREG[7:0] Transmit Data

24.6.6 SPxBRG

Name: SPxBRG
Offset: 0x011B

EUSART Baud Rate Generator

Bit	15	14	13	12	11	10	9	8
	SPBRG[15:8]							
Access	R/W	R/W	R/W	R/W	R/W	R/W	R/W	R/W
Reset	0	0	0	0	0	0	0	0

Bit	7	6	5	4	3	2	1	0
	SPBRG[7:0]							
Access	R/W	R/W	R/W	R/W	R/W	R/W	R/W	R/W
Reset	0	0	0	0	0	0	0	0

Bits 15:0 – SPBRG[15:0] Baud Rate Register

Notes: The individual bytes in this multibyte register can be accessed with the following register names:

- SPxBRGH: Accesses the high byte SPBRG[15:8]
- SPxBRGL: Accesses the low byte SPBRG[7:0]

24.7 Register Summary - EUSART

Offset	Name	Bit Pos.	7	6	5	4	3	2	1	0
0x00 ... 0x0118	Reserved									
0x0119	RC1REG	7:0	RCREG[7:0]							
0x011A	TX1REG	7:0	TXREG[7:0]							
0x011B	SP1BRG	7:0	SPBRG[7:0]							
		15:8	SPBRG[15:8]							
0x011D	RC1STA	7:0	SPEN	RX9	SREN	CREN	ADDEN	FERR	OERR	RX9D
0x011E	TX1STA	7:0	CSRC	TX9	TXEN	SYNC	SENDB	BRGH	TRMT	TX9D
0x011F	BAUD1CON	7:0	ABDOVF	RCIDL		SCKP	BRG16		WUE	ABDEN

25. MSSP - Host Synchronous Serial Port Module

The Host Synchronous Serial Port (MSSP) module is a serial interface useful for communicating with other peripheral or microcontroller devices. These peripheral devices may be serial EEPROMs, shift registers, display drivers, A/D converters, etc. The MSSP module can operate in one of two modes:

- Serial Peripheral Interface (SPI)
- Inter-Integrated Circuit (I^2C)

The SPI interface can operate in Host or Client mode and supports the following features:

- Selectable clock parity
- Client select synchronization (Client mode only)
- Daisy-chain connection of client devices

The I^2C interface can operate in Host or Client mode and supports the following modes and features:

- Byte NACKing (Client mode)
- Limited multi-host support
- 7-bit and 10-bit addressing
- Start and stop interrupts
- Interrupt masking
- Clock stretching
- Bus collision detection
- General call address matching
- Address masking
- Address Hold and Data Hold modes
- Selectable SDA hold times

25.1 SPI Mode Overview

The Serial Peripheral Interface (SPI) is a synchronous serial data communication bus that operates in Full Duplex mode. Devices communicate in a host/client environment where the host device initiates the communication. A client device is selected for communication using the Client Select feature.

The SPI bus specifies four signal connections:

- Serial Clock (SCK)
- Serial Data Out (SDO)
- Serial Data In (SDI)
- Client Select ($\overline{SS}$)

Figure 25-1 shows the block diagram of the MSSP module when operating in SPI mode.

Figure 25-1. MSSP Block Diagram (SPI Mode)

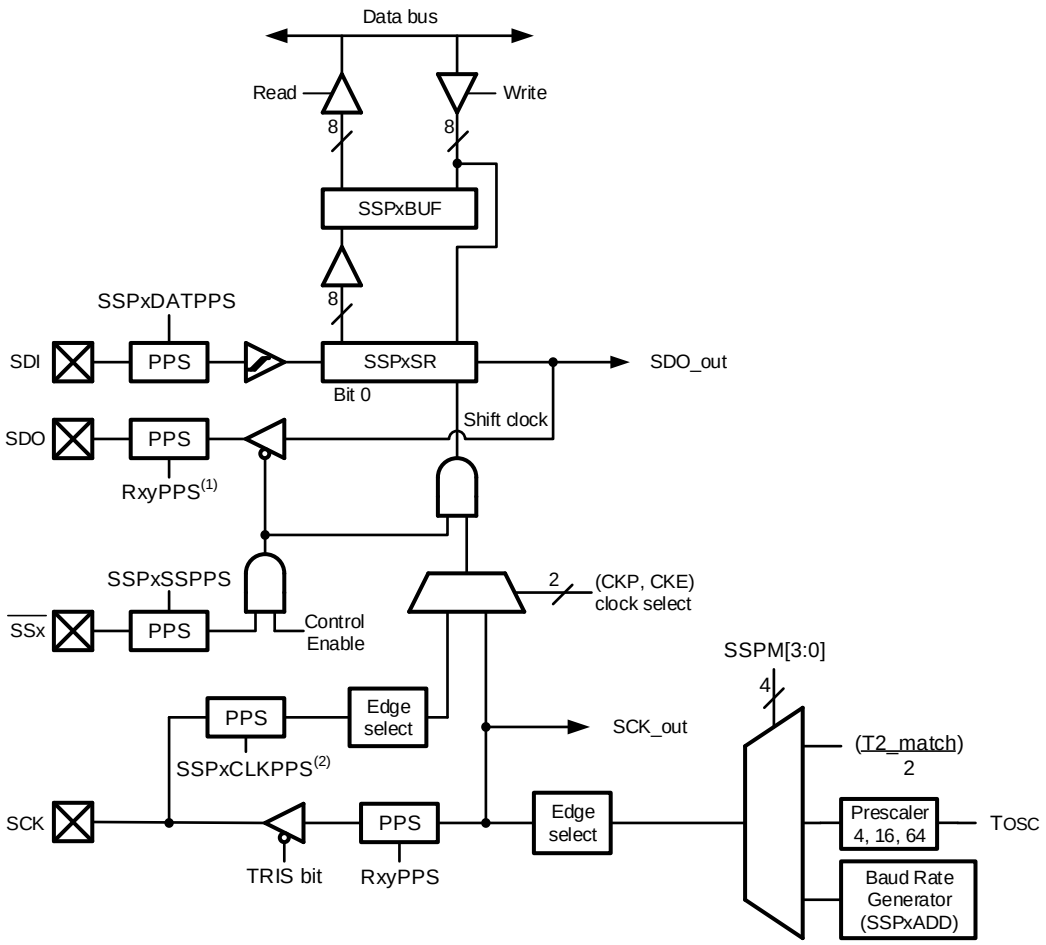

Notes: 1. Output selection for Host mode.
2. Input selection for Client and Host modes.

The SPI bus operates with a single host device and one or more client devices. When multiple client devices are used, an independent Client Select connection is required from the host device to each client device. The host selects only one client at a time. Most client devices have tri-state outputs, so their output signal appears disconnected from the bus when they are not selected.

Figure 25-2 shows a typical connection between a host device and multiple client devices.

Figure 25-2. SPI Host and Multiple Client Connection

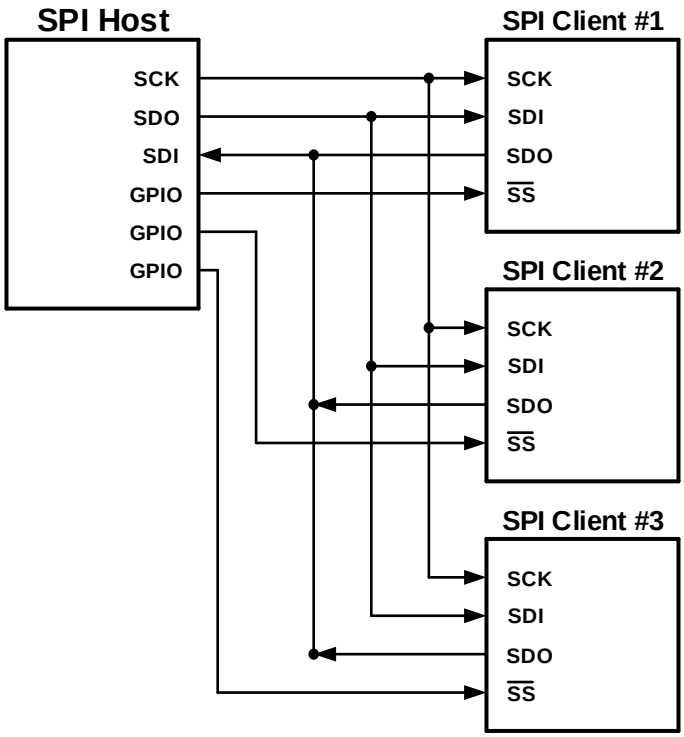

Transmissions involve two shift registers, eight bits in size: One in the host and one in the client. Data is always shifted out one bit at a time, with the Most Significant bit (MSb) shifted out first. At the same time, a new Least Significant bit (LSb) is shifted into the same register.

Figure 25-3 shows a typical connection between two processors configured as host and client devices.

Figure 25-3. SPI Host/Client Connection

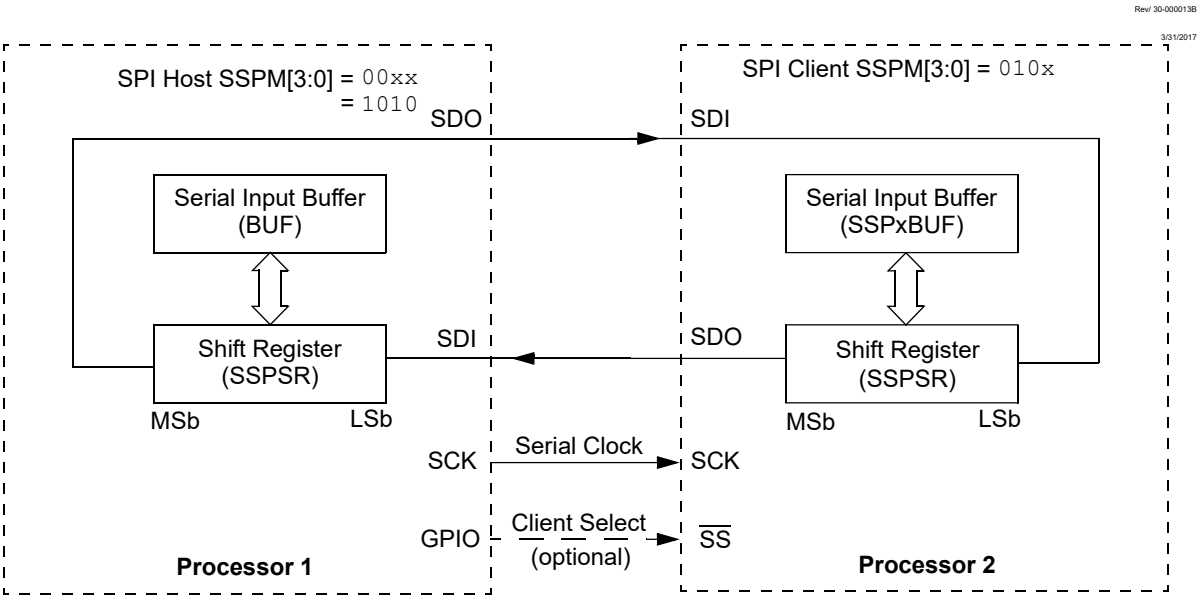

Data is shifted out of both shift registers on the programmed clock edge and latched on the opposite edge of the clock.

The host device transmits information out on its SDO output pin, which is connected to and received by the client's SDI input pin. The client device transmits information out on its SDO output pin, which is connected to and received by the host's SDI input pin.

To begin communication, the host device transmits both the MSb from its shift register and the clock signal. Both the host and client devices need to be configured for the same clock polarity. During each SPI clock cycle, a full-duplex data transmission occurs. This means that while the host device is sending out the MSb from its shift register (on its SDO pin) and the client device is reading this bit and saving it as the LSb of its shift register, the client device is also sending out the MSb from its shift register (on its SDO pin) and the host device is reading this bit and saving it as the LSb of its shift register.

After eight bits have been shifted out, the host and client have exchanged register values. If there is more data to exchange, the shift registers are loaded with new data and the process repeats itself.

Whether the data is meaningful or not (dummy data) depends on the application software. This leads to three scenarios for data transmission:

- Host sends useful data and client sends dummy data.
- Host sends useful data and client sends useful data.
- Host sends dummy data and client sends useful data.

Transmissions must be performed in multiples of eight clock cycles. When there is no more data to be transmitted, the host stops sending the clock signal and it deselects the client.

Every client device connected to the bus that has not been selected through its Client Select line must disregard the clock and transmission signals and must not transmit out any data of its own.

25.1.1 SPI Mode Registers

The MSSP module has six registers for SPI mode operation. They are:

- MSSP Status Register (SSPxSTAT)
- MSSP Control Register 1 (SSPxCON1)
- MSSP Control Register 3 (SSPxCON3)
- MSSP Data Buffer Register (SSPxBUF)

- MSSP Address Register (SSPxADD)
- MSSP Shift (SSPSR) register (not directly accessible)

SSPxCON1 and SSPxSTAT are the control and status registers for SPI mode operation. The SSPxCON1 register is readable and writable. The lower six bits of the SSPxSTAT are read-only. The upper two bits of the SSPxSTAT are read/write.

One of the five SPI Host modes uses the SSPxADD value to determine the Baud Rate Generator clock frequency. More information on the Baud Rate Generator is available in 25.3. Baud Rate Generator.

SSPSR is the shift register used for shifting data in and out. SSPxBUF provides indirect access to the SSPSR register. SSPxBUF is the buffer register to which data bytes are written, and from which data bytes are read.

In receive operations, SSPSR and SSPxBUF together create a buffered receiver. When SSPSR receives a complete byte, it is transferred to SSPxBUF and the SSPxIF interrupt is set.

During transmission, the SSPxBUF is not buffered. A write to SSPxBUF will write to both SSPxBUF and SSPSR.

25.1.2 SPI Mode Operation

When initializing the SPI, several options need to be specified. This is done by programming the appropriate control bits (SSPxCON1[5:0] and SSPxSTAT[7:6]). These control bits allow the following to be specified:

- Host mode (SCK is the clock output)
- Client mode (SCK is the clock input)
- Clock Polarity (Idle state of SCK)
- Data Input Sample Phase (middle or end of data output time)
- Clock Edge (output data on rising/falling edge of SCK)
- Clock Rate (Host mode only)
- Client Select mode (Client mode only)

To enable the serial port, the SSP Enable (SSPEN) bit must be set. To reset or reconfigure SPI mode, clear the SSPEN bit, re-initialize the SSPxCONy registers and then set the SSPEN bit. The SDI, SDO, SCK and $\overline{SS}$ serial port pins are selected with the PPS controls. For the pins to behave as the serial port function, some must have their data direction bits (in the TRIS register) appropriately programmed as follows:

- SDI must have the corresponding TRIS bit set
- SDO must have the corresponding TRIS bit cleared
- SCK (Host mode) must have the corresponding TRIS bit cleared
- SCK (Client mode) must have the corresponding TRIS bit set
- The RxyPPS and SSPxCLKPPS controls must select the same pin
- $\overline{SS}$ must have the corresponding TRIS bit set

Any serial port function that is not desired may be overridden by programming the corresponding data direction (TRIS) register to the opposite value.

The MSSP consists of a Transmit/Receive Shift Register (SSPSR) and a buffer register (SSPxBUF). The SSPSR shifts the data in and out of the device, MSb first. The SSPxBUF holds the data that was written to the SSPSR until the received data is ready. Once the eight bits of data have been received, that byte is moved to the SSPxBUF register. Then, the Buffer Full Status (BF) bit and the MSSP Interrupt Flag (SSPxIF) bit are set. This double-buffering of the received data allows the next byte to start reception before reading the data that was just received. Any write to the SSPxBUF register during transmission/reception of data will be ignored and the Write Collision Detect (WCOL) bit will be set. User software must clear the WCOL bit to allow the following write(s) to the SSPxBUF register to complete successfully.

When the application software is expecting to receive valid data, the SSPxBUF must be read before the next byte of data to be transferred is written to the SSPxBUF. The BF bit indicates when SSPxBUF has been loaded with the received data (transmission is complete). When the SSPxBUF is read, the BF bit is cleared. This data may be irrelevant if the SPI is only a transmitter. The MSSP interrupt is used to determine when the transmission/reception has completed. If the interrupt method is not going to be used, then software polling can be done to ensure that a write collision does not occur.

© 2020-2022 Microchip Technology Inc.
and its subsidiaries

Important: The SSPSR is not directly readable or writable and can only be accessed by addressing the SSPxBUF register.

25.1.2.1 SPI Host Mode

The Host can initiate the data transfer at any time because it controls the SCK line. The Host determines when the client (Processor 2, Figure 25-3) is to broadcast data by the software protocol.

In Host mode, the data is transmitted/received as soon as the SSPxBUF register is written to. If the SPI is only going to receive, the SDO output may be disabled (programmed as an input). The SSPSR register will continue to shift in the signal present on the SDI pin at the programmed clock rate. As each byte is received, it will be loaded into the SSPxBUF register (interrupts and Status bits appropriately set).

The clock polarity is selected by appropriately programming the Clock Polarity Select (CKP) and SPI Clock Edge Select (CKE) bits. Figure 25-4 shows the four clocking configurations. When the CKE bit is set, the SDO data is valid one half of a clock cycle before a clock edge appears on SCK, and transmission occurs on the transition from the Active to Idle clock state. When CKE is clear, the SDO data is valid at the same time as the clock edge appears on SCK, and transmission occurs on the transition from the Idle to Active clock states.

The SPI Data Input Sample (SMP) bit determines when the SDI input is sampled. When SMP is set, input data is sampled at the end of the data output time. When SMP is clear, input data is sampled at the middle of the data output time.

The SPI clock rate (bit rate) is user-programmable to be one of the following:

- $F_{OSC}/4$ (or T_{CY})
- $F_{OSC}/16$ (or $4 * T_{CY}$)
- $F_{OSC}/64$ (or $16 * T_{CY}$)
- Timer2 output/2
- $F_{OSC}/(4 * (SSPxADD + 1))$

Important: In Host mode, the clock signal output to the SCK pin is also the clock signal input to the peripheral. The pin selected for output with the RxyPPS register must also be selected as the peripheral input with the SSPxCLKPPS register.

Figure 25-4. SPI Mode Waveform (Host Mode)

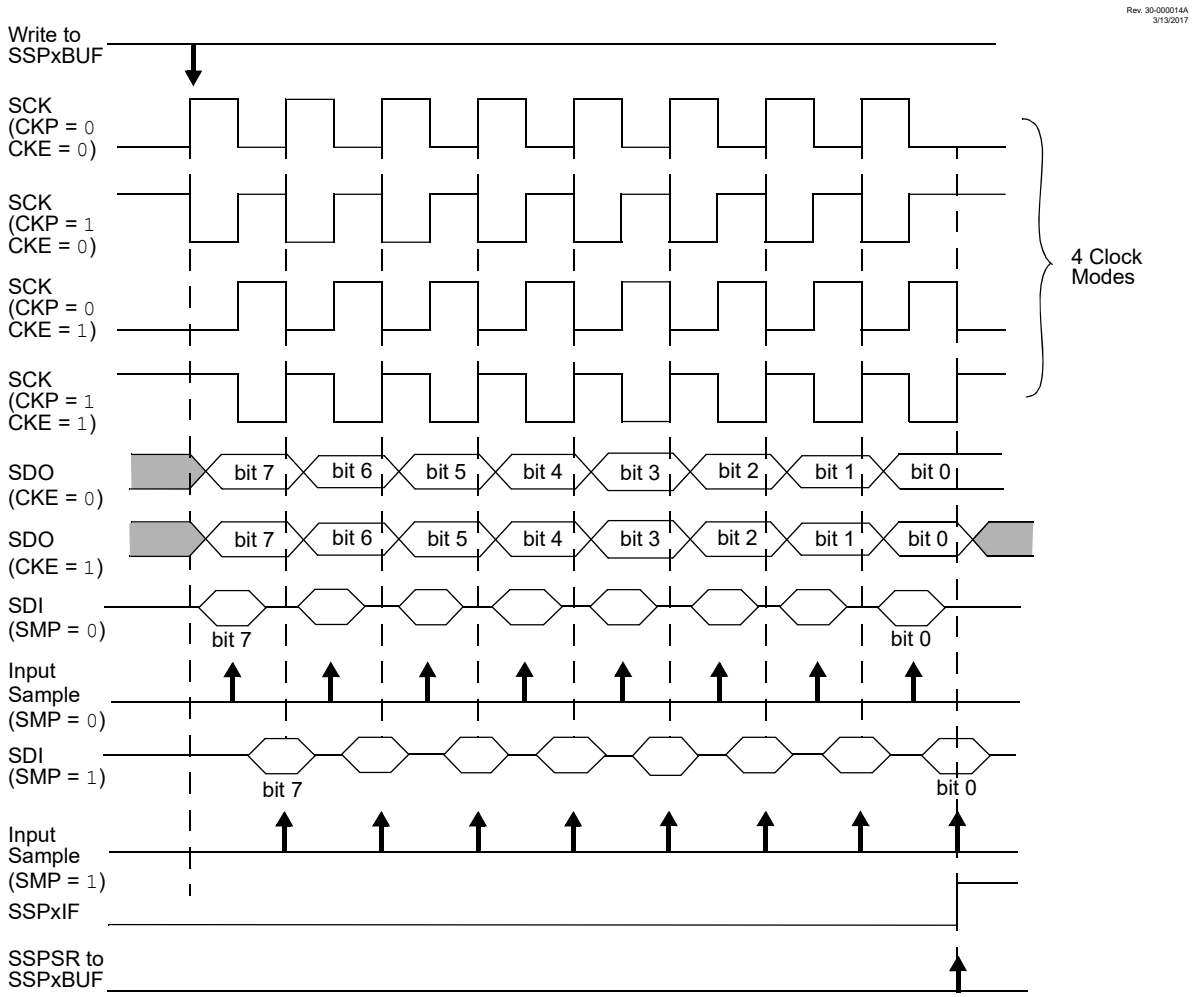

25.1.2.2 SPI Client Mode

In Client mode, the data is transmitted and received as external clock pulses appear on SCK. When the last bit is latched, the SSPxIF Interrupt Flag bit is set.

Before enabling the module in SPI Client mode, the clock line must match the proper Idle state. The clock line can be observed by reading the SCK pin. The Idle state is determined by the CKP bit.

While in Client mode, the external clock is supplied by the external clock source on the SCK pin. This external clock must meet the minimum high and low times as specified in Electrical Specifications.

While in Sleep mode, the client can transmit/receive data. The shift register is clocked from the SCK pin input and when a byte is received, the device will generate an interrupt. If enabled, the device will wake up from Sleep.

25.1.2.3 Daisy-Chain Configuration

The SPI bus can sometimes be connected in a daisy-chain configuration. The first client output is connected to the second client input, the second client output is connected to the third client input, and so on. The final client output is connected to the host input. Each client sends out, during a second group of clock pulses, an exact copy of what was received during the first group of clock pulses. The whole chain acts as one large communication shift register. The daisy-chain feature only requires a single Client Select line from the host device.

In a daisy-chain configuration, only the most recent byte on the bus is required by the client. Setting the Buffer Overwrite Enable (BOEN) bit will enable writes to the SSPxBUF register, even if the previous byte has not been read. This allows the software to ignore data that may not apply to it.

Figure 25-5 shows the block diagram of a typical daisy-chain connection when operating in SPI mode.

Figure 25-5. SPI Daisy-Chain Connection

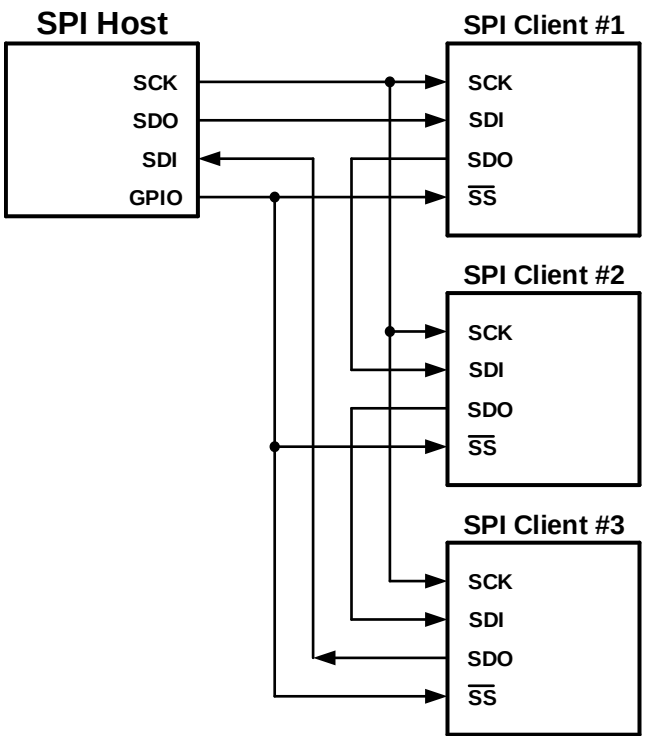

25.1.2.4 Client Select Synchronization

The Client Select can also be used to synchronize communication (see Figure 25-6). The Client Select line is held high until the host device is ready to communicate. When the Client Select line is pulled low, the client knows that a new transmission is starting.

If the client fails to receive the communication properly, it will be reset at the end of the transmission, when the Client Select line returns to a High state. The client is then ready to receive a new transmission when the Client Select line is pulled low again. If the Client Select line is not used, there is a risk that the client will eventually become out of sync with the host. If the client misses a bit, it will always be one bit off in future transmissions. Use of the Client Select line allows the client and host to align themselves at the beginning of each transmission.

The $\overline{SS}$ pin allows a Synchronous Client mode. The SPI must be in Client mode with $\overline{SS}$ pin control enabled (MSSP Mode Select (SSPM) bits = `0100`).

When the $\overline{SS}$ pin is low, transmission and reception are enabled and the SDO pin is driven.

When the $\overline{SS}$ pin goes high, the SDO pin is no longer driven, even if in the middle of a transmitted byte, and becomes a floating output. External pull-up/pull-down resistors may be desirable depending on the application.

When the SPI module resets, the bit counter is forced to '`0`'. This can be done by either forcing the $\overline{SS}$ pin to a high level or clearing the SSPEN bit.

Important:

1. When the SPI is in Client mode with $\overline{SS}$ pin control enabled (SSPM = `0100`), the SPI module will reset if the $\overline{SS}$ pin is set to V_{DD}.
2. When the SPI is used in Client mode with CKE set, the user must enable $\overline{SS}$ pin control (see Figure 25-8). If CKE is clear, $\overline{SS}$ pin control is optional (see Figure 25-7).
3. While operated in SPI Client mode, the SMP bit must remain clear.

Figure 25-6. Client Select Synchronous Waveform

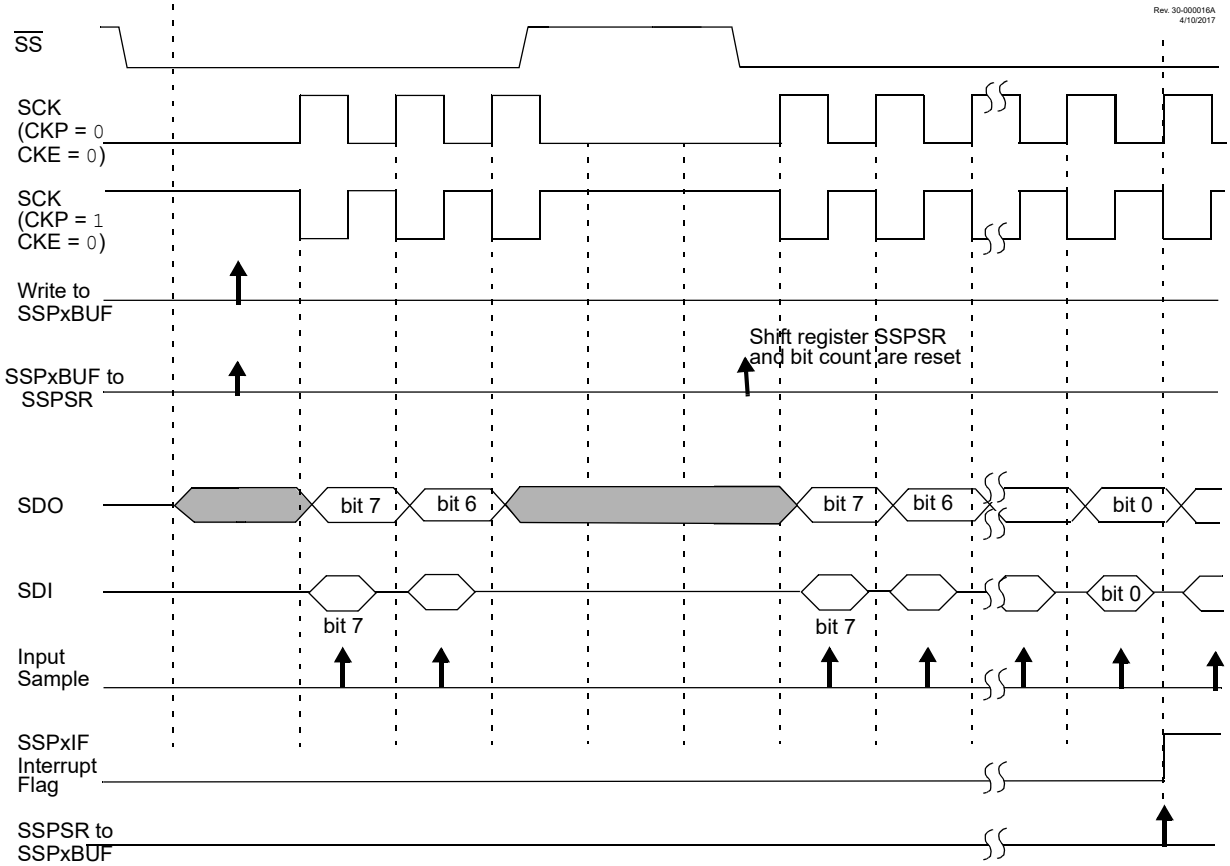

Figure 25-7. SPI Mode Waveform (Client Mode with CKE = 0)

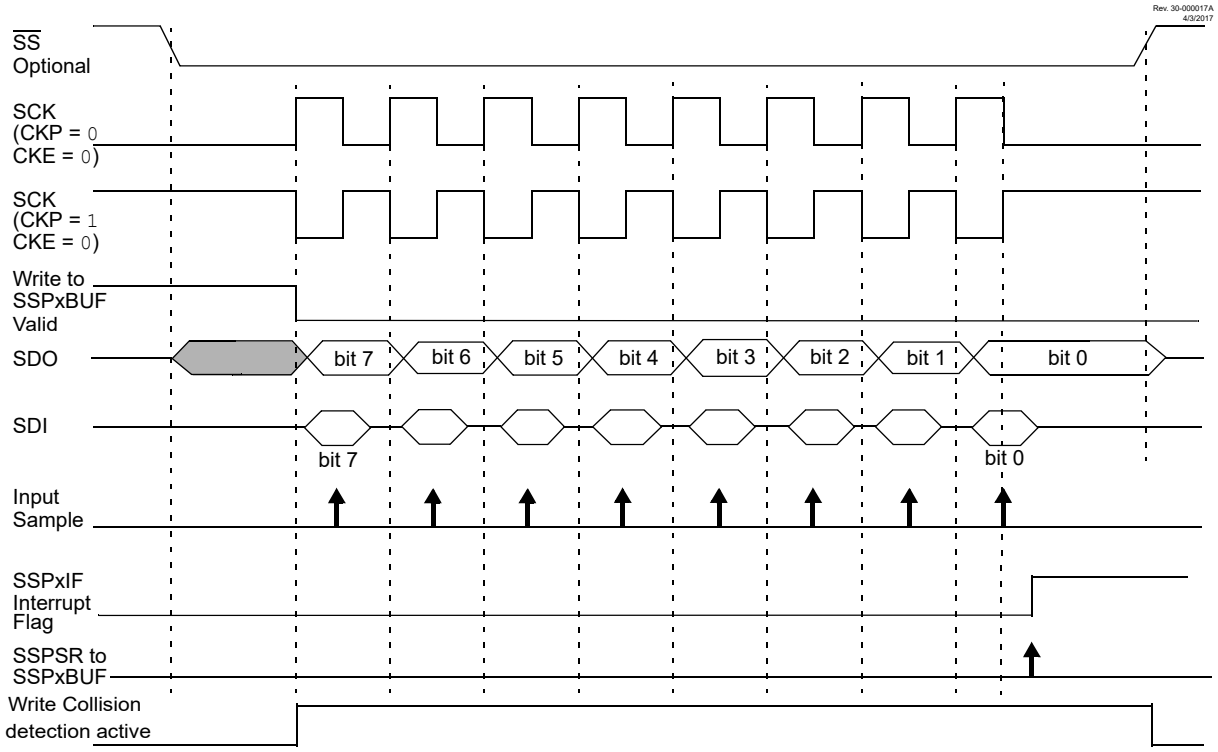

Figure 25-8. SPI Mode Waveform (Client Mode with CKE = 1)

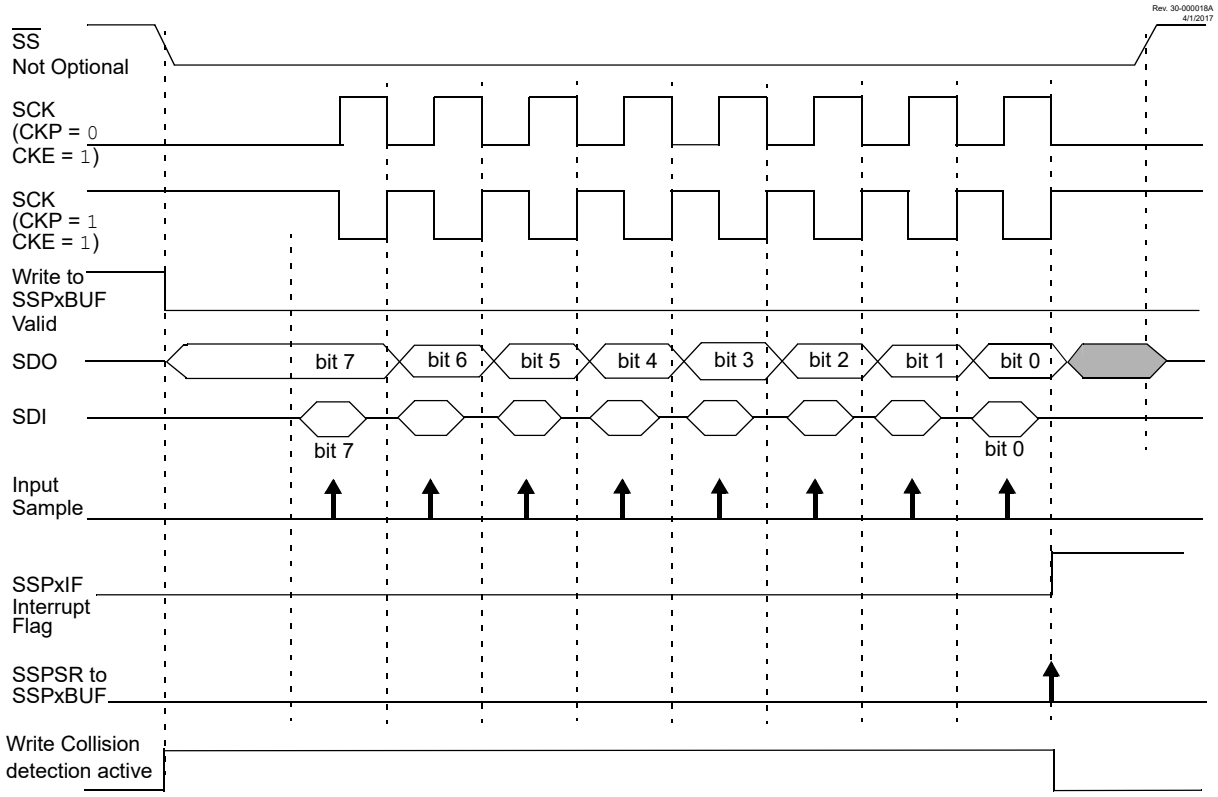

25.1.2.5 SPI Operation in Sleep Mode

In SPI Host mode, when the Sleep mode is selected, all module clocks are halted and the transmission/reception will remain in that state until the device wakes. After the device returns to Run mode, the module will resume transmitting and receiving data.

In SPI Client mode, the SPI Transmit/Receive Shift register operates asynchronously to the device. This allows the device to be placed in Sleep mode and data to be shifted into the SPI Transmit/Receive Shift register. When all eight bits have been received, the MSSP Interrupt Flag bit will be set and if enabled, will wake the device.

25.2 I²C Mode Overview

The Inter-Integrated Circuit (I²C) bus is a multi-host serial data communication bus. Devices communicate in a host/client environment where the host devices initiate the communication. A client device is controlled through addressing. Figure 25-9 and Figure 25-10 show block diagrams of the I²C Host and Client modes, respectively.

Figure 25-9. MSSP Block Diagram (I²C Host Mode)

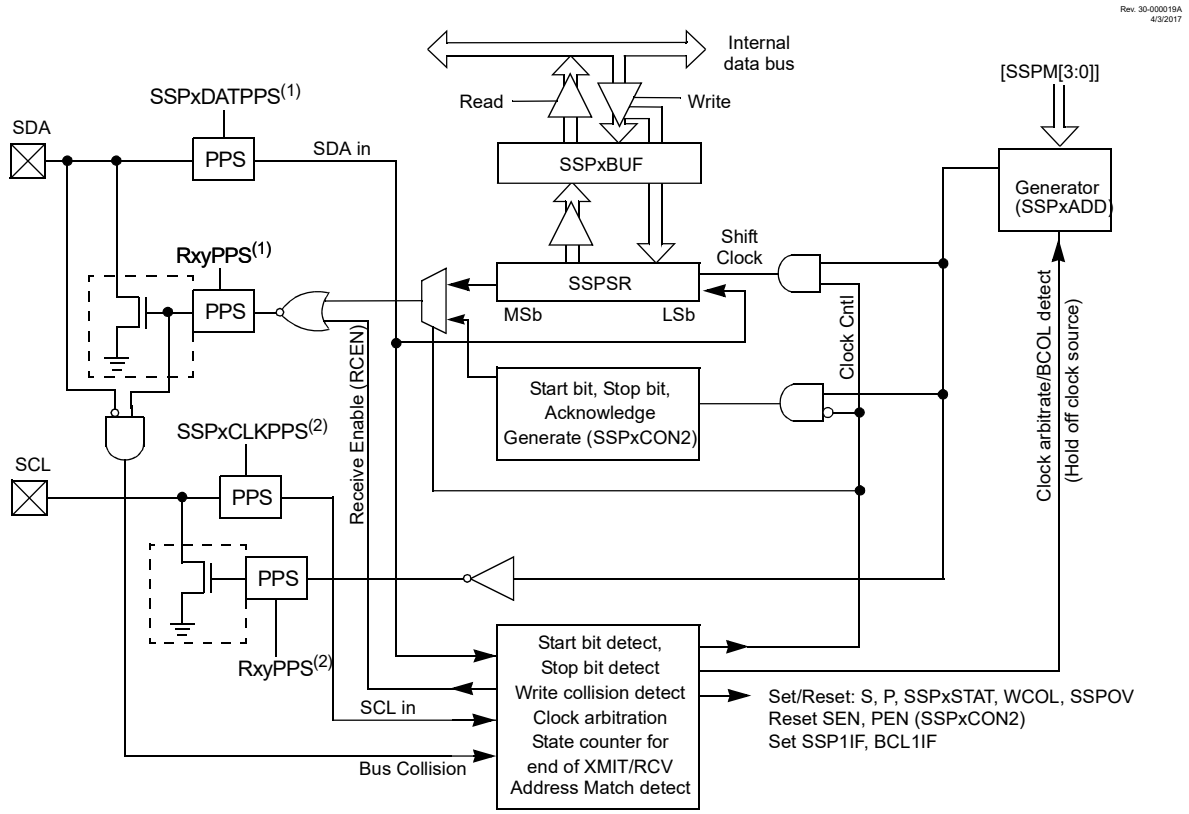

Notes: 1. SDA pin selections must be the same for input and output.

2. SCL pin selections must be the same for input and output.

Figure 25-10. MSSP Block Diagram (I²C Client Mode)

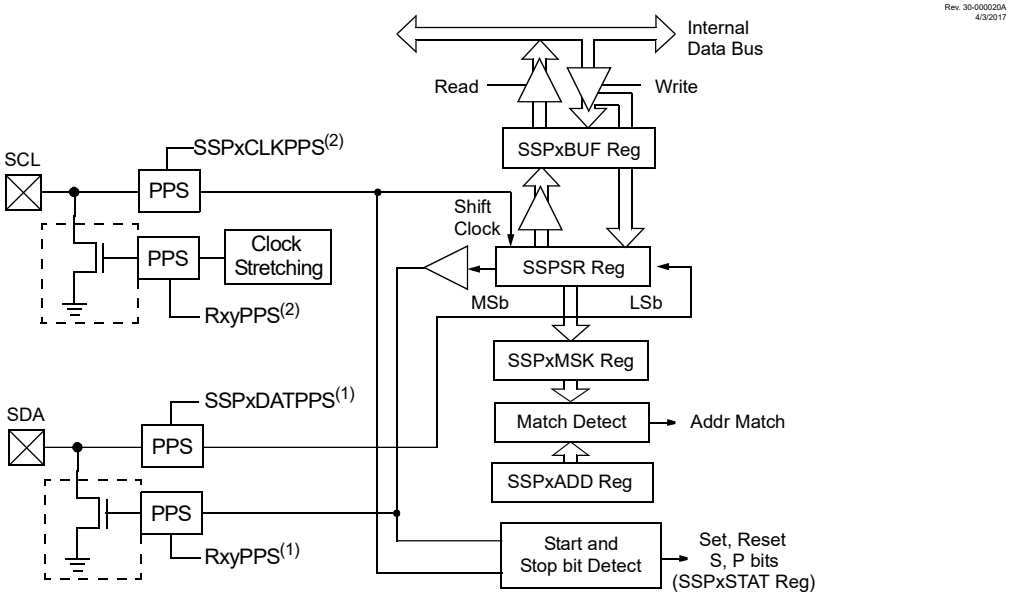

Notes: 1. SDA pin selections must be the same for input and output.
2. SCL pin selections must be the same for input and output.

The I²C bus specifies two signal connections:

- Serial Clock (SCL)
- Serial Data (SDA)

Both the SCL and SDA connections are bidirectional open-drain lines, each requiring pull-up resistors for the supply voltage. Pulling the line to ground is considered a logical zero and letting the line float is considered a logical one.

Figure 25-11 shows a typical connection between two processors configured as host and client devices.

Figure 25-11. I²C Host/Client Connection

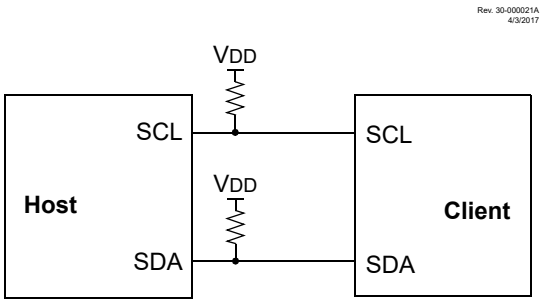

The I²C bus can operate with one or more host devices and one or more client devices.

There are four potential modes of operation for a given device:

- Host Transmit mode (host is transmitting data to a client)
- Host Receive mode (host is receiving data from a client)
- Client Transmit mode (client is transmitting data to a host)
- Client Receive mode (client is receiving data from the host)

To begin communication, the host device transmits a Start condition followed by the address byte of the client it intends to communicate with. A Start condition is indicated by a high-to-low transition of the SDA line while the SCL

line is held high. Address and data bytes are sent out, MSb first. This is followed by a single Read/$\overline{\text{Write}}$ Information (R/$\overline{\text{W}}$) bit, which determines whether the host intends to transmit to or receive data from the client device. The R/$\overline{\text{W}}$ bit is sent out as a logical one when the host intends to read data from the client, and is sent out as a logical zero when it intends to write data to the client.

If the requested client exists on the bus, it will respond with an Acknowledge sequence, otherwise known as an $\overline{\text{ACK}}$. The Acknowledge sequence is an active-low signal, which holds the SDA line low to indicate to the transmitter that the client device has received the transmitted data and is ready to receive more. The host then continues to either transmit to or receive data from the client.

The transition of a data bit is always performed while the SCL line is held low. Transitions that occur while the SCL line is held high are used to indicate Start and Stop conditions.

If the host intends to write to the client, then it repeatedly sends out a byte of data, with the client responding after each byte with an $\overline{\text{ACK}}$ sequence. In this example, the host device is in Host Transmit mode and the client is in Client Receive mode.

If the host intends to read from the client, then it repeatedly receives a byte of data from the client, and responds after each byte with an $\overline{\text{ACK}}$ sequence. In this example, the host device is in Host Receive mode and the client is in Client Transmit mode.

On the last byte of data communicated, the host device may end the transmission by sending a Stop condition. If the host device is in Receive mode, it sends the Stop condition in place of the last $\overline{\text{ACK}}$ sequence. A Stop condition is indicated by a low-to-high transition of the SDA line while the SCL line is held high.

In some cases, the host may want to maintain control of the bus and re-initiate another transmission. If so, the host device may send a Restart condition in place of the Stop condition or last $\overline{\text{ACK}}$ sequence when it is in Receive mode.

The I^{2}C bus specifies three message protocols:

- Single message where a host writes data to a client.
- Single message where a host reads data from a client.
- Combined message where a host initiates a minimum of two writes, or two reads, or a combination of writes and reads, to one or more clients.

25.2.1 I^{2}C Mode Registers

The MSSP module has eight registers for I^{2}C operation.

These are:

- MSSP Status Register (SSPxSTAT)
- MSSP Control 1 Register (SSPxCON1)
- MSSP Control 2 Register (SSPxCON2)
- MSSP Control 3 Register (SSPxCON3)
- Serial Receive/Transmit Buffer Register (SSPxBUF)
- MSSP Address Register (SSPxADD)
- I^{2}C Client Address Mask Register (SSPxMSK)
- MSSP Shift (SSPSR) register – not directly accessible

SSPxCON1, SSPxCON2, SSPxCON3 and SSPxSTAT are the Control and Status registers in I^{2}C mode operation. The SSPxCON1, SSPxCON2 and SSPxCON3 registers are readable and writable. The lower six bits of the SSPxSTAT are read-only. The upper two bits of the SSPxSTAT are read/write. SSPxMSK holds the client address mask value used in address comparison. SSPxADD contains the client device address when the MSSP is configured in I^{2}C Client mode. When the MSSP is configured in Host mode, SSPxADD acts as the Baud Rate Generator reload value.

SSPSR is the shift register used for shifting data in or out. SSPxBUF is the buffer register to which data bytes are written to or read from. In receive operations, SSPSR and SSPxBUF together, create a double-buffered receiver. When SSPSR receives a complete byte, it is transferred to SSPxBUF and the SSPxIF interrupt is set. During transmission, the SSPxBUF is not double-buffered. A write to SSPxBUF will write to both SSPxBUF and SSPSR.

© 2020-2022 Microchip Technology Inc.
and its subsidiaries

25.2.2 I²C Mode Operation

All MSSP I²C communication is byte oriented and shifted out MSb first. Eight SFR registers and two interrupt flags interface the module with the PIC® microcontroller and user software. Two pins, SDA and SCL, are exercised by the module to communicate with other external I²C devices.

25.2.2.1 Definition of I²C Terminology

There is language and terminology in the description of I²C communication that have definitions specific to I²C. That word usage is defined below and may be used in the rest of this document without explanation. This table was adapted from the Philips/NXP I²C Specification.

Table 25-1. I²C Terminology

Term	Description
Transmitter	The device that shifts data out onto the bus
Receiver	The device that shifts data in from the bus
Host	The device that initiates a transfer, generates clock signals, and terminates a transfer
Client	The device addressed by the host
Multi-Host	A bus with more than one device that can initiate data transfers
Arbitration	Procedure to ensure that only one host at a time controls the bus. Winning arbitration ensures that the message is not corrupted.
Synchronization	Procedure to synchronize the clocks of two or more devices on the bus
Idle	No host is controlling the bus, and both SDA and SCL lines are high
Active	Any time one or more host devices are controlling the bus
Addressed Client	Client device that has received a matching address and is actively being clocked by a host
Matching Address	Address byte that is clocked into a client that matches the value stored in SSPxADD
Write Request	Client receives a matching address with the R/$\overline{W}$ bit clear, and is ready to clock in data
Read Request	Host sends an address byte with the R/$\overline{W}$ bit set, indicating that it wishes to clock data out of the client. This data is the next and all following bytes until a Restart or Stop.
Clock Stretching	When a device on the bus hold SCL low to stall communication
Bus Collision	Any time the SDA line is sampled low by the module while it is outputting and expected High state

25.2.2.2 Byte Format

All communication in I²C is done in 9-bit segments. A byte is sent from a host to a client or vice versa, followed by an Acknowledge sequence sent back. After the eighth falling edge of the SCL line, the device outputting data on the SDA changes that pin to an input and reads the Acknowledge value on the next clock pulse.

The clock signal, SCL, is provided by the host. Data is valid to change while the SCL signal is low, and sampled on the rising edge of the clock. Changes on the SDA line while the SCL line is high define special conditions on the bus, such as a Start or Stop condition.

25.2.2.3 SDA and SCL Pins

Selection of any I²C mode with the SSPEN bit set forces the SCL and SDA pins to be open-drain. These pins must be configured as inputs by setting the appropriate TRIS bits.

Important: Any device pin can be selected for SDA and SCL functions with the PPS peripheral. These functions are bidirectional. The SDA input is selected with the SSPxDATPPS registers. The SCL input is selected with the SSPxCLKPPS registers. Outputs are selected with the RxyPPS registers. It is the user's responsibility to make the selections so that both the input and the output for each function is on the same pin.

25.2.2.4 SDA Hold Time

The hold time of the SDA pin is selected by the SDA Hold Time Selection (SDAHT) bit. Hold time is the time SDA is held valid after the falling edge of SCL. Setting the SDAHT bit selects a longer 300 ns minimum hold time and may help buses with large capacitance.

25.2.2.5 Clock Stretching

Clock stretching occurs when a device on the bus holds the SCL line low, effectively pausing communication. The client may stretch the clock to allow more time to handle data or prepare a response for the host device. A host device is not concerned with stretching as anytime it is active on the bus and not transferring data it is stretching. Any stretching done by a client is invisible to the host software and handled by the hardware that generates SCL.

The CKP bit is used to control stretching in software. Any time the CKP bit is cleared, the module will wait for the SCL line to go low and then hold it. Setting CKP will release SCL and allow more communication.

25.2.2.6 Arbitration

Each host device must monitor the bus for Start and Stop conditions. If the device detects that the bus is busy, it cannot begin a new message until the bus returns to an Idle state.

However, two host devices may try to initiate a transmission on or about the same time. When this occurs, the process of arbitration begins. Each transmitter checks the level of the SDA data line and compares it to the level that it expects to find. The first transmitter to observe that the two levels do not match, loses arbitration, and must stop transmitting on the SDA line.

For example, if one transmitter holds the SDA line to a logical one (lets SDA float) and a second transmitter holds it to a logical zero (pulls SDA low), the result is that the SDA line will be low. The first transmitter then observes that the level of the line is different than expected and concludes that another transmitter is communicating.

The first transmitter to notice this difference is the one that loses arbitration and must stop driving the SDA line. If this transmitter is also a host device, it also must stop driving the SCL line. It then can monitor the lines for a Stop condition before trying to reissue its transmission. In the meantime, the other device that has not noticed any difference between the expected and actual levels on the SDA line continues with its original transmission. It can do so without any complications, because so far, the transmission appears exactly as expected with no other transmitter disturbing the message.

Client Transmit mode can also be arbitrated, when a host addresses multiple clients, but this is less common.

25.2.2.7 Start Condition

The I^2C Specification defines a Start condition as a transition of SDA from a High to a Low state while SCL line is high. A Start condition is always generated by the host and signifies the transition of the bus from an Idle to an Active state. Figure 25-12 shows wave forms for Start and Stop conditions.

A bus collision can occur on a Start condition if the module samples the SDA line low before asserting it low. This does not conform to the I^2C Specification that states no bus collision can occur on a Start.

25.2.2.8 Stop Condition

A Stop condition is a transition of the SDA line from Low-to-High state while the SCL line is high.

Important: At least one SCL low time must appear before a Stop is valid, therefore, if the SDA line goes low then high again while the SCL line stays high, only the Start condition is detected.

Figure 25-12. I²C Start and Stop Conditions

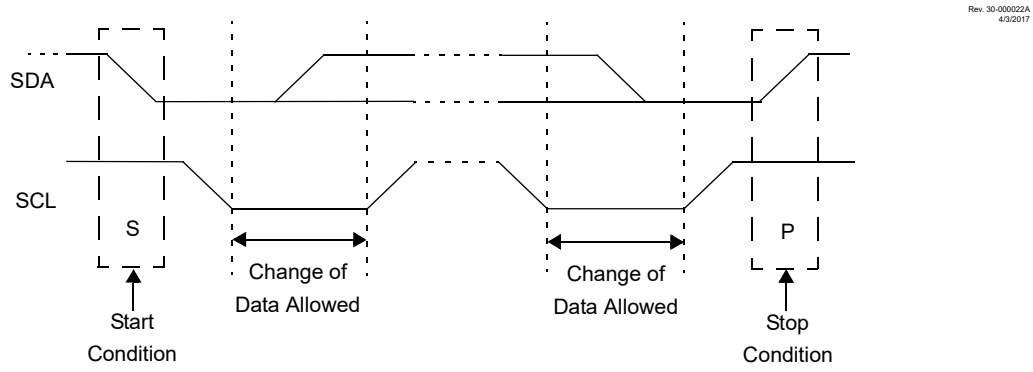

25.2.2.9 Start/Stop Condition Interrupt Masking

The Start Condition Interrupt Enable (SCIE) and Stop Condition Interrupt Enable (PCIE) bits can enable the generation of an interrupt in Client modes that do not typically support this function. These bits will have no effect in Client modes where interrupt on Start and Stop detect are already enabled.

25.2.2.10 Restart Condition

A Restart condition is valid any time that a Stop is valid. A host can issue a Restart if it wishes to hold the bus after terminating the current transfer. A Restart has the same effect on the client that a Start would, resetting all client logic and preparing it to clock in an address. The host may want to address the same or another client. Figure 25-13 shows the waveform for a Restart condition.

In 10-bit Addressing Client mode, a Restart is required for the host to clock data out of the addressed client. Once a client has been fully addressed, matching both high and low address bytes, the host can issue a Restart and the high address byte with the R/$\overline{W}$ bit set. The client logic will then hold the clock and prepare to clock out data.

Figure 25-13. I²C Restart Condition

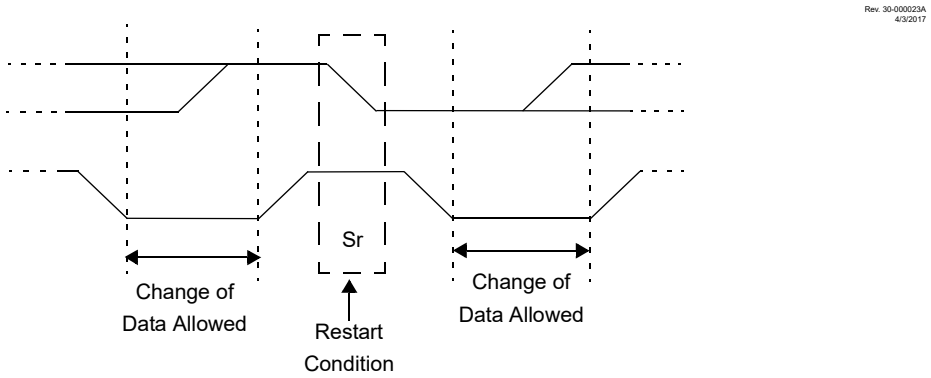

25.2.2.11 Acknowledge Sequence

The ninth SCL pulse for any transferred byte in I²C is dedicated as an Acknowledge sequence ($\overline{ACK}$). It allows receiving devices to respond back to the transmitter by pulling the SDA line low. The transmitter must release control of the line during this time to shift in the response. The Acknowledge ($\overline{ACK}$) is an active-low signal, pulling the SDA line low indicates to the transmitter that the device has received the transmitted data and is ready to receive more.

The result of an $\overline{ACK}$ is placed in the Acknowledge Status (ACKSTAT) bit.

The client software, when the Address Hold Enable (AHEN) and Data Hold Enable (DHEN) bits are set, allows the user to select the $\overline{ACK}$ value sent back to the transmitter. The Acknowledge Data (ACKDT) bit is set/cleared to determine the response.

The client hardware will generate an $\overline{ACK}$ response under most circumstances. However, if the BF bit or the Receive Overflow Indicator (SSPOV) bit are set when a byte is received then the $\overline{ACK}$ will not be sent by the client.

When the module is addressed, after the eighth falling edge of SCL on the bus, the Acknowledge Time Status (ACKTIM) bit is set. The ACKTIM bit indicates the acknowledge time of the active bus. The ACKTIM bit is only active when either the AHEN bit or DHEN bit is enabled.

25.2.3 I²C Client Mode Operation

The MSSP Client mode operates in one of four modes selected by the MSSP Mode Select (SSPM) bits. The modes can be divided into 7-bit and 10-bit Addressing mode. 10-bit Addressing modes operate the same as 7-bit with some additional overhead for handling the larger addresses.

Modes with Start and Stop condition interrupts operate the same as the other modes with SSPxIF additionally getting set upon detection of a Start, Restart, or Stop condition.

25.2.3.1 Client Mode Addresses

The SSPxADD register contains the Client mode address. The first byte received after a Start or Restart condition is compared against the value stored in this register. If the byte matches, the value is loaded into the SSPxBUF register and an interrupt is generated. If the value does not match, the module goes Idle and no indication is given to the software that anything happened.

The SSPxMSK register affects the address matching process. See 25.2.3.5. SSP Mask Register for more information.

25.2.3.1.1 I²C Client 7-Bit Addressing Mode

In 7-bit Addressing mode, the LSb of the received data byte is ignored when determining if there is an address match.

25.2.3.1.2 I²C Client 10-Bit Addressing Mode

In 10-bit Addressing mode, the first received byte is compared to the binary value of ‘1 1 1 1 0 A9 A8 0’. A9 and A8 are the two MSbs of the 10-bit address and stored in bits 2 and 1 of the SSPxADD register.

After the acknowledge of the high byte the Update Address (UA) bit is set and SCL is held low until the user updates SSPxADD with the low address. The low address byte is clocked in and all eight bits are compared to the low address value in SSPxADD. Even if there is not an address match; SSPxIF and UA are set, and SCL is held low until SSPxADD is updated to receive a high byte again. When SSPxADD is updated the UA bit is cleared. This ensures the module is ready to receive the high address byte on the next communication.

A high and low address match as a write request is required at the start of all 10-bit addressing communication. A transmission can be initiated by issuing a Restart once the client is addressed and clocking in the high address with the R/$\overline{W}$ bit set. The client hardware will then acknowledge the read request and prepare to clock out data. This is only valid for a client after it has received a complete high and low address byte match.

25.2.3.2 Clock Stretching

Clock stretching occurs when a device on the bus holds the SCL line low, effectively pausing communication. The client may stretch the clock to allow more time to handle data or prepare a response for the host device. A host device is not concerned with stretching as anytime it is active on the bus and not transferring data it is stretching. Any stretching done by a client is invisible to the host software and handled by the hardware that generates SCL.

The CKP bit is used to control stretching in software. Any time the CKP bit is cleared, the module will wait for the SCL line to go low and then hold it. Setting CKP will release SCL and allow more communication.

25.2.3.2.1 Normal Clock Stretching

Following an $\overline{ACK}$ if the R/$\overline{W}$ bit is set (a read request), the client hardware will clear CKP. This allows the client time to update SSPxBUF with data to transfer to the host. If the Stretch Enable (SEN) bit is set, the client hardware will always stretch the clock after the $\overline{ACK}$ sequence. Once the client is ready; CKP is set by software and communication resumes.

25.2.3.2.2 10-Bit Addressing Mode

In 10-bit Addressing mode, when the UA bit is set, the clock is always stretched. This is the only time the SCL is stretched without CKP being cleared. SCL is released immediately after a write to SSPxADD.

25.2.3.2.3 Byte NACKing

When the AHEN bit is set, CKP is cleared by hardware after the eighth falling edge of SCL for a received matching address byte. When the DHEN bit is set, CKP is cleared after the eighth falling edge of SCL for received data.

Stretching after the eighth falling edge of SCL allows the client to look at the received address or data and decide if it wants to acknowledge ($\overline{ACK}$) the received address or data, or not acknowledge (NACK) the address or data.

25.2.3.3 Clock Synchronization and the CKP Bit

Any time the CKP bit is cleared, the module will wait for the SCL line to go low and then hold it. However, clearing the CKP bit will not assert the SCL output low until the SCL output is already sampled low. Therefore, the CKP bit will not assert the SCL line until an external I^{2}C host device has already asserted the SCL line. The SCL output will remain low until the CKP bit is set and all other devices on the I^{2}C bus have released SCL.

25.2.3.4 General Call Address Support

The addressing procedure for the I^{2}C bus is such that the first byte after the Start condition usually determines which device will be the client addressed by the host device. The exception is the General Call address that can address all devices. When this address is used, all devices must, in theory, respond with an $\overline{ACK}$.

The general call address is a reserved address in the I^{2}C protocol, defined as address 0x00. When the General Call Enable (GCEN) bit is set, the client module will automatically $\overline{ACK}$ the reception of this address regardless of the value stored in SSPxADD. After the client clocks in an address of all zeros with the R/$\overline{W}$ bit clear, an interrupt is generated and client software can read SSPxBUF and respond. Figure 25-14 shows a General Call reception sequence.

Figure 25-14. Client Mode General Call Address Sequence

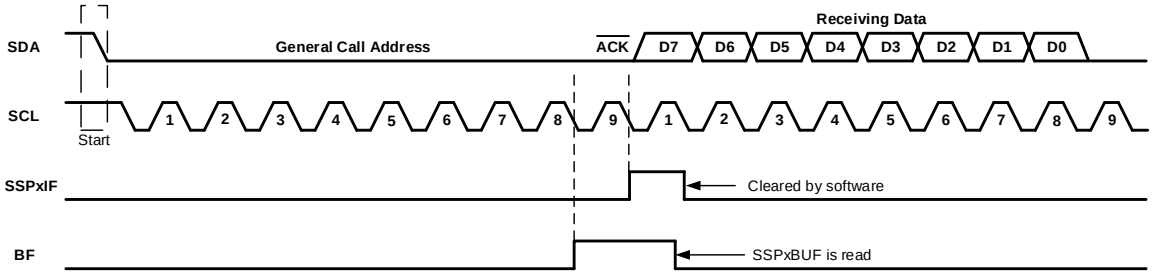

In 10-bit Address mode, the UA bit will not be set on the reception of the general call address. The client will prepare to receive the second byte as data, just as it would in 7-bit mode.

If the AHEN bit is set, just as with any other address reception, the client hardware will stretch the clock after the eighth falling edge of SCL. The client must then set its Acknowledge Sequence Enable (ACKEN) bit and release the clock.

25.2.3.5 SSP Mask Register

The MSSP Mask (SSPxMSK) register is available in I^{2}C Client mode as a mask for the value held in the SSPSR register during an address comparison operation. A zero ('0') bit in the SSPxMSK register has the effect of making the corresponding bit of the received address a "don't care".

This register is reset to all '1's upon any Reset condition and, therefore, has no effect on standard MSSP operation until written with a mask value.

SSPxMSK is active during:

- 7-bit Address mode: Address compare of A[7:1]
- 10-bit Address mode: Address compare of A[7:0] only. The MSSP mask has no effect during the reception of the first (high) byte of the address.

25.2.3.6 Client Reception

When the R/$\overline{W}$ bit of a matching received address byte is clear, the R/$\overline{W}$ bit is cleared. The received address is loaded into the SSPxBUF register and acknowledged.

When the Overflow condition exists for a received address, a Not Acknowledge (NACK) is transmitted and the Receive Overflow Indicator (SSPOV) bit is set. The Buffer Override Enable (BOEN) bit modifies this operation.

An MSSP interrupt is generated for each transferred data byte. The SSPxIF flag bit must be cleared by software.

When the SEN bit is set, SCL will be held low (clock stretch) following each received byte. The clock must be released by setting the CKP bit, except sometimes in 10-bit mode. See 25.2.3.2.2. 10-Bit Addressing Mode for more details.

25.2.3.6.1 7-Bit Addressing Reception

This section describes a standard sequence of events for the MSSP module configured as an I^2C client in 7-bit Addressing mode. Figure 25-15 and Figure 25-16 are used as a visual reference for this description.

This is a step by step process of what typically must be done to accomplish I^2C communication.

1. Start condition detected.
2. The Start (S) bit is set; SSPxIF is set if the Start Condition Interrupt Enable (SCIE) bit is set.
3. Matching address with R/$\overline{W}$ bit clear is received.
4. The client pulls SDA low, sending an $\overline{ACK}$ to the host, and sets SSPxIF bit.
5. Software clears the SSPxIF bit.
6. Software reads received address from SSPxBUF, clearing the BF flag.
7. If SEN = `1`; Client software sets the CKP bit to release the SCL line.
8. The host clocks out a data byte.
9. Client drives SDA low, sending an $\overline{ACK}$ to the host, and sets SSPxIF bit.
10. Software clears SSPxIF.
11. Software reads the received byte from SSPxBUF, clearing BF.
12. Steps 8-12 are repeated for all received bytes from the host.
13. Host sends Stop condition, setting the Stop (P) bit, and the bus goes Idle.

Figure 25-15. I²C Client, 7-Bit Address, Reception (SEN = 0, AHEN = 0, DHEN = 0)

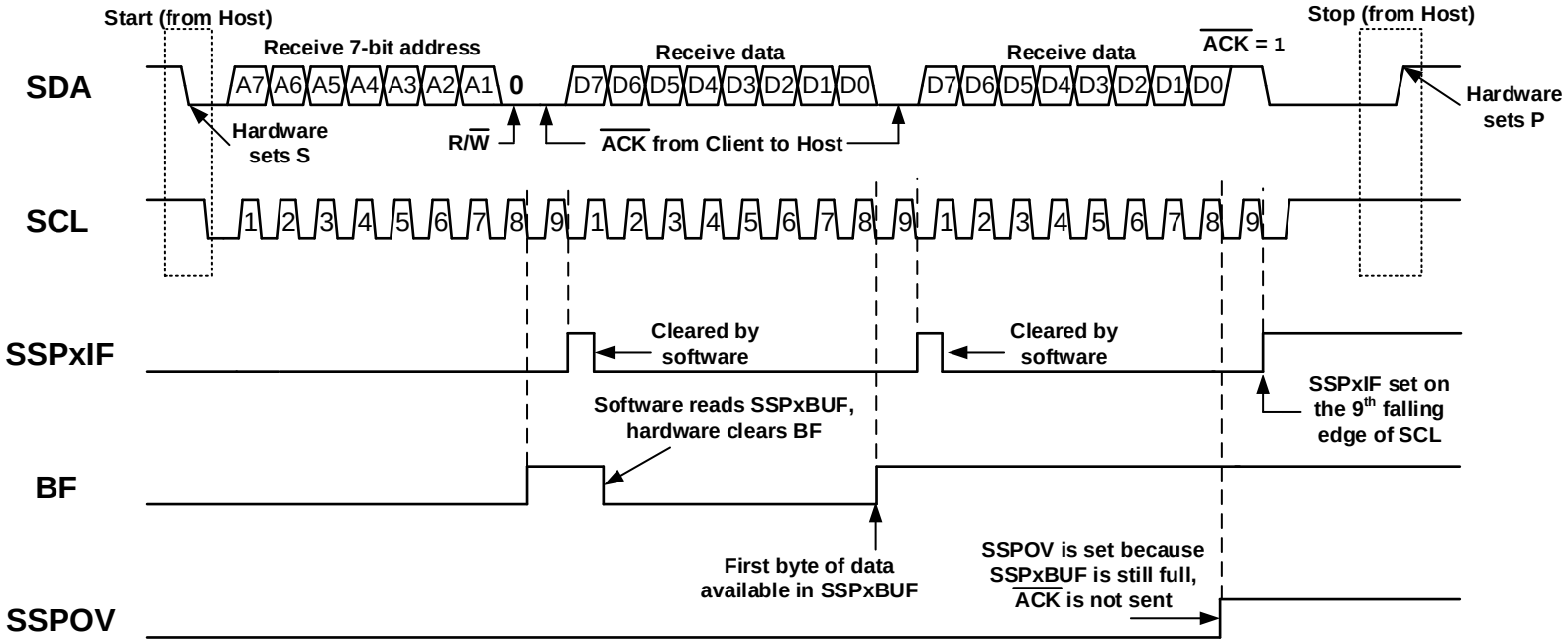

Figure 25-16. I²C Client, 7-Bit Address, Reception (SEN = 1, AHEN = 0, DHEN = 0)

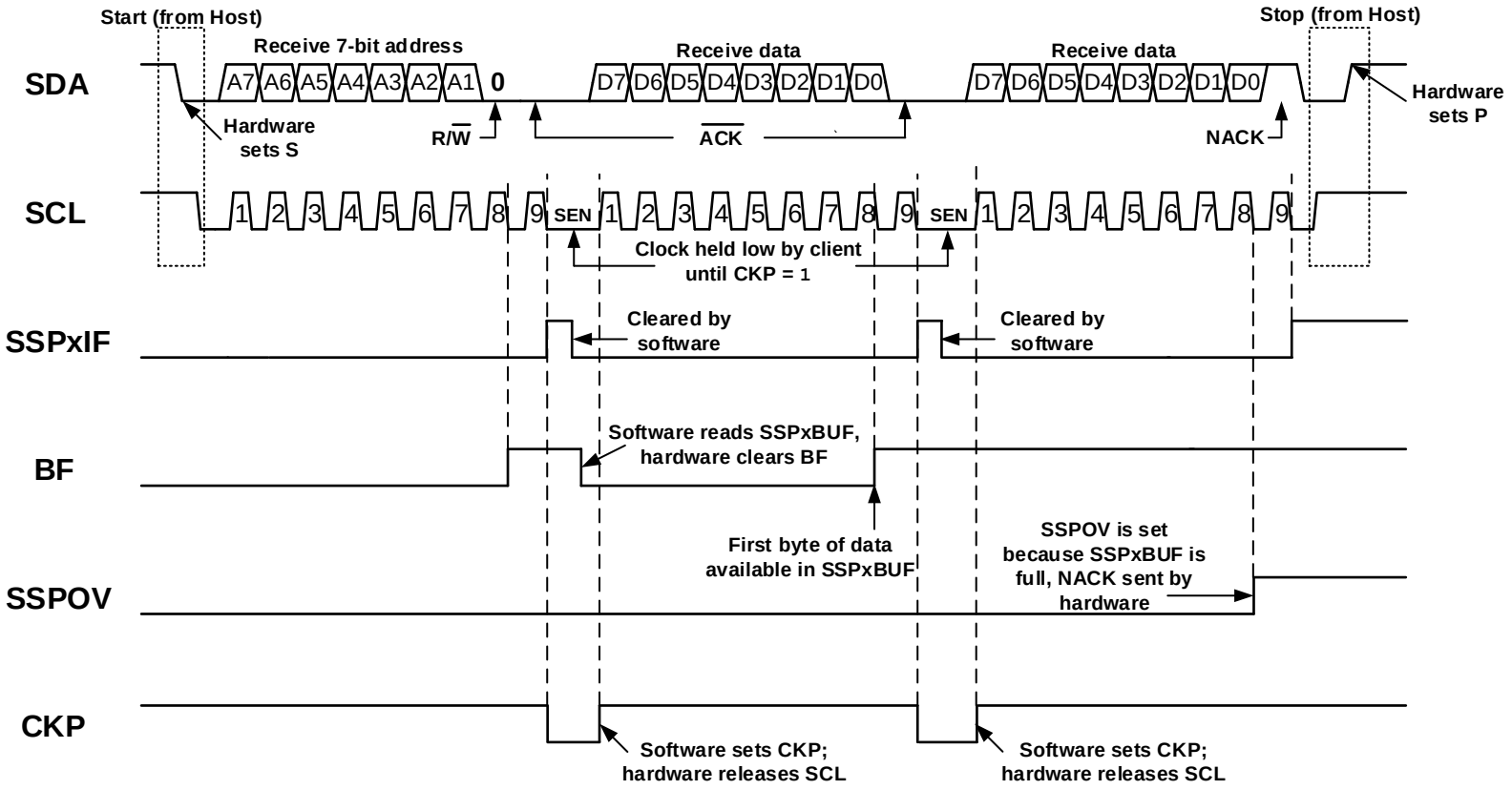

25.2.3.6.2 7-Bit Reception with AHEN and DHEN

Client device reception with AHEN and DHEN set operate the same as without these options with extra interrupts and clock stretching added after the eighth falling edge of SCL. These additional interrupts allow the client software to decide whether it wants to $\overline{ACK}$ the receive address or data byte, rather than the hardware. This functionality adds support for PMBus™ that was not present on previous versions of this module.

This list describes the steps that need to be taken by client software to use these options for I^2C communication. Figure 25-17 displays a module using both address and data holding. Figure 25-18 includes the operation with the SEN bit set.

1. The Start (S) bit is set; SSPxIF is set if SCIE is set.
2. Matching address with the R/$\overline{W}$ bit clear is clocked in. SSPxIF is set and CKP cleared after the eighth falling edge of SCL.
3. Software clears the SSPxIF.
4. Client can look at the ACKTIM bit to determine if the SSPxIF was after or before the $\overline{ACK}$.
5. Client reads the address value from SSPxBUF, clearing the BF flag.
6. Client transmits an $\overline{ACK}$ to the host by clearing ACKDT.
7. Client releases the clock by setting CKP.
8. SSPxIF is set after an $\overline{ACK}$, not after a NACK.
9. If SEN = `1`, the client hardware will stretch the clock after the $\overline{ACK}$.
10. Client clears SSPxIF.

Important: SSPxIF is still set after the ninth falling edge of SCL even if there is no clock stretching and BF has been cleared. Only if a NACK is sent to the host is SSPxIF not set.

11. SSPxIF is set and CKP cleared after eighth falling edge of SCL for a received data byte.
12. Client looks at the ACKTIM bit to determine the source of the interrupt.
13. Client reads the received data from SSPxBUF, clearing BF.
14. Steps 7-14 are the same for each received data byte.
15. Communication is ended by either the client sending a NACK, or the host sending a Stop condition. If a Stop is sent and the Stop Condition Interrupt Enable (PCIE) bit is clear, the client will only know by polling the Stop (P) bit.

Figure 25-17. I²C Client, 7-Bit Address, Reception (SEN = 0, AHEN = 1, DHEN = 1)

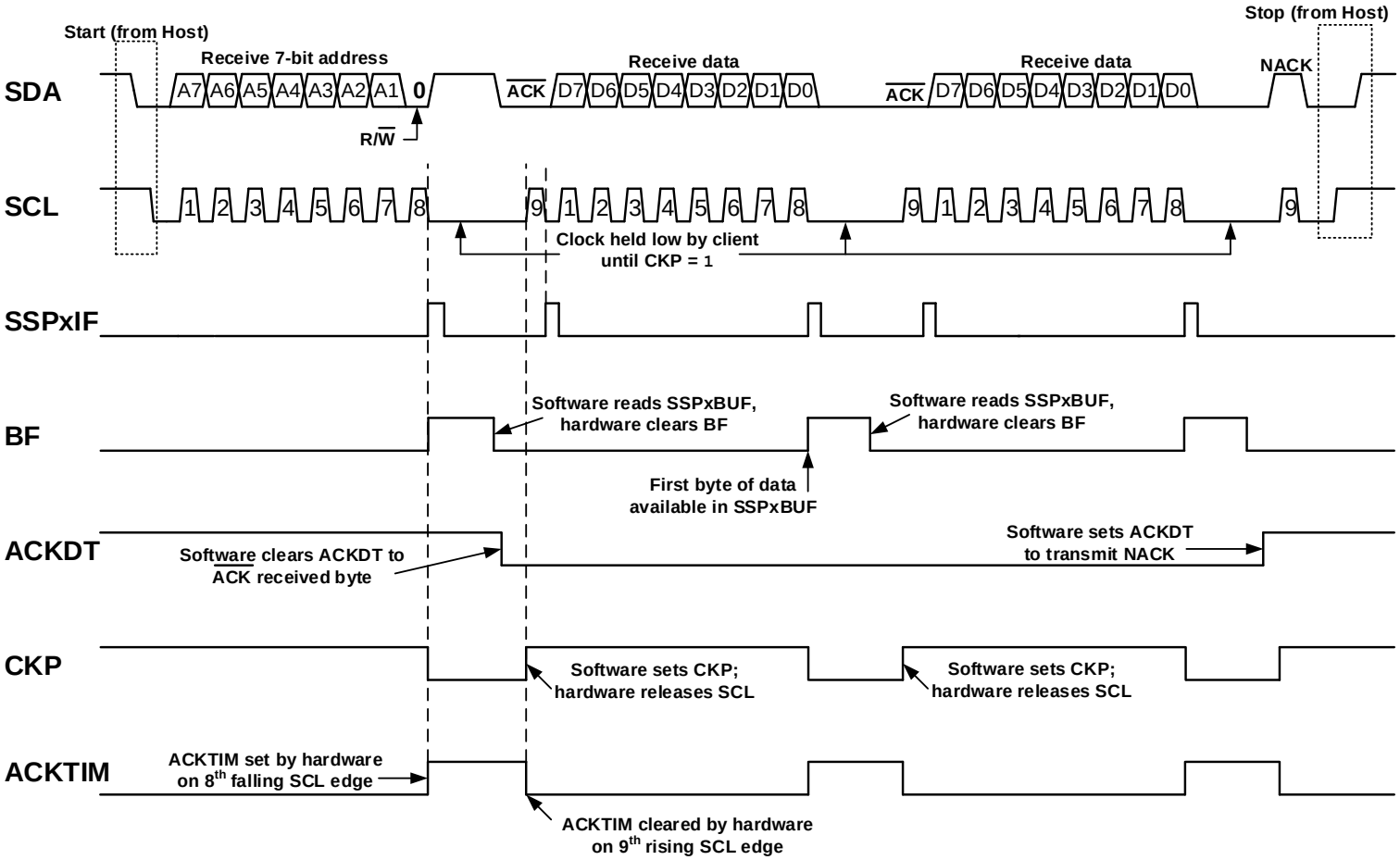

© 2020-2022 Microchip Technology Inc. and its subsidiaries

Figure 25-18. I²C Client, 7-Bit Address, Reception (SEN = 1, AHEN = 1, DHEN = 1)

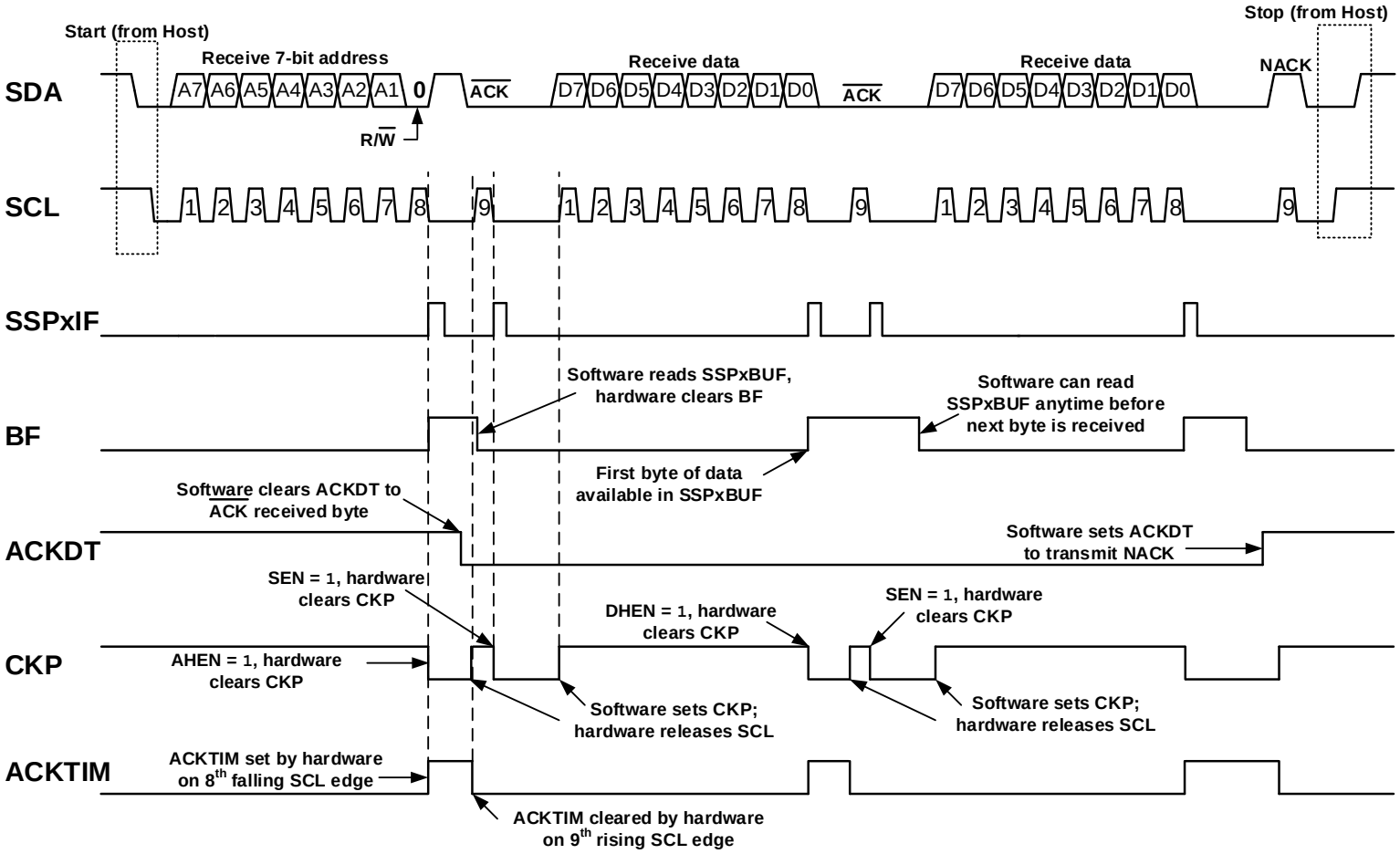

25.2.3.6.3 Client Mode 10-Bit Address Reception

This section describes a standard sequence of events for the MSSP module configured as an I^2C client in 10-bit Addressing mode. Figure 25-19 shows a standard waveform for a client receiver in 10-bit Addressing mode with clock stretching enabled.

This is a step-by-step process of what must be done by the client software to accomplish I^2C communication.

1. Bus starts Idle.
2. Host sends Start condition; S bit is set; SSPxIF is set if SCIE is set.
3. Host sends matching high address with the R/$\overline{W}$ bit clear; the UA bit is set.
4. Client sends $\overline{ACK}$ and SSPxIF is set.
5. Software clears the SSPxIF bit.
6. Software reads received address from SSPxBUF, clearing the BF flag.
7. Client loads low address into SSPxADD, releasing SCL.
8. Host sends matching low address byte to the client; UA bit is set.

Important: Updates to the SSPxADD register are not allowed until after the $\overline{ACK}$ sequence.

9. Client sends $\overline{ACK}$ and SSPxIF is set.

Important: If the low address does not match, SSPxIF and UA are still set so that the client software can set SSPxADD back to the high address. BF is not set because there is no match. CKP is unaffected.

10. Client clears SSPxIF.
11. Client reads the received matching address from SSPxBUF, clearing BF.
12. Client loads high address into SSPxADD.
13. Host clocks a data byte to the client and clocks out the client $\overline{ACK}$ on the ninth SCL pulse; SSPxIF is set.
14. If the SEN bit is set, CKP is cleared by hardware and the clock is stretched.
15. Client clears SSPxIF.
16. Client reads the received byte from SSPxBUF, clearing BF.
17. If SEN is set the client software sets CKP to release the SCL.
18. Steps 13-17 repeat for each received byte.
19. Host sends Stop to end the transmission.

© 2020-2022 Microchip Technology Inc.
and its subsidiaries

Figure 25-19. I²C Client, 10-Bit Address, Reception (SEN = 1, AHEN = 0, DHEN = 0)

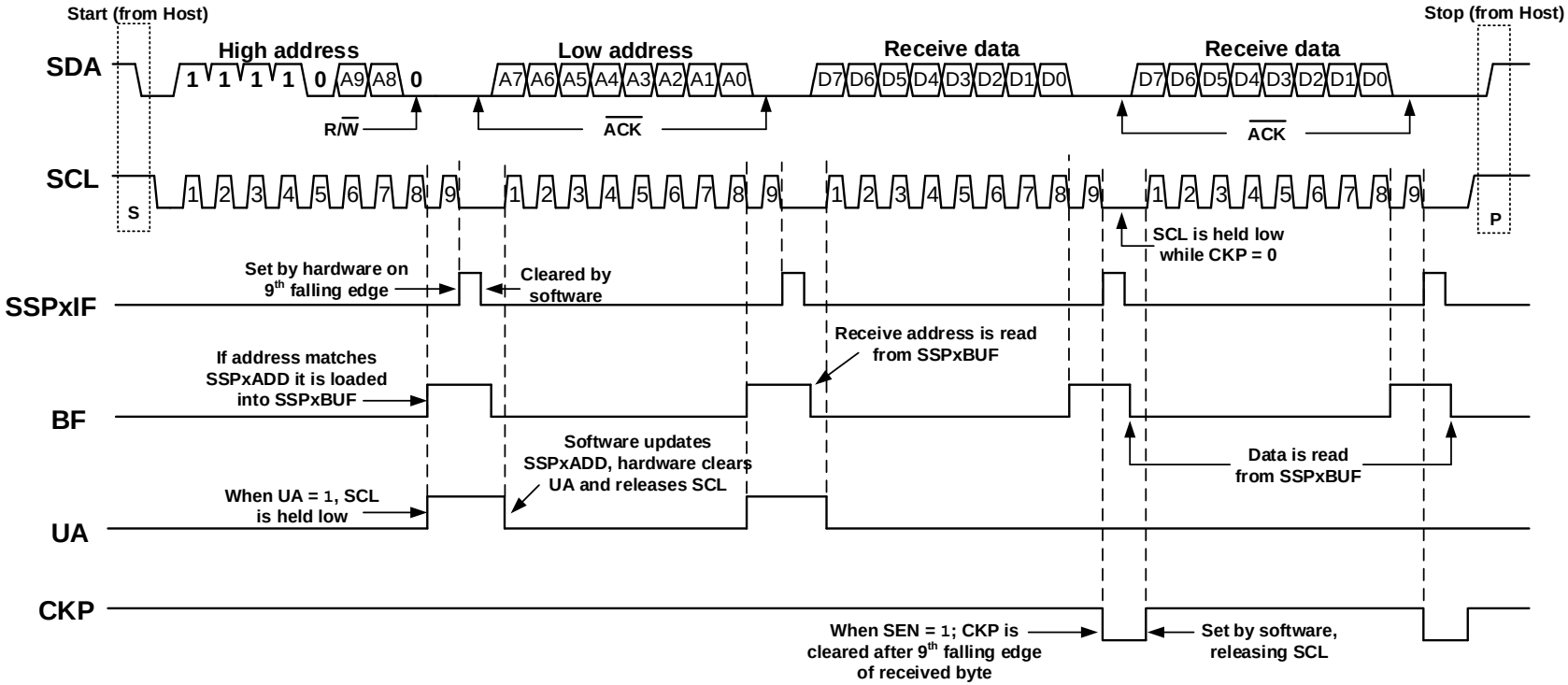

25.2.3.6.4 10-Bit Addressing with Address or Data Hold

Reception using 10-bit addressing with AHEN or DHEN set is the same as with 7-bit modes. The only difference is the need to update the SSPxADD register using the UA bit. All functionality, specifically when the CKP bit is cleared and SCL line is held low, are the same. Figure 25-20 can be used as a reference of a client in 10-bit addressing with AHEN set.

Figure 25-21 shows a standard waveform for a client transmitter in 10-bit Addressing mode.

Figure 25-20. I²C Client, 10-Bit Address, Reception (SEN = 0, AHEN = 1, DHEN = 0)

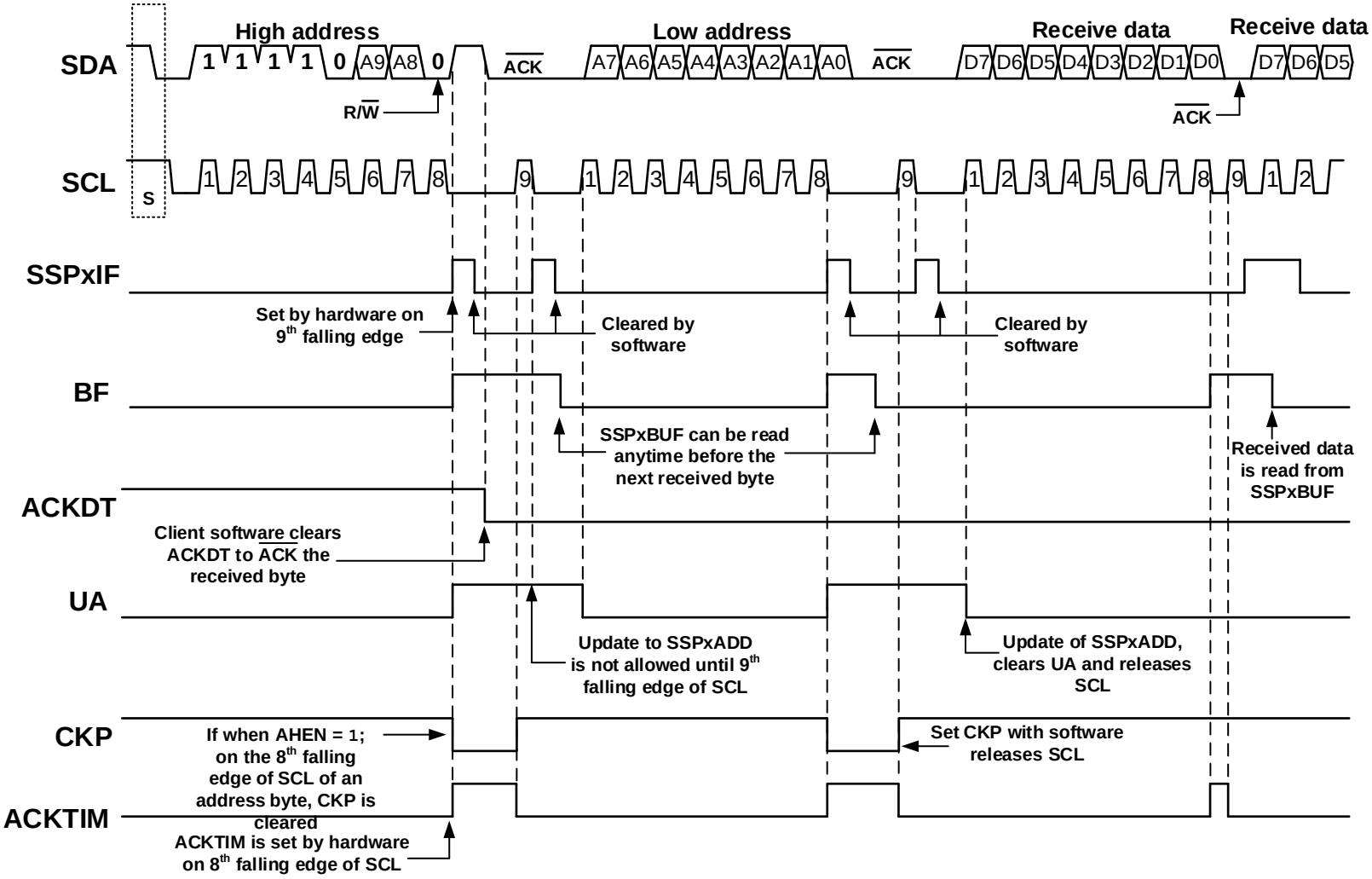

© 2020-2022 Microchip Technology Inc. and its subsidiaries

Figure 25-21. I²C Client, 10-Bit Address, Transmission (SEN = 0, AHEN = 0, DHEN = 0)

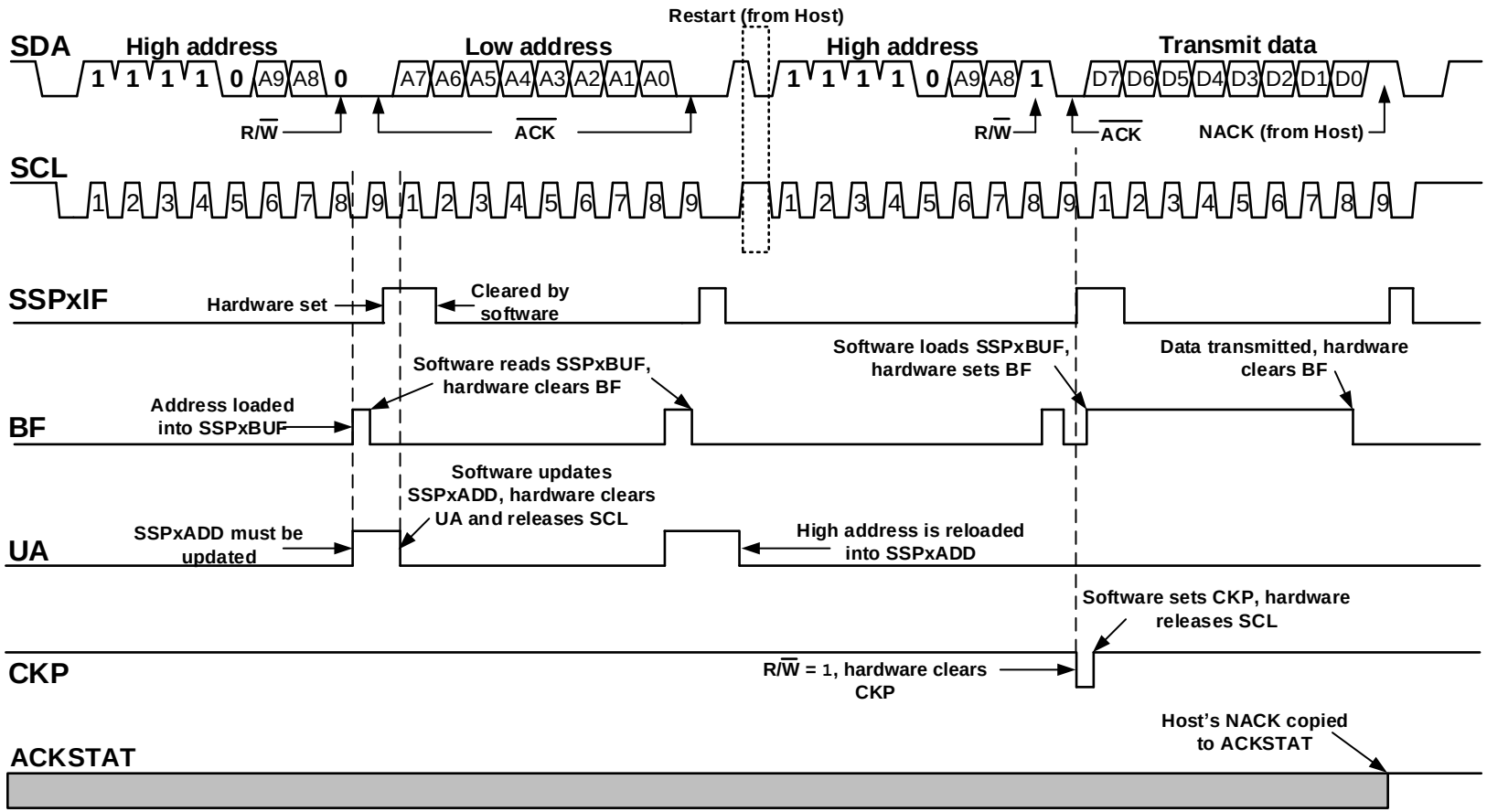

© 2020-2022 Microchip Technology Inc. and its subsidiaries

25.2.3.7 Client Transmission

When the R/$\overline{W}$ bit of the incoming address byte is set and an address match occurs, the R/$\overline{W}$ bit is set. The received address is loaded into the SSPxBUF register, and an $\overline{ACK}$ pulse is sent by the client on the ninth bit.

Following the $\overline{ACK}$, client hardware clears the CKP bit and the SCL pin is held low (see 25.2.2.5. Clock Stretching for more details). By stretching the clock, the host will be unable to assert another clock pulse until the client is done preparing the transmit data.

The transmit data must be loaded into the SSPxBUF register, which also loads the SSPSR register. Then the SCL pin will be released by setting the CKP bit. The eight data bits are shifted out on the falling edge of the SCL input. This ensures that the SDA signal is valid during the SCL high time.

The $\overline{ACK}$ pulse from the host receiver is latched on the rising edge of the ninth SCL input pulse. This $\overline{ACK}$ value is copied to the ACKSTAT bit. If ACKSTAT is set (NACK), then the data transfer is complete. In this case, when the NACK is latched by the client, the client goes Idle and waits for another occurrence of a Start condition. If the SDA line was low ($\overline{ACK}$), the next transmit data must be loaded into the SSPxBUF register. Again, the SCL pin must be released by setting bit CKP.

An MSSP interrupt is generated for each data transfer byte. The SSPxIF bit must be cleared by software and the SSPxSTAT register is used to determine the status of the byte. The SSPxIF bit is set on the falling edge of the ninth clock pulse.

25.2.3.7.1 Client Mode Bus Collision

A client receives a read request and begins shifting data out on the SDA line. If a bus collision is detected and the Client Mode Bus Collision Detect Enable (SBCDE) bit is set, the Bus Collision Interrupt Flag (BCLxIF) bit of the PIRx register is set. Once a bus collision is detected, the client goes Idle and waits to be addressed again. User software can use the BCLxIF bit to handle a client bus collision.

25.2.3.7.2 7-Bit Transmission

A host device can transmit a read request to a client, and then clock data out of the clien. The list below outlines what software for a client will need to do to accomplish a standard transmission. Figure 25-22 can be used as a reference to this list.

1. Host sends a Start condition.
2. The Start (S) bit is set; SSPxIF is set if SCIE is set.
3. Matching address with R/$\overline{W}$ bit set is received by the Client, setting SSPxIF bit.
4. Client hardware generates an $\overline{ACK}$ and sets SSPxIF.
5. The SSPxIF bit is cleared by software.
6. Software reads the received address from SSPxBUF, clearing BF.
7. R/$\overline{W}$ is set so CKP was automatically cleared after the $\overline{ACK}$.
8. The client software loads the transmit data into SSPxBUF.
9. CKP bit is set by software, releasing SCL, allowing the host to clock the data out of the client.
10. SSPxIF is set after the $\overline{ACK}$ response from the host is loaded into the ACKSTAT bit.
11. SSPxIF bit is cleared.
12. The client software checks the ACKSTAT bit to see if the host wants to clock out more data.

Important:
1. If the host $\overline{ACK}$s then the clock will be stretched.
2. ACKSTAT is the only bit updated on the rising edge of the ninth SCL clock instead of the falling edge.

13. Steps 9-13 are repeated for each transmitted byte.
14. If the host sends a not $\overline{ACK}$; the clock is not held, but SSPxIF is still set.
15. The host sends a Restart condition or a Stop.

Figure 25-22. I²C Client, 7-Bit Address, Transmission (AHEN = 0)

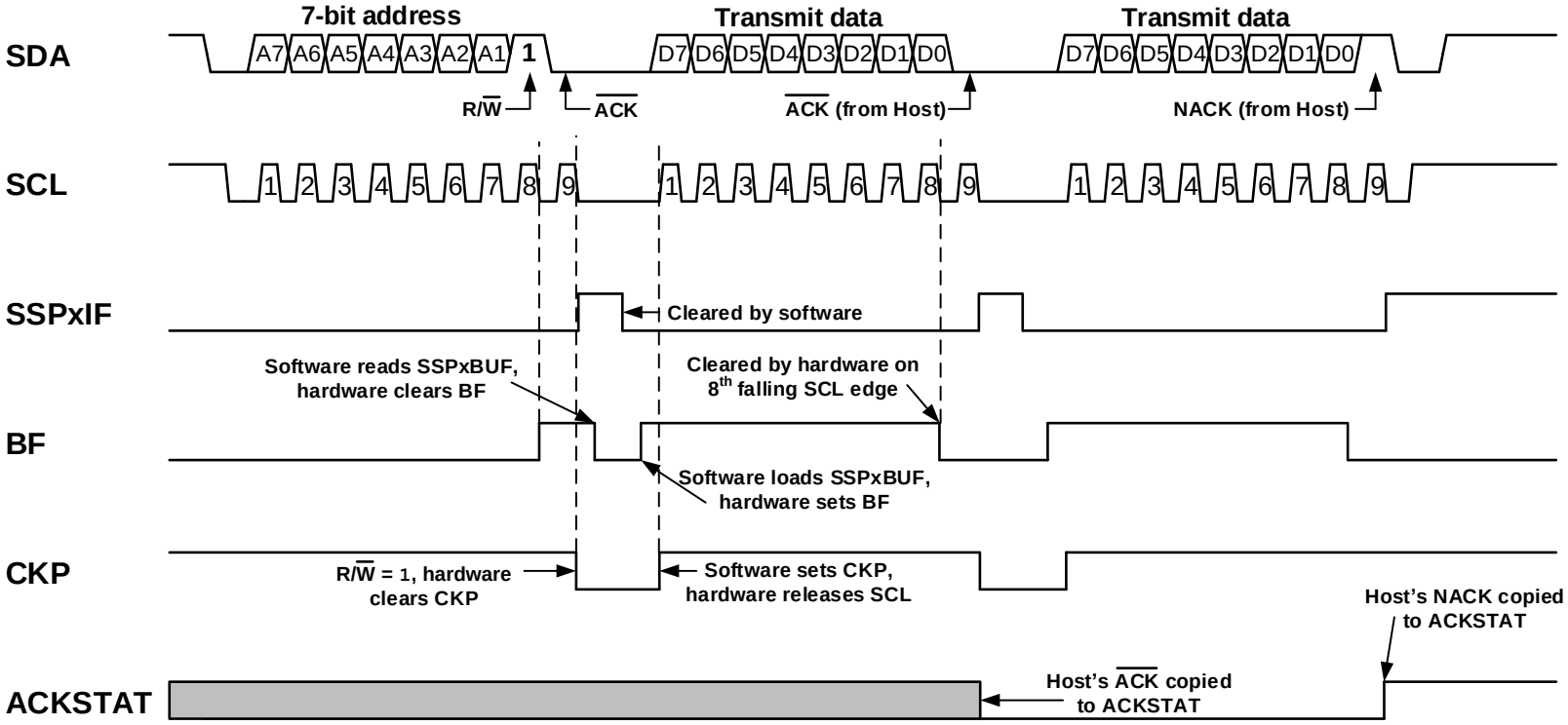

25.2.3.7.3 7-Bit Transmission with Address Hold Enabled

Setting the AHEN bit enables additional clock stretching and interrupt generation after the eighth falling edge of a received matching address. Once a matching address has been clocked in, CKP is cleared and the SSPxIF interrupt is set.

Figure 25-23 displays a standard waveform of a 7-bit address client transmission with AHEN enabled.

1. Bus starts Idle.
2. Host sends Start condition; the S bit is set; SSPxIF is set if SCIE is set.
3. Host sends matching address with the R/$\overline{W}$ bit set. After the eighth falling edge of the SCL line the CKP bit is cleared and SSPxIF interrupt is generated.
4. Client software clears SSPxIF.
5. Client software reads the ACKTIM, R/$\overline{W}$ and D/$\overline{A}$ bits to determine the source of the interrupt.
6. Client reads the address value from the SSPxBUF register, clearing the BF bit.
7. Client software decides from this information if it wishes to $\overline{ACK}$ or NACK and sets the ACKDT bit accordingly.
8. Client software sets the CKP bit, releasing SCL.
9. Host clocks in the $\overline{ACK}$ value from the client.
10. Client hardware automatically clears the CKP bit and sets SSPxIF after $\overline{ACK}$ if the R/$\overline{W}$ bit is set.
11. Client software clears SSPxIF.
12. Client loads value to transmit to the host into SSPxBUF, setting the BF bit.

Important: SSPxBUF cannot be loaded until after the $\overline{ACK}$.

13. Client software sets the CKP bit, releasing the clock.
14. Host clocks out the data from the client and sends an $\overline{ACK}$ value on the ninth SCL pulse.
15. Client hardware copies the $\overline{ACK}$ value into the ACKSTAT bit.
16. Steps 10-15 are repeated for each byte transmitted to the host from the client.
17. If the host sends a not $\overline{ACK}$, the client releases the bus allowing the host to send a Stop and end the communication.

Important: Host must send a not $\overline{ACK}$ on the last byte to ensure that the client releases the SCL line to receive a Stop.

Figure 25-23. I²C Client, 7-Bit Address, Transmission (AHEN = 1)

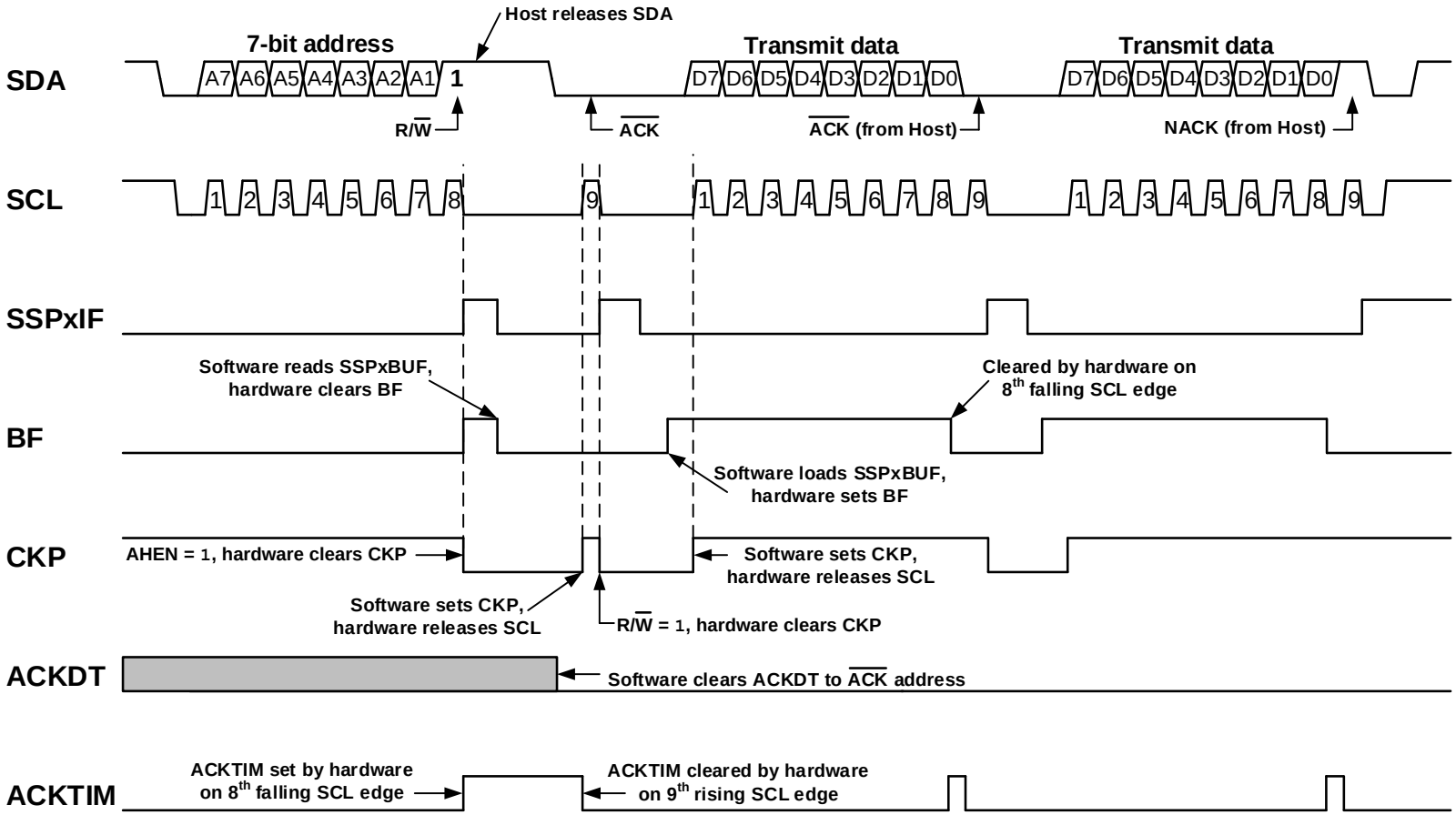

25.2.4 I²C Host Mode

Host mode is enabled by configuring the appropriate SSPM bits and setting the SSPEN bit. In Host mode, the SDA and SCL pins must be configured as inputs. The MSSP peripheral hardware will override the output driver TRIS controls when necessary to drive the pins low.

Host mode of operation is supported by interrupt generation on the detection of the Start and Stop conditions. The Stop (P) and Start (S) bits are cleared from a Reset or when the MSSP module is disabled. Control of the I²C bus may be taken when the P bit is set, or the bus is Idle.

In Firmware Controlled Host mode, user code conducts all I²C bus operations based on Start and Stop condition detection. Start and Stop condition detection is the only active circuitry in this mode. All other communication is done by the user software directly manipulating the SDA and SCL lines.

The following events will cause the MSSP Interrupt Flag (SSPxIF) bit to be set (MSSP interrupt, if enabled):

- Start condition detected
- Stop condition detected
- Data transfer byte transmitted/received
- Acknowledge transmitted/received
- Repeated Start generated

Important:

1. The MSSP module, when configured in I²C Host mode, does not allow queuing of events. For instance, the user is not allowed to initiate a Start condition and immediately write the SSPxBUF register to initiate transmission before the Start condition is complete. In this case, SSPxBUF will not be written to and the Write Collision Detect (WCOL) bit will be set, indicating that a write to SSPxBUF did not occur.
2. Host mode suspends Start/Stop detection when sending the Start/Stop condition by means of the SEN/PEN control bits. The SSPxIF bit is set at the end of the Start/Stop generation when hardware clears the control bit.

25.2.4.1 I²C Host Mode Operation

The host device generates all of the serial clock pulses and the Start and Stop conditions. A transfer is ended with a Stop condition or with a Repeated Start condition. Since the Repeated Start condition is also the beginning of the next serial transfer, the I²C bus will not be released.

In Host Transmitter mode, serial data is output through SDA, while SCL outputs the serial clock. The first byte transmitted contains the client address of the receiving device (seven bits) and the R/$\overline{W}$ bit. In this case, the R/$\overline{W}$ bit will be logic '0'. Serial data is transmitted eight bits at a time. After each byte is transmitted, an Acknowledge bit is received. Start and Stop conditions are output to indicate the beginning and the end of a serial transfer.

In Host Receive mode, the first byte transmitted contains the client address of the transmitting device (seven bits) and the R/$\overline{W}$ bit. In this case, the R/$\overline{W}$ bit will be logic '1'. Thus, the first byte transmitted is a 7-bit client address followed by a '1' to indicate the receive bit. Serial data is received via SDA, while SCL outputs the serial clock. Serial data is received eight bits at a time. After each byte is received, an Acknowledge sequence is transmitted. Start and Stop conditions indicate the beginning and end of transmission.

A Baud Rate Generator is used to set the clock frequency output on SCL. See 25.3. Baud Rate Generator for more details.

25.2.4.1.1 Clock Arbitration

Clock arbitration occurs when the host, during any receive, transmit or Repeated Start/Stop condition, releases the SCL pin (SCL allowed to float high). When the SCL pin is allowed to float high, the Baud Rate Generator (BRG) is suspended from counting until the SCL pin is actually sampled high. When the SCL pin is sampled high, the Baud Rate Generator is reloaded with the contents of SSPxADD and begins counting. This ensures that the SCL high time will always be at least one BRG rollover count in the event that the clock is held low by an external device as shown in Figure 25-24.

Figure 25-24. Baud Rate Generator Timing with Clock Arbitration

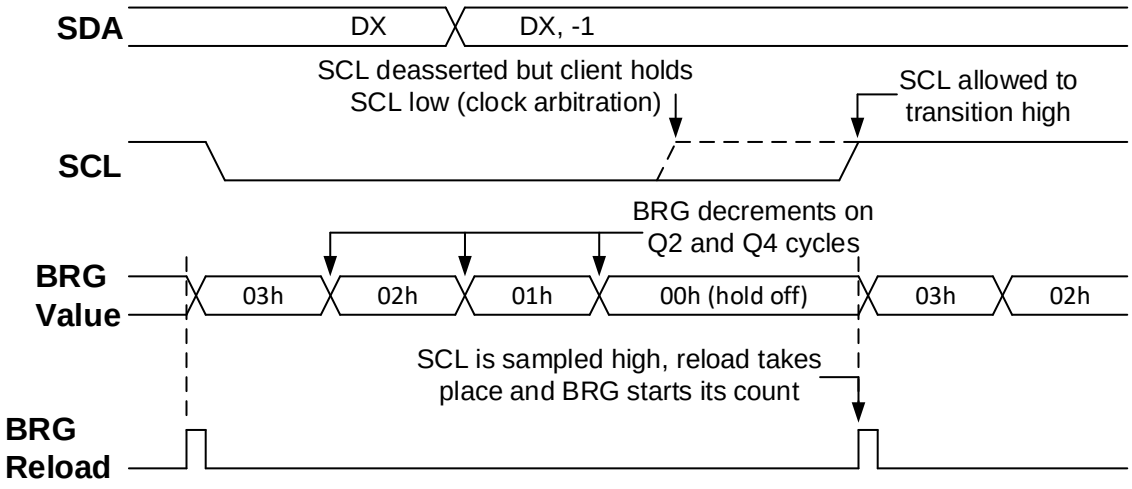

25.2.4.1.2 WCOL Status Flag

If the user writes the SSPxBUF when a Start, Restart, Stop, Receive or Transmit sequence is in progress, the Write Collision Detect (WCOL) bit is set and the contents of the buffer are unchanged (the write does not occur). Any time the WCOL bit is set it indicates that an action on SSPxBUF was attempted while the module was not Idle.

Important: Because queuing of events is not allowed, writing to the lower five bits of SSPxCON2 is disabled until the Start condition is complete.

25.2.4.1.3 I²C Host Mode Start Condition Timing

To initiate a Start condition (see Figure 25-25), the user sets the Start Condition Enable (SEN) bit. If the SDA and SCL pins are sampled high, the Baud Rate Generator is reloaded with the contents of SSPxADD and starts its count. If SCL and SDA are both sampled high when the Baud Rate Generator times out (T_{BRG}), the SDA pin is driven low. The action of the SDA being driven low while SCL is high is the Start condition and causes the Start (S) bit to be set. Following this, the Baud Rate Generator is reloaded with the contents of SSPxADD and resumes its count. When the Baud Rate Generator times out (T_{BRG}), the SEN bit will be automatically cleared by hardware; the Baud Rate Generator is suspended, leaving the SDA line held low and the Start condition is complete.

Important:

1. If at the beginning of the Start condition, the SDA and SCL pins are already sampled low, or if during the Start condition, the SCL line is sampled low before the SDA line is driven low, a bus collision occurs, the Bus Collision Interrupt Flag (BCLxIF) is set, the Start condition is aborted and the I²C module is reset into its Idle state.
2. The Philips I²C Specification states that a bus collision cannot occur on a Start.

Figure 25-25. First Start Bit Timing

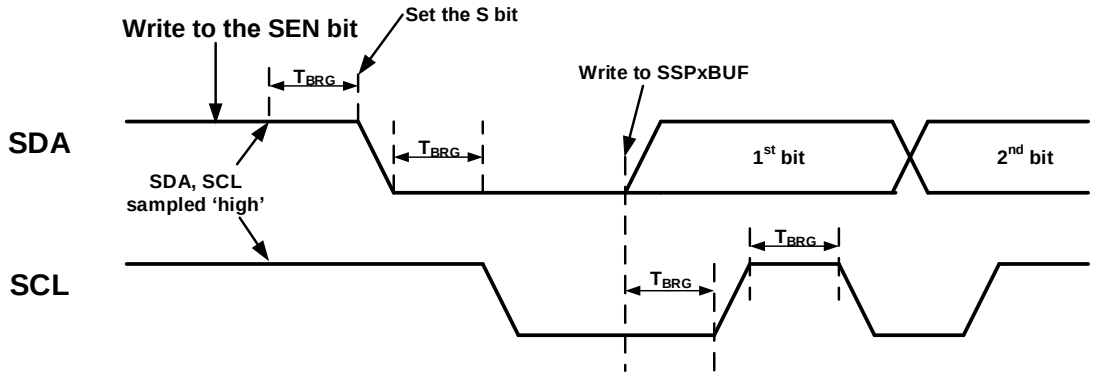

25.2.4.1.4 I²C Host Mode Repeated Start Condition Timing

A Repeated Start condition (see Figure 25-26) occurs when the Repeated Start Condition Enable (RSEN) bit is programmed high and the host state machine is Idle. When the RSEN bit is set, the SCL pin is asserted low. When the SCL pin is sampled low, the Baud Rate Generator is loaded and begins counting. The SDA pin is released (brought high) for one Baud Rate Generator count (T_{BRG}). When the Baud Rate Generator times out, if SDA is sampled high, the SCL pin will be deasserted (brought high). When SCL is sampled high, the Baud Rate Generator is reloaded and begins counting. SDA and SCL must remain high for one T_{BRG}. Module hardware then pulls the SDA line low (while SCL remains high) for one T_{BRG}, and then pulls the SCL line low. Following this, the RSEN bit will be automatically cleared and the Baud Rate Generator will not be reloaded, leaving the SDA pin held low. As soon as a Start condition is detected on the SDA and SCL pins, the S bit will be set. The SSPxIF bit will not be set until the Baud Rate Generator has timed out.

Important:

1. If RSEN is programmed while any other event is in progress, it will not take effect.
2. A bus collision during the Repeated Start condition occurs if:
   - SDA is sampled low when SCL goes from low-to-high.
   - SCL goes low before SDA is asserted low. This may indicate that another host is attempting to transmit a data '1'.

Figure 25-26. Repeated Start Condition Waveform

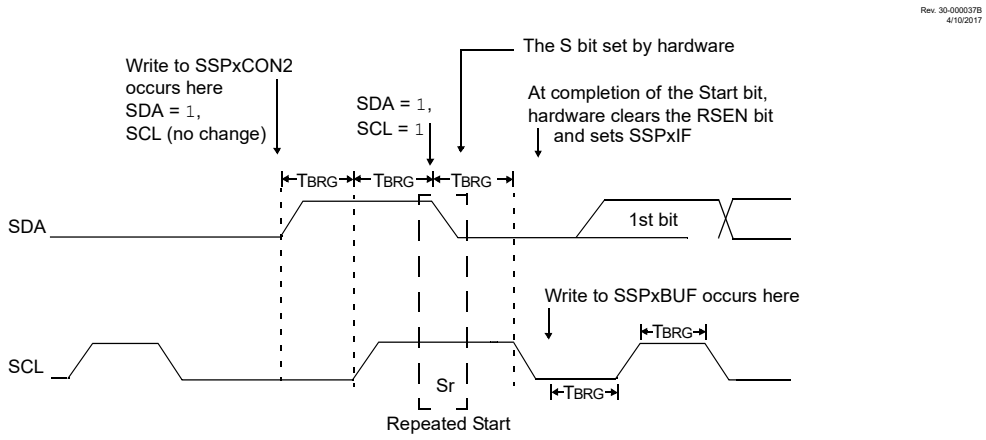

25.2.4.1.5 Acknowledge Sequence Timing

An Acknowledge sequence (see Figure 25-27) is enabled by setting the Acknowledge Sequence Enable (ACKEN) bit. When this bit is set, the SCL pin is pulled low and the contents of the Acknowledge Data (ACKDT) bit are presented on the SDA pin. If the user wishes to generate an Acknowledge, then the ACKDT bit must be cleared. If not, the user must set the ACKDT bit before starting an Acknowledge sequence. The Baud Rate Generator then counts for one rollover period (T_{BRG}) and the SCL pin is deasserted (pulled high). When the SCL pin is sampled high (clock arbitration), the Baud Rate Generator counts for T_{BRG}. The SCL pin is then pulled low. Following this, the ACKEN bit is automatically cleared, the Baud Rate Generator is turned off and the MSSP module then goes into Idle mode.

Figure 25-27. Acknowledge Sequence Waveform

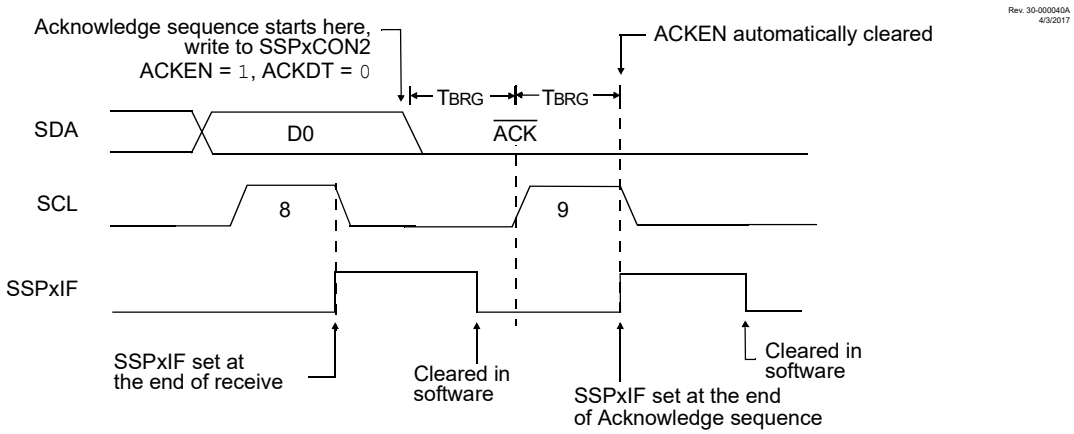

Note: TBRG = one Baud Rate Generator period.

Acknowledge Write Collision

If the user writes the SSPxBUF when an Acknowledge sequence is in progress, then the WCOL bit is set and the contents of the buffer are unchanged (the write does not occur).

25.2.4.1.6 Stop Condition Timing

A Stop condition (see Figure 25-28) is asserted on the SDA pin at the end of a receive/transmit by setting the Stop Condition Enable (PEN) bit. At the end of a receive/transmit, the SCL line is held low after the falling edge of the ninth clock. When the PEN bit is set, the host will assert the SDA line low. When the SDA line is sampled low, the Baud Rate Generator is reloaded and counts down to '0'. When the Baud Rate Generator times out, the SCL pin will be brought high and one T_{BRG} (Baud Rate Generator rollover count) later, the SDA pin will be deasserted. When the SDA pin is sampled high while SCL is high, the P bit is set. One T_{BRG} later, the PEN bit is cleared and the SSPxIF bit is set.

Figure 25-28. Stop Condition in Receive or Transmit Mode

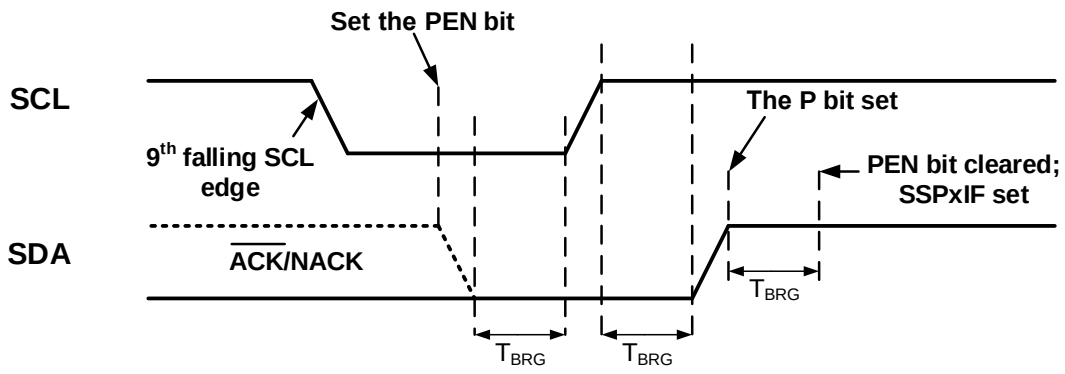

Write Collision on Stop

If the user writes the SSPxBUF when a Stop sequence is in progress, then the WCOL bit is set and the contents of the buffer are unchanged (the write does not occur).

25.2.4.1.7 Sleep Operation

While in Sleep mode, the I²C client module can receive addresses or data and when an address match or complete byte transfer occurs, wake the processor from Sleep (if the MSSP interrupt is enabled).

25.2.4.1.8 Effects of a Reset

A Reset disables the MSSP module and terminates the current transfer.

25.2.4.2 I²C Host Mode Transmission

Transmission of a data byte, a 7-bit address or the other half of a 10-bit address is accomplished by simply writing a value to the SSPxBUF register. This action will set the Buffer Full Status (BF) bit and allow the Baud Rate Generator to begin counting and start the next transmission.

Each bit of address/data will be shifted out onto the SDA pin after the falling edge of SCL is asserted. SCL is held low for one Baud Rate Generator rollover count (T_{BRG}). Data must be valid before SCL is released high. When the SCL pin is released high, it is held that way for T_{BRG}. The data on the SDA pin must remain stable for that duration and some hold time after the next falling edge of SCL. After the eighth bit is shifted out (the falling edge of the eighth clock), the BF flag is cleared and the host releases SDA. This allows the client device being addressed to respond with an $\overline{ACK}$ sequence during the ninth bit time if an address match occurred, or if data was received properly. The status of $\overline{ACK}$ is written into the Acknowledge Status (ACKSTAT) bit on the rising edge of the ninth clock. If the host receives an $\overline{ACK}$, the ACKSTAT bit is cleared. If a NACK is received, ACKSTAT is set. After the ninth clock, the SSPxIF bit is set and the host clock (Baud Rate Generator) is suspended until the next data byte is loaded into the SSPxBUF, leaving SCL low and SDA unchanged (see Figure 25-29).

After the write to the SSPxBUF, each bit of the address will be shifted out on the falling edge of SCL until all seven address bits and the R/$\overline{W}$ bit are completed. On the falling edge of the eighth clock, the host will release the SDA pin, allowing the client to respond with an $\overline{ACK}$. On the falling edge of the ninth clock, the host will sample the SDA pin to see if the address was recognized by a client. The status of the $\overline{ACK}$ bit is loaded into the ACKSTAT bit.

Following the falling edge of the ninth clock transmission of the address, the SSPxIF is set, the BF flag is cleared and the Baud Rate Generator is turned off until another write to the SSPxBUF takes place, holding SCL low and allowing SDA to float.

25.2.4.2.1 BF Status Flag

In Transmit mode, the Buffer Full Status (BF) bit is set when the CPU writes to SSPxBUF, and is cleared when all eight bits are shifted out.

25.2.4.2.2 WCOL Status Flag

If the user writes the SSPxBUF when a transmit is already in progress (i.e., SSPSR is still shifting out a data byte), the Write Collision Detect (WCOL) bit is set and the contents of the buffer are unchanged (the write does not occur).

The WCOL bit must be cleared by software before the next transmission.

25.2.4.2.3 ACKSTAT Status Flag

In Transmit mode, the Acknowledge Status (ACKSTAT) bit is cleared when the client has sent an Acknowledge ($\overline{ACK}$ = 0), and is set when the client issues a NACK. A client sends an $\overline{ACK}$ when it has recognized its address (including a General Call), or when the client has properly received its data.

25.2.4.2.4 Typical Transmit Sequence

1. The Host generates a Start condition by setting the SEN bit.
2. SSPxIF is set by hardware on completion of the Start.
3. SSPxIF is cleared by software.
4. The MSSP module will wait the required start time before any other operation takes place.
5. Software loads the SSPxBUF with the client address and the R/$\overline{W}$ bit. In Host Transmit mode, the R/$\overline{W}$ value is zero.
6. Address is shifted out the SDA pin until all eight bits are transmitted. Transmission begins as soon as SSPxBUF is written to.
7. The MSSP module shifts in the $\overline{ACK}$ value from the client device and writes its into the ACKSTAT bit.
8. The MSSP module generates an interrupt at the end of the ninth clock cycle by setting the SSPxIF bit.
9. Software loads the SSPxBUF with eight bits of data.
10. Data is shifted out the SDA pin until all eight bits are transmitted.
11. The MSSP module shifts in the $\overline{ACK}$ bit from the client device and writes its value into the ACKSTAT bit.
12. Steps 8-11 are repeated for all transmitted data bytes.
13. The user generates a Stop or Restart condition by setting the PEN or RSEN bits, respectively. An Interrupt is generated once the Stop/Restart condition is complete.

Figure 25-29. I²C Host Mode Waveform (Transmission, 7-Bit Address)

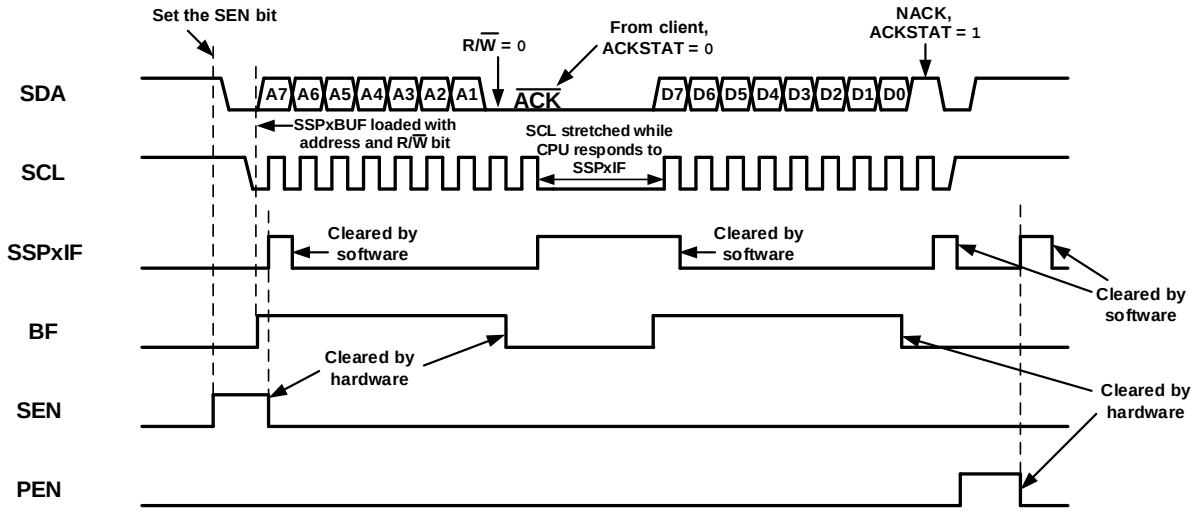

Figure 25-30. I²C Host Mode Waveform (Transmission, 10-Bit Address)

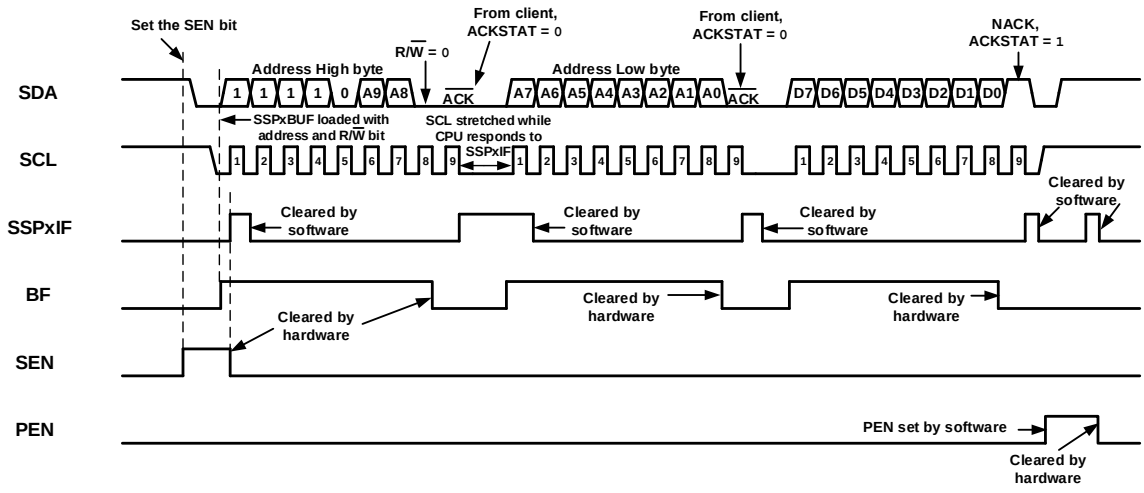

25.2.4.3 I²C Host Mode Reception

Host mode reception (see Figure 25-31) is enabled by setting the Receive Enable (RCEN) bit.

Important: The MSSP module must be in an Idle state before the RCEN bit is set or the RCEN bit will be disregarded.

The Baud Rate Generator begins counting and on each rollover, the state of the SCL pin changes (high-to-low/low-to-high) and data is shifted into the SSPxSR. After the falling edge of the eighth clock all the following events occur:

- RCEN is automatically cleared by hardware.
- The contents of the SSPxSR are loaded into the SSPxBUF.
- The BF flag bit is set.
- The SSPxIF flag bit is set.
- The Baud Rate Generator is suspended from counting.
- The SCL pin is held low.

The MSSP is now in Idle state awaiting the next command. When the buffer is read by the CPU, the BF flag bit is automatically cleared. The Host can then send an Acknowledge sequence at the end of reception by setting the Acknowledge Sequence Enable (ACKEN) bit.

25.2.4.3.1 BF Status Flag

In receive operation, the BF bit is set when an address or data byte is loaded into SSPxBUF from SSPSR. It is cleared when the SSPxBUF register is read.

25.2.4.3.2 SSPOV Status Flag

In receive operation, the SSPOV bit is set when eight bits are received into SSPxSR while the BF flag bit is already set from a previous reception.

25.2.4.3.3 WCOL Status Flag

If the user writes the SSPxBUF when a receive is already in progress (i.e., SSPxSR is still shifting in a data byte), the WCOL bit is set and the contents of the buffer are unchanged (the write does not occur).

25.2.4.3.4 Typical Receive Sequence

1. The Host generates a Start condition by setting the SEN bit.
2. SSPxIF is set by hardware on completion of the Start.
3. SSPxIF is cleared by software.
4. Software writes SSPxBUF with the client address to transmit and the R/$\overline{W}$ bit set.
5. Address is shifted out the SDA pin until all eight bits are transmitted. Transmission begins as soon as SSPxBUF is written to.
6. The MSSP module shifts in the $\overline{ACK}$ value from the client device and writes it into the ACKSTAT bit.
7. The MSSP module generates an interrupt at the end of the ninth clock cycle by setting the SSPxIF bit.
8. Software sets the RCEN bit and the host clocks in a byte from the client.
9. After the eighth falling edge of SCL, SSPxIF and BF are set.
10. Host clears SSPxIF and reads the received byte from SSPxBUF, which clears BF.
11. Host clears the ACKDT bit and initiates the $\overline{ACK}$ sequence by setting the ACKEN bit.
12. Host's $\overline{ACK}$ is clocked out to the client and SSPxIF is set.
13. User clears SSPxIF.
14. Steps 8-13 are repeated for each received byte from the client.
15. Host sends a NACK or Stop to end communication.

Figure 25-31. I²C Host Mode Waveform (Reception, 7-Bit Address)

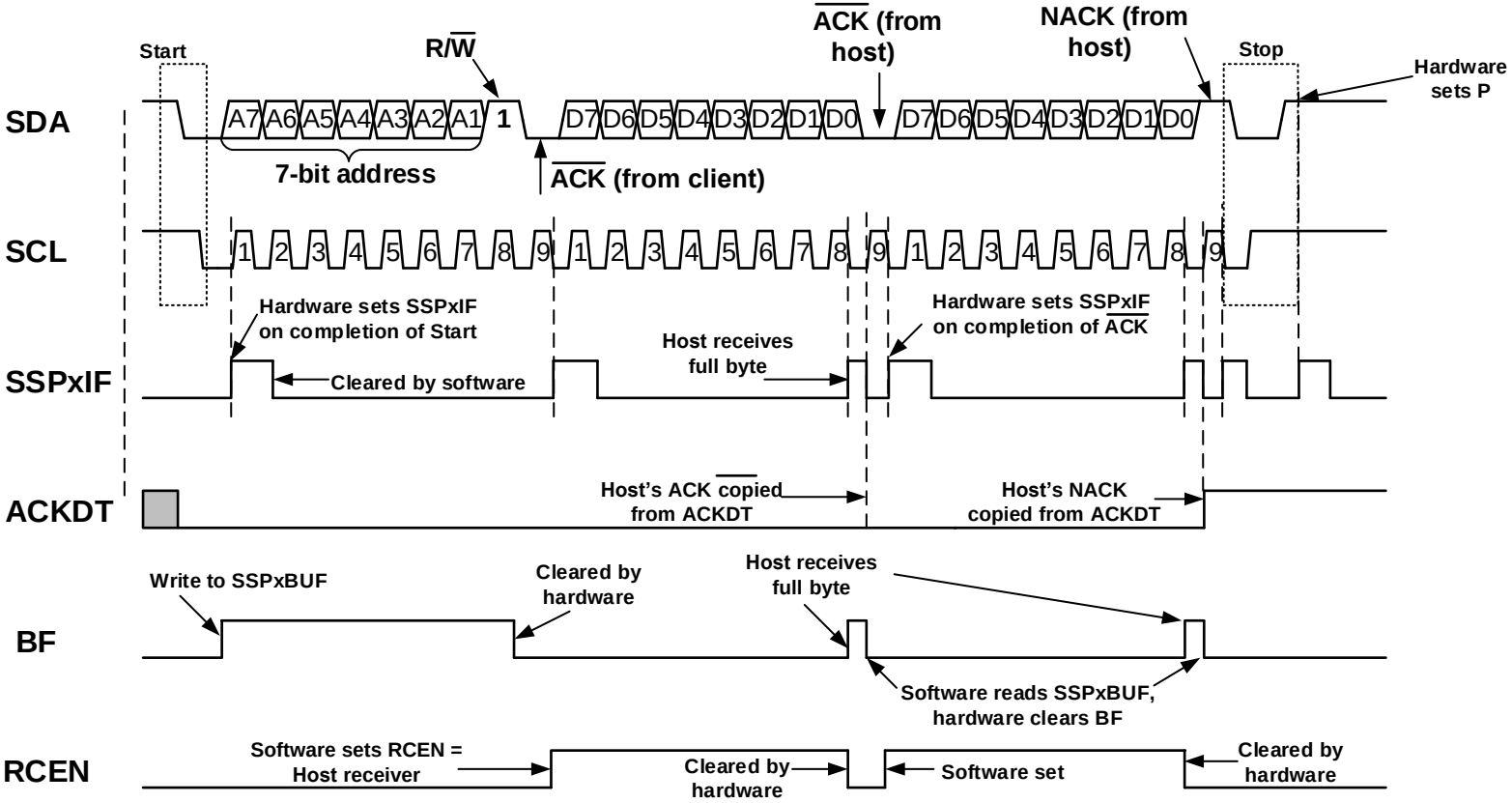

Figure 25-32. I²C Host Mode Waveform (Reception, 10-Bit Address)

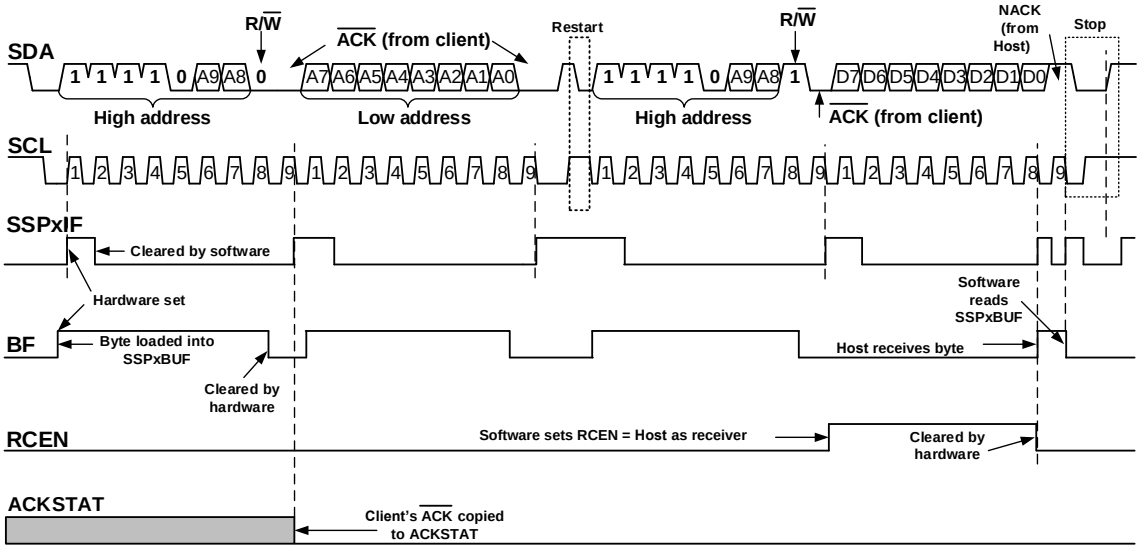

25.2.5 Multi-Host Mode

In Multi-Host mode, the interrupt generation on the detection of the Start and Stop conditions allows the determination of when the bus is free. The Stop (P) and Start (S) bits are cleared from a Reset or when the MSSP module is disabled. Control of the I²C bus may be taken when the P bit is set, or the bus is Idle, with both the S and P bits cleared. When the bus is busy, enabling the MSSP interrupt will generate an interrupt when the Stop condition occurs.

In Multi-Host operation, the SDA line must be monitored for arbitration to see if the signal level is the expected output level. This check is performed by hardware with the result placed in the BCLxIF bit.

The states where arbitration can be lost are:

- Address Transfer
- Data Transfer
- A Start Condition
- A Repeated Start Condition
- An Acknowledge Condition

25.2.5.1 Multi-Host Communication, Bus Collision and Bus Arbitration

Multi-Host mode support is achieved by bus arbitration. When the host outputs address/data bits onto the SDA pin, arbitration takes place when the host outputs a '1' on SDA, by letting SDA float high and another host asserts a '0'. When the SCL pin floats high, data may be stable. If the expected data on SDA is a '1' and the data sampled on the SDA pin is '0', then a bus collision has taken place. The host will set the Bus Collision Interrupt Flag (BCLxIF) and reset the I²C port to its Idle state (see Figure 25-33).

If a transmit was in progress when the bus collision occurred, the transmission is halted, the BF flag is cleared, the SDA and SCL lines are deasserted, and the SSPxBUF can be written to. When software services the bus collision Interrupt Service Routine, and if the I²C bus is free, software can resume communication by asserting a Start condition.

If a Start, Repeated Start, Stop or Acknowledge condition was in progress when the bus collision occurred, the condition is aborted, the SDA and SCL lines are deasserted, and the respective control bits in the SSPxCON2 register are cleared. When software services the bus collision Interrupt Service Routine, and if the I²C bus is free, software can resume communication by asserting a Start condition.

The host will continue to monitor the SDA and SCL pins. If a Stop condition occurs, the SSPxIF bit will be set.

A write to the SSPxBUF will start the transmission of data at the first data bit, regardless of where the transmitter left off when the bus collision occurred.

In Multi-Host mode, the interrupt generation on the detection of Start and Stop conditions allows the determination of when the bus is free. Control of the I^2C bus can be taken when the P bit is set, or the bus is Idle and the S and P bits are cleared.

Figure 25-33. Bus Collision Timing for Transmit and Acknowledge

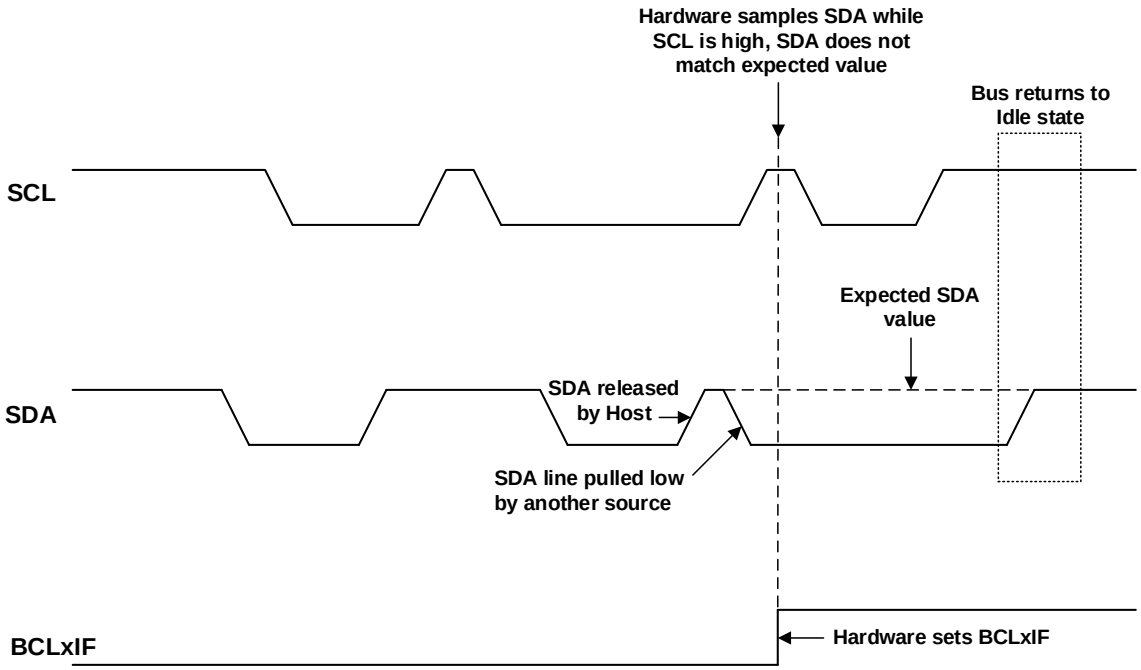

25.2.5.1.1 Bus Collision During a Start Condition

During a Start condition, a bus collision occurs if:

1. SDA or SCL are sampled low at the beginning of the Start condition (see Figure 25-34).
2. SCL is sampled low before SDA is asserted low (see Figure 25-35).

During a Start condition, both the SDA and the SCL pins are monitored.

If the SDA pin is already low, or the SCL pin is already low, then all of the following occur:

- the Start condition is aborted,
- the BCLxIF flag is set and
- the MSSP module is reset to its Idle state (see Figure 25-34).

Figure 25-34. Bus Collision During Start Condition (SDA Only)

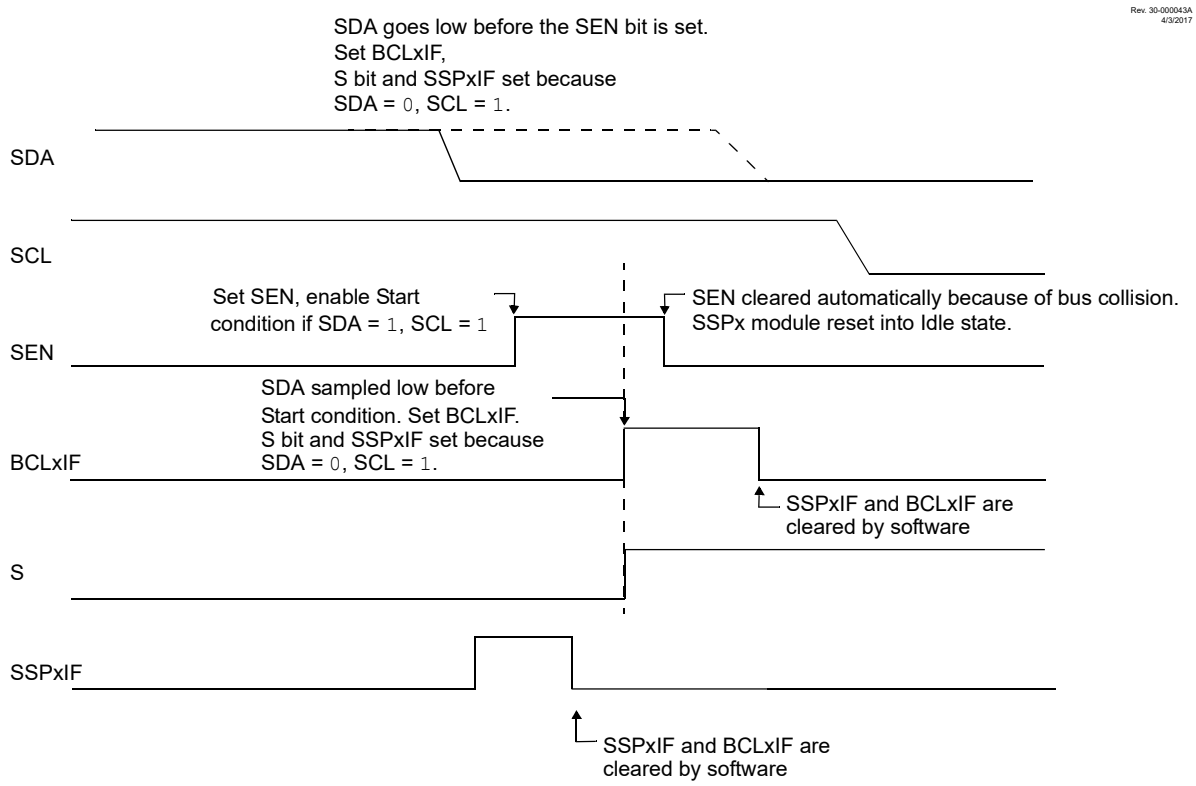

The Start condition begins with the SDA and SCL pins deasserted. When the SDA pin is sampled high, the Baud Rate Generator is loaded and counts down. If the SCL pin is sampled low while SDA is high, a bus collision occurs because it is assumed that another host is attempting to drive a data '1' during the Start condition.

Figure 25-35. Bus Collision During Start Condition (SCL = 0)

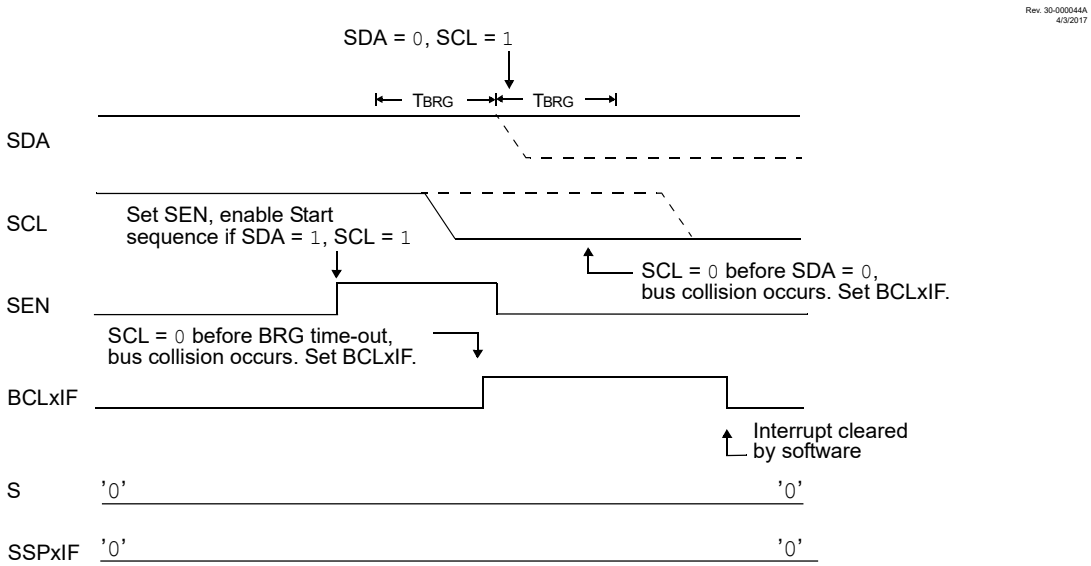

If the SDA pin is sampled low during this count, the BRG is reset and the SDA line is asserted early (see Figure 25-36). If, however, a '1' is sampled on the SDA pin, the SDA pin is asserted low at the end of the BRG count. The

Baud Rate Generator is then reloaded and counts down to zero; if the SCL pin is sampled as '0' during this time, a bus collision does not occur. At the end of the BRG count, the SCL pin is asserted low.

Figure 25-36. BRG Reset Due to SDA Arbitration During Start Condition

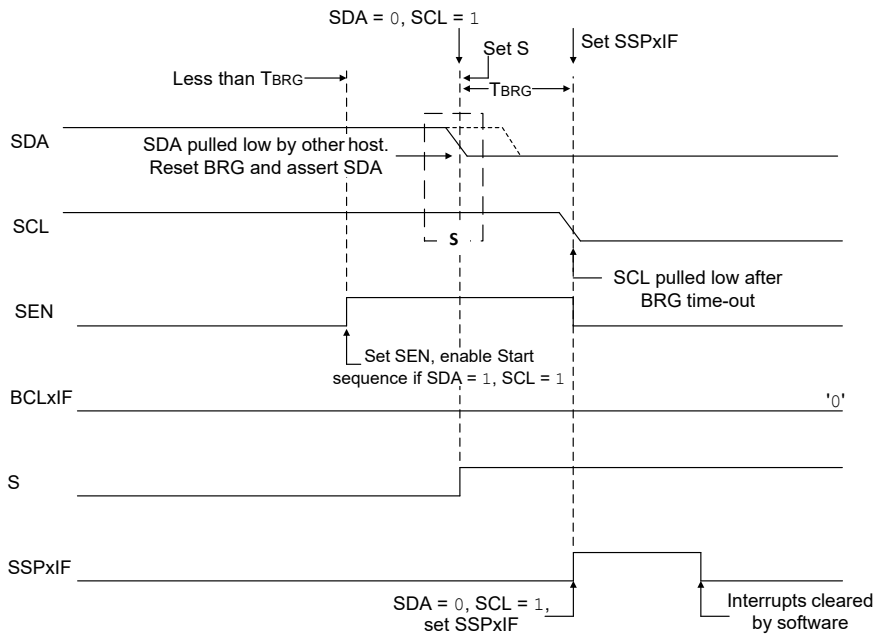

Important: The reason that a bus collision is not a factor during a Start condition is that no two bus hosts can assert a Start condition at the exact same time. Therefore, one host will always assert SDA before the other. This condition does not cause a bus collision because the two hosts must be allowed to arbitrate the first address following the Start condition. If the address is the same, arbitration must be allowed to continue into the data portion, Repeated Start or Stop conditions.

25.2.5.1.2 Bus Collision During a Repeated Start Condition

During a Repeated Start condition, a bus collision occurs if:

1. A low level is sampled on SDA when SCL goes from low level to high level (see Figure 25-37).
2. SCL goes low before SDA is asserted low, indicating that another host is attempting to transmit a data '1' (see Figure 25-38).

When the user releases SDA and the pin is allowed to float high, the BRG is loaded with SSPxADD and counts down to zero. The SCL pin is then deasserted and when sampled high, the SDA pin is sampled.

If SDA is low, a bus collision has occurred (i.e., another host is attempting to transmit a data '0', see Figure 25-37). If SDA is sampled high, the BRG is reloaded and begins counting. If SDA goes from high-to-low before the BRG times out, no bus collision occurs because no two hosts can assert SDA at exactly the same time.

Figure 25-37. Bus Collision During a Repeated Start Condition (Case 1)

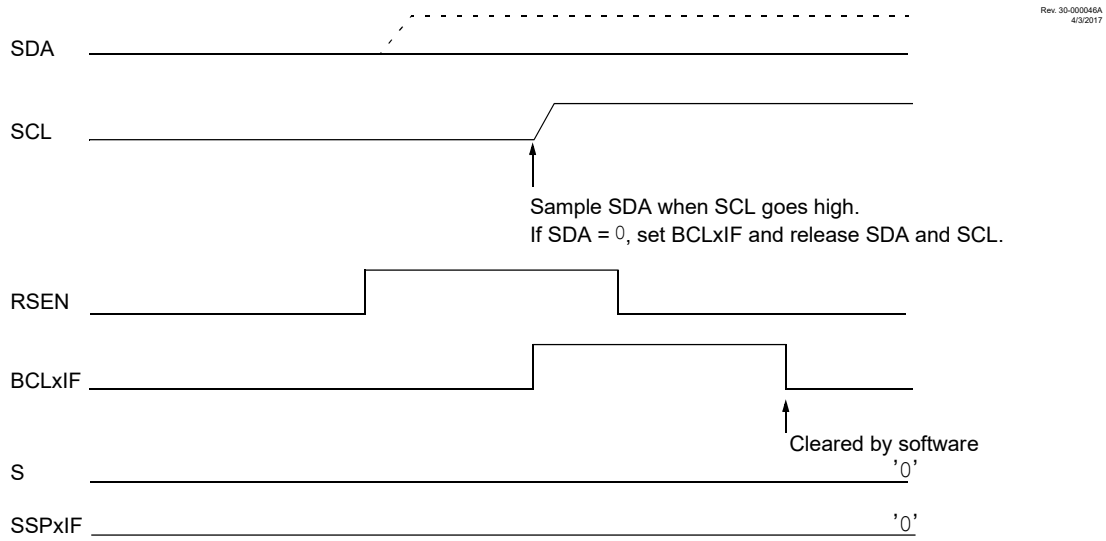

If SCL goes from high-to-low before the BRG times out and SDA has not already been asserted, a bus collision occurs. In this case, another host is attempting to transmit a data '1' during the Repeated Start condition (see Figure 25-38).

If, at the end of the BRG time-out, both SCL and SDA are still high, the SDA pin is driven low and the BRG is reloaded and begins counting. At the end of the count, regardless of the status of the SCL pin, the SCL pin is driven low and the Repeated Start condition is complete.

Figure 25-38. Bus Collision During Repeated Start Condition (Case 2)

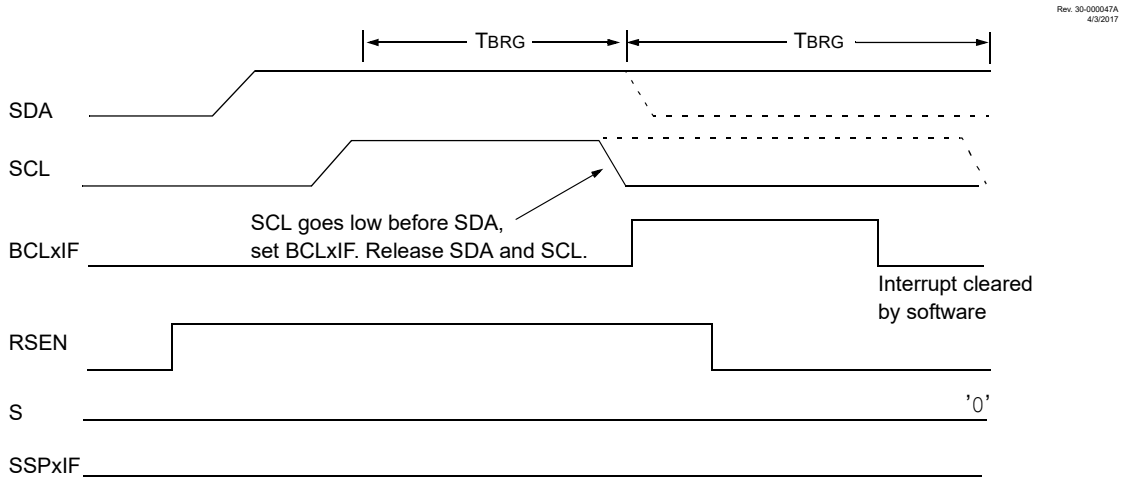

25.2.5.1.3 Bus Collision During a Stop Condition

Bus collision occurs during a Stop condition if:

1. After the SDA pin has been deasserted and allowed to float high, SDA is sampled low after the BRG has timed out (see Figure 25-39).
2. After the SCL pin is deasserted, SCL is sampled low before SDA goes high (see Figure 25-40).

The Stop condition begins with SDA asserted low. When SDA is sampled low, the SCL pin is allowed to float. When the pin is sampled high (clock arbitration), the Baud Rate Generator is loaded with SSPxADD and counts down to zero. After the BRG times out, SDA is sampled. If SDA is sampled low, a bus collision has occurred. This is due to another host attempting to drive a data '0' (see Figure 25-39). If the SCL pin is sampled low before SDA is allowed to float high, a bus collision occurs. This is another case of another host attempting to drive a data '0' (Figure 25-40).

Figure 25-39. Bus Collision During a Stop Condition (Case 1)

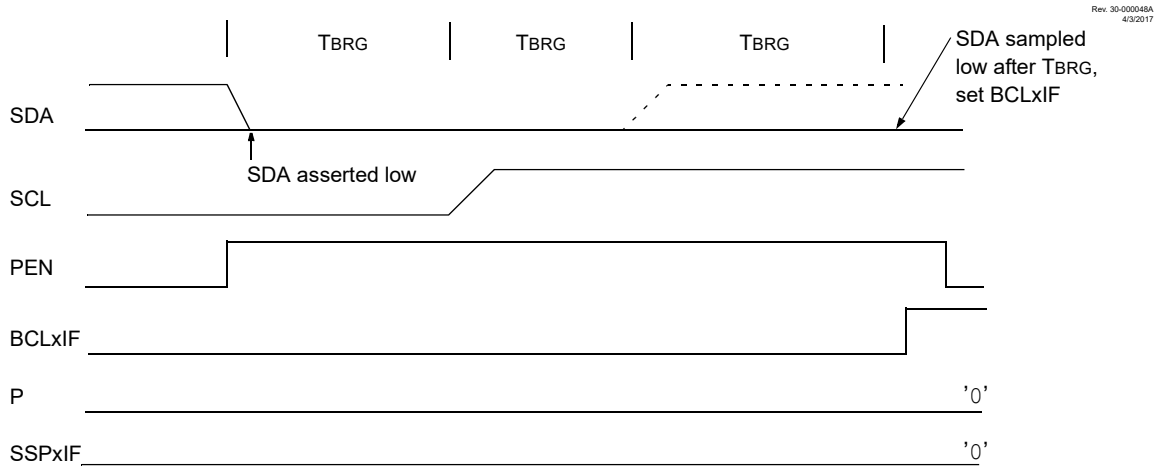

Figure 25-40. Bus Collision During a Stop Condition (Case 2)

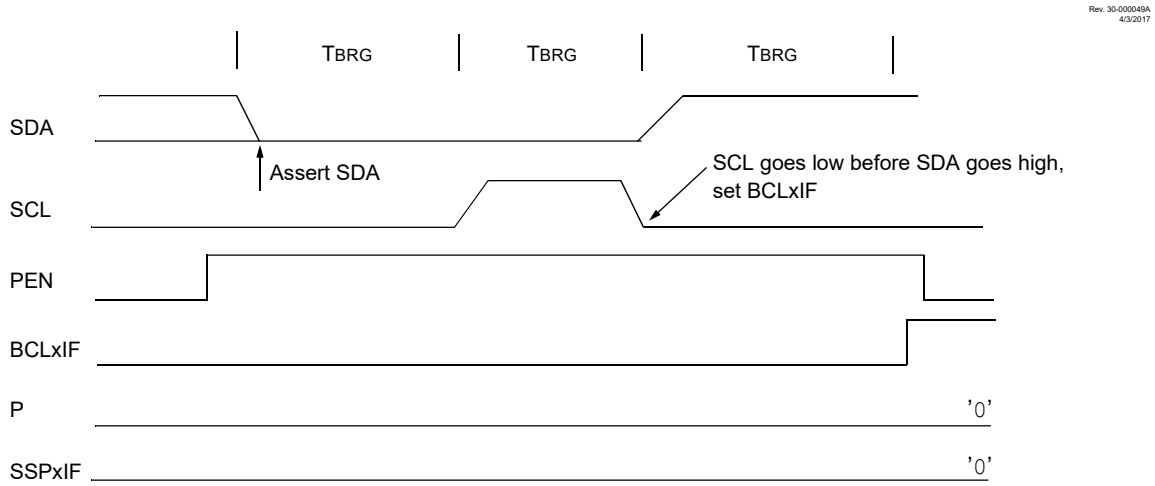

25.3 Baud Rate Generator

The MSSP module has a Baud Rate Generator (BRG) available for clock generation in both I^{2}C and SPI Host modes. The BRG reload value is placed in the SSPxADD register. When a write occurs to SSPxBUF, the BRG will automatically begin counting down. Example 25-1 shows how the value for SSPxADD is calculated.

Once the given operation is complete, the internal clock will automatically stop counting and the clock pin will remain in its last state.

An internal Reload signal, shown in Figure 25-41, triggers the value from SSPxADD to be loaded into the BRG counter. This occurs twice for each oscillation of the module clock line.

Table 25-2 illustrates clock rates based on instruction cycles and the BRG value loaded into SSPxADD.

Example 25-1. MSSP Baud Rate Generator Frequency Equation

$$F_{CLOCK} = \frac{F_{OSC}}{4 \times (SSPxADD + 1)}$$

Figure 25-41. Baud Rate Generator Block Diagram

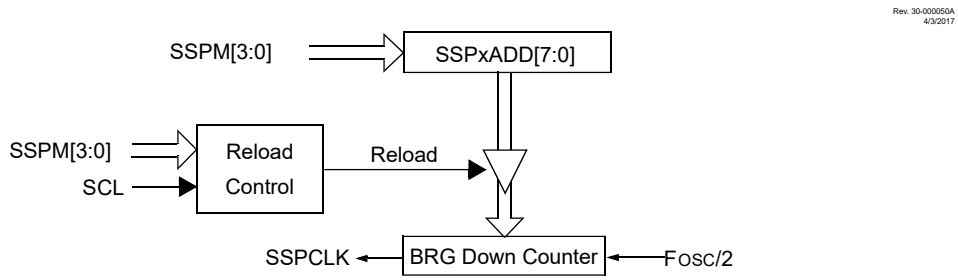

Important: Values of `0x00`, `0x01` and `0x02` are not valid for SSPxADD when used as a Baud Rate Generator for I²C. This is an implementation limitation.

Table 25-2. MSSP Clock Rate w/BRG

F_{OSC}	F_{CY}	BRG Value	F_{CLOCK} (2 Rollovers of BRG)
32 MHz	8 MHz	13h	400 kHz
32 MHz	8 MHz	19h	308 kHz
32 MHz	8 MHz	4Fh	100 kHz
16 MHz	4 MHz	09h	400 kHz
16 MHz	4 MHz	0Ch	308 kHz
16 MHz	4 MHz	27h	100 kHz
4 MHz	1 MHz	09h	100 kHz

Note: Refer to the I/O port electrical specifications in the **"Electrical Specifications"** chapter, Internal Oscillator Parameters, to ensure the system is designed to support all requirements.

25.4 Register Definitions: MSSP Control

25.4.1 SSPxBUF

Name: SSPxBUF
Offset: 0x018C

MSSP Data Buffer Register

Bit	7	6	5	4	3	2	1	0
	BUF[7:0]							
Access	R/W	R/W	R/W	R/W	R/W	R/W	R/W	R/W
Reset	x	x	x	x	x	x	x	x

Bits 7:0 – BUF[7:0] MSSP Input and Output Data Buffer bits

25.4.2 SSPxADD

Name: SSPxADD
Offset: 0x018D

MSSP Baud Rate Divider and Address Register

Bit	7	6	5	4	3	2	1	0
	ADD[7:0]							
Access	R/W	R/W	R/W	R/W	R/W	R/W	R/W	R/W
Reset	0	0	0	0	0	0	0	0

Bits 7:0 – ADD[7:0]

- SPI and I^2C Host: Baud rate divider
- I^2C Client: Address bits

Value	Mode	Description
11111111 – 00000011	SPI and I^2C Host	Baud rate divider. SCK/SCL pin clock period = ((n + 1) * 4)/F_{OSC}. Values less than 3 are not valid.
xxxxx11x – xxxxx00x	I^2C 10-bit Client MS Address	Bits [7:3] and Bit 0 are not used and are don't care. Bits [2:1] are bits [9:8] of the 10-bit Client Most Significant Address.
11111111 – 00000000	I^2C 10-bit Client LS Address	Bits [7:0] of 10-bit Client Least Significant Address
1111111x – 0000000x	I^2C 7-bit Client	Bit 0 is not used and is don't care. Bits [7:1] are the 7-bit Client Address.

25.4.3 SSPxMSK

Name: SSPxMSK
Offset: 0x018E

MSSP Address Mask Register

Bit	7	6	5	4	3	2	1	0
	MSK[6:0]							MSK0
Access	R/W	R/W	R/W	R/W	R/W	R/W	R/W	R/W
Reset	1	1	1	1	1	1	1	1

Bits 7:1 – MSK[6:0] Mask bits

Value	Mode	Description
1	I^2C Client	The received address bit n is compared to SSPxADD bit n to detect I^2C address match
0	I^2C Client	The received address bit n is not used to detect I^2C address match

Bit 0 – MSK0
Mask bit for I^2C 10-bit Client mode

Value	Mode	Description
x	SPI or I^2C 7-bit	This bit is not used
1	I^2C 10-bit Client	The received address bit 0 is compared to SSPxADD bit 0 to detect I^2C address match
0	I^2C 10-bit Client	The received address bit 0 is not used to detect I^2C address match

25.4.4 SSPxSTAT

Name: SSPxSTAT
Offset: 0x018F

MSSP Status Register

Bit	7	6	5	4	3	2	1	0
	SMP	CKE	D/$\overline{A}$	P	S	R/$\overline{W}$	UA	BF
Access	R/W	R/W	R	R	R	R	R	R
Reset	0	0	0	0	0	0	0	0

Bit 7 – SMP Slew Rate Control bit

Value	Mode	Description
1	SPI Host	Input data is sampled at the end of data output time
0	SPI Host	Input data is sampled at the middle of data output time
0	SPI Client	Bit must be cleared in SPI Client mode
1	I^2C	Slew rate control is disabled for Standard Speed mode (100 kHz and 1 MHz)
0	I^2C	Slew rate control is enabled for High Speed mode (400 kHz)

Bit 6 – CKE SPI: Clock Select bit(4); I^2C: SMBus Select bit

Value	Mode	Description
1	SPI	Transmit occurs on the transition from Active to Idle clock state
0	SPI	Transmit occurs on the transition from Idle to Active clock state
1	I^2C	Enables SMBus-specific inputs
0	I^2C	Disables SMBus-specific inputs

Bit 5 – D/$\overline{A}$ Data/$\overline{Address}$ bit

Value	Mode	Description
x	SPI or I^2C Host	This bit is not used
1	I^2C Client	Indicates that the last byte received or transmitted was data
0	I^2C Client	Indicates that the last byte received or transmitted was address

Bit 4 – P Stop bit(1)

Value	Mode	Description
x	SPI	This bit is not used
1	I^2C	Stop bit was detected last
0	I^2C	Stop bit was not detected last

Bit 3 – S Start bit(1)

Value	Mode	Description
x	SPI	This bit is not used
1	I^2C	Start bit was detected last
0	I^2C	Start bit was not detected last

Bit 2 – R/$\overline{W}$ Read/$\overline{Write}$ Information bit(2,3)

Value	Mode	Description
x	SPI	This bit is not used
1	I^2C Client	Read
0	I^2C Client	Write
1	I^2C Host	Transmit is in progress
0	I^2C Host	Transmit is not in progress

Bit 1 – UA Update Address bit (10-bit I^2C Client mode only)

Value	Mode	Description
x	All other modes	This bit is not used

Value	Mode	Description
1	I^2C 10-bit Client	Indicates that the user needs to update the address in the SSPxADD register
0	I^2C 10-bit Client	Address does not need to be updated

Bit 0 – BF Buffer Full Status bit[5]

Value	Mode	Description
1	I^2C Transmit	Transmit in progress, SSPxBUF is full
0	I^2C Transmit	Transmit complete; SSPxBUF is empty
1	SPI and I^2C Receive	Receive complete, SSPxBUF is full
0	SPI and I^2C Receive	Receive not complete, SSPxBUF is empty

Notes:

1. This bit is cleared on Reset and when SSPEN is cleared.
2. In I^2C Client mode, this bit holds the R/$\overline{W}$ bit information following the last address match. This bit is only valid from the address match to the next Start bit, Stop bit or not $\overline{ACK}$ bit.
3. ORing this bit with SEN, RSEN, PEN, RCEN or ACKEN will indicate if the MSSP is in Active mode.
4. Polarity of clock state is set by the CKP bit.
5. I^2C receive status does not include $\overline{ACK}$ and Stop bits.

25.4.5 SSPxCON1

Name: SSPxCON1
Offset: 0x0190

MSSP Control Register 1

Bit	7	6	5	4	3	2	1	0
	WCOL	SSPOV	SSPEN	CKP	SSPM[3:0]			
Access	R/W/HS	R/W/HS	R/W	R/W	R/W	R/W	R/W	R/W
Reset	0	0	0	0	0	0	0	0

Bit 7 – WCOL
Write Collision Detect bit

Value	Mode	Description
x	Host or Client receive	This bit is not used
1	SPI or I^{2}C Host or Client transmit	The SSPxBUF register is written while it is still transmitting the previous word (must be cleared in software)
0	SPI or I^{2}C Host or Client transmit	No collision

Bit 6 – SSPOV
Receive Overflow Indicator bit(1)

Value	Mode	Description
x	SPI Host or I^{2}C Host transmit	This bit is not used
1	SPI Client	A byte is received while the SSPxBUF register is still holding the previous byte. Data contained in the shift register will be discarded. The user must read SSPxBUF, even if only transmitting data, to avoid setting overflow (must be cleared in software).
1	I^{2}C Receive	A byte is received while the SSPxBUF register is still holding the previous byte (must be cleared in software)
0	SPI Client or I^{2}C Receive	No overflow

Bit 5 – SSPEN
Host Synchronous Serial Port Enable bit.(2)

Value	Description
1	Enables the serial port
0	Disables serial port and configures these pins as I/O PORT pins

Bit 4 – CKP
SCK Release Control bit

Value	Mode	Description
x	I^{2}C Host	This bit is not used
1	SPI	Idle state for the clock is a high level
0	SPI	Idle state for the clock is a low level
1	I^{2}C Client	Releases clock
0	I^{2}C Client	Holds clock low (clock stretch), used to ensure data setup time

Bits 3:0 – SSPM[3:0]
Host Synchronous Serial Port Mode Select bits(4)

Value	Description
1111	I^{2}C Client mode: 10-bit address with Start and Stop bit interrupts enabled
1110	I^{2}C Client mode: 7-bit address with Start and Stop bit interrupts enabled
1101	Reserved - do not use
1100	Reserved - do not use
1011	I^{2}C Firmware Controlled Host mode (client Idle)

Value	Description
1010	SPI Host mode: Clock = F_{OSC}/(4*(SSPxADD+1)). SSPxADD must be greater than 0.[3]
1001	Reserved - do not use
1000	I^2C Host mode: Clock = F_{OSC}/(4 * (SSPxADD + 1))
0111	I^2C Client mode: 10-bit address
0110	I^2C Client mode: 7-bit address
0101	SPI Client mode: Clock = SCKx pin. $\overline{SSx}$ pin control is disabled
0100	SPI Client mode: Clock = SCKx pin. $\overline{SSx}$ pin control is enabled
0011	SPI Host mode: Clock = TMR2 output/2
0010	SPI Host mode: Clock = F_{OSC}/64
0001	SPI Host mode: Clock = F_{OSC}/16
0000	SPI Host mode: Clock = F_{OSC}/4

Notes:

1. In Host mode, the overflow bit is not set since each new reception (and transmission) is initiated by writing to the SSPxBUF register.
2. When enabled, these pins must be properly configured as inputs or outputs.
3. SSPxADD = 0 is not supported.
4. Bit combinations not specifically listed here are either reserved or implemented in I^2C mode only.

25.4.6 SSPxCON2

Name: SSPxCON2
Offset: 0x0191

MSSP Control Register 2

Control Register for I^{2}C Operation Only

Bit	7	6	5	4	3	2	1	0
	GCEN	ACKSTAT	ACKDT	ACKEN	RCEN	PEN	RSEN	SEN
Access	R/W	R/W/HC	R/W	R/W	R/W	R/W	R/W	R/W
Reset	0	0	0	0	0	0	0	0

Bit 7 – GCEN
General Call Enable bit (Client mode only)

Value	Mode	Description
x	Host mode	Don't care
1	Client mode	General Call is enabled
0	Client mode	General Call is not enabled

Bit 6 – ACKSTAT Acknowledge Status bit (Host Transmit mode only)

Value	Description
1	Acknowledge was not received from client
0	Acknowledge was received from client

Bit 5 – ACKDT
Acknowledge Data bit (Host Receive mode only)(1)

Value	Description
1	Not Acknowledge
0	Acknowledge

Bit 4 – ACKEN
Acknowledge Sequence Enable bit(2)

Value	Description
1	Initiates Acknowledge sequence on SDAx and SCLx pins and transmits ACKDT data bit; automatically cleared by hardware
0	Acknowledge sequence is Idle

Bit 3 – RCEN
Receive Enable bit (Host Receive mode only)(2)

Value	Description
1	Enables Receive mode for I^{2}C
0	Receive is Idle

Bit 2 – PEN
Stop Condition Enable bit (Host mode only)(2)

Value	Description
1	Initiates Stop condition on SDAx and SCLx pins; automatically cleared by hardware
0	Stop condition is Idle

Bit 1 – RSEN
Repeated Start Condition Enable bit (Host mode only)(2)

Value	Description
1	Initiates Repeated Start condition on SDAx and SCLx pins; automatically cleared by hardware
0	Repeated Start condition is Idle

Bit 0 – SEN

Start Condition Enable bit[2]

Value	Mode	Description
1	Host	Initiates Start condition on SDAx and SCLx pins; automatically cleared by hardware
0	Host	Start condition is Idle
1	Client	Clock stretching is enabled
0	Client	Clock stretching is disabled

Notes:

1. The value that will be transmitted when the user initiates an Acknowledge sequence at the end of a receive.
2. If the I^2C module is active, these bits may not be set (no spooling) and the SSPxBUF may not be written (or writes to the SSPxBUF are disabled).

25.4.7 SSPxCON3

Name: SSPxCON3
Offset: 0x0192

MSSP Control Register 3

Bit	7	6	5	4	3	2	1	0
	ACKTIM	PCIE	SCIE	BOEN	SDAHT	SBCDE	AHEN	DHEN
Access	R/HS/HC	R/W	R/W	R/W	R/W	R/W	R/W	R/W
Reset	0	0	0	0	0	0	0	0

Bit 7 – ACKTIM
Acknowledge Time Status bit

Value	Mode	Description
x	SPI or I²C Host	This bit is not used
1	I²C Client and AHEN = 1 or DHEN = 1	Eighth falling edge of SCL has occurred and the $\overline{\text{ACK}}$/NACK state is Active
0	I²C Client	$\overline{\text{ACK}}$/NACK state is not Active. Transitions low on ninth rising edge of SCL.

Bit 6 – PCIE
Stop Condition Interrupt Enable bit

Value	Mode	Description
x	SPI or SSPM = 1111 or 1110	This bit is not used
1	SSPM ≠ 1111 and SSPM ≠ 1110	Enable interrupt on detection of Stop condition
0	SSPM ≠ 1111 and SSPM ≠ 1110	Stop detection interrupts are disabled

Bit 5 – SCIE Start Condition Interrupt Enable bit

Value	Mode	Description
x	SPI or SSPM = 1111 or 1110	This bit is not used
1	SSPM ≠ 1111 and SSPM ≠ 1110	Enable interrupt on detection of Start condition
0	SSPM ≠ 1111 and SSPM ≠ 1110	Start detection interrupts are disabled

Bit 4 – BOEN
Buffer Overwrite Enable bit(1)

Value	Mode	Description
1	SPI	SSPxBUF is updated every time a new data byte is available, ignoring the BF bit
0	SPI	If a new byte is receive with BF set then SSPOV is set and SSPxBUF is not updated
1	I²C	SSPxBUF is updated every time a new data byte is available, ignoring the SSPOV effect on updating the buffer
0	I²C	SSPxBUF is only updated when SSPOV is clear

Bit 3 – SDAHT SDA Hold Time Selection bit

Value	Mode	Description
x	SPI	Not used in SPI mode
1	I²C	Minimum of 300 ns hold time on SDA after the falling edge of SCL
0	I²C	Minimum of 100 ns hold time on SDA after the falling edge of SCL

Bit 2 – SBCDE Client Mode Bus Collision Detect Enable bit
Unused in Host mode.

Value	Mode	Description
x	SPI or I²C Host	This bit is not used
1	I²C Client	Bus Collision detection is enabled
0	I²C Client	Bus Collision detection is not enabled

Bit 1 – AHEN Address Hold Enable bit

Value	Mode	Description
x	SPI or I^2C Host	This bit is not used
1	I^2C Client	Address hold is enabled. As a result, CKP is cleared after the eighth falling SCL edge of an address byte reception. Software must set the CKP bit to resume operation.
0	I^2C Client	Address hold is not enabled

Bit 0 – DHEN Data Hold Enable bit

Value	Mode	Description
x	SPI or I^2C Host	This bit is not used
1	I^2C Client	Data hold is enabled. As a result, CKP is cleared after the eighth falling SCL edge of a data byte reception. Software must set the CKP bit to resume operation.
0	I^2C Client	Data hold is not enabled

Note:

1. For daisy-chained SPI operation; allows the user to ignore all except the last received byte. SSPOV is still set when a new byte is received and BF = 1, but hardware continues to write the most recent byte to SSPxBUF.

25.5 Register Summary - MSSP Control

Offset	Name	Bit Pos.	7	6	5	4	3	2	1	0
0x00 ... 0x018B	Reserved									
0x018C	SSP1BUF	7:0	BUF[7:0]							
0x018D	SSP1ADD	7:0	ADD[7:0]							
0x018E	SSP1MSK	7:0	MSK[6:0]							MSK0
0x018F	SSP1STAT	7:0	SMP	CKE	D/$\overline{A}$	P	S	R/$\overline{W}$	UA	BF
0x0190	SSP1CON1	7:0	WCOL	SSPOV	SSPEN	CKP	SSPM[3:0]			
0x0191	SSP1CON2	7:0	GCEN	ACKSTAT	ACKDT	ACKEN	RCEN	PEN	RSEN	SEN
0x0192	SSP1CON3	7:0	ACKTIM	PCIE	SCIE	BOEN	SDAHT	SBCDE	AHEN	DHEN

26. FVR - Fixed Voltage Reference

The Fixed Voltage Reference (FVR) is a stable voltage reference, independent of V_{DD}, with 1.024V, 2.048V or 4.096V selectable output levels. The output of the FVR can be configured to supply a reference voltage to the ADC module as a positive reference and input channel.

The FVR can be enabled by setting the FVREN bit to '1'.

Note: Fixed Voltage Reference output cannot exceed V_{DD}.

26.1 Independent Gain Amplifiers

The output of the FVR, which is connected to the ADC, is routed through an independent programmable gain amplifier. This amplifier can be programmed for a gain of 1x, 2x or 4x, to produce the three possible voltage levels.

The ADFVR bits are used to enable and configure the gain amplifier settings for the reference supplied to the ADC module.

Refer to the figure below for the block diagram of the FVR module.

Figure 26-1. FVR Block Diagram

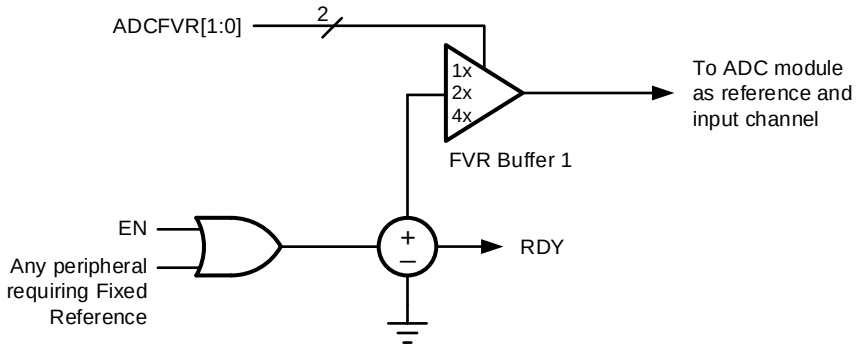

26.2 FVR Stabilization Period

When the FVR module is enabled, it requires time for the reference and amplifier circuits to stabilize. Once the circuits stabilize and are ready for use, the FVRRDY bit will be set.

26.3 Register Definitions: FVR

Long bit name prefixes for the FVR peripherals are shown in the following table. Refer to "**Long Bit Names**" in the "**Register and Bit Naming Conventions**" section for more information.

Table 26-1. FVR Long Bit Name Prefixes

Peripheral	Bit Name Prefix
FVR	FVR

26.3.1 FVRCON

Name: FVRCON
Offset: 0x090C

Fixed Voltage Reference Control Register

Bit	7	6	5	4	3	2	1	0
	FVREN	FVRRDY					ADFVR[1:0]	
Access	R/W	R					R/W	R/W
Reset	0	0					0	0

Bit 7 – FVREN Fixed Voltage Reference Enable bit

Value	Description
1	Fixed Voltage Reference is enabled
0	Fixed Voltage Reference is disabled

Bit 6 – FVRRDY Fixed Voltage Reference Ready Status bit (2)

Value	Description
1	Fixed Voltage Reference output is ready for use
0	Fixed Voltage Reference output is not ready or not enabled

Bits 1:0 – ADFVR[1:0] ADC FVR Buffer Gain Selection bit

Value	Description
11	ADC FVR Buffer Gain is 4x, (4.096V)(1)
10	ADC FVR Buffer Gain is 2x, (2.048V)(1)
01	ADC FVR Buffer Gain is 1x, (1.024V)
00	ADC FVR Buffer is off

Notes:

1. Fixed Voltage Reference output cannot exceed V_{DD}.
2. FVRRDY is always '1'.

26.4 Register Summary - FVR

Offset	Name	Bit Pos.	7	6	5	4	3	2	1	0
0x00 ... 0x090B	Reserved									
0x090C	FVRCON	7:0	FVREN	FVRRDY					ADFVR[1:0]	

27. ADC - Analog-to-Digital Converter

The Analog-to-Digital Converter (ADC) allows the conversion of an analog input signal into a 10-bit binary representation of that signal. This device uses analog inputs, which are multiplexed into a single Sample-and-Hold circuit. The output of the Sample-and-Hold circuit is connected to the input of the converter. The converter generates a 10-bit binary result via successive approximation and stores the results in the ADC Result registers (ADRESH:ADRESL register pair).

The ADC voltage reference is software selectable to be either internally generated or externally supplied.

The ADC can generate an interrupt upon completion of a conversion. This interrupt can be used to wake up the device from Sleep.

Figure 27-1 shows the block diagram of the ADC.

Figure 27-1. ADC Block Diagram

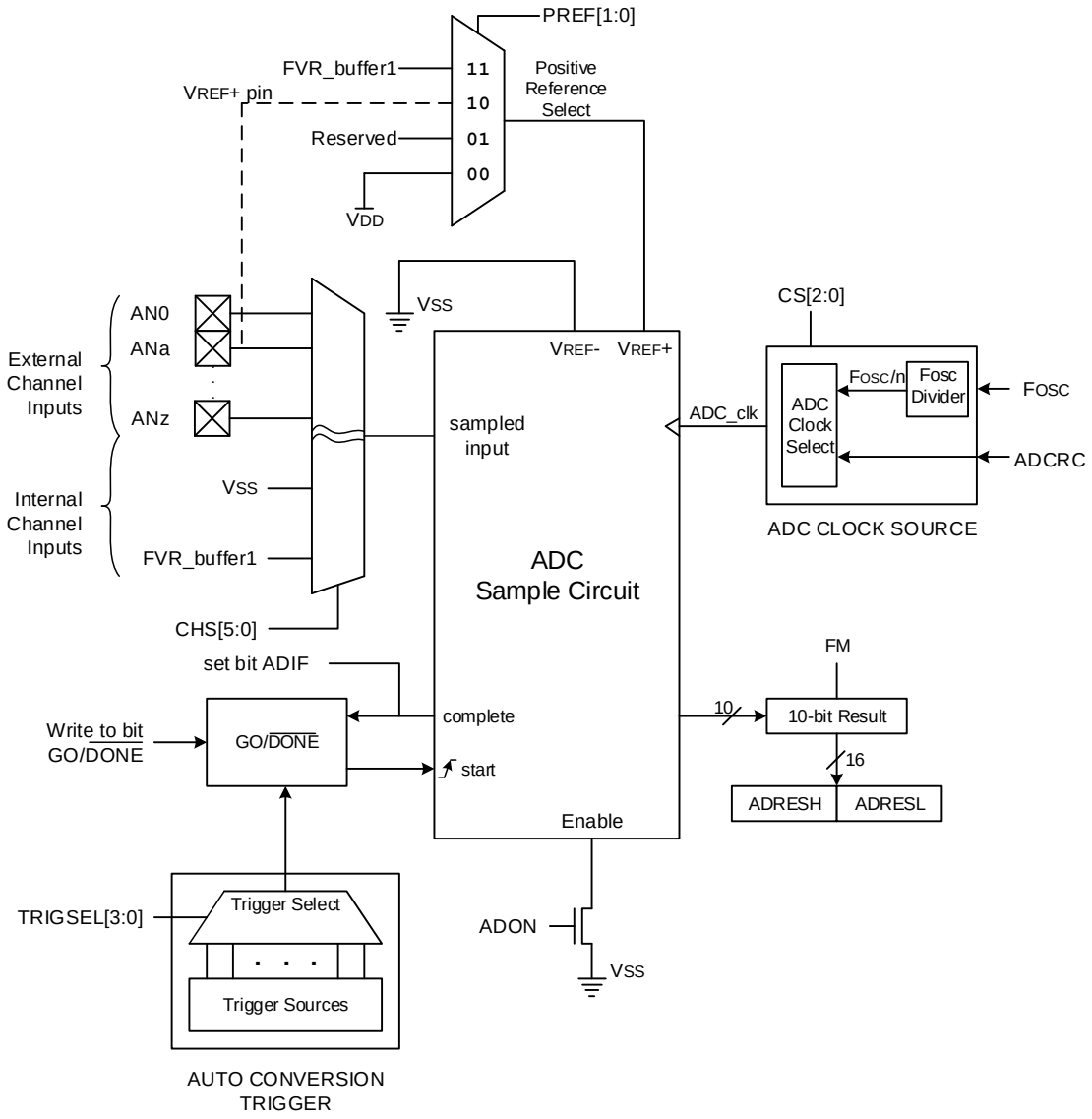

27.1 ADC Configuration

When configuring and using the ADC, the following functions must be considered:

- PORT Configuration
- Channel Selection
- ADC Voltage Reference Selection
- ADC Conversion Clock Source
- Interrupt Control
- Result Formatting

27.1.1 Port Configuration

The ADC will convert the voltage on a pin whether or not the ANSEL bit is set. When converting analog signals, the I/O pin may be configured for analog by setting the associated TRIS and ANSEL bits. Refer to the "**I/O Ports**" section for more information.

Important: Analog voltages on any pin that is defined as a digital input may cause the input buffer to conduct excess current.

27.1.2 Channel Selection

The Analog Channel Select (CHS) bits determine which channel is connected to the Sample-and-Hold circuit for conversion. When switching channels, it is recommended to add an acquisition delay before starting the next conversion. Refer to the ADC Operation section for more information.

Important: To reduce the chance of measurement error, it is recommended to discharge the Sample-and-Hold capacitor when switching between ADC channels by starting a conversion on a channel connected to V_{SS} and terminating the conversion after the acquisition time has elapsed. If the ADC does not have a dedicated V_{SS} input channel, a free input channel can be connected to V_{SS} and used in place of the dedicated input channel.

27.1.3 ADC Voltage Reference

The ADC Positive Voltage Reference Selection (PREF) bits provide control of the positive voltage reference. Refer to the ADC Control Register 1 (ADCON1) for the list of available positive voltage sources.

27.1.4 Conversion Clock

The conversion clock source is selected via the ADC Conversion Clock Select (CS) bits. The available clock sources include several derivatives of the system clock (F_{OSC}), as well as a dedicated internal fixed-frequency clock referred to as the ADCRC.

The time to complete one bit conversion is defined as the T_{AD}. Refer to Figure 27-2 for complete timing details of the ADC conversion.

For a correct conversion, the appropriate T_{AD} specification must be met. Refer to the *ADC Timing Specifications* table in the "**Electrical Specifications**" section for more details. Table 27-1 gives examples of appropriate ADC clock selections.

Important:

- With the exception of the ADCRC clock source, any changes in the system clock frequency will change the ADC clock frequency, which may adversely affect the ADC result.
- The internal control logic of the ADC operates off of the clock selected by the CS bits. When the CS bits select the ADCRC, there may be unexpected delays in operation when setting the ADC control bits.

Table 27-1. ADC Clock Period (T_{AD}) for Different Device Frequencies (F_{OSC})

ADC Clock Source	CS[2:0]	ADC Clock Period (T_{AD}) for Different Device Frequencies (F_{OSC})					
		32 MHz	20 MHz	16 MHz	8 MHz	4 MHz	1 MHz
$F_{OSC}/2$	`b000	62.5 ns(2)	100 ns(2)	125 ns(2)	250 ns(2)	500 ns	2.0 µs
$F_{OSC}/4$	`b100	125 ns(2)	200 ns(2)	250 ns(2)	500 ns	1.0 µs	4.0 µs

.....continued

ADC Clock Source	CS[2:0]	ADC Clock Period (T_{AD}) for Different Device Frequencies (F_{OSC})					
		32 MHz	20 MHz	16 MHz	8 MHz	4 MHz	1 MHz
F_{OSC}/8	'b001	250 ns(2)	400 ns(2)	500 ns	1.0 µs	2.0 µs	8.0 µs
F_{OSC}/16	'b101	500 ns	800 ns	1.0 µs	2.0 µs	4.0 µs	16.0 µs(2)
F_{OSC}/32	'b010	1.0 µs	1.6 µs	2.0 µs	4.0 µs	8.0 µs	32.0 µs(2)
F_{OSC}/64	'b110	2.0 µs	3.2 µs	4.0 µs	8.0 µs	16.0 µs(2)	64.0 µs(2)
ADCRC	'bx11	1.0 - 6.0(1,3)					

Notes:

1. Refer to the "**Electrical Specifications**" section to see the T_{AD} parameter for the ADCRC source typical T_{AD} value.
2. These values violate the required T_{AD} time.
3. The ADC clock period (T_{AD}) and the total ADC conversion time can be minimized when the ADC clock is derived from the system clock F_{OSC}. However, the ADCRC oscillator source must be used when conversions are to be performed with the device in Sleep mode.

Figure 27-2. 10-Bit Analog-to-Digital Conversion T_{AD} Cycles

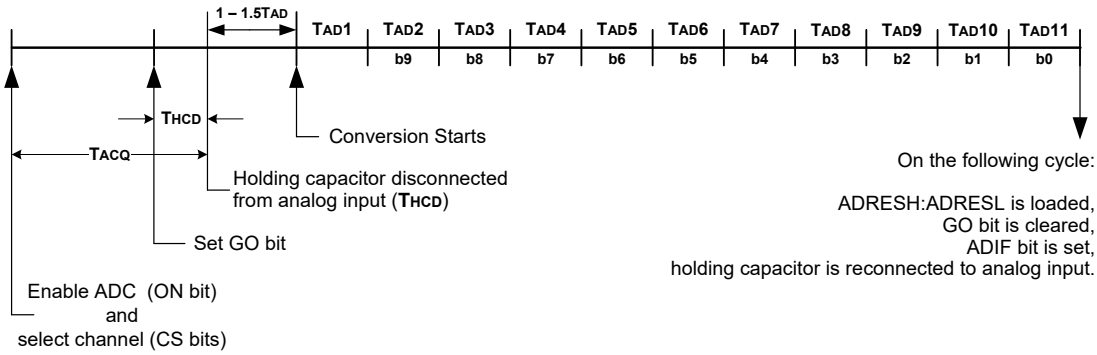

27.1.5 Interrupts

The ADC module allows for the ability to generate an interrupt upon completion of an analog-to-digital conversion. The ADC Interrupt Flag (ADIF) bit is set upon the completion of each conversion. If the ADC Interrupt Enable (ADIE) bit is set, an ADC interrupt event occurs. The ADIF bit must be cleared by software.

Important:

1. The ADIF bit is set at the completion of every conversion, regardless of whether or not the ADC Interrupt is enabled.
2. The ADC operates in Sleep only when the ADCRC oscillator is selected as the clock source.

The ADC Interrupt can be generated while the device is operating or while in Sleep. While the device is operating in Sleep mode:

- If ADIE = 1, PEIE = 1, and GIE = 0: An interrupt will wake the device from Sleep. Upon waking from Sleep, the instructions following the SLEEP instruction are executed. The Interrupt Service Routine is not executed.
- If ADIE = 1, PEIE = 1, and GIE = 1: An interrupt will wake the device from Sleep. Upon waking from Sleep, the instruction following the SLEEP instruction is always executed. Then the execution will switch to the Interrupt Service Routine.

27.1.6 ADC Result Formatting

The 10-bit ADC conversion result can be supplied in two formats: left-justified or right-justified. The ADC Result Format/Alignment Selection (FM) bit controls the output format as shown in Figure 27-3.

Figure 27-3. 10-Bit ADC Conversion Result Format

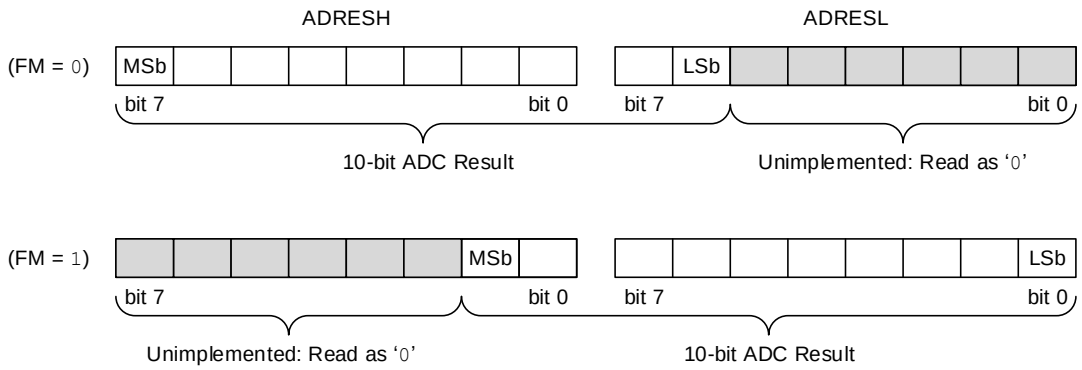

Important: Writes to the ADRES register pair are always right-justified, regardless of the selected format mode. Therefore, data read after writing to ADRES when FM = 0 will be shifted left four places.

27.2 ADC Operation

27.2.1 Starting a Conversion

To enable the ADC module, the ON bit must be set to '1'. A conversion may be started by either of the following:

- Software setting the GO bit to '1'
- An external trigger (source selected by the ADC Auto-Conversion Trigger (ADACT) register)

Important: The GO bit must not be set in the same instruction that turns on the ADC. Refer to 27.2.5. ADC Conversion Procedure for more details.

27.2.2 Completion of a Conversion

When the conversion is complete, the ADC module will:

- Clear the GO bit

- Set the ADIF bit
- Update the ADRES registers with the new conversion result

27.2.3 ADC Operation During Sleep

The ADC module can operate in Sleep. This requires the ADC clock source to be set to the ADCRC option. When the ADC oscillator source is selected, the ADC waits one additional instruction before starting the conversion. This allows the `SLEEP` instruction to be executed, which can reduce system noise during the conversion. If the ADC interrupt is enabled (ADIE = `1`), the device will wake up from Sleep when the conversion completes. If the ADC interrupt is disabled (ADIE = `0`), the device remains in Sleep and the ADC module is turned off, although the ON bit remains set.

When the ADC clock source is something other than the ADCRC, a `SLEEP` instruction causes the present conversion to be aborted and the ADC is turned off, although the ON bit remains set.

27.2.3.1 External Trigger During Sleep

If an external trigger is received when the ADC is in Sleep, the trigger will be recorded, but the conversion will not begin until the device exits Sleep.

27.2.4 Auto-Conversion Trigger

The auto-conversion trigger allows periodic ADC measurements without software intervention. When a rising edge of the selected source occurs, the GO bit is set by hardware.

The auto-conversion trigger source is selected with the Auto-Conversion Trigger Select (ACT) bits.

Important: Using the auto-conversion trigger does not ensure proper ADC timing. It is the user's responsibility to ensure that the ADC timing requirements are met.

27.2.5 ADC Conversion Procedure

This is an example procedure for using the ADC to perform an analog-to-digital conversion:

1. Configure port:
   a. Disable the pin output driver (refer to the TRISx register)
   b. Configure the pin as analog (refer to the ANSELx register)
2. Configure the ADC module:
   a. Select the ADC conversion clock
   b. Configure the voltage reference
   c. Select the ADC input channel
   d. Configure result format
   e. Turn on the ADC module
3. Configure ADC interrupt (optional):
   a. Clear the ADC interrupt flag
   b. Enable the ADC interrupt
   c. Enable the peripheral interrupt (PEIE bit)
   d. Enable the global interrupt (GIE bit)[1]
4. Wait the required acquisition time[2]
5. Start conversion by setting the GO bit
6. Wait for ADC conversion to complete by one of the following:
   – Polling the GO bit
   – Waiting for the ADC interrupt (if interrupt is enabled)
7. Read ADC Result
8. Clear the ADC interrupt flag (if interrupt is enabled)

Notes:

1. With global interrupts disabled (GIE = 0), the device will wake from Sleep but will not enter an Interrupt Service Routine.
2. Refer to 27.3. ADC Acquisition Requirements for more details.

Example 27-1. ADC Conversion (assembly)

```
; This code block configures the ADC for polling,
; VDD and VSS references,
; ADCRC oscillator, and AN0 input.
; Conversion start & polling for completion are included.

    BANKSEL TRISA
    BSF     TRISA,0      ; Set RA0 to input
    BANKSEL ANSEL
    BSF     ANSEL,0      ; Set RA0 to analog
    BANKSEL ADCON0
    CLRF    ADCON0
    CLRF    ADCON1
    CLRF    ADACT        ; Auto-conversion disabled
    BSF     ADCON0,0     ; CHS = RA0, ADC ON
    MOVLW   B'11110000'  ; FM = Right-justified, CS = ADCRC, PREF = VDD
    MOVWF   ADCON1
    CALL    SampleTime   ; Acquisition delay
    BANKSEL ADCON0
    BSF     ADCON0,GO    ; Start conversion
    BTFSC   ADCON0,GO    ; Is conversion done?
    GOTO    $-1          ; No, test again
    BANKSEL ADRESH
    MOVF    ADRESH,W     ; Read upper byte
    MOVWF   RESULTHI     ; Store in GPR space
    MOVF    ADRESL,W     ; Read lower byte
    MOVWF   RESULTLO     ; Store in GPR space
```

Example 27-2. ADC Conversion (C)

```
/*This code block configures the ADC
for polling, VDD and VSS references,
ADCRC oscillator and AN0 input.
Conversion start & polling for completion
are included.
  */
    void main() {
        //System Initialize
        initializeSystem();

        // Configure Port
        TRISAbits.TRISA0 = 1;       // Set RA0 to input
        ANSELAbits.ANSELA0 = 1;     // Set RA0 to analog

        // Configure ADC
        ADCON1bits.CS = 1;          // ADCRC Clock
        ADCON1bits.PREF = 'b11;     // VDD
        ADCON0bits.CHS = 'b000000;  // RA0
        ADCON1bits.FM = 1;          // Right justify
        ADCON0bits.ON = 1;          // Turn ADC On

    while (1) {
        ADCON0bits.GO = 1;          // Start conversion
        while (ADCON0bits.GO);      // Wait for conversion done
        resultHigh = ADRESH;        // Read result
        resultLow = ADRESL;         // Read result
```

```
        }
    }
```

27.3 ADC Acquisition Requirements

For the ADC to meet its specified accuracy, the charge holding capacitor (C_{HOLD}) must be allowed to fully charge to the input channel voltage level. The analog input model is shown in Figure 27-4. The source impedance (R_S) and the internal sampling switch (R_{SS}) impedance directly affect the time required to charge the capacitor C_{HOLD}. The sampling switch (R_{SS}) impedance varies over the device voltage (V_{DD}). The maximum recommended impedance for analog sources is 10 kΩ. As the source impedance is decreased, the acquisition time may be decreased. After the analog input channel is selected (or changed), an ADC acquisition time must be completed before the conversion can be started. To calculate the minimum acquisition time, Equation 27-1 may be used. This equation assumes an error of 1/2 LSb. The 1/2 LSb error is the maximum error allowed for the ADC to meet its specified resolution.

Equation 27-1. Acquisition Time Example

Assumptions: Temperature = 50°C; External impedance = 10 kΩ; V_{DD} = 5.0V

T_{ACQ} = Amplifier Settling Time + Hold Capacitor Charging Time + Temperature Coefficient

$$T_{ACQ} = T_{AMP} + T_C + T_{COFF}$$

$$T_{ACQ} = 2\,\mu s + T_C + \left[\left(Temperature - 25°C\right)\left(0.05\,\mu s/°C\right)\right]$$

The value for T_C can be approximated with the following equations:

$$V_{APPLIED}\left(1 - \frac{1}{\left(2^{n+1}\right) - 1}\right) = V_{CHOLD}$$; [1] V_{CHOLD} charged to within ½ lsb

$$V_{APPLIED}\left(1 - e^{\frac{-T_C}{RC}}\right) = V_{CHOLD}$$; [2] V_{CHOLD} charge response to $V_{APPLIED}$

$$V_{APPLIED}\left(1 - e^{\frac{-T_C}{RC}}\right) = V_{APPLIED}\left(1 - \frac{1}{\left(2^{n+1}\right) - 1}\right)$$; Combining [1] and [2]

Note: Where n = ADC resolution in bits

Solving for T_C:

$$T_C = -C_{HOLD}(R_{IC} + R_{SS} + R_S)\ ln\ (1/2047)$$

$$T_C = -10\,pF(1\,k\Omega + 7\,k\Omega + 10\,k\Omega)\ ln\ (0.0004885)$$

$$T_C = 1.37\,\mu s$$

Therefore:

$$T_{ACQ} = 2\,\mu s + 1.37\,\mu s + \left[\left(50°C - 25°C\right)\left(0.05\,\mu s/°C\right)\right]$$

$$T_{ACQ} = 4.62\,\mu s$$

Important:

- The reference voltage (V_{REF}) has no effect on the equation, since it cancels itself out.
- The charge holding capacitor (C_{HOLD}) is not discharged after each conversion.
- The maximum recommended impedance for analog sources is 10 kΩ. This is required to meet the pin leakage specification.

Figure 27-4. Analog Input Model

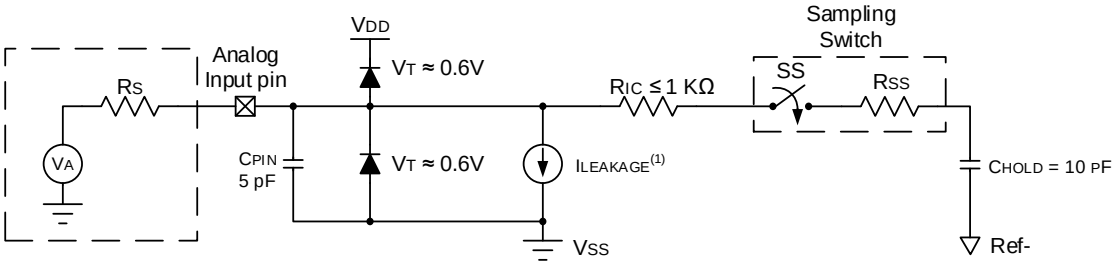

Legend:

C_{PIN}	= Input Capacitance
$I_{LEAKAGE}$	= Leakage Current at the pin due to various junctions
R_{IC}	= Interconnect Resistance
R_S	= Source Impedance
V_A	= Analog Voltage
V_T	= Diode Forward Voltage
SS	= Sampling Switch
R_{SS}	= Resistance of the Sampling Switch
C_{HOLD}	= Sample/Hold Capacitance

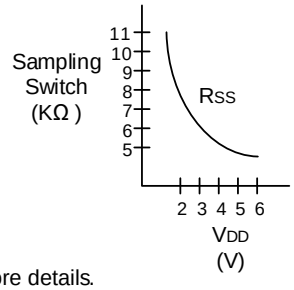

Note:

1. Refer to the *Electrical Specifications* section of the device data sheet for more details.

Figure 27-5. ADC Transfer Function

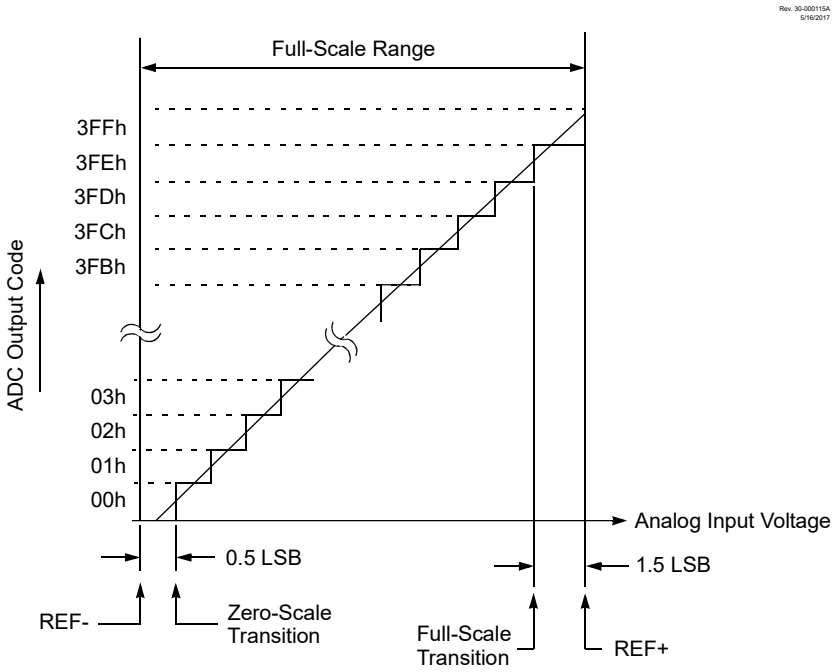

27.4 Register Definitions: ADC Control

Table 27-2. ADC Long Bit Name Prefixes

Peripheral	Bit Name Prefix
ADC	AD

27.4.1 ADCON0

Name: ADCON0
Offset: 0x09D

ADC Control Register 0

Bit	7	6	5	4	3	2	1	0
	CHS[5:0]						GO	ON
Access	R/W	R/W	R/W	R/W	R/W	R/W	R/W/HS/HC	R/W
Reset	0	0	0	0	0	0	0	0

Bits 7:2 – CHS[5:0] Analog Channel Select

CHS	Selected Channel
111111-011111	Reserved
011110	FVR Buffer 1
011101-011100	Reserved
011011	V_{SS}
011010-010110	Reserved
010101	RC5(1)
010100	RC4(1)
010011	RC3(1)
010010	RC2(1)
010001-010000	Reserved
001111	RB7(2)
001110	RB6(2)
001101	RB5(2)
001100-000110	Reserved
000101	RA5
000100	RA4
000011	Reserved
000010	RA2
000001	RA1
000000	RA0

Notes:
1. Only available on 14/20-pin devices (PIC16F15223/24/43/44)
2. Only available on 20-pin devices (PIC16F15243/44)

Bit 1 – GO ADC Conversion Status

Value	Description
1	ADC conversion cycle in progress. Setting this bit starts an ADC conversion cycle. This bit is automatically cleared by hardware when the ADC conversion has completed.
0	ADC conversion completed/not in progress

Bit 0 – ON ADC Enable

Value	Description
1	ADC is enabled
0	ADC is disabled an consumes no operating current

27.4.2 ADCON1

Name: ADCON1
Offset: 0x09E

ADC Control Register 1

Bit	7	6	5	4	3	2	1	0
	FM	CS[2:0]					PREF[1:0]	
Access	R/W	R/W	R/W	R/W			R/W	R/W
Reset	0	0	0	0			0	0

Bit 7 – FM ADC Result Format/Alignment Selection

Value	Description
1	Right-justified. The six Most Significant bits of ADRESH are zero-filled.
0	Left-justified. The six Least Significant bits of ADRESL are zero-filled.

Bits 6:4 – CS[2:0] ADC Conversion Clock Select

Value	Description
111	ADCRC
110	$F_{OSC}/64$
101	$F_{OSC}/16$
100	$F_{OSC}/4$
011	ADCRC
010	$F_{OSC}/32$
001	$F_{OSC}/8$
000	$F_{OSC}/2$

Bits 1:0 – PREF[1:0] ADC Positive Voltage Reference Configuration

Value	Description
11	V_{REF}+ is connected to internal Fixed Voltage Reference (FVR)
10	V_{REF}+ is connected to external V_{REF}+ pin
01	Reserved
00	V_{REF}+ is connected to V_{DD}

27.4.3 ADACT

Name: ADACT
Offset: 0x09F

ADC Auto-Conversion Trigger Source Selection Register

Bit	7	6	5	4	3	2	1	0
					ACT[3:0]			
Access					R/W	R/W	R/W	R/W
Reset					0	0	0	0

Bits 3:0 – ACT[3:0] Auto-Conversion Trigger Select

ACT	Auto-conversion Trigger Source
1111-1110	Reserved
1101	Software read of ADRESH
1100-1010	Reserved
1001	Interrupt-on-change Interrupt Flag
001000	PWM4_OUT
0111	PWM3_OUT
0110	CCP2_OUT
0101	CCP1_OUT
0100	TMR2_postscaled_OUT
0011	TMR1_overflow
0010	TMR0_overflow
0001	Pin selected by ADACTPPS
0000	External Trigger Disabled

© 2020-2022 Microchip Technology Inc.
and its subsidiaries

27.4.4 ADRES

Name: ADRES
Offset: 0x09B

ADC Result Register

Bit	15	14	13	12	11	10	9	8
	ADRES[15:8]							
Access	R/W	R/W	R/W	R/W	R/W	R/W	R/W	R/W
Reset	0	0	0	0	0	0	0	0

Bit	7	6	5	4	3	2	1	0
	ADRES[7:0]							
Access	R/W	R/W	R/W	R/W	R/W	R/W	R/W	R/W
Reset	0	0	0	0	0	0	0	0

Bits 15:0 – ADRES[15:0] ADC Sample Result

Notes: The individual bytes in this multibyte register can be accessed with the following register names:

- ADRESH: Accesses the high byte ADRES[15:18]
- ADRESL: Accesses the low byte ADRES[7:0]

27.5 Register Summary - ADC

Offset	Name	Bit Pos.	7	6	5	4	3	2	1	0
0x00 ... 0x9A	Reserved									
0x9B	ADRES	7:0	ADRES[7:0]							
		15:8	ADRES[15:8]							
0x9D	ADCON0	7:0	CHS[5:0]						GO	ON
0x9E	ADCON1	7:0	FM	CS[2:0]					PREF[1:0]	
0x9F	ADACT	7:0					ACT[3:0]			

28. Charge Pump

This family of devices offers a dedicated charge pump, which is controlled through the Charge Pump Control (CPCON) register. The primary purpose of the charge pump is to supply a constant voltage to the gates of transistor devices contained in analog peripherals, signal and reference input pass-gates, and to prevent degradation of transistor performance at low operating voltages.

The charge pump offers the following modes:

- Manually Enabled
- Automatically Enabled
- Disabled

28.1 Manually Enabled

The charge pump can be manually enabled via the Charge Pump Enable (CPON) bits. When the CPON bits are configured as '11', the charge pump is enabled. In this case, the charge pump provides additional voltage to all analog systems, regardless of V_{DD} levels, but also consumes additional current.

28.2 Automatically Enabled

The charge pump can also be enabled automatically. This allows the application to determine when to enable the charge pump. If the charge pump is enabled while V_{DD} levels are above a sufficient threshold, the charge pump does not improve analog performance, but also consumes additional current. Allowing hardware to monitor V_{DD} and determine when to enable the charge pump prevents unnecessary current consumption.

When the CPON bits are configured as '10', charge pump hardware monitors V_{DD} and compares the V_{DD} levels to a reference voltage threshold (V_{AUTO}), which is set to 4.096V. When hardware detects a V_{DD} level lower than the threshold, the charge pump is automatically enabled. If V_{DD} returns to a level above the threshold, hardware automatically disables the charge pump.

When the CPON bits are configured as '01', charge pump hardware waits for an analog peripheral, such as the ADC, to be enabled before monitoring V_{DD}. In this case, charge pump hardware monitors all analog peripherals, and once an analog peripheral is enabled, hardware begins to compare V_{DD} to V_{AUTO}. When hardware detects a V_{DD} level lower than the threshold, hardware enables the charge pump. If V_{DD} returns to a level above the threshold, or if the analog peripheral is disabled, the charge pump is automatically disabled.

28.3 Disabled

The charge pump is disabled by default (CPON = 00). Clearing the CPON bits will disable the charge pump.

28.4 Charge Pump Threshold

The Charge Pump Threshold (CPT) bit indicates whether or not V_{DD} is at an acceptable operating level. Charge pump hardware compares V_{DD} to the threshold voltage (V_{AUTO}), which is set at 4.096V. If V_{DD} is above V_{AUTO}, the CPT bit is set (CPT = 1). If V_{DD} is below V_{AUTO}, CPT is clear (CPT = 0).

28.5 Charge Pump Ready

The Charge Pump Ready Status (CPRDY) bit indicates whether or not the charge pump is ready for use. When CPRDY is set (CPRDY = 1), the charge pump has reached a steady-state operation and is ready for use. When CPRDY is clear (CPRDY = 0), the charge pump is either in the OFF state or has not reached a steady-state operation.

© 2020-2022 Microchip Technology Inc.
and its subsidiaries

28.6 Register Definitions: Charge Pump

28.6.1 CPCON

Name: CPCON
Offset: 0x009A

Charge Pump Control Register

Bit	7	6	5	4	3	2	1	0
	CPON[1:0]						CPT	CPRDY
Access	R/W	R/W					R	R
Reset	0	0					0	0

Bits 7:6 – CPON[1:0]
Charge Pump Enable

Value	Description
11	Charge pump is enabled
10	Charge pump is automatically enabled when $V_{DD} < V_{AUTO}$ (V_{AUTO} = 4.096V)
01	Charge pump is automatically enabled when an analog peripheral is enabled (ADCON0.ON = 1) and $V_{DD} < V_{AUTO}$
00	Charge pump is disabled

Bit 1 – CPT
Charge Pump Threshold

Value	Description
1	V_{DD} is above the charge pump auto-enable threshold (V_{AUTO})
0	V_{DD} is below the charge pump auto-enable threshold (V_{AUTO})

Bit 0 – CPRDY
Charge Pump Ready Status

Value	Description
1	Charge pump has reached a steady-state operation
0	Charge pump is Off or has not reached a steady-state operation

29. Instruction Set Summary

The PIC16F152 devices incorporate the standard set of 50 PIC16 core instructions. Each instruction is a 14-bit word containing the operation code (opcode) and all required operands. The opcodes are broken into three broad categories:

- Byte-Oriented
- Bit-Oriented
- Literal and Control

The literal and control category contains the most varied instruction word format.

Table 29-3 lists the instructions recognized by the XC8 assembler.

All instructions are executed within a single instruction cycle, with the following exceptions, which may take two or three cycles:

- Subroutine entry takes two cycles (`CALL`, `CALLW`)
- Returns from interrupts or subroutines take two cycles (`RETURN`, `RETLW`, `RETFIE`)
- Program branching takes two cycles (`GOTO`, `BRA`, `BRW`, `BTFSS`, `BTFSC`, `DECFSZ`, `INCSFZ`)
- One additional instruction cycle will be used when any instruction references an indirect file register, and the file select register is pointing to program memory

One instruction cycle consists of four oscillator cycles; for an oscillator frequency of 4 MHz, this gives a nominal instruction execution rate of 1 MHz.

All instruction examples use the format '`0xhh`' to represent a hexadecimal number, where '`h`' signifies a hexadecimal digit.

29.1 Read-Modify-Write Operations

Any instruction that specifies a file register as part of the instruction performs a Read-Modify-Write (RMW) operation. The register is read, the data is modified, and the result is stored according to either the Working (W) register, or the originating file register, depending on the state of the destination designator 'd' (see Table 29-1 for more information). A read operation is performed on a register even if the instruction writes to that register.

Table 29-1. Opcode Field Descriptions

Field	Description
f	Register file address (`0x00` to `0x7F`)
W	Working register (accumulator)
b	Bit address within an 8-bit file register
k	Literal field, constant data or label
x	"Don't care" location (= `0` or `1`). The assembler will generate code with x = `0`. It is the recommended form of use for compatibility with all Microchip software tools.
d	Destination select; d = `0`: store result in W, d = `1`: store result in file register f.
n	FSR or INDF number. (0-1)
mm	Pre/post increment/decrement mode selection

Table 29-2. Abbreviation Descriptions

Field	Description
PC	Program Counter

.....continued

Field	Description
$\overline{TO}$	Time-Out bit
C	Carry bit
DC	Digit Carry bit
Z	Zero bit
$\overline{PD}$	Power-Down bit

29.2 Standard Instruction Set

Table 29-3. Instruction Set

Mnemonic, Operands		Description	Cycles	14-Bit Opcode				Status Affected	Notes
				MSb			LSb		
BYTE-ORIENTED OPERATIONS									
ADDWF	f, d	Add WREG and f	1	00	0111	dfff	ffff	C, DC, Z	2
ADDWFC	f, d	Add WREG and Carry bit to f	1	11	1101	dfff	ffff	C, DC, Z	2
ANDWF	f, d	AND WREG with f	1	00	0101	dfff	ffff	Z	2
ASRF	f, d	Arithmetic Right Shift	1	11	0111	dfff	ffff	C, Z	2
LSLF	f, d	Logical Left Shift	1	11	0101	dfff	ffff	C, Z	2
LSRF	f, d	Logical Right Shift	1	11	0110	dfff	ffff	C, Z	2
CLRF	f	Clear f	1	00	0001	1fff	ffff	Z	2
CLRW	–	Clear WREG	1	00	0001	0000	00xx	Z	
COMF	f, d	Complement f	1	00	1001	dfff	ffff	Z	2
DECF	f, d	Decrement f	1	00	0011	dfff	ffff	Z	2
INCF	f, d	Increment f	1	00	1010	dfff	ffff	Z	2
IORWF	f, d	Inclusive OR WREG with f	1	00	0100	dfff	ffff	Z	2
MOVF	f, d	Move f	1	00	1000	dfff	ffff	Z	2
MOVWF	f	Move WREG to f	1	00	0000	1fff	ffff	None	2
RLF	f, d	Rotate Left f through Carry	1	00	1101	dfff	ffff	C	2

.....continued

Mnemonic, Operands		Description	Cycles	14-Bit Opcode MSb			LSb	Status Affected	Notes
RRF	f, d	Rotate Right f through Carry	1	00	1100	dfff	ffff	C	2
SUBWF	f, d	Subtract WREG from f	1	00	0010	dfff	ffff	C, DC, Z	2
SUBWFB	f, d	Subtract WREG from f with Borrow	1	11	1011	dfff	ffff	C, DC, Z	2
SWAPF	f, d	Swap nibbles in f	1	00	1110	dfff	ffff	None	2
XORWF	f, d	Exclusive OR WREG with f	1	00	0110	dfff	ffff	Z	2
BYTE-ORIENTED SKIP OPERATIONS									
DECFSZ	f, d	Decrement f, Skip if 0	1(2)	00	1011	dfff	ffff	None	1, 2
INCFSZ	f, d	Increment f, Skip if 0	1(2)	00	1111	dfff	ffff	None	1, 2
BIT-ORIENTED FILE REGISTER OPERATIONS									
BCF	f, b	Bit Clear f	1	01	00bb	bfff	ffff	None	2
BSF	f, b	Bit Set f	1	01	01bb	bfff	ffff	None	2
BIT-ORIENTED SKIP OPERATIONS									
BTFSC	f, b	Bit Test f, Skip if Clear	1(2)	01	10bb	bfff	ffff	None	1, 2
BTFSS	f, b	Bit Test f, Skip if Set	1(2)	1010	11bb	bfff	ffff	None	1, 2
LITERAL OPERATIONS									
ADDLW	k	Add literal and WREG	1	11	1110	kkkk	kkkk	C, DC, Z	
ANDLW	k	AND literal with WREG	1	11	1001	kkkk	kkkk	Z	
IORLW	k	Inclusive OR literal with WREG	1	11	1000	kkkk	kkkk	Z	
MOVLB	k	Move literal to BSR	1	00	000	0k	kkkk	None	
MOVLP	k	Move literal to PCLATH	1	11	0001	1kkk	kkkk	None	
MOVLW	k	Move literal to W	1	11	0000	kkkk	kkkk	None	
SUBLW	k	Subtract W from literal	1	11	1100	kkkk	kkkk	C, DC, Z	
XORLW	k	Exclusive OR literal with W	1	11	1010	kkkk	kkkk	Z	
CONTROL OPERATIONS									

.....continued

Mnemonic, Operands		Description	Cycles	14-Bit Opcode MSb			LSb	Status Affected	Notes
BRA	k	Relative Branch	2	11	001k	kkkk	kkkk	None	
BRW	—	Relative Branch with WREG	2	00	0000	0000	1011	None	
CALL	k	Call Subroutine	2	10	0kkk	kkkk	kkkk	None	
CALLW	—	Call Subroutine with WREG	2	00	0000	0000	1010	None	
GOTO	k	Go to address	2	10	1kkk	kkkk	kkkk	None	
RETFIE	k	Return from interrupt	2	00	0000	0000	1001	None	
RETLW	k	Return with literal in WREG	2	11	0100	kkkk	kkkk	None	
RETURN	—	Return from Subroutine	2	00	0000	0000	1000	None	
INHERENT OPERATIONS									
CLRWDT	—	Clear Watchdog Timer	1	00	0000	0110	0100	$\overline{TO}$, $\overline{PD}$	
NOP	—	No Operation	1	00	0000	0000	0000	None	
RESET	—	Software device Reset	1	00	0000	0000	0001	None	
SLEEP	—	Go into Standby mode	1	00	0000	0110	0011	$\overline{TO}$, $\overline{PD}$	
TRIS	f	Load TRIS register with WREG	1	00	0000	0110	0fff	None	
C-COMPILER OPTIMIZED									
ADDFSR	n, k	Add Literal k to FSRn	1	11	0001	0nkk	kkkk	None	
MOVIW	n, mm	Move Indirect FSRn to WREG with pre/post inc/dec modifier, mm	1	00	0000	0001	0nmm	Z	2, 3
	k[n]	Move INDFn to WREG, Indexed Indirect.	1	11	1111	0nkk	kkkk	Z	2
MOVWI	n, mm	Move WREG to Indirect FSRn with pre/post inc/dec modifier, mm	1	00	0000	0001	1nmm	None	2, 3
	k[n]	Move WREG to INDFn, Indexed Indirect.	1	11	1111	1nkk	kkkk	None	2

Notes:

1. If the Program Counter (PC) is modified, or a conditional test is true, the instruction requires two cycles. The second cycle is executed as a `NOP`.
2. If this instruction addresses an INDF register and the MSb of the corresponding FSR is set, this instruction will require one additional instruction cycle.
3. Details on `MOVIW` and `MOVWI` instruction descriptions are available in the next section.

29.2.1 Standard Instruction Set

ADDFSR	Add Literal to FSRn
Syntax:	[*label*] ADDFSR FSRn, k
Operands:	-32 ≤ k ≤ 31; n ∈ [0, 1]
Operation:	FSR(n) + k → FSR(n)
Status Affected:	None
Description:	The signed 6-bit literal ‘k’ is added to the contents of the FSRnH:FSRnL register pair. FSRn is limited to the range `0000h-FFFFh`. Moving beyond these bounds will cause the FSR to wrap-around.

ADDLW	Add Literal to W
Syntax:	[*label*] ADDLW k
Operands:	0 ≤ k ≤ 255
Operation:	(W) + k → (W)
Status Affected:	C, DC, Z
Description:	The contents of W are added to the 8-bit literal ‘k’ and the result is placed in W.

ADDWF	Add W to f
Syntax:	[*label*] ADDWF f, d
Operands:	0 ≤ f ≤ 127 d ∈ [0,1]
Operation:	(W) + (f) → dest
Status Affected:	C, DC, Z
Description:	Add the contents of the W register with register ‘f’. If ‘d’ is ‘`0`’, the result is stored in the W register. If ‘d’ is ‘`1`’, the result is stored back in register ‘f’.

ADDWFC	Add W and Carry Bit to f
Syntax:	[*label*] ADDWFC f {,d}
Operands:	0 ≤ f ≤ 127 d ∈ [0,1]
Operation:	(W) + (f) + (C) → dest
Status Affected:	C, DC, Z

.....continued

ADDWFC	Add W and Carry Bit to f
Description:	Add W, the Carry flag and data memory location ‘f’. If ‘d’ is ‘0’, the result is placed in W. If ‘d’ is ‘1’, the result is placed in data memory location ‘f’.

ANDLW	AND Literal with W
Syntax:	[*label*] ANDLW k
Operands:	0 ≤ k ≤ 255
Operation:	(W) .AND. k → (W)
Status Affected:	Z
Description:	The contents of W are AND’ed with the 8-bit literal ‘k’. The result is placed in W.

ANDWF	AND W with f
Syntax:	[*label*] ANDWF f, d
Operands:	0 ≤ f ≤ 127 d ∈ [0,1]
Operation:	(W) .AND. (f) → dest
Status Affected:	Z
Description:	AND the W register with register ‘f’. If ‘d’ is ‘0’, the result is stored in the W register. If ‘d’ is ‘1’, the result is stored back in register ‘f’.

ASRF	Arithmetic Right Shift
Syntax:	[*label*] ASRF f, d
Operands:	0 ≤ f ≤ 127 d ∈ [0,1]
Operation:	(f[7]) → dest[7] (f[7:1]) → dest[6:0] (f[0]) → C
Status Affected:	C, Z
Description:	The contents of register ‘f’ are shifted one bit to the right through the Carry flag. The MSb remains unchanged. If ‘d’ is ‘0’, the result is placed in W. If ‘d’ is ‘1’, the result is stored back in register ‘f’. **Register f → C**

BCF	Bit Clear f
Syntax:	[*label*] BCF f, b
Operands:	0 ≤ f ≤ 127 0 ≤ b ≤ 7
Operation:	0 → f[b]
Status Affected:	None

.....continued

BCF	Bit Clear f
Description:	Bit ‘b’ in register ‘f’ is cleared.

BRA	Relative Branch
Syntax:	[*label*] BRA label [*label*] BRA $+k
Operands:	-256 ≤ label - PC + ≤ 255 -256 ≤ k ≤ 255
Operation:	(PC) + 1 + k → PC
Status Affected:	None
Description:	Add the signed 9-bit literal ‘k’ to the PC. Since the PC will have incremented to fetch the next instruction, the new address will be PC + 1 + k. This instruction is a two-cycle instruction. This branch has a limited range.

BRW	Relative Branch with W
Syntax:	[*label*] BRW
Operands:	None
Operation:	(PC) + (W) → PC
Status Affected:	None
Description:	Add the contents of W (unsigned) to the PC. Since the PC will have incremented to fetch the next instruction, the new address will be PC + 1 + (W). This instruction is a two-cycle instruction.

BSF	Bit Set f
Syntax:	[*label*] BSF f, b
Operands:	0 ≤ f ≤ 127 0 ≤ b ≤ 7
Operation:	1 → (f[b])
Status Affected:	None
Description:	Bit ‘b’ in register ‘f’ is set.

BTFSC	Bit Test File, Skip If Clear
Syntax:	[*label*] BTFSC f, b
Operands:	0 ≤ f ≤ 127 0 ≤ b ≤ 7
Operation:	skip if (f[b]) = 0
Status Affected:	None

.....continued

BTFSC	Bit Test File, Skip If Clear
Description:	If bit 'b' in register 'f' is '1', the next instruction is executed. If bit 'b', in register 'f', is '0', the next instruction is discarded, and a NOP is executed instead, making this a two-cycle instruction.

BTFSS	Bit Test File, Skip If Set
Syntax:	[*label*] BTFSS f, b
Operands:	0 ≤ f ≤ 127 0 ≤ b < 7
Operation:	skip if (f[b]) = 1
Status Affected:	None
Description:	If bit 'b' in register 'f' is '0', the next instruction is executed. If bit 'b' is '1', then the next instruction is discarded, and a NOP is executed instead, making this a two-cycle instruction.

CALL	Subroutine Call
Syntax:	[*label*] CALL k
Operands:	0 ≤ k ≤ 2047
Operation:	(PC) + 1 → TOS, k → PC[10:0], (PCLATH[6:3]) → PC[14:11]
Status Affected:	None
Description:	Call Subroutine. First, return address (PC + 1) is pushed onto the stack. The 11-bit immediate address is loaded into PC bits [10:0]. The upper bits of the PC are loaded from PCLATH. CALL is a two-cycle instruction.

CALLW	Subroutine Call with W
Syntax:	[*label*] CALLW
Operands:	None
Operation:	(PC) + 1 → TOS, (W) → PC[7:0], (PCLATH[6:0]) → PC[14:8]
Status Affected:	None
Description:	Subroutine call with W. First, the return address (PC + 1) is pushed onto the return stack. Then, the contents of W is loaded into PC[7:0], and the contents of PCLATH into PC[14:8]. CALLW is a two-cycle instruction.

CLRF	Clear f
Syntax:	[*label*] CLRF f
Operands:	0 ≤ f ≤ 127

.....continued

CLRF	Clear f
Operation:	000h → f 1 → Z
Status Affected:	Z
Description:	The contents of register ‘f’ are cleared and the Z bit is set.

CLRW	Clear W
Syntax:	[*label*] CLRW
Operands:	None
Operation:	00h → (W) 1 → Z
Status Affected:	Z
Description:	W register is cleared. Zero (Z) bit is set.

CLRWDT	Clear Watchdog Timer
Syntax:	[*label*] CLRWDT
Operands:	None
Operation:	00h → WDT, 00h → WDT prescaler, 1 → $\overline{TO}$, 1 → $\overline{PD}$
Status Affected:	$\overline{TO}$, $\overline{PD}$
Description:	The `CLRWDT` instruction resets the Watchdog Timer. It also resets the prescaler of the WDT. Status bits, $\overline{TO}$ and $\overline{PD}$, are set.

COMF	Complement f
Syntax:	[*label*] COMF f, d
Operands:	0 ≤ f ≤ 127 d ∈ [0,1]
Operation:	($\bar{f}$) → dest
Status Affected:	Z
Description:	The contents of register ‘f’ are complemented. If ‘d’ is ‘`0`’, the result is stored in W. If ‘d’ is ‘`1`’, the result is stored back in register ‘f’.

DECF	Decrement f
Syntax:	[*label*] DECF f, d
Operands:	0 ≤ f ≤ 127 d ∈ [0,1]

.....continued

DECF	Decrement f
Operation:	(f) – 1 → dest
Status Affected:	Z
Description:	Decrement register ‘f’. If ‘d’ is ‘0’, the result is stored in the W register. If ‘d’ is ‘1’, the result is stored back in register ‘f’.

DECFSZ	Decrement f, Skip If 0
Syntax:	[*label*] DECFSZ f, d
Operands:	0 ≤ f ≤ 127 d ∈ [0,1]
Operation:	(f) – 1 → dest, skip if result = 0
Description:	The contents of register ‘f’ are decremented. If ‘d’ is ‘0’, the result is placed in the W register. If ‘d’ is ‘1’, the result is placed back in register ‘f’. If the result is ‘1’, the next instruction is executed. If the result is ‘0’, then a NOP is executed instead, making it a two-cycle instruction.

GOTO	Unconditional Branch
Syntax:	[*label*] GOTO k
Operands:	0 ≤ k ≤ 2047
Operation:	k → PC[10:0] PCLATH[6:3] → PC[14:11]
Status Affected:	None
Description:	GOTO is an unconditional branch. The 11-bit immediate value is loaded into PC bits [10:0]. The upper bits of PC are loaded from PCLATH[4:3]. GOTO is a two-cycle instruction.

INCF	Increment f
Syntax:	[*label*] INCF f, d
Operands:	0 ≤ f ≤ 127 d ∈ [0,1]
Operation:	(f) + 1 → dest
Status Affected:	Z
Description:	The contents of register ‘f’ are incremented. If ‘d’ is ‘0’, the result is placed in the W register. If ‘d’ is ‘1’, the result is placed back in register ‘f’.

INCFSZ	Increment f, Skip If 0
Syntax:	[*label*] INCFSZ f, d

.....continued

INCFSZ	Increment f, Skip If 0
Operands:	0 ≤ f ≤ 127 d ∈ [0,1]
Operation:	(f) + 1 → dest, skip if result = 0
Status Affected:	None
Description:	The contents of register 'f' are incremented. If 'd' is '0', the result is placed in the W register. If 'd' is '1', the result is placed back in register 'f'. If the result is '1', the next instruction is executed. If the result is '0', a NOP is executed instead, making it a two-cycle instruction.

IORLW	Inclusive OR Literal with W
Syntax:	[*label*] IORLW k
Operands:	0 ≤ k ≤ 255
Operation:	(W) .OR. k → (W)
Status Affected:	Z
Description:	The contents of W are ORed with the 8-bit literal 'k'. The result is placed in W.

IORWF	Inclusive OR W with f
Syntax:	IORWF f, d
Operands:	0 ≤ f ≤ 127 d ∈ [0,1]
Operation:	(W) .OR. (f) → dest
Status Affected:	Z
Description:	Inclusive OR the W register with register 'f'. If 'd' is '0', the result is placed in the W register. If 'd' is '1', the result is placed back in register 'f'.

LSLF	Logical Left Shift
Syntax:	[*label*] LSLF f {,d}
Operands:	0 ≤ f ≤ 127 d ∈ [0,1]
Operation:	(f[7]) → C (f[6:0]) → dest[7:1] 0 → dest[0]
Status Affected:	C, Z

.....continued

LSLF	Logical Left Shift
Description:	The contents of register ‘f’ are shifted one bit to the left through the Carry flag. A ‘0’ is shifted into the LSb. If ‘d’ is ‘0’, the result is placed in W. If ‘d’ is ‘1’, the result is stored back in register ‘f’. **C ← Register f ← 0**

LSRF	Logical Right Shift
Syntax:	[*label*] LSRF f {,d}
Operands:	0 ≤ f ≤ 127 d ∈ [0,1]
Operation:	0 → dest[7] (f[7:1]) → dest[6:0], (f[0]) → C
Status Affected:	C, Z
Description:	The contents of register ‘f’ are shifted one bit to the right through the Carry flag. A ‘0’ is shifted into the MSb. If ‘d’ is ‘0’, the result is placed in W. If ‘d’ is ‘1’, the result is stored back in register ‘f’. **0 → Register f → C**

MOVF	Move f	
Syntax:	[*label*] MOVF f, d	
Operands:	0 ≤ f ≤ 127 d ∈ [0,1]	
Operation:	f → dest	
Status Affected:	Z	
Description:	The contents of register f is moved to a destination dependent upon the status of d. If d = 0, destination is W register. If d = 1, the destination is file register f itself. d = 1 is useful to test a file register since status flag Z is affected.	
Words:	1	
Cycles:	1	

Example:	`MOVF  FSR, 0`
After Instruction W = value in FSR register Z = 1	

MOVIW	Move INDFn to W
Syntax:	[*label*] MOVIW ++FSRn [*label*] MOVIW --FSRn [*label*] MOVIW FSRn++ [*label*] MOVIW FSRn-- [*label*] MOVIW k[FSRn]
Operands:	n ∈ [0,1] mm ∈ [00,01,10,11] -32 ≤ k ≤ 31
Operation:	INDFn → (W) Effective address is determined by • FSR + 1 (preincrement) • FSR - 1 (predecrement) • FSR + k (relative offset) After the Move, the FSR value will be either: • FSR + 1 (all increments) • FSR - 1 (all decrements) • Unchanged
Status Affected:	Z

MODE	SYNTAX	mm
Preincrement	++FSRn	00
Predecrement	--FSRn	01
Postincrement	FSRn++	10
Postdecrement	FSRn--	11

Description:	This instruction is used to move data between W and one of the indirect registers (INDFn). Before/after this move, the pointer (FSRn) is updated by pre/post incrementing/decrementing it. The INDFn registers are not physical registers. Any instruction that accesses an INDFn register actually accesses the register at the address specified by the FSRn. FSRn is limited to the range `0000h - FFFFh`. Incrementing/decrementing it beyond these bounds will cause it to wrap-around.

MOVLB	Move Literal to BSR
Syntax:	[*label*] MOVLB k
Operands:	0 ≤ k ≤ 127
Operation:	k → BSR
Status Affected:	None
Description:	The 6-bit literal ‘k’ is loaded into the Bank Select Register (BSR).

MOVLP	Move Literal to PCLATH
Syntax:	[*label*] MOVLP k
Operands:	0 ≤ k ≤ 127

.....continued

MOVLP	Move Literal to PCLATH
Operation:	k → PCLATH
Status Affected:	None
Description:	The 7-bit literal ‘k’ is loaded into the PCLATH register.

MOVLW	Move Literal to W			
Syntax:	[*label*] MOVLW k			
Operands:	0 ≤ k ≤ 255			
Operation:	k → (W)			
Status Affected:	None			
Description:	The 8-bit literal ‘k’ is loaded into W register. The “don’t cares” will assemble as ‘0’s.			
Words:	1			
Cycles:	1			

Example:	MOVLW	5Ah
After Instruction W = 5Ah		

MOVWF	Move W to f			
Syntax:	[*label*] MOVWF f			
Operands:	0 ≤ f ≤ 127			
Operation:	(W) → f			
Status Affected:	None			
Description:	Move data from W to register ‘f’.			
Words:	1			
Cycles:	1			

Example:	MOVWF	LATA
Before Instruction LATA = FFh W = 4Fh After Instruction LATA = 4Fh W = 4Fh		

MOVWI	Move W to INDFn
Syntax:	[*label*] MOVWI ++FSRn [*label*] MOVWI --FSRn [*label*] MOVWI FSRn++ [*label*] MOVWI FSRn-- [*label*] MOVWI k[FSRn]
Operands:	n ∈ [0,1] mm ∈ [00,01,10,11] -32 ≤ k ≤ 31
Operation:	(W) → INDFn Effective address is determined by • FSR + 1 (preincrement) • FSR - 1 (predecrement) • FSR + k (relative offset) After the Move, the FSR value will be either: • FSR + 1 (all increments) • FSR - 1 (all decrements) • Unchanged
Status Affected:	None

MODE	SYNTAX	mm
Preincrement	++FSRn	00
Predecrement	--FSRn	01
Postincrement	FSRn++	10
Postdecrement	FSRn--	11

Description:	This instruction is used to move data between W and one of the indirect registers (INDFn). Before/after this move, the pointer (FSRn) is updated by pre/post incrementing/decrementing it. The INDFn registers are not physical registers. Any instruction that accesses an INDFn register actually accesses the register at the address specified by the FSRn. FSRn is limited to the range 0000h-FFFFh. Incrementing/decrementing it beyond these bounds will cause it to wrap-around. The increment/decrement operation on FSRn will not affect any Status bits.

NOP	No Operation			
Syntax:	[*label*] NOP			
Operands:	None			
Operation:	No operation			
Status Affected:	None			
Description:	No operation.			
Words:	1			
Cycles:	1			

Example:	`NOP`
None.	

RESET	Software Reset
Syntax:	[*label*] RESET
Operands:	None
Operation:	Execute a device Reset. Resets the $\overline{RI}$ flag of the PCON register.
Status Affected:	None
Description:	This instruction provides a way to execute a hardware Reset by software.

RETFIE	Return from Interrupt			
Syntax:	[*label*] RETFIE k			
Operands:	None			
Operation:	(TOS) → PC, 1 → GIE			
Status Affected:	None			
Description:	Return from Interrupt. Stack is POPed and Top-of-Stack (TOS) is loaded in the PC. Interrupts are enabled by setting the Global Interrupt Enable bit, GIE (INTCON[7]). This is a two-cycle instruction.			
Words:	1			
Cycles:	2			

Example:	`RETFIE`
After Interrupt PC = TOS GIE = `1`	

RETLW	Return Literal to W			
Syntax:	[*label*] RETLW k			
Operands:	0 ≤ k ≤ 255			
Operation:	k → (W), (TOS) → PC,			
Status Affected:	None			
Description:	The W register is loaded with the 8-bit literal ‘k’. The program counter is loaded from the top of the stack (the return address). This is a two-cycle instruction.			
Words:	1			
Cycles:	2			

Example:

```
     CALL TABLE            ; W contains table
; offset value
; W now has
; table value
   :
TABLE
ADDWF PC            ; W = offset
RETLW k1            ; Begin table
RETLW k2            ;
:
:
RETLW kn            ; End of table
```

Before Instruction
W = 07h

After Instruction

W = value of k8

RETURN	Return from Subroutine			
Syntax:	[*label*] RETURN			
Operands:	None			
Operation:	(TOS) → PC,			
Status Affected:	None			
Encoding:	0000	0000	0001	001s
Description:	Return from subroutine. The stack is POPped and the top of the stack (TOS) is loaded into the Program Counter. This is a two-cycle instruction.			

RLF	Rotate Left f through Carry			
Syntax:	[*label*] RLF f, d			
Operands:	0 ≤ f ≤ 127 d ∈ [0,1]			
Operation:	(f[n]) → dest[n + 1], (f[7]) → C, (C) → dest[0]			
Status Affected:	C			
Encoding:	0011	01da	ffff	ffff
Description:	The contents of register ‘f’ are rotated one bit to the left through the Carry flag. If ‘d’ is ‘0’, the result is placed in W. If ‘d’ is ‘1’, the result is stored back in register ‘f’ (default). 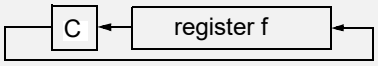			
Words:	1			
Cycles:	1			

Example:	`RLF`	`REG1, 0`
Before Instruction REG1 = `1110 0110` C = `0` After Instruction REG = `1110 0110` W = `1100 1100` C = `1`		

RRF	Rotate Right f through Carry
Syntax:	[*label*] RRF f, d
Operands:	0 ≤ f ≤ 127 d ∈ [0,1]
Operation:	(f[n]) → dest[n – 1], (f[0]) → C, (C) → dest[7]
Status Affected:	C
Description:	The contents of register ‘f’ are rotated one bit to the right through the Carry flag. If ‘d’ is ‘`0`’, the result is placed in W. If ‘d’ is ‘`1`’, the result is placed back in register ‘f’ (default). 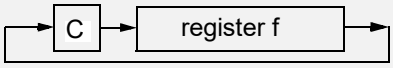

SLEEP	Enter Sleep Mode
Syntax:	[*label*] SLEEP
Operands:	None
Operation:	00h → WDT, 0 → WDT prescaler, 1 → $\overline{TO}$, 0 → $\overline{PD}$
Status Affected:	$\overline{TO}$, $\overline{PD}$
Description:	The Power-Down ($\overline{PD}$) Status bit is cleared. The Time-Out ($\overline{TO}$) Status bit is set. Watchdog Timer and its prescaler are cleared.

SUBLW	Subtract W from Literal
Syntax:	[*label*] SUBLW k
Operands:	0 ≤ k ≤ 255
Operation:	k – (W) → (W)
Status Affected:	C, DC, Z

.....continued

SUBLW	Subtract W from Literal
Description	The W register is subtracted (two's complement method) from the 8-bit literal 'k'. The result is placed in the W register. C = 0, W > k C = 1, W ≤ k DC = 0, W[3:0] > k[3:0] DC = 1, W[3:0] ≤ k[3:0]

SUBWF	Subtract W from f
Syntax:	[*label*] SUBWF f, d
Operands:	0 ≤ f ≤ 127 d ∈ [0,1]
Operation:	(f) - (W) → (dest)
Status Affected:	C, DC, Z
Description	Subtract (two's complement method) W register from register 'f'. If 'd' is '0', the result is stored in the W register. If 'd' is '1', the result is stored back in register 'f. C = 0, W > f C = 1, W ≤ f DC = 0, W[3:0] > f[3:0] DC = 1, W[3:0] ≤ f[3:0]

SUBWFB	Subtract W from f with Borrow
Syntax:	[*label*] SUBFWB f {,d}
Operands:	0 ≤ f ≤ 127 d ∈ [0,1]
Operation:	(W) – (f) – ($\overline{B}$) → dest
Status Affected:	C, DC, Z
Description:	Subtract W and the Borrow flag (Carry) from register 'f' (two's complement method). If 'd' is '0', the result is stored in W. If 'd' is '1', the result is stored back in register 'f'.

SWAPF	Swap Nibbles in f
Syntax:	[*label*] SWAPF f, d
Operands:	0 ≤ f ≤ 127 d ∈ [0,1]
Operation:	(f[3:0]) → dest[7:4], (f[7:4]) → dest[3:0]
Status Affected:	None

.....continued

SWAPF	Swap Nibbles in f
Description:	The upper and lower nibbles of register ‘f’ are exchanged. If ‘d’ is ‘0’, the result is placed in W. If ‘d’ is ‘1’, the result is placed in register ‘f’ (default).

TRIS	Load TRIS Register with W
Syntax:	[*label*] TRIS f
Operands:	5 ≤ f ≤ 7
Operation:	(W) → TRIS register ‘f’
Status Affected:	None
Description:	Move data from W register to TRIS register. When ‘f’ = 5, TRISA is loaded. When ‘f’ = 6, TRISB is loaded. When ‘f’ = 7, TRISC is loaded.

XORLW	Exclusive OR Literal with W
Syntax:	[*label*] XORLW k
Operands:	0 ≤ k ≤ 255
Operation:	(W) .XOR. k → (W)
Status Affected:	Z
Description:	The contents of W are XORed with the 8-bit literal ‘k’. The result is placed in W.

XORWF	Exclusive OR W with f
Syntax:	[*label*] XORWF f, d
Operands:	0 ≤ f ≤ 127 d ∈ [0,1]
Operation:	(W) .XOR. (f) → dest
Status Affected:	Z
Description:	Exclusive OR the contents of the W register with register ‘f’. If ‘d’ is ‘0’, the result is stored in the W register. If ‘d’ is ‘1’, the result is stored back in register ‘f’.

30. ICSP™ - In-Circuit Serial Programming™

ICSP programming allows customers to manufacture circuit boards with unprogrammed devices. Programming can be done after the assembly process, allowing the device to be programmed with the most recent firmware or a custom firmware. Five pins are needed for ICSP programming:

- ICSPCLK
- ICSPDAT
- $\overline{MCLR}/V_{PP}$
- V_{DD}
- V_{SS}

In Program/Verify mode, the program memory, User IDs and the Configuration bits are programmed through serial communications. The ICSPDAT pin is a bidirectional I/O used for transferring the serial data and the ICSPCLK pin is the clock input. For more information on ICSP, refer to the **"Family Programming Specification"**.

30.1 High-Voltage Programming Entry Mode

The device is placed into High-Voltage Programming Entry mode by holding the ICSPCLK and ICSPDAT pins low, then raising the voltage on $\overline{MCLR}/V_{PP}$ to V_{IH}.

30.2 Low-Voltage Programming Entry Mode

The Low-Voltage Programming Entry mode allows the PIC® Flash MCUs to be programmed using V_{DD} only, without high voltage. When the LVP Configuration bit is set to '1', the low-voltage ICSP programming entry is enabled. To disable the Low-Voltage ICSP mode, the LVP bit must be programmed to '0'.

Entry into the Low-Voltage Programming Entry mode requires the following steps:

1. $\overline{MCLR}$ is brought to V_{IL}.
2. A 32-bit key sequence is presented on ICSPDAT, while clocking ICSPCLK.

Once the key sequence is complete, $\overline{MCLR}$ must be held at V_{IL} for as long as Program/Verify mode is to be maintained.

If low-voltage programming is enabled (LVP = 1), the $\overline{MCLR}$ Reset function is automatically enabled and cannot be disabled. See the *$\overline{MCLR}$* section for more information.

The LVP bit can only be reprogrammed to '0' by using the High-Voltage Programming mode.

30.3 Common Programming Interfaces

Connection to a target device is typically done through an ICSP header. A commonly found connector on development tools is the RJ-11 in the 6P6C (6-pin, 6-connector) configuration. See Figure 30-1.

Figure 30-1. ICD RJ-11 Style Connector Interface

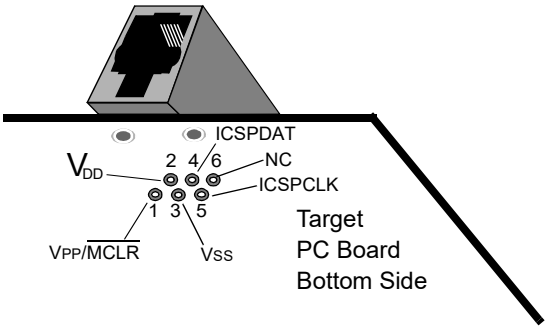

Pin Description

1 = $V_{PP}/\overline{MCLR}$

2 = V_{DD} Target

3 = V_{SS} (ground)

4 = ICSPDAT

5 = ICSPCLK

6 = No Connect

Another connector often found in use with the PICkit™ programmers is a standard 6-pin header with 0.1 inch spacing. Refer to Figure 30-2.

For additional interface recommendations, refer to the specific device programmer manual prior to PCB design.

It is recommended that isolation devices be used to separate the programming pins from other circuitry. The type of isolation is highly dependent on the specific application and may include devices such as resistors, diodes, or even jumpers. See Figure 30-3 for more information.

Figure 30-2. PICkit™ Programmer Style Connector Interface

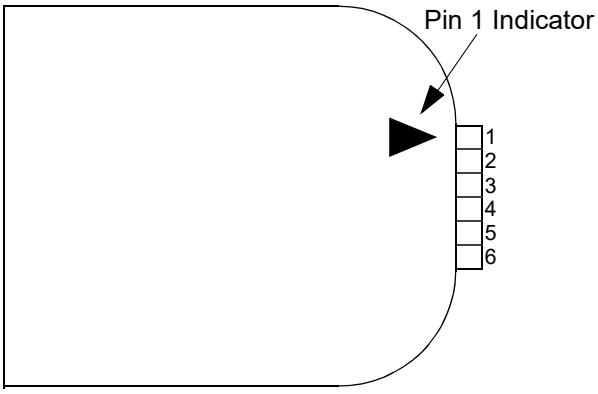

Pin Description[1]:

1 = $V_{PP}/\overline{MCLR}$

2 = V_{DD} Target

3 = V_{SS} (ground)

4 = ICSPDAT

5 = ICSPCLK

6 = No Connect

Note:

1. The 6-pin header (0.100" spacing) accepts 0.025" square pins.

Figure 30-3. Typical Connection for ICSP™ Programming

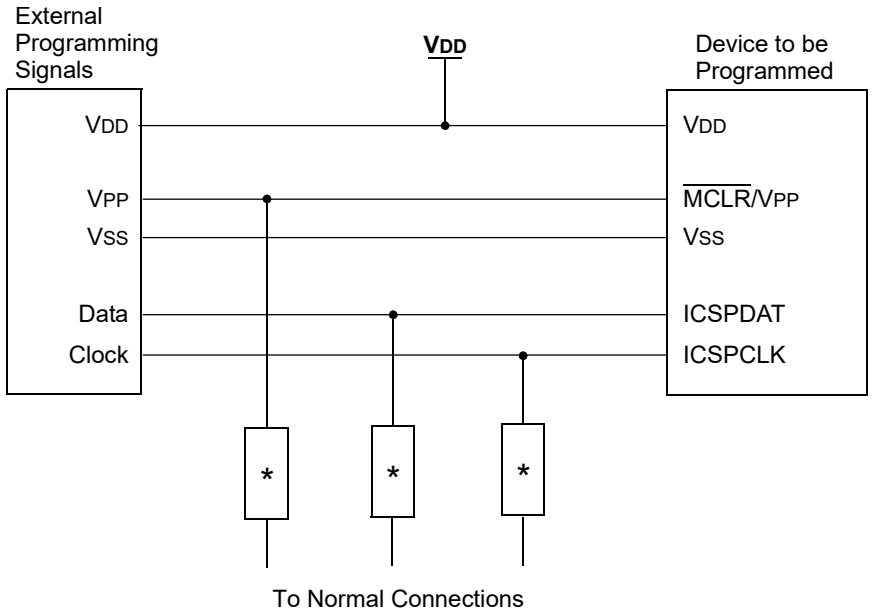

* Isolation devices (as required).

31. Register Summary

Offset	Name	Bit Pos.	7	6	5	4	3	2	1	0
0x00	INDF0	7:0	INDF0[7:0]							
0x01	INDF1	7:0	INDF1[7:0]							
0x02	PCL	7:0	PCL[7:0]							
0x03	STATUS	7:0				$\overline{TO}$	$\overline{PD}$	Z	DC	C
0x04	FSR0	7:0	FSR0[7:0]							
		15:8	FSR0[15:8]							
0x06	FSR1	7:0	FSR1[7:0]							
		15:8	FSR1[15:8]							
0x08	BSR	7:0			BSR[5:0]					
0x09	WREG	7:0	WREG[7:0]							
0x0A	PCLATH	7:0		PCLATH[6:0]						
0x0B	Reserved									
0x0C	PORTA	7:0			RA5	RA4	RA3	RA2	RA1	RA0
0x0D	PORTB	7:0	RB7	RB6	RB5	RB4				
0x0E	PORTC	7:0	RC7	RC6	RC5	RC4	RC3	RC2	RC1	RC0
0x0F ... 0x11	Reserved									
0x12	TRISA	7:0			TRISA5	TRISA4	Reserved	TRISA2	TRISA1	TRISA0
0x13	TRISB	7:0	TRISB7	TRISB6	TRISB5	TRISB4				
0x14	TRISC	7:0	TRISC7	TRISC6	TRISC5	TRISC4	TRISC3	TRISC2	TRISC1	TRISC0
0x15 ... 0x17	Reserved									
0x18	LATA	7:0			LATA5	LATA4		LATA2	LATA1	LATA0
0x19	LATB	7:0	LATB7	LATB6	LATB5	LATB4				
0x1A	LATC	7:0	LATC7	LATC6	LATC5	LATC4	LATC3	LATC2	LATC1	LATC0
0x1B ... 0x99	Reserved									
0x9A	CPCON	7:0	CPON[1:0]						CPT	CPRDY
0x9B	ADRES	7:0	ADRES[7:0]							
		15:8	ADRES[15:8]							
0x9D	ADCON0	7:0	CHS[5:0]						GO	ON
0x9E	ADCON1	7:0	FM	CS[2:0]					PREF[1:0]	
0x9F	ADACT	7:0					ACT[3:0]			
0xA0 ... 0x010B	Reserved									
0x010C	RB4I2C	7:0	SLEW[1:0]		PU[1:0]				TH[1:0]	
0x010D	RB6I2C	7:0	SLEW[1:0]		PU[1:0]				TH[1:0]	
0x010E	RC0I2C	7:0	SLEW[1:0]		PU[1:0]				TH[1:0]	
0x010F	RC1I2C	7:0	SLEW[1:0]		PU[1:0]				TH[1:0]	
0x0110 ... 0x0118	Reserved									
0x0119	RC1REG	7:0	RCREG[7:0]							
0x011A	TX1REG	7:0	TXREG[7:0]							
0x011B	SP1BRG	7:0	SPBRG[7:0]							
		15:8	SPBRG[15:8]							
0x011D	RC1STA	7:0	SPEN	RX9	SREN	CREN	ADDEN	FERR	OERR	RX9D
0x011E	TX1STA	7:0	CSRC	TX9	TXEN	SYNC	SENDB	BRGH	TRMT	TX9D
0x011F	BAUD1CON	7:0	ABDOVF	RCIDL		SCKP	BRG16		WUE	ABDEN
0x0120 ... 0x018B	Reserved									

.....continued

Offset	Name	Bit Pos.	7	6	5	4	3	2	1	0
0x018C	SSP1BUF	7:0	BUF[7:0]							
0x018D	SSP1ADD	7:0	ADD[7:0]							
0x018E	SSP1MSK	7:0	MSK[6:0]							MSK0
0x018F	SSP1STAT	7:0	SMP	CKE	D/$\overline{A}$	P	S	R/$\overline{W}$	UA	BF
0x0190	SSP1CON1	7:0	WCOL	SSPOV	SSPEN	CKP	SSPM[3:0]			
0x0191	SSP1CON2	7:0	GCEN	ACKSTAT	ACKDT	ACKEN	RCEN	PEN	RSEN	SEN
0x0192	SSP1CON3	7:0	ACKTIM	PCIE	SCIE	BOEN	SDAHT	SBCDE	AHEN	DHEN
0x0193 ... 0x020B	Reserved									
0x020C	TMR1	7:0	TMR1[7:0]							
		15:8	TMR1[15:8]							
0x020E	T1CON	7:0			CKPS[1:0]			$\overline{SYNC}$	RD16	ON
0x020F	T1GCON	7:0	GE	GPOL	GTM	GSPM	GGO/$\overline{DONE}$	GVAL		
0x0210	T1GATE	7:0				GSS[4:0]				
0x0211	T1CLK	7:0				CS[4:0]				
0x0212 ... 0x028B	Reserved									
0x028C	T2TMR	7:0	T2TMR[7:0]							
0x028D	T2PR	7:0	T2PR[7:0]							
0x028E	T2CON	7:0	ON	CKPS[2:0]			OUTPS[3:0]			
0x028F	T2HLT	7:0	PSYNC	CPOL	CSYNC	MODE[4:0]				
0x0290	T2CLKCON	7:0						CS[2:0]		
0x0291	T2RST	7:0					RSEL[3:0]			
0x0292 ... 0x030B	Reserved									
0x030C	CCPR1	7:0	CCPR[7:0]							
		15:8	CCPR[15:8]							
0x030E	CCP1CON	7:0	EN		OUT	FMT	MODE[3:0]			
0x030F	CCP1CAP	7:0							CTS[1:0]	
0x0310	CCPR2	7:0	CCPR[7:0]							
		15:8	CCPR[15:8]							
0x0312	CCP2CON	7:0	EN		OUT	FMT	MODE[3:0]			
0x0313	CCP2CAP	7:0							CTS[1:0]	
0x0314	PWM3DC	7:0	DCL[1:0]							
		15:8	DCH[7:0]							
0x0316	PWM3CON	7:0	EN		OUT	POL				
0x0317	Reserved									
0x0318	PWM4DC	7:0	DCL[1:0]							
		15:8	DCH[7:0]							
0x031A	PWM4CON	7:0	EN		OUT	POL				
0x031B ... 0x059B	Reserved									
0x059C	TMR0L	7:0	TMR0L[7:0]							
0x059D	TMR0H	7:0	TMR0H[7:0]							
0x059E	T0CON0	7:0	EN		OUT	MD16	OUTPS[3:0]			
0x059F	T0CON1	7:0	CS[2:0]			ASYNC	CKPS[3:0]			
0x05A0 ... 0x070B	Reserved									
0x070C	PIR0	7:0			TMR0IF	IOCIF				INTF
0x070D	PIR1	7:0	CCP1IF	TMR2IF	TMR1IF	RC1IF	TX1IF	BCL1IF	SSP1IF	ADIF
0x070E	PIR2	7:0	CCP2IF	NVMIF	TMR1GIF					
0x070F ... 0x0715	Reserved									

.....continued

Offset	Name	Bit Pos.	7	6	5	4	3	2	1	0
0x0716	PIE0	7:0			TMR0IE	IOCIE				INTE
0x0717	PIE1	7:0	CCP1IE	TMR2IE	TMR1IE	RC1IE	TX1IE	BCL1IE	SSP1IE	ADIE
0x0718	PIE2	7:0	CCP2IE	NVMIE	TMR1GIE					
0x0719 ... 0x080B	Reserved									
0x080C	WDTCON	7:0	CS		PS[4:0]					SEN
0x080D ... 0x0810	Reserved									
0x0811	BORCON	7:0	SBOREN							BORRDY
0x0812	Reserved									
0x0813	PCON0	7:0	STKOVF	STKUNF		$\overline{\text{RWDT}}$	$\overline{\text{RMCLR}}$	$\overline{\text{RI}}$	$\overline{\text{POR}}$	$\overline{\text{BOR}}$
0x0814	PCON1	7:0							$\overline{\text{MEMV}}$	
0x0815 ... 0x088D	Reserved									
0x088E	OSCCON	7:0			COSC[1:0]					
0x088F	Reserved									
0x0890	OSCSTAT	7:0		HFOR	MFOR	LFOR		ADOR	SFOR	
0x0891	OSCEN	7:0		HFOEN	MFOEN	LFOEN		ADOEN		
0x0892	OSCTUNE	7:0			TUN[5:0]					
0x0893	OSCFRQ	7:0						FRQ[2:0]		
0x0894 ... 0x090B	Reserved									
0x090C	FVRCON	7:0	FVREN	FVRRDY					ADFVR[1:0]	
0x090D ... 0x1C8B	Reserved									
0x1C8C	NVMADR	7:0	NVMADR[7:0]							
		15:8		NVMADR[14:8]						
0x1C8E	NVMDAT	7:0	NVMDAT[7:0]							
		15:8			NVMDAT[13:8]					
0x1C90	NVMCON1	7:0		NVMREGS	LWLO	FREE	WRERR	WREN	WR	RD
0x1C91	NVMCON2	7:0	NVMCON2[7:0]							
0x1C92 ... 0x1E8E	Reserved									
0x1E8F	PPSLOCK	7:0								PPSLOCKED
0x1E90	INTPPS	7:0			PORT[2:0]			PIN[2:0]		
0x1E91	T0CKIPPS	7:0			PORT[2:0]			PIN[2:0]		
0x1E92	T1CKIPPS	7:0			PORT[2:0]			PIN[2:0]		
0x1E93	T1GPPS	7:0			PORT[2:0]			PIN[2:0]		
0x1E94 ... 0x1E9B	Reserved									
0x1E9C	T2INPPS	7:0			PORT[2:0]			PIN[2:0]		
0x1E9D ... 0x1EA0	Reserved									
0x1EA1	CCP1PPS	7:0			PORT[2:0]			PIN[2:0]		
0x1EA2	CCP2PPS	7:0			PORT[2:0]			PIN[2:0]		
0x1EA3 ... 0x1EC2	Reserved									
0x1EC3	ADACTPPS	7:0			PORT[2:0]			PIN[2:0]		
0x1EC4	Reserved									
0x1EC5	SSP1CLKPPS	7:0			PORT[2:0]			PIN[2:0]		

.....continued

Offset	Name	Bit Pos.	7	6	5	4	3	2	1	0
0x1EC6	SSP1DATPPS	7:0			PORT[2:0]			PIN[2:0]		
0x1EC7	SSP1SSPPS	7:0			PORT[2:0]			PIN[2:0]		
0x1EC8 ... 0x1ECA	Reserved									
0x1ECB	RX1PPS	7:0			PORT[2:0]			PIN[2:0]		
0x1ECC	CK1PPS	7:0			PORT[2:0]			PIN[2:0]		
0x1ECD ... 0x1F0F	Reserved									
0x1F10	RA0PPS	7:0			RA0PPS[5:0]					
0x1F11	RA1PPS	7:0			RA1PPS[5:0]					
0x1F12	RA2PPS	7:0			RA2PPS[5:0]					
0x1F13	Reserved									
0x1F14	RA4PPS	7:0			RA4PPS[5:0]					
0x1F15	RA5PPS	7:0			RA5PPS[5:0]					
0x1F16 ... 0x1F1B	Reserved									
0x1F1C	RB4PPS	7:0			RB4PPS[5:0]					
0x1F1D	RB5PPS	7:0			RB5PPS[5:0]					
0x1F1E	RB6PPS	7:0			RB6PPS[5:0]					
0x1F1F	RB7PPS	7:0			RB7PPS[5:0]					
0x1F20	RC0PPS	7:0			RC0PPS[5:0]					
0x1F21	RC1PPS	7:0			RC1PPS[5:0]					
0x1F22	RC2PPS	7:0			RC2PPS[5:0]					
0x1F23	RC3PPS	7:0			RC3PPS[5:0]					
0x1F24	RC4PPS	7:0			RC4PPS[5:0]					
0x1F25	RC5PPS	7:0			RC5PPS[5:0]					
0x1F26	RC6PPS	7:0			RC6PPS[5:0]					
0x1F27	RC7PPS	7:0			RC7PPS[5:0]					
0x1F28 ... 0x1F37	Reserved									
0x1F38	ANSELA	7:0			ANSELA5	ANSELA4	ANSELA3	ANSELA2	ANSELA1	ANSELA0
0x1F39	WPUA	7:0			WPUA5	WPUA4	WPUA3	WPUA2	WPUA1	WPUA0
0x1F3A	ODCONA	7:0			ODCA5	ODCA4		ODCA2	ODCA1	ODCA0
0x1F3B	SLRCONA	7:0			SLRA5	SLRA4		SLRA2	SLRA1	SLRA0
0x1F3C	INLVLA	7:0			INLVLA5	INLVLA4	INLVLA3	INLVLA2	INLVLA1	INLVLA0
0x1F3D	IOCAP	7:0			IOCAP5	IOCAP4	IOCAP3	IOCAP2	IOCAP1	IOCAP0
0x1F3E	IOCAN	7:0			IOCAN5	IOCAN4	IOCAN3	IOCAN2	IOCAN1	IOCAN0
0x1F3F	IOCAF	7:0			IOCAF5	IOCAF4	IOCAF3	IOCAF2	IOCAF1	IOCAF0
0x1F40 ... 0x1F42	Reserved									
0x1F43	ANSELB	7:0	ANSELB7	ANSELB6	ANSELB5	ANSELB4				
0x1F44	WPUB	7:0	WPUB7	WPUB6	WPUB5	WPUB4				
0x1F45	ODCONB	7:0	ODCB7	ODCB6	ODCB5	ODCB4				
0x1F46	SLRCONB	7:0	SLRB7	SLRB6	SLRB5	SLRB4				
0x1F47	INLVLB	7:0	INLVLB7	INLVLB6	INLVLB5	INLVLB4				
0x1F48	IOCBP	7:0	IOCBP7	IOCBP6	IOCBP5	IOCBP4				
0x1F49	IOCBN	7:0	IOCBN7	IOCBN6	IOCBN5	IOCBN4				
0x1F4A	IOCBF	7:0	IOCBF7	IOCBF6	IOCBF5	IOCBF4				
0x1F4B ... 0x1F4D	Reserved									
0x1F4E	ANSELC	7:0	ANSELC7	ANSELC6	ANSELC5	ANSELC4	ANSELC3	ANSELC2	ANSELC1	ANSELC0
0x1F4F	WPUC	7:0	WPUC7	WPUC6	WPUC5	WPUC4	WPUC3	WPUC2	WPUC1	WPUC0
0x1F50	ODCONC	7:0	ODCC7	ODCC6	ODCC5	ODCC4	ODCC3	ODCC2	ODCC1	ODCC0

.....continued

Offset	Name	Bit Pos.	7	6	5	4	3	2	1	0
0x1F51	SLRCONC	7:0	SLRC7	SLRC6	SLRC5	SLRC4	SLRC3	SLRC2	SLRC1	SLRC0
0x1F52	INLVLC	7:0	INLVLC7	INLVLC6	INLVLC5	INLVLC4	INLVLC3	INLVLC2	INLVLC1	INLVLC0
0x1F53	IOCCP	7:0	IOCCP7	IOCCP6	IOCCP5	IOCCP4	IOCCP3	IOCCP2	IOCCP1	IOCCP0
0x1F54	IOCCN	7:0	IOCCN7	IOCCN6	IOCCN5	IOCCN4	IOCCN3	IOCCN2	IOCCN1	IOCCN0
0x1F55	IOCCF	7:0	IOCCF7	IOCCF6	IOCCF5	IOCCF4	IOCCF3	IOCCF2	IOCCF1	IOCCF0
0x1F56 ... 0x8004	Reserved									
0x8005	REVISIONID	7:0	MJRREV[1:0]		MNRREV[5:0]					
		15:8			Reserved	Reserved	MJRREV[5:2]			
0x8006	DEVICEID	7:0	DEV[7:0]							
		15:8			Reserved	Reserved	DEV[11:8]			
0x8007	CONFIG1	7:0			RSTOSC[1:0]				FEXTOSC[1:0]	
		15:8				VDDAR				$\overline{\text{CLKOUTEN}}$
0x8008	CONFIG2	7:0	BOREN[1:0]			WDTE[1:0]		PWRTS[1:0]		MCLRE
		15:8			$\overline{\text{DEBUG}}$	STVREN	PPS1WAY		BORV	
0x8009	CONFIG3	7:0								
		15:8								
0x800A	CONFIG4	7:0	$\overline{\text{WRTAPP}}$			$\overline{\text{SAFEN}}$	$\overline{\text{BBEN}}$	BBSIZE[2:0]		
		15:8			LVP		$\overline{\text{WRTSAF}}$		$\overline{\text{WRTC}}$	$\overline{\text{WRTB}}$
0x800B	CONFIG5	7:0								$\overline{\text{CP}}$
		15:8								

32. Electrical Specifications

32.1 Absolute Maximum Ratings(†)

Parameter		Rating
Ambient temperature under bias		-40°C to +125°C
Storage temperature		-65°C to +150°C
Voltage on pins with respect to V_{SS}		
• **on V_{DD} pin:**		-0.3V to +6.5V
• **on $\overline{MCLR}$ pin:**		-0.3V to +9.0V
• **on all other pins:**		-0.3V to (V_{DD} + 0.3V)
Maximum current		
• **on V_{SS} pin(1)**	-40°C ≤ T_A ≤ +85°C	300 mA
	85°C < T_A ≤ +125°C	120 mA
• **on V_{DD} pin(1)**	-40°C ≤ T_A ≤ +85°C	250 mA
	85°C < T_A ≤ +125°C	85 mA
• **on any standard I/O pin**		±25 mA
Clamp current, I_K (V_{PIN} < 0 or V_{PIN} > V_{DD})		±20 mA
Total power dissipation(2)		800 mW

Notes:

1. Maximum current rating requires even load distribution across I/O pins. Maximum current rating may be limited by the device package power dissipation characterizations, see 32.3.6. Thermal Characteristics to calculate device specifications.
2. Power dissipation is calculated as follows:
   $P_{DIS} = V_{DD} \times \{I_{DD} - \Sigma I_{OH}\} + \Sigma \{(V_{DD} - V_{OH}) \times I_{OH}\} + \Sigma (V_{OI} \times I_{OL})$
3. Internal Power Dissipation is calculated as follows:
   $P_{INTERNAL} = I_{DD} \times V_{DD}$

   where I_{DD} is current to run the chip alone without driving any load on the output pins.
4. I/O Power Dissipation is calculated as follows:
   $P_{I/O} = \Sigma(I_{OL}*V_{OL})+\Sigma(I_{OH}*(V_{DD}-V_{OH}))$
5. Derated Power is calculated as follows:
   $P_{DER} = PD_{MAX}(T_J-T_A)/\theta_{JA}$

   where T_A = Ambient Temperature, T_J = Junction Temperature.

CAUTION **Notice:** Stresses above those listed under the *Absolute Maximum Ratings* section may cause permanent damage to the device. This is a stress rating only and functional operation of the device at those or any other conditions above those indicated in the operation listings of this specification is not implied. Exposure above maximum rating conditions for extended periods may affect device reliability.

32.2 Standard Operating Conditions

The standard operating conditions for any device are defined as:

Parameter	Condition
Operating Voltage:	$V_{DDMIN} \le V_{DD} \le V_{DDMAX}$
Operating Temperature:	$T_{AMIN} \le T_A \le T_{AMAX}$

Parameter		Ratings
V_{DD} — Operating Supply Voltage(1)		
	V_{DDMIN} ($F_{OSC} \le$ 16 MHz)	+1.8V
	V_{DDMIN} ($F_{OSC} \le$ 32 MHz)	+2.5V
	V_{DDMAX}	+5.5V
T_A — Operating Ambient Temperature Range		
Industrial Temperature	T_{A_MIN}	-40°C
	T_{A_MAX}	+85°C
Extended Temperature	T_{A_MIN}	-40°C
	T_{A_MAX}	+125°C

Note:
1. See Parameter **D002**, DC Characteristics: Supply Voltage.

Figure 32-1. Voltage Frequency Graph, -40°C ≤ T_A ≤ +125°C

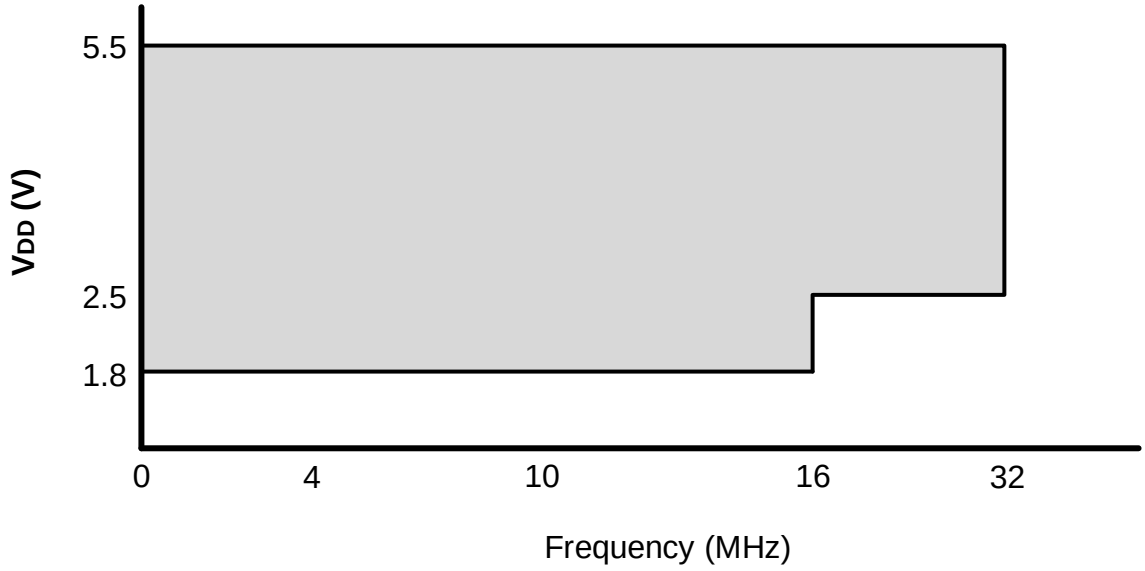

Notes:
1. The shaded region indicates the permissible combinations of voltage and frequency.
2. Refer to "**External Clock/Oscillator Timing Requirements**" section for each Oscillator mode's supported frequencies.

32.3 DC Characteristics

32.3.1 Supply Voltage

Table 32-1.

Standard Operating Conditions (unless otherwise stated)							
Param. No.	**Sym.**	**Characteristic**	**Min.**	**Typ.†**	**Max.**	**Units**	**Conditions**
Supply Voltage							
D002	V_{DD}		1.8	—	5.5	V	$F_{OSC} \leq 16$ MHz
			2.5	—	5.5	V	$F_{OSC} > 16$ MHz
RAM Data Retention(1)							
D003	V_{DR}		1.7	—	—	V	Device in Sleep mode
Power-on Reset Release Voltage(2)							
D004	V_{POR}		—	1.6	—	V	BOR disabled(3)
Power-on Reset Rearm Voltage(2)							
D005	V_{PORR}		—	1.1	—	V	BOR disabled(3)
V_{DD} Rise Rate to ensure internal Power-on Reset signal(2)							
D006	S_{VDD}		0.05	—	—	V/ms	BOR disabled(3)

† - Data in “Typ.” column is at 3.0V, 25°C unless otherwise stated. These parameters are for design guidance only and are not tested.

Notes:

1. This is the limit to which V_{DD} can be lowered in Sleep mode without losing RAM data.
2. See the following figure: **POR and POR REARM with Slow Rising V_{DD}**.
3. See “**Reset, WDT, Power-up Timer, and Brown-Out Reset Specifications**” for BOR trip point information.

Figure 32-2. POR and POR Rearm with Slow Rising V_{DD}

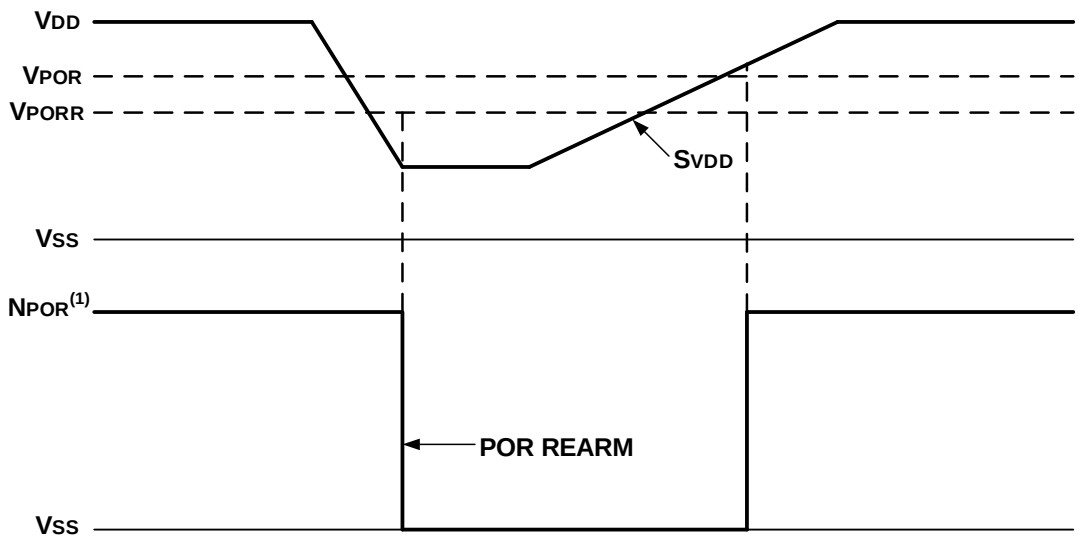

Note:

1. When N_{POR} is low, the device is held in Reset.

32.3.2 Supply Current (I_{DD})(1,2)

Table 32-2.

Standard Operating Conditions (unless otherwise stated)								
Param. No.	Sym.	Device Characteristics	Min.	Typ.†	Max.	Units	Conditions	
							V_{DD}	Note
D101	$I_{DD_{HFO16}}$	HFINTOSC = 16 MHz	—	1.5	2.1	mA	3.0V	
D102	$I_{DD_{HFOPLL}}$	HFINTOSC = 32 MHz	—	2.7	3.6	mA	3.0V	

† - Data in “Typ.” column is at 3.0V, 25°C unless otherwise stated. These parameters are for design guidance only and are not tested.

Notes:

1. The test conditions for all I_{DD} measurements in active operation mode are: all I/O pins are outputs driven low; $\overline{MCLR}$ = V_{DD}; WDT disabled.
2. The supply current is mainly a function of the operating voltage and frequency. Other factors, such as I/O pin loading and switching rate, oscillator type, internal code execution pattern and temperature, also have an impact on the current consumption.

32.3.3 Power-Down Current (I_{PD})(1,2,3)

Table 32-3.

Standard Operating Conditions (unless otherwise stated)									
Param. No.	Sym.	Device Characteristics	Min.	Typ.†	Max. +85°C	Max. +125°C	Units	Conditions	
								V_{DD}	Note
D200	I_{PD}	I_{PD} Base	—	0.40	2.5	12	μA	3.0V	
D201	I_{PD_WDT}	Low-Frequency Internal Oscillator/WDT	—	0.5	3.6	6.1	μA	3.0V	
D203	I_{PD_FVR}	FVR	—	40	64	66	μA	3.0V	
D204	I_{PD_BOR}	Brown-out Reset (BOR)	—	25	35	40	μA	3.0V	
D207	I_{PD_ADCA}	ADC - Active	—	—	3	5.6	μA	3.0V	ADC is non-converting (4)

† - Data in “Typ.” column is at 3.0V, 25°C unless otherwise stated. These parameters are for design guidance only and are not tested.

Notes:

1. The peripheral current is the sum of the base I_{DD} and the additional current consumed when this peripheral is enabled. The peripheral Δ current can be determined by subtracting the base I_{DD} or I_{PD}current from this limit. Max. values should be used when calculating total current consumption.
2. The power-down current in Sleep mode does not depend on the oscillator type. Power-down current is measured with the part in Sleep mode with all I/O pins in high-impedance state and tied to V_{SS}.
3. All peripheral currents listed are on a per-peripheral basis if more than one instance of a peripheral is available.
4. ADC clock source is ADCRC.

32.3.4 I/O Ports

Table 32-4.

Standard Operating Conditions (unless otherwise stated)							
Param. No.	Sym.	Device Characteristics	Min.	Typ.†	Max.	Units	Conditions
Input Low Voltage							
	V_{IL}	I/O PORT:					
D300		• with TTL buffer	—	—	0.8	V	$4.5V \le V_{DD} \le 5.5V$
D301			—	—	0.15 V_{DD}	V	$1.8V \le V_{DD} \le 4.5V$
D302		• with Schmitt Trigger buffer	—	—	0.2 V_{DD}	V	$1.8V \le V_{DD} \le 5.5V$
D303		• with I^2C levels	—	—	0.3 V_{DD}	V	
D304		• with SMBus levels	—	—	0.8	V	$2.7V \le V_{DD} \le 5.5V$
D305		$\overline{MCLR}$	—	—	0.2 V_{DD}	V	
Input High Voltage							

.....continued							
Standard Operating Conditions (unless otherwise stated)							
Param. No.	**Sym.**	**Device Characteristics**	**Min.**	**Typ.†**	**Max.**	**Units**	**Conditions**
	V_{IH}	I/O PORT:					
D320		• with TTL buffer	2.0	—	—	V	$4.5V \le V_{DD} \le 5.5V$
D321			0.25 V_{DD}+0.8	—	—	V	$1.8V \le V_{DD} \le 4.5V$
D322		• with Schmitt Trigger buffer	0.8V_{DD}	—	—	V	$1.8V \le V_{DD} \le 5.5V$
D323		• with I^2C levels	0.7 V_{DD}	—	—	V	
D324		• with SMBus levels	2.1	—	—	V	$2.7V \le V_{DD} \le 5.5V$
D325		$\overline{MCLR}$	0.8 V_{DD}	—	—	V	
Input Leakage Current(1)							
D340	I_{IL}	I/O PORTS	—	±5	±125	nA	$V_{SS} \le V_{PIN} \le V_{DD}$, Pin at high-impedance, 85°C
D341			—	±5	±1000	nA	$V_{SS} \le V_{PIN} \le V_{DD}$, Pin at high-impedance, 125°C
D342		$\overline{MCLR}$(2)	—	±50	±200	nA	$V_{SS} \le V_{PIN} \le V_{DD}$, Pin at high-impedance, 85°C
Weak Pull-up Current							
D350	I_{PUR}		25	120	200	µA	V_{DD} = 3.0V, V_{PIN} = V_{SS}
Output Low Voltage							
D360	V_{OL}	Standard I/O PORTS	—	—	0.6	V	I_{OL} = 10 mA, V_{DD} = 3.0V
Output High Voltage							
D370	V_{OH}	Standard I/O PORTS	V_{DD}-0.7	—	—	V	I_{OH} = 6 mA, V_{DD} = 3.0V
All I/O Pins							
D380	C_{IO}		—	5	50	pF	

† - Data in “Typ” column is at 3.0V, 25°C unless otherwise stated. These parameters are for design guidance only and are not tested.

Notes:

1. Negative current is defined as current sourced by the pin.
2. The leakage current on the $\overline{MCLR}$ pin is strongly dependent on the applied voltage level. The specified levels represent normal operating conditions. Higher leakage current may be measured at different input voltages.

32.3.5 Memory Programming Specifications

Table 32-5.

Standard Operating Conditions (unless otherwise stated)							
Param No.	**Sym.**	**Device Characteristics**	**Min.**	**Typ†**	**Max.**	**Units**	**Conditions**
High Voltage Entry Programming Mode Specifications							
MEM01	V_{IHH}	Voltage on $\overline{MCLR}$/V_{PP} pin to enter programming mode	7.9	—	9	V	**(Note 2)**
MEM02	I_{PPGM}	Current on $\overline{MCLR}$/V_{PP} pin during programming mode	—	—	0.6	mA	**(Note 2)**

.....continued

Standard Operating Conditions (unless otherwise stated)							
Param No.	**Sym.**	**Device Characteristics**	**Min.**	**Typ†**	**Max.**	**Units**	**Conditions**
Programming Mode Specifications							
MEM10	V_{BE}	V_{DD} for Bulk Erase	—	2.9	—	V	**(Note 3)**
MEM11	I_{DDPGM}	Supply Current during Programming operation	—	—	10	mA	
Program Flash Memory Specifications							
MEM30	E_P	Flash Memory Cell Endurance	10k	—	—	E/W	-40°C ≤ T_A ≤ +85°C **(Note 1)**
MEM32	T_{P_RET}	Characteristic Retention	—	40	—	Year	Provided no other specifications are violated
MEM33	V_{P_RD}	V_{DD} for Read operation	V_{DDMIN}	—	V_{DDMAX}	V	
MEM34	V_{P_REW}	V_{DD} for Row Erase or Write operation	V_{DDMIN}	—	V_{DDMAX}	V	
MEM35	T_{P_REW}	Self-Timed Row Erase or Self-Timed Write	—	—	2.8	ms	

† - Data in “Typ” column is at 3.0V, 25°C unless otherwise stated. These parameters are for design guidance only and are not tested.

Notes:

1. Flash Memory Cell Endurance for the Flash memory is defined as: One Row Erase operation and one Self-Timed Write.
2. Required only if the LVP bit of the Configuration Words is disabled.
3. Refer to the Family Programming Specification for more information.

32.3.6 Thermal Characteristics

Table 32-6.

Standard Operating Conditions (unless otherwise stated) Operating temperature -40°C ≤ T_A ≤ +125°C					
Param No.	**Sym.**	**Characteristic**	**Typ.**	**Units**	**Conditions**
TH01	θ_{JA}	Thermal Resistance Junction to Ambient	70	°C/W	8-pin PDIP package
			95.3	°C/W	8-pin SOIC package
			52.26	°C/W	8-pin DFN package
			100.0	°C/W	14-pin PDIP package
			77.7	°C/W	14-pin SOIC package
			100.0	°C/W	14-pin TSSOP package
			30.9	°C/W	16-pin QFN package
			62.2	°C/W	20-pin PDIP package
			77.7	°C/W	20-pin SOIC package
			31.1	°C/W	20-pin SSOP package
			43.0	°C/W	20-pin VQFN package
TH03	T_{JMAX}	Maximum Junction Temperature	150	°C	
TH04	PD	Power Dissipation	—	W	$PD = P_{INTERNAL}+P_{I/O}$
TH05	$P_{INTERNAL}$	Internal Power Dissipation	—	W	$P_{INTERNAL} = I_{DD} \times V_{DD}$ (1)
TH06	$P_{I/O}$	I/O Power Dissipation	—	W	$P_{I/O} = \Sigma(I_{OL}*V_{OL})+\Sigma(I_{OH}*(V_{DD}-V_{OH}))$
TH07	P_{DER}	Derated Power	—	W	$P_{DER} = PD_{MAX}\ (T_J-T_A)/\theta_{JA}$ (2)

Notes:
1. I_{DD} is current to run the chip alone without driving any load on the output pins.
2. T_A = Ambient Temperature, T_J = Junction Temperature.

32.4 AC Characteristics

Figure 32-3. Load Conditions

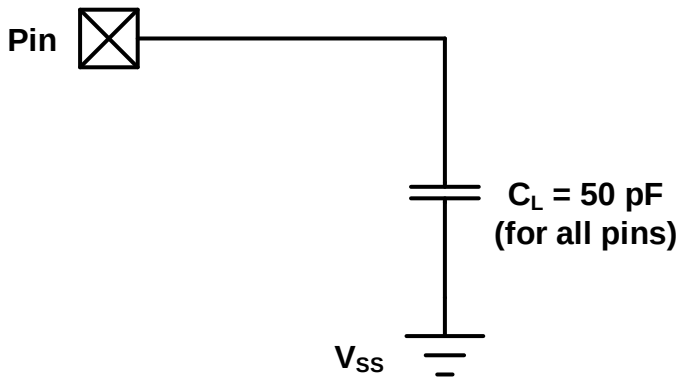

32.4.1 External Clock/Oscillator Timing Requirements

Figure 32-4. Clock Timing

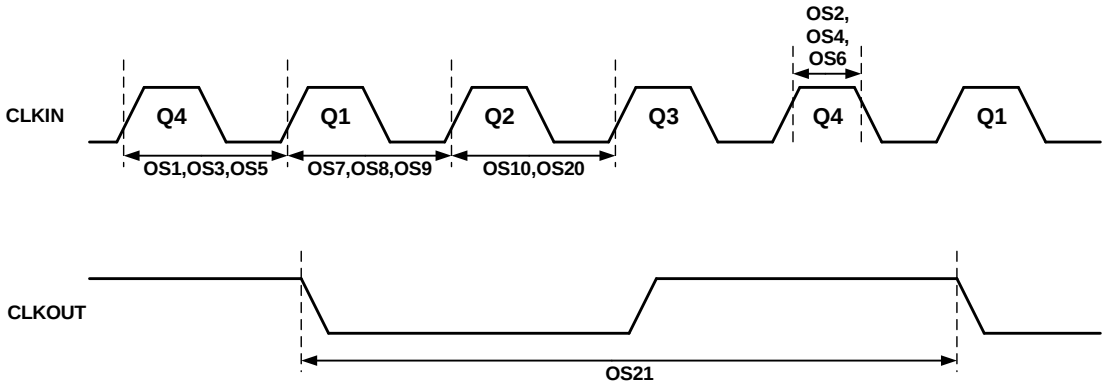

Table 32-7.

Standard Operating Conditions (unless otherwise stated)							
Param No.	**Sym.**	**Characteristic**	**Min.**	**Typ. †**	**Max.**	**Units**	**Conditions**
ECL Oscillator							
OS1	F_{ECL}	Clock Frequency	—	—	16	MHz	
OS2	T_{ECL_DC}	Clock Duty Cycle	40	—	60	%	
ECH Oscillator							
OS5	F_{ECH}	Clock Frequency	—	—	32	MHz	
OS6	T_{ECH_DC}	Clock Duty Cycle	40	—	60	%	

.....continued

Standard Operating Conditions (unless otherwise stated)							
Param No.	**Sym.**	**Characteristic**	**Min.**	**Typ. †**	**Max.**	**Units**	**Conditions**
System Oscillator							
OS20	F_{OSC}	System Clock Frequency	—	—	32	MHz	**Note 2, Note 3**
OS21	F_{CY}	Instruction Frequency	—	$F_{OSC}/4$	—	MHz	
OS22	T_{CY}	Instruction Period	125	$1/F_{CY}$	—	ns	**Note 1**

* These parameters are characterized but not tested.
† - Data in “Typ” column is at 3.0V, 25°C unless otherwise stated. These parameters are for design guidance only and are not tested.

Notes:

1. Instruction cycle period (T_{CY}) equals four times the input oscillator time base period. All specified values are based on characterization data for that particular oscillator type under standard operating conditions with the device executing code. Exceeding these specified limits may result in an unstable oscillator operation and/or higher than expected current consumption. All devices are tested to operate at “min” values with an external clock applied to CLKIN pin. When an external clock input is used, the “max” cycle time limit is “DC” (no clock) for all devices.
2. The system clock frequency (F_{OSC}) is selected by the “main clock switch controls” as described in the “**OSC - Oscillator Module**” chapter.
3. The system clock frequency (F_{OSC}) must meet the voltage requirements defined in the “**Standard Operating Conditions**” section.

32.4.2 Internal Oscillator Parameters(1)

Table 32-8.

Standard Operating Conditions (unless otherwise stated)							
Param No.	**Sym.**	**Characteristic**	**Min.**	**Typ. †**	**Max.**	**Units**	**Conditions**
OS50	F_{HFOSC}	Precision Calibrated HFINTOSC Frequency	—	4 8 16 32	—	MHz	**Note 2**
OS51	$F_{HFOSCLP}$	Low-Power Optimized HFINTOSC Frequency	0.92 1.84 0.88 1.76	1 2 1 2	1.08 2.16 1.12 2.24	MHz MHz MHz MHz	-40°C to 85°C -40°C to 85°C -40°C to 125 °C -40°C to 125°C
OS52	F_{MFOSC}	Internal Calibrated MFINTOSC Frequency	—	500	—	kHz	
OS53	F_{LFOSC}	Internal LFINTOSC Frequency	26.5	31	36	kHz	
OS54	$T_{HFOSCST}$	HFINTOSC Wake-up from Sleep Start-up Time	—	19	40	µs	

.....continued

Standard Operating Conditions (unless otherwise stated)							
Param No.	Sym.	Characteristic	Min.	Typ. †	Max.	Units	Conditions
OS56	$T_{LFOSCST}$	LFINTOSC Wake-up from Sleep Start-up Time	—	0.2	1	ms	

† - Data in “Typ” column is at 3.0V, 25°C unless otherwise stated. These parameters are for design guidance only and are not tested.

Notes:

1. To ensure these oscillator frequency tolerances, V_{DD} and V_{SS} must be capacitively decoupled as close to the device as possible. 0.1 µF and 0.01 µF values in parallel are recommended.
2. See **Figure 32-5**.

Figure 32-5. Precision Calibrated HFINTOSC Frequency Accuracy Over Device V_{DD} and Temperature

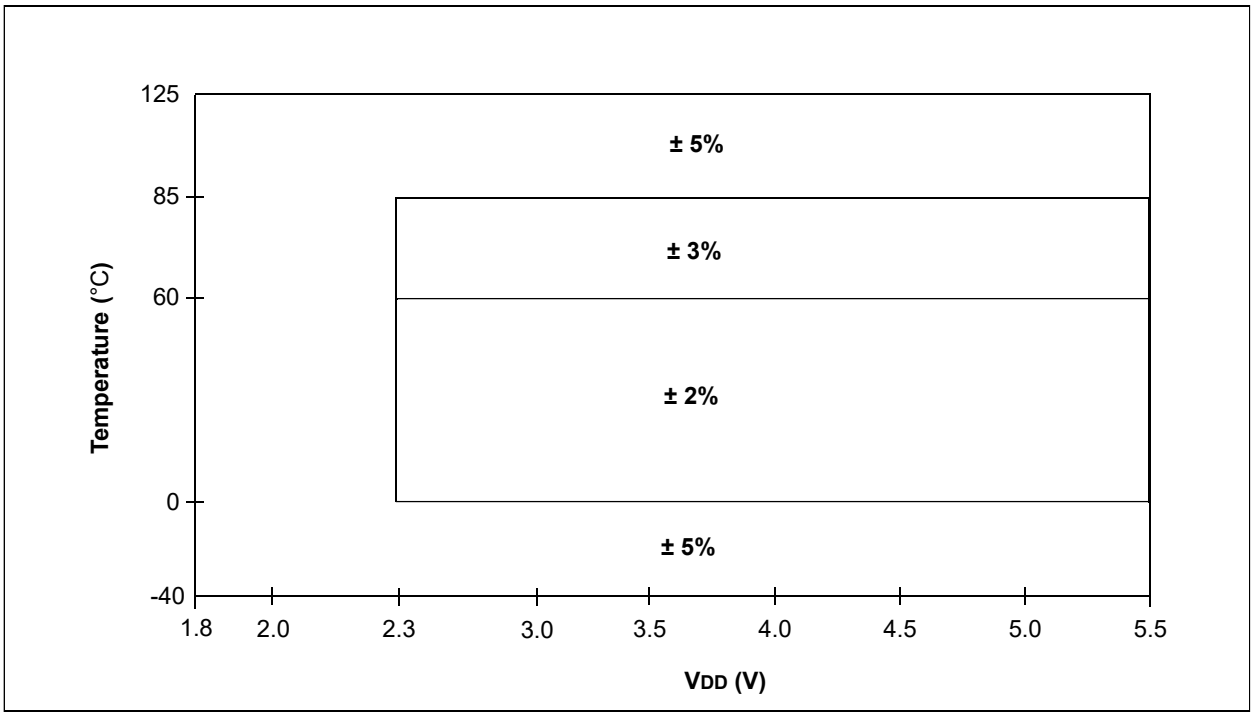

32.4.3 I/O and CLKOUT Timing Specifications

Figure 32-6. CLKOUT and I/O Timing

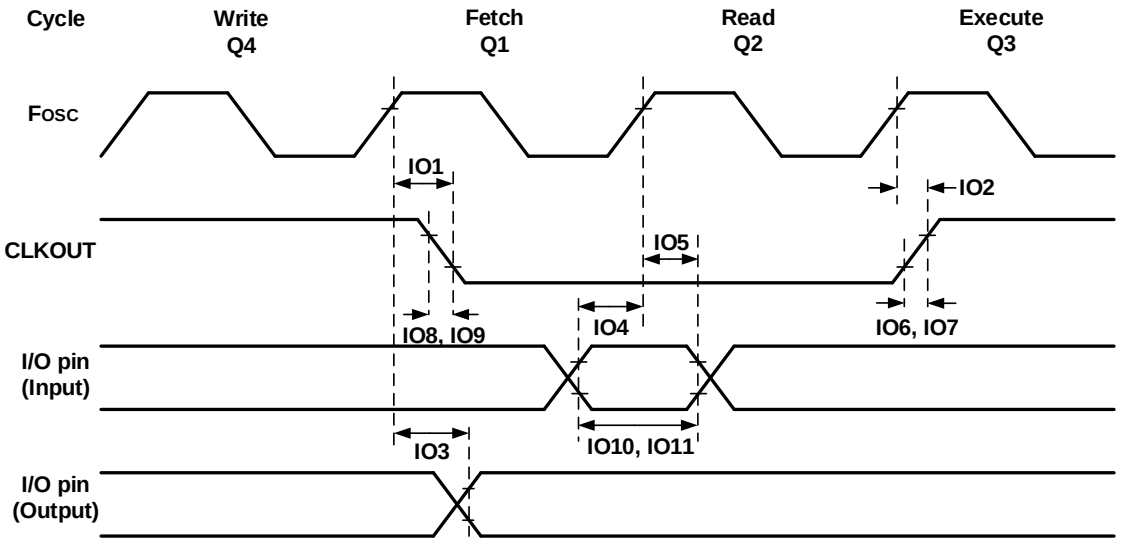

Table 32-9. I/O and CLKOUT Timing Specifications

Standard Operating Conditions (unless otherwise stated)							
Param No.	**Sym.**	**Characteristic**	**Min.**	**Typ. †**	**Max.**	**Units**	**Conditions**
IO1*	$T_{CLKOUTH}$	CLKOUT rising edge delay (rising edge F_{OSC} (Q1 cycle) to falling edge CLKOUT	—	—	70	ns	
IO2*	$T_{CLKOUTL}$	CLKOUT falling edge delay (rising edge F_{OSC} (Q3 cycle) to rising edge CLKOUT	—	—	72	ns	
IO3*	T_{IO_VALID}	Port output valid time (rising edge F_{OSC} (Q1 cycle) to port valid)	—	50	70	ns	
IO4*	T_{IO_SETUP}	Port input setup time (Setup time before rising edge F_{OSC} – Q2 cycle)	20	—	—	ns	
IO5*	T_{IO_HOLD}	Port input hold time (Hold time after rising edge F_{OSC} – Q2 cycle)	50	—	—	ns	
IO6*	T_{IOR_SLREN}	Port I/O rise time, slew rate enabled	—	25	—	ns	V_{DD} = 3.0V
IO7*	T_{IOR_SLRDIS}	Port I/O rise time, slew rate disabled	—	5	—	ns	V_{DD} = 3.0V
IO8*	T_{IOF_SLREN}	Port I/O fall time, slew rate enabled	—	25	—	ns	V_{DD} = 3.0V
IO9*	T_{IOF_SLRDIS}	Port I/O fall time, slew rate disabled	—	5	—	ns	V_{DD} = 3.0V
IO10*	T_{INT}	INT pin high or low time to trigger an interrupt	25	—	—	ns	
IO11*	T_{IOC}	Interrupt-on-Change minimum high or low time to trigger interrupt	25	—	—	ns	
* - These parameters are characterized but not tested.							

32.4.4 Reset, WDT, Power-up Timer, and Brown-Out Reset Specifications

Figure 32-7. Reset, Watchdog Timer, and Power-up Timer Timing

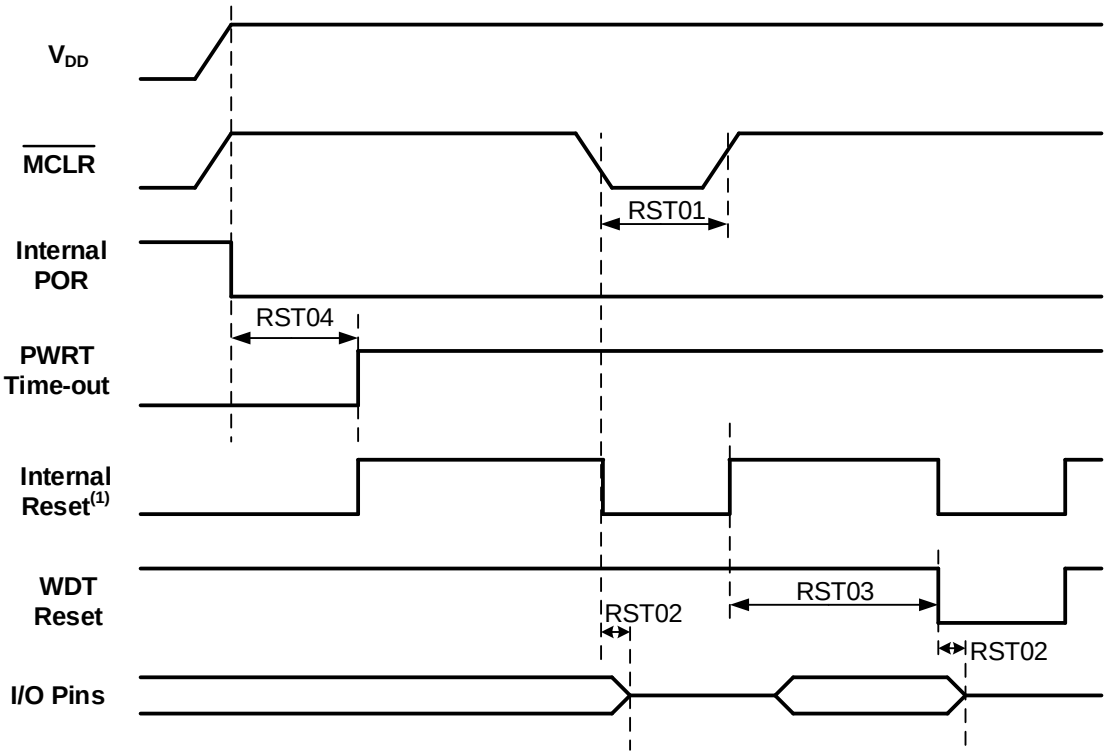

Note:

1. Asserted low.

Figure 32-8. Brown-out Reset Timing and Characteristics

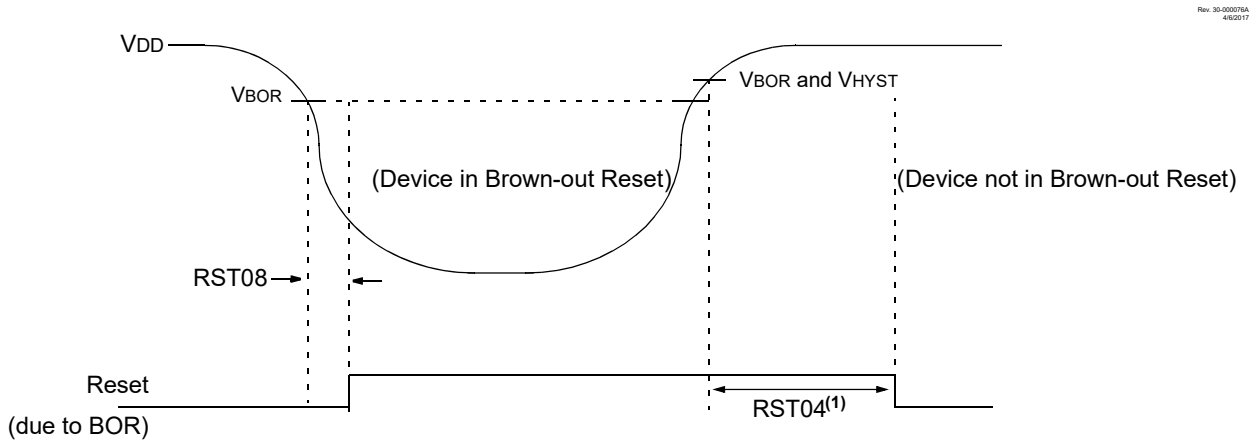

Note:

1. Only if $\overline{\text{PWRTE}}$ bit in the Configuration Word register is programmed to '1'; 2 ms delay if $\overline{\text{PWRTE}}$ = 0.

Table 32-10.

Standard Operating Conditions (unless otherwise stated)							
Param No.	**Sym.**	**Characteristic**	**Min.**	**Typ. †**	**Max.**	**Units**	**Conditions**
RST01*	T_{MCLR}	$\overline{MCLR}$ Pulse Width Low to ensure Reset	2	—	—	µs	
RST02*	T_{IOZ}	I/O high-impedance from Reset detection	—	—	2	µs	
RST03	T_{WDT}	Watchdog Timer Time-out Period	—	16	—	ms	1:512 Prescaler
RST04*	T_{PWRT}	Power-up Timer Period	—	65	—	ms	PWRTS = ‘10’ (64 ms)
RST06	V_{BOR}	Brown-out Reset Voltage	2.4 1.8	2.8 1.9	3.0 2.0(1)	V V	BORV = 0 BORV = 1
RST07	V_{BORHYS}	Brown-out Reset Hysteresis	—	40	—	mV	
RST08	T_{BORDC}	Brown-out Reset Response Time	—	3	—	µs	

* - These parameters are characterized but not tested.

† Data in “Typ” column is at 3.0V, 25°C unless otherwise stated. These parameters are for design guidance only and are not tested.

Note:

1. This value corresponds to V_{BORMAX}.

32.4.5 Analog-to-Digital Converter (ADC) Accuracy Specifications(1,2)

Table 32-11.

Standard Operating Conditions (unless otherwise stated) V_{DD} = 3.0V, T_A = 25°C							
Param No.	**Sym.**	**Characteristic**	**Min.**	**Typ. †**	**Max.**	**Units**	**Conditions**
AD01	N_R	Resolution	—	—	10	bit	
AD02	E_{IL}	Integral Error	—	0.5	±2	LSb	ADC_{REF}+ = 3.0V, ADC_{REF}- = V_{SS}
AD03	E_{DL}	Differential Error	—	0.3	±1	LSb	ADC_{REF}+ = 3.0V, ADC_{REF}- = V_{SS}
AD04	E_{OFF}	Offset Error	—	1	±2	LSb	ADC_{REF}+ = 3.0V, ADC_{REF}- = V_{SS}
AD05	E_{GN}	Gain Error	—	0.8	±2.5	LSb	ADC_{REF}+ = 3.0V, ADC_{REF}- = V_{SS}
AD06	V_{ADREF}	ADC Reference Voltage (AD_{REF}+)	1.8	—	V_{DD}	V	
AD07	V_{AIN}	Full-Scale Range	V_{SS}	—	AD_{REF}+	V	
AD08	Z_{AIN}	Recommended Impedance of Analog Voltage Source	—	10	—	kΩ	
AD09	R_{VREF}	ADC Voltage Reference Ladder Impedance	—	50	—	kΩ	

.....continued							
Standard Operating Conditions (unless otherwise stated) V_{DD} = 3.0V, T_A = 25°C							
Param No.	**Sym.**	**Characteristic**	**Min.**	**Typ. †**	**Max.**	**Units**	**Conditions**
* - These parameters are characterized but not tested. † Data in “Typ” column is at 3.0V, 25°C unless otherwise stated. These parameters are for design guidance only and are not tested. **Notes:** 1. Total Absolute Error is the sum of the offset, gain and integral non-linearity (INL) errors. 2. The ADC conversion result never decreases with an increase in the input and has no missing codes.							

32.4.6 Analog-to-Digital Converter (ADC) Conversion Timing Specifications

Table 32-12.

Standard Operating Conditions (unless otherwise stated)							
Param No.	**Sym.**	**Characteristic**	**Min.**	**Typ. †**	**Max.**	**Units**	**Conditions**
AD20	T_{AD}	ADC Clock Period	0.5	—	9	μs	F_{OSC} clock source
AD21			1	2	6	μs	ADCRC clock source
AD22	T_{CNV}	Conversion Time	—	11	—	T_{AD}	Set of GO bit to clear of GO bit
AD23	T_{ACQ}	Acquisition Time	—	2	—	μs	
AD24	T_{HCD}	Sample and Hold Capacitor Disconnect Time	—	—	—	—	F_{OSC} clock source
* - These parameters are characterized but not tested. † Data in “Typ” column is at 3.0V, 25°C unless otherwise stated. These parameters are for design guidance only and are not tested.							

Figure 32-9. ADC Conversion Timing (ADC Clock F_{OSC}-Based)

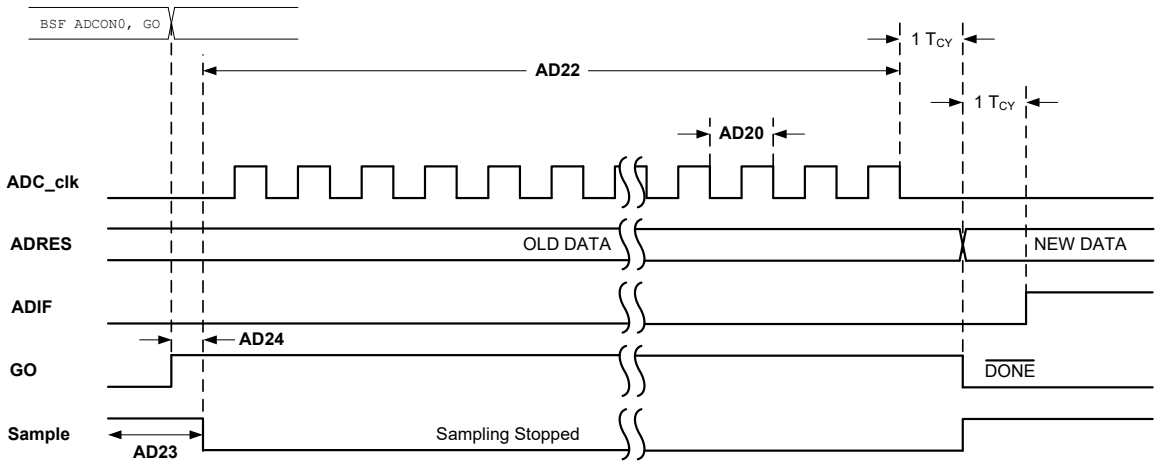

Figure 32-10. ADC Conversion Timing (ADC Clock from ADCRC)

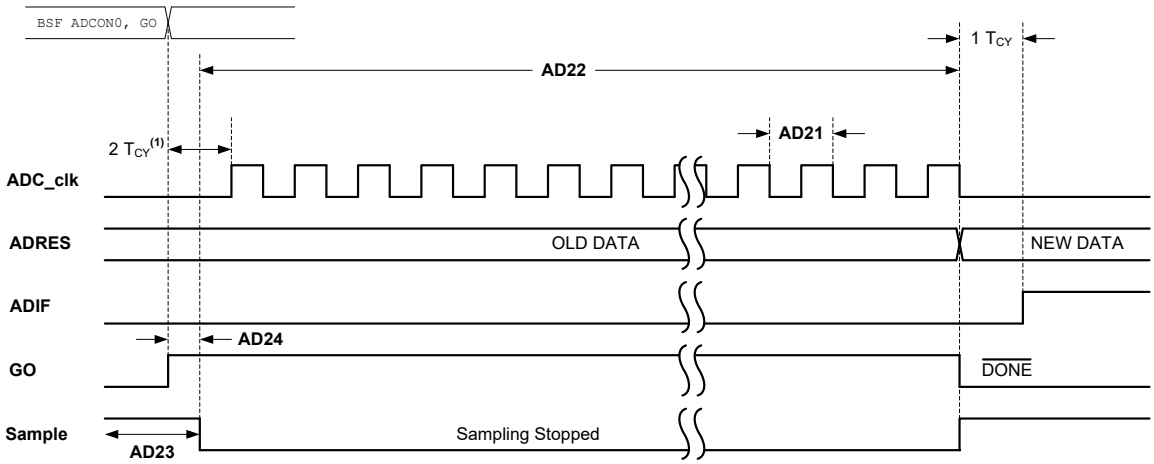

Note:

1. If the ADC clock source is selected as F_{RC}, a time of T_{CY} is added before the ADC clock starts. This allows the `SLEEP` instruction to be executed.

32.4.7 Fixed Voltage Reference (FVR) Specifications

Table 32-13.

Standard Operating Conditions (unless otherwise stated)							
Param No.	**Sym.**	**Characteristic**	**Min.**	**Typ. †**	**Max.**	**Units**	**Conditions**
FVR01	$V_{FVR}1$	1x Gain (1.024V)	-4	—	+4	%	V_{DD} ≥ 2.5V, -20°C to 125°C
			-6	—	+6	%	V_{DD} ≥ 2.5V, -20°C to -40°C
FVR02	$V_{FVR}2$	2x Gain (2.048V)	-4	—	+4	%	V_{DD} ≥ 2.5V, -20°C to 125°C
			-6	—	+6	%	V_{DD} ≥ 2.5V, -20°C to -40°C
FVR03	$V_{FVR}4$	4x Gain (4.096V)	-6	—	+6	%	V_{DD} ≥ 4.75V, -40°C to 125°C
FVR04	T_{FVRST}	FVR Start-up Time	—	60	—	µs	

32.4.8 Timer0 and Timer1 External Clock Requirements

Table 32-14.

Standard Operating Conditions (unless otherwise stated) Operating Temperature: -40°C ≤ T_A ≤ +125°C								
Param No.	**Sym.**	**Characteristic**		**Min.**	**Typ. †**	**Max.**	**Units**	**Conditions**
40*	T_T0H	T0CKI High Pulse Width	No Prescaler	$0.5T_{CY}$+20	—	—	ns	
			With Prescaler	10	—	—	ns	
41*	T_T0L	T0CKI Low Pulse Width	No Prescaler	$0.5T_{CY}$+20	—	—	ns	
			With Prescaler	10	—	—	ns	

.....continued

Standard Operating Conditions (unless otherwise stated) Operating Temperature: -40°C ≤ T_A ≤ +125°C								
Param No.	**Sym.**	**Characteristic**		**Min.**	**Typ. †**	**Max.**	**Units**	**Conditions**
42*	T_T0P	T0CKI Period		—	—	—	ns	N = Prescale value
45*	T_T1H	T1CKI High Time	Synchronous, No Prescaler	$0.5T_{CY}$+20	—	—	ns	
			Synchronous, with Prescaler	15	—	—	ns	
			Asynchronous	30	—	—	ns	
46*	T_T1L	T1CKI Low Time	Synchronous, No Prescaler	$0.5T_{CY}$+20	—	—	ns	
			Synchronous, with Prescaler	15	—	—	ns	
			Asynchronous	30	—	—	ns	
47*	T_T1P	T1CKI Input Period	Synchronous	—	—	—	ns	N = Prescale value
			Asynchronous	60	—	—	ns	
49*	$TCKEZ_{TMR}1$	Delay from External Clock Edge to Timer Increment		2 T_{OSC}	—	7 T_{OSC}	—	Timers in Sync mode

* - These parameters are characterized but not tested.

† Data in “Typ” column is at 3.0V, 25°C unless otherwise stated. These parameters are for design guidance only and are not tested.

Figure 32-11. Timer0 and Timing1 External Clock Timings

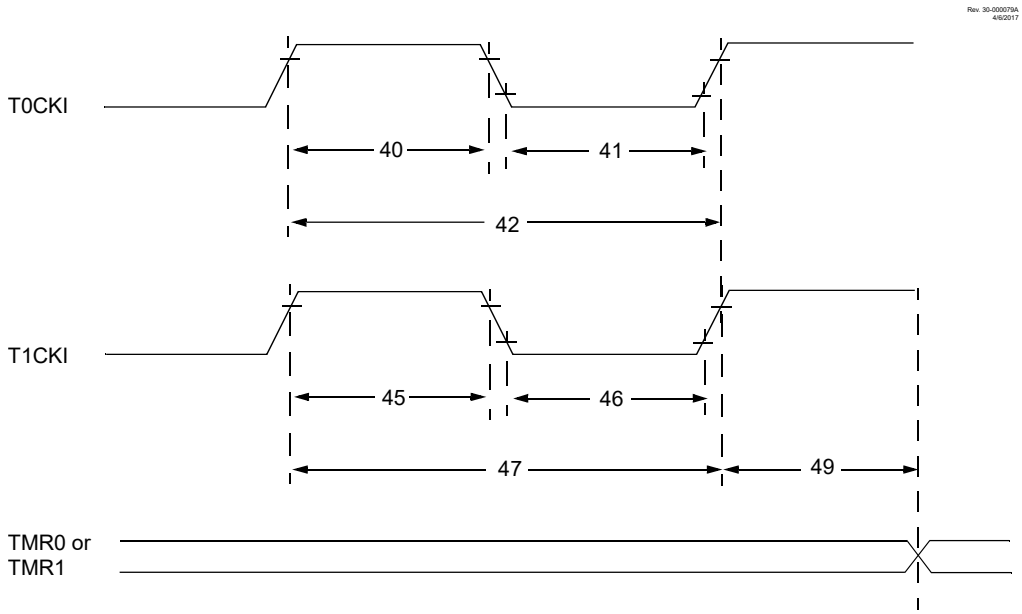

32.4.9 Capture/Compare/PWM Requirements (CCP)

Table 32-15.

Standard Operating Conditions (unless otherwise stated) Operating Temperature: -40°C ≤ T_A ≤ +125°C								
Param No.	**Sym.**	**Characteristic**		**Min.**	**Typ. †**	**Max.**	**Units**	**Conditions**
CC01*	$T_{CC}L$	CCPx Input Low Time	No Prescaler	$0.5T_{CY}+20$	—	—	ns	
			With Prescaler	20	—	—	ns	
CC02*	$T_{CC}H$	CCPx Input High Time	No Prescaler	$0.5T_{CY}+20$	—	—	ns	
			With Prescaler	20	—	—	ns	
CC03*	$T_{CC}P$	CCPx Input Period		$(3T_{CY}+40)/N$	—	—	ns	N = Prescale value

* - These parameters are characterized but not tested.

† Data in "Typ" column is at 3.0V, 25°C unless otherwise stated. These parameters are for design guidance only and are not tested.

Figure 32-12. Capture/Compare/PWM Timings (CCP)

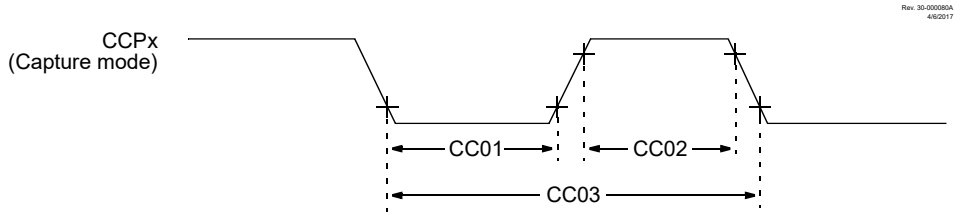

Note: Refer to Figure 32-3 for load conditions.

32.4.10 EUSART Synchronous Transmission Requirements

Table 32-16.

Standard Operating Conditions (unless otherwise stated)						
Param No.	**Sym.**	**Characteristic**	**Min.**	**Max.**	**Units**	**Conditions**
US120	$T_{CK}H2_{DT}V$	SYNC XMIT (Host and Client)	—	80	ns	$3.0V \le V_{DD} \le 5.5V$
		Clock high to data-out valid	—	100	ns	$1.8V \le V_{DD} \le 5.5V$
US121	T_{CKRF}	Clock out rise time and fall time	—	45	ns	$3.0V \le V_{DD} \le 5.5V$
		(Host mode)	—	50	ns	$1.8V \le V_{DD} \le 5.5V$
US122	T_{DTRF}	Data-out rise time and fall time	—	45	ns	$3.0V \le V_{DD} \le 5.5V$
			—	50	ns	$1.8V \le V_{DD} \le 5.5V$

Figure 32-13. EUSART Synchronous Transmission (Host/Client) Timing

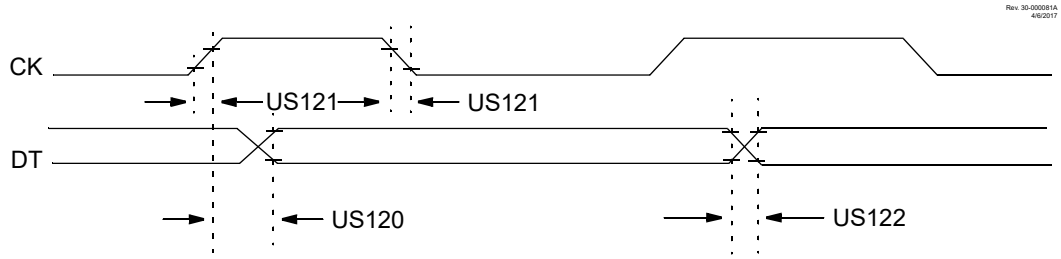

Note: Refer to Figure 32-3 for load conditions.

32.4.11 EUSART Synchronous Receive Requirements

Table 32-17.

Standard Operating Conditions (unless otherwise stated)						
Param No.	**Sym.**	**Characteristic**	**Min.**	**Max.**	**Units**	**Conditions**
US125	$T_{DT}V2_{CKL}$	SYNC RCV (Host and Client) Data-setup before CK ↓ (DT hold time)	10	—	ns	
US126	$T_{CK}L2_{DTL}$	Data-hold after CK ↓ (DT hold time)	15	—	ns	

Figure 32-14. EUSART Synchronous Receive (Host/Client) Timing

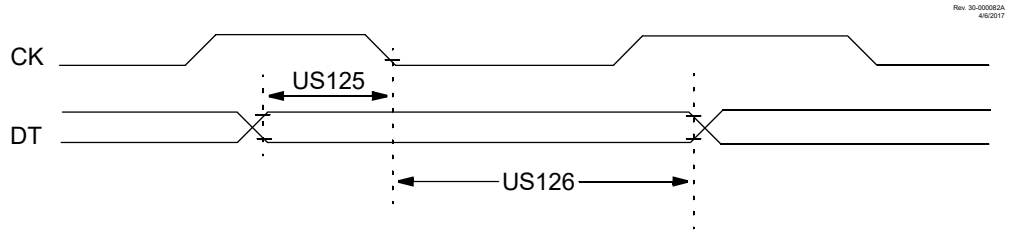

Note: Refer to Figure 32-3 for load conditions.

32.4.12 SPI Mode Requirements

Table 32-18.

Standard Operating Conditions (unless otherwise stated)							
Param No.	**Sym.**	**Characteristic**	**Min.**	**Typ. †**	**Max.**	**Units**	**Conditions**
SP70*	$T_{SS}L2_{SC}H$, $T_{SS}L2_{SC}L$	$\overline{SS}$↓ to SCK↓ or SCK↑ input	2.25*T_{CY}	—	—	ns	
SP71*	$T_{SC}H$	SCK input high time (Client mode)	T_{CY} + 20	—	—	ns	
SP72*	$T_{SC}L$	SCK input low time (Client mode)	T_{CY} + 20	—	—	ns	
SP73*	$T_{DI}V2_{SC}H$, $T_{DI}V2_{SC}L$	Setup time of SDI data input to SCK edge	100	—	—	ns	
SP74*	$T_{SC}H2_{DI}L$, $T_{SC}L2_{DI}L$	Hold time of SDI data input to SCK edge	100	—	—	ns	

.....continued

Standard Operating Conditions (unless otherwise stated)							
Param No.	**Sym.**	**Characteristic**	**Min.**	**Typ. †**	**Max.**	**Units**	**Conditions**
SP75*	$T_{DO}R$	SDO data output rise time	—	25	50	ns	1.8V ≤ V_{DD} ≤ 5.5V
SP76*	$T_{DO}F$	SDO data output fall time	—	10	25	ns	
SP77*	$T_{SS}H2_{DO}Z$	$\overline{SS}$↑ to SDO output high-impedance	10	—	50	ns	
SP78*	$T_{SC}R$	SCK output rise time (Host mode)	—	25	50	ns	1.8V ≤ V_{DD} ≤ 5.5V
SP79*	$T_{SC}F$	SCK output fall time (Host mode)	—	10	25	ns	
SP80*	$T_{SC}H2_{DO}V$, $T_{SC}L2_{DO}V$	SDO data output valid after SCK edge	—	—	145	ns	1.8V ≤ V_{DD} ≤ 5.5V
SP81*	$T_{DO}V2_{SC}H$, $T_{DO}V2_{SC}L$	SDO data output setup to SCK edge	1 T_{CY}	—	—	ns	
SP82*	$T_{SS}L2_{DO}V$	SDO data output valid after $\overline{SS}$↓ edge	—	—	50	ns	
SP83*	$T_{SC}H2_{SS}H$, $T_{SC}L2_{SS}H$	$\overline{SS}$ ↑□after SCK edge	1.5 T_{CY} + 40	—	—	ns	

* - These parameters are characterized but not tested.

† Data in “Typ” column is at 3.0V, 25°C unless otherwise stated. These parameters are for design guidance only and are not tested.

Figure 32-15. SPI Host Mode Timing (CKE = 0, SMP = 0)

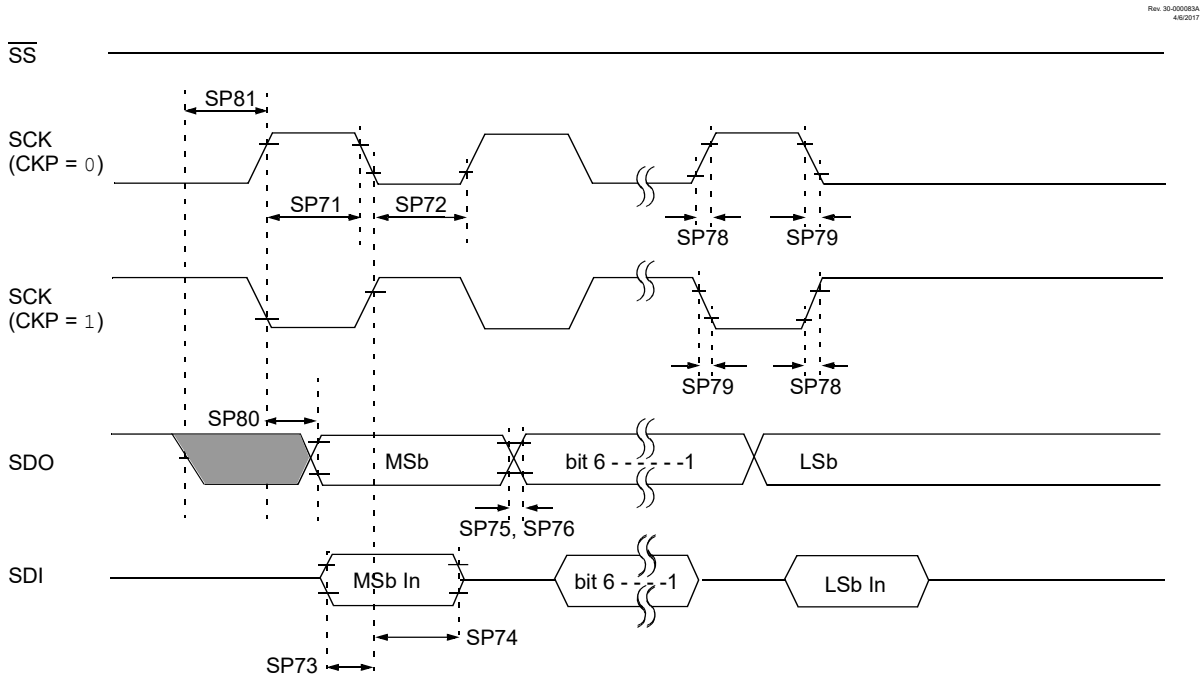

Note: Refer to Figure 32-3 for load conditions.

Figure 32-16. SPI Host Mode Timing (CKE = 1, SMP = 1)

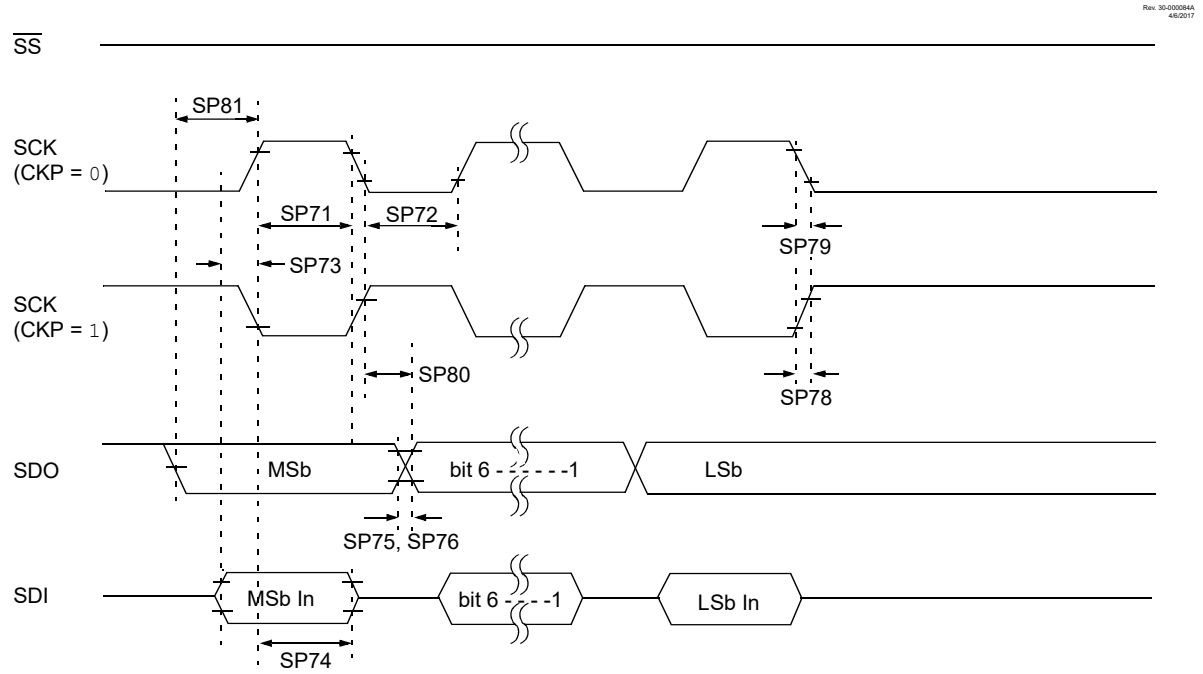

Note: Refer to Figure 32-3 for load conditions.

Figure 32-17. SPI Client Mode Timing (CKE = 0)

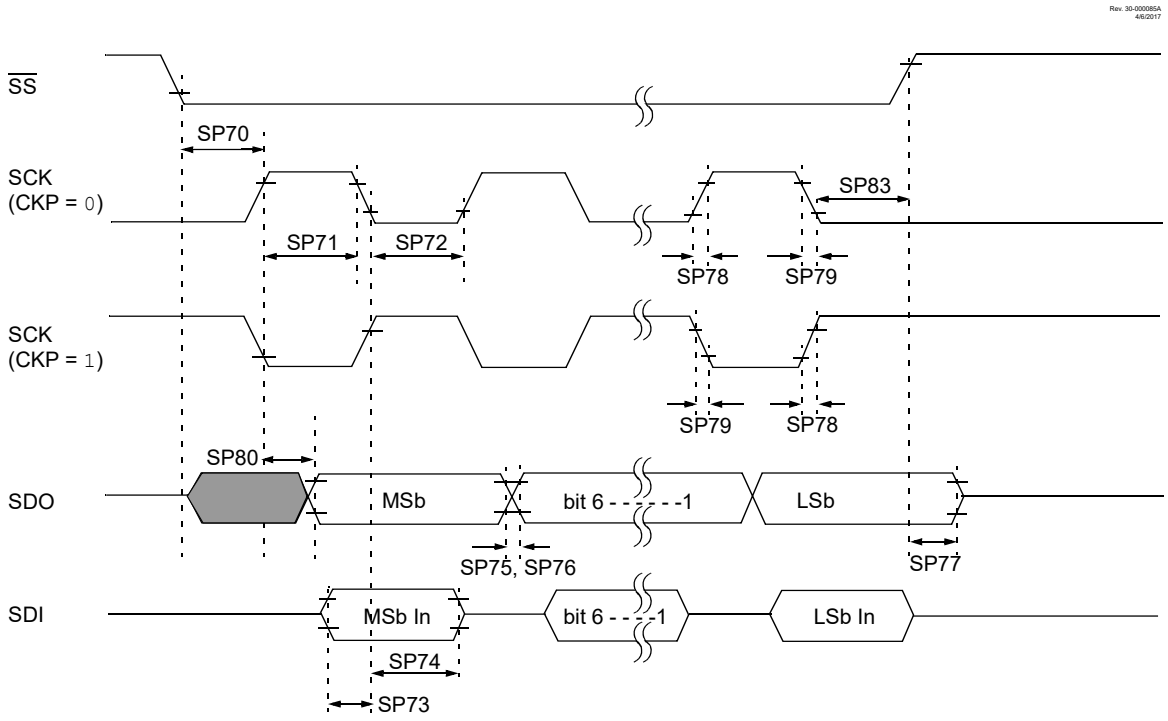

Note: Refer to Figure 32-3 for load conditions.

Figure 32-18. SPI Client Mode Timing (CKE = 1)

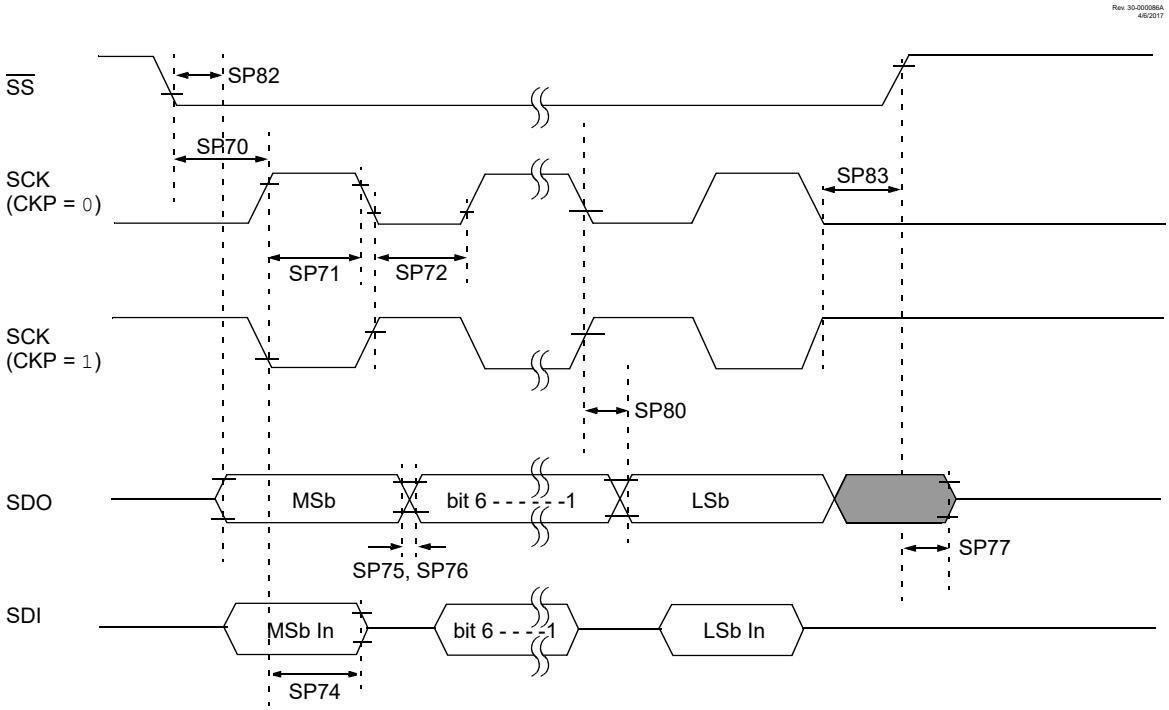

Note: Refer to Figure 32-3 for load conditions.

32.4.13 I²C Bus Start/Stop Bits Requirements

Table 32-19.

Standard Operating Conditions (unless otherwise stated)								
Param. No.	**Sym.**	**Characteristic**		**Min.**	**Typ. †**	**Max.**	**Units**	**Conditions**
SP90*	$T_{SU:STA}$	Start condition Setup time	100 kHz mode	4700	—	—	ns	Only relevant for Repeated Start condition
			400 kHz mode	600	—	—		
SP91*	$T_{HD:STA}$	Start condition Hold time	100 kHz mode	4000	—	—	ns	After this period, the first clock pulse is generated
			400 kHz mode	600	—	—		
SP92*	$T_{SU:STO}$	Stop condition Setup time	100 kHz mode	4700	—	—	ns	
			400 kHz mode	600	—	—		
SP93*	$T_{HD:STO}$	Stop condition Hold time	100 kHz mode	4000	—	—	ns	
			400 kHz mode	600	—	—		
* - These parameters are characterized but not tested.								

Figure 32-19. I²C Bus Start/Stop Bits Timing

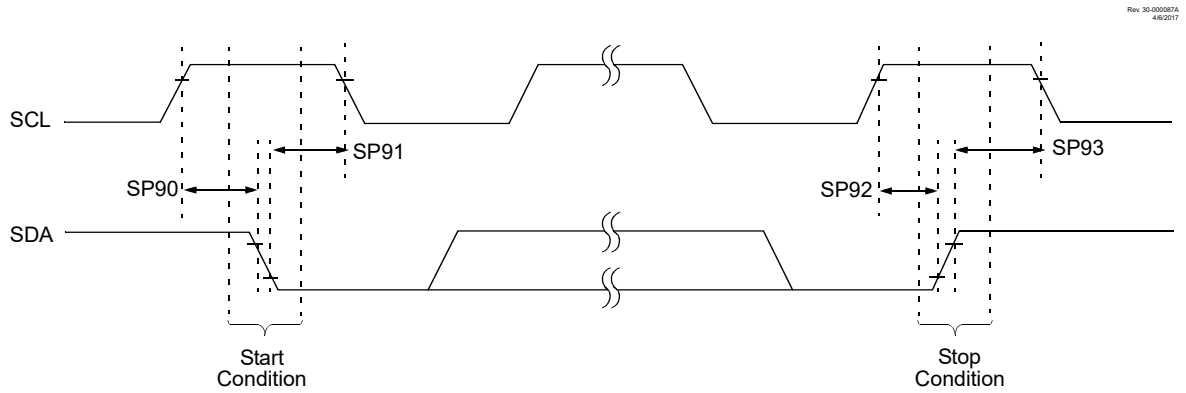

Note: Refer to Figure 32-3 for load conditions.

32.4.14 I²C Bus Data Requirements

Table 32-20.

Standard Operating Conditions (unless otherwise stated)							
Param. No.	**Sym.**	**Characteristic**		**Min.**	**Max.**	**Units**	**Conditions**
SP100*	T_{HIGH}	Clock high time	100 kHz mode	4.0	—	μs	Device must operate at a minimum of 1.5 MHz
			400 kHz mode	0.6	—	μs	Device must operate at a minimum of 10 MHz
			SSP module	$1.5T_{CY}$	—		

.....continued

Standard Operating Conditions (unless otherwise stated)							
Param. No.	**Sym.**	**Characteristic**		**Min.**	**Max.**	**Units**	**Conditions**
SP101*	T_{LOW}	Clock low time	100 kHz mode	4.7	—	μs	Device must operate at a minimum of 1.5 MHz
			400 kHz mode	1.3	—	μs	Device must operate at a minimum of 10 MHz
			SSP module	$1.5T_{CY}$	—		
SP102*	T_R	SDA and SCL rise time	100 kHz mode	—	1000	ns	
			400 kHz mode	$20 + 0.1C_B$	300	ns	C_B is specified to be from 10-400 pF
SP103*	T_F	SDA and SCL fall time	100 kHz mode	—	250	ns	
			400 kHz mode	$20 + 0.1C_B$	250	ns	C_B is specified to be from 10-400 pF
SP106*	$T_{HD:DAT}$	Data input hold time	100 kHz mode	0	—	ns	
			400 kHz mode	0	0.9	μs	
SP107*	$T_{SU:DAT}$	Data input setup time	100 kHz mode	250	—	ns	**Note 2**
			400 kHz mode	100	—	ns	
SP109*	T_{AA}	Output valid from clock	100 kHz mode	—	3500	ns	**Note 1**
			400 kHz mode	—	—	ns	
SP110*	T_{BUF}	Bus free time	100 kHz mode	4.7	—	μs	Time the bus must be free before a new transmission can start
			400 kHz mode	1.3	—	μs	
SP111	C_B	Bus capacitive loading		—	400	pF	

* - These parameters are characterized but not tested.

Notes:

1. As a transmitter, the device must provide this internal minimum delay time to bridge the undefined region (min. 300 ns) of the falling edge of SCL to avoid unintended generation of Start or Stop conditions.
2. A Fast mode (400 kHz) I^2C bus device can be used in a Standard mode (100 kHz) I^2C bus system, but the requirement $T_{SU:DAT} \geq 250$ ns must then be met. This will automatically be the case if the device does not stretch the low period of the SCL signal. If such a device does stretch the low period of the SCL signal, it must output the next data bit to the SDA line TR max. + $T_{SU:DAT}$ = 1000 + 250 = 1250 ns (according to the Standard mode I^2C bus specification), before the SCL line is released.

Figure 32-20. I²C Bus Data Timing

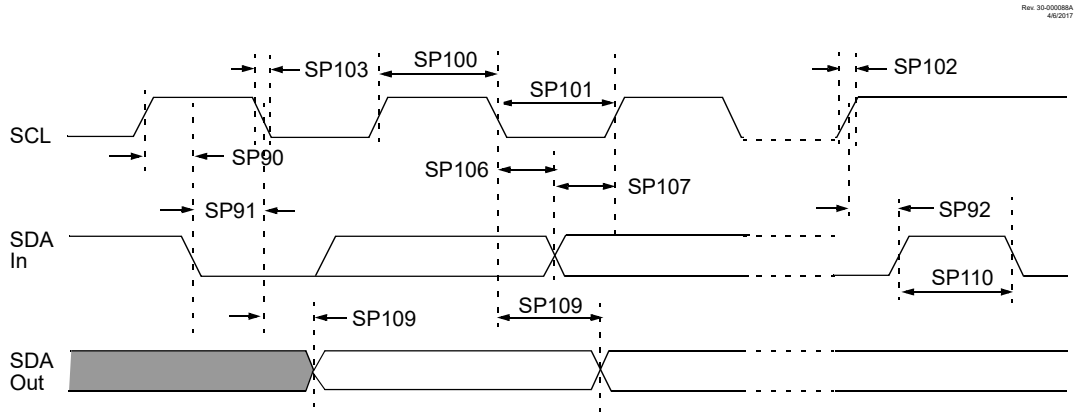

Note: Refer to Figure 32-3 for load conditions.

33. DC and AC Characteristics Graphs and Tables

The graphs and tables provided in this section are for design guidance and are not tested. In some graphs or tables, the data presented are outside specified operating range (i.e., outside specified V_{DD} range). This is for information only and devices are ensured to operate properly only within the specified range.

Note: The graphs and tables provided following this note are a statistical summary based on a limited number of samples and are provided for informational purposes only. The performance characteristics listed herein are not tested or guaranteed. In some graphs or tables, the data presented may be outside the specified operating range (e.g., outside specified power supply range) and therefore, outside the warranted range.

Note: “Typical” represents the mean of the distribution at 25°C. “Maximum”, “Max.”, “Minimum” or “Min.” represents (mean + 3σ) or (mean - 3σ) respectively, where σ is a standard deviation, over each temperature range.

33.1 Analog-to-Digital Converter (10-bit) Graphs

Figure 33-1. ADC, DNL, V_{DD} = 3.0V, T_{AD} = 1 µs

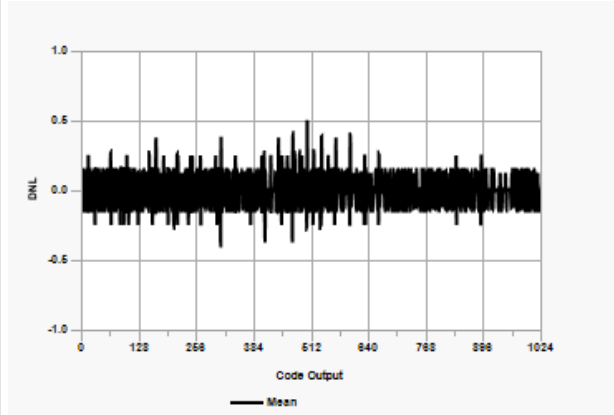

Figure 33-2. ADC, DNL, V_{DD} = 3.0V, T_{AD} = 4 µs

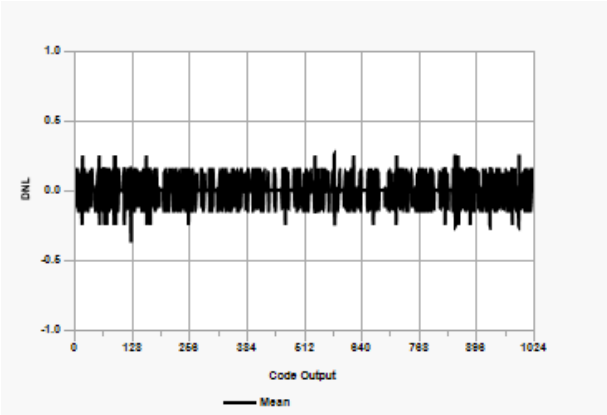

Figure 33-3. ADC, DNL, V_{DD} = 3.0V, T_{AD} = 8 µs

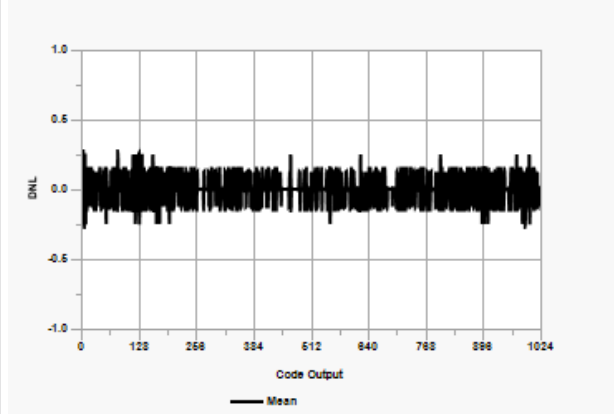

Figure 33-4. ADC, INL, V_{DD} = 3.0V, T_{AD} = 1 µs

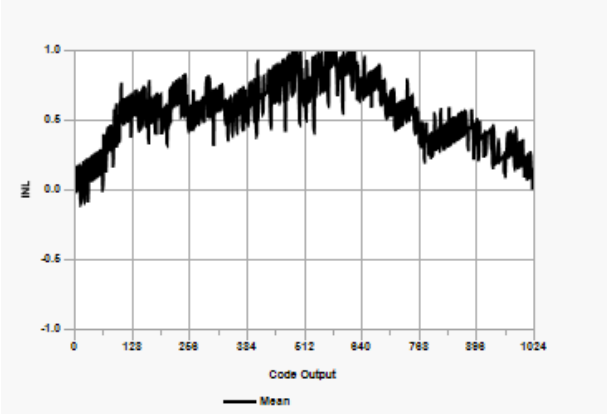

Figure 33-5. ADC, INL, V_{DD} = 3.0V, T_{AD} = 4 µs

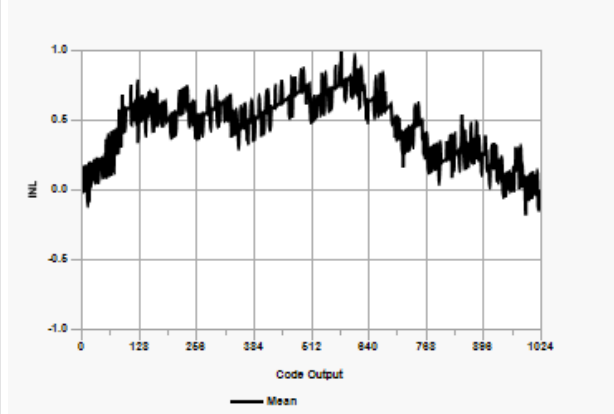

Figure 33-6. ADC, INL, V_{DD} = 3.0V, T_{AD} = 8 µs

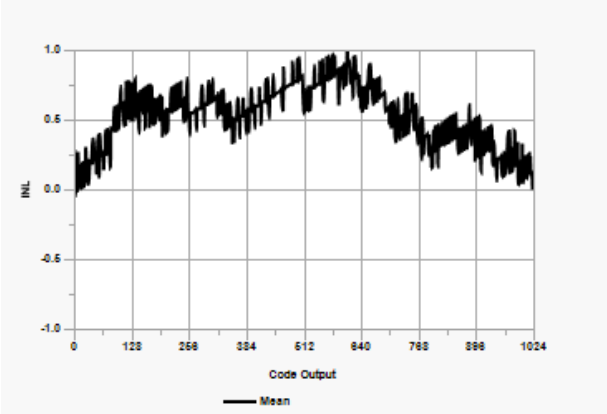

33.2 Bandgap Ready Graphs

Figure 33-7. BANDGAP READY TIME

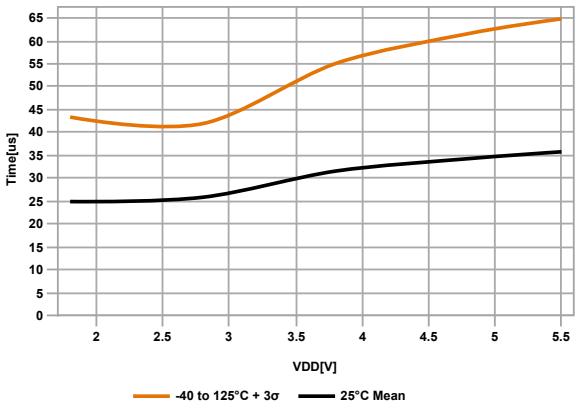

33.3 Brown-Out Reset Graphs

Figure 33-8. BROWN-OUT RESET VOLTAGE, TRIP POINT (BORV = 0)

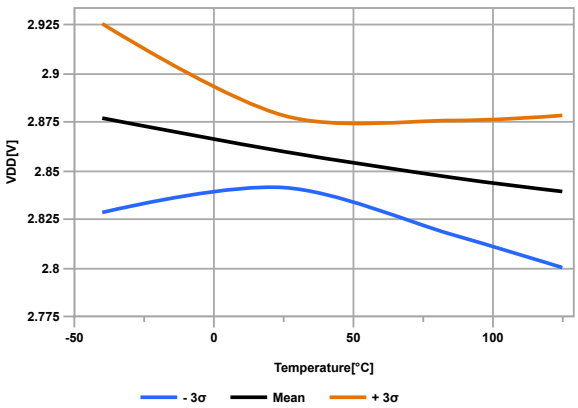

Figure 33-9. BROWN-OUT RESET HYSTERESIS, TRIP POINT (BORV = 0)

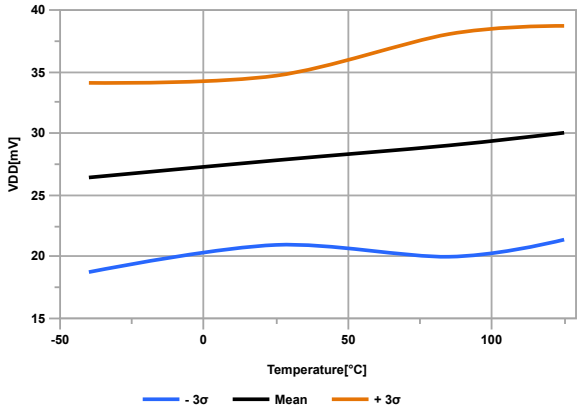

Figure 33-10. BROWN-OUT RESET VOLTAGE, TRIP POINT (BORV = 1)

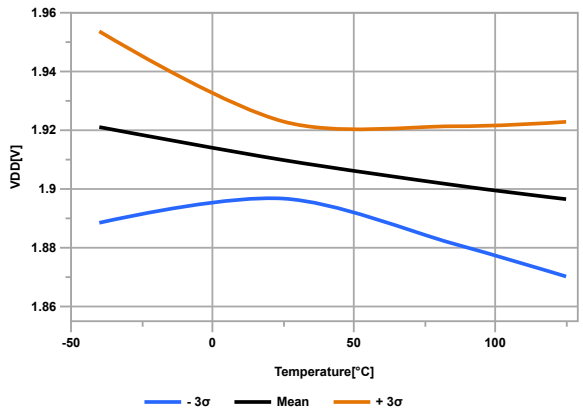

Figure 33-11. BROWN-OUT RESET HYSTERESIS, TRIP POINT (BORV = 1)

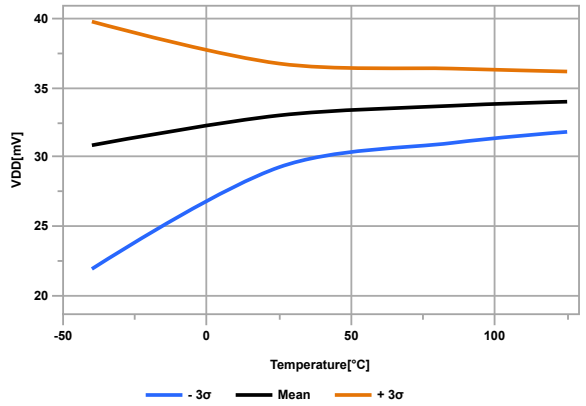

Figure 33-12. BOR Response Time

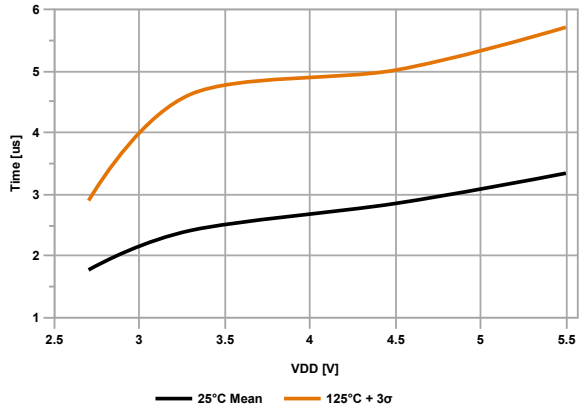

33.4 Fixed Voltage Reference Graphs

Figure 33-13. FVR Voltage Error 1x (V_{DD} = 5.5 V)

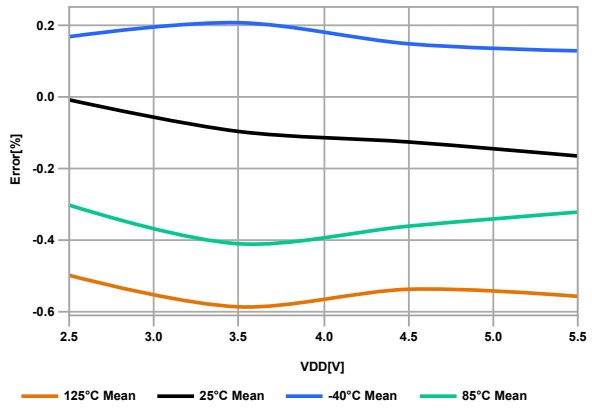

Figure 33-14. FVR Voltage Error 2x (V_{DD} = 5.5 V)

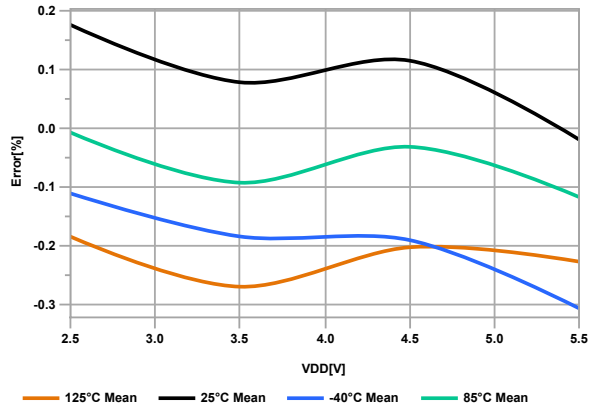

Figure 33-15. FVR Voltage Error 4x (V_{DD} = 5.5 V)

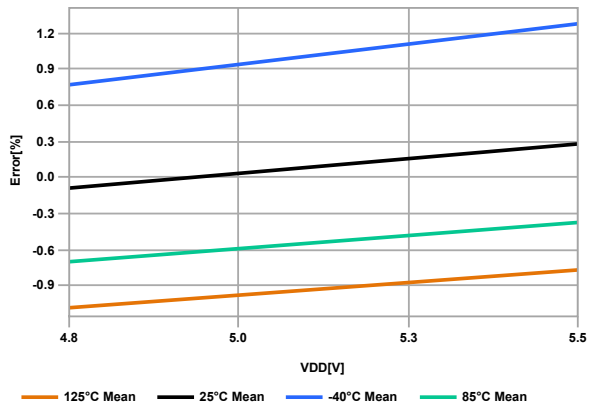

33.5 HFINTOSC Error Graphs

Figure 33-16. HFINTOSC Error % over V_{DD}

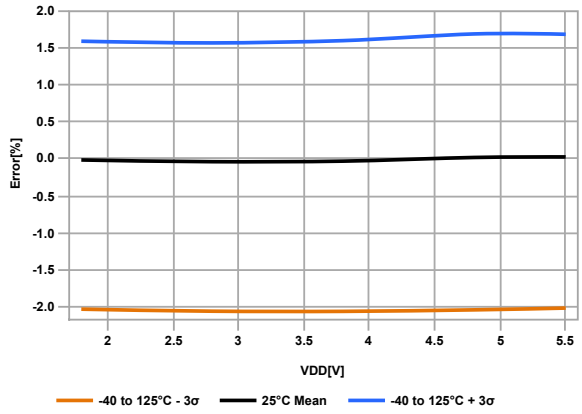

Figure 33-17. HFINTOSC Error % over Temperature, V_{DD} = 3V

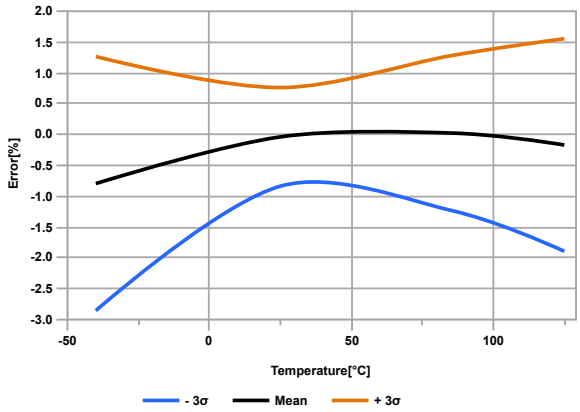

33.6 HFINTOSC Wake From Sleep Graphs

Figure 33-18. Wake From Sleep, HFINTOSC = 4MHz

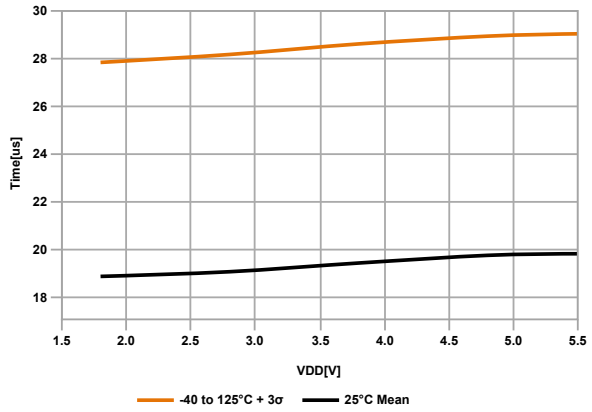

33.7 I/O Rise/Fall Times Graphs

Figure 33-19. Rise Time, Slew Rate Control enabled

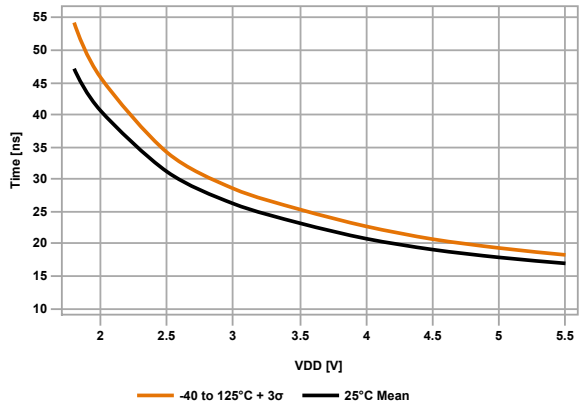

Figure 33-20. Fall Time, Slew Rate Control enabled

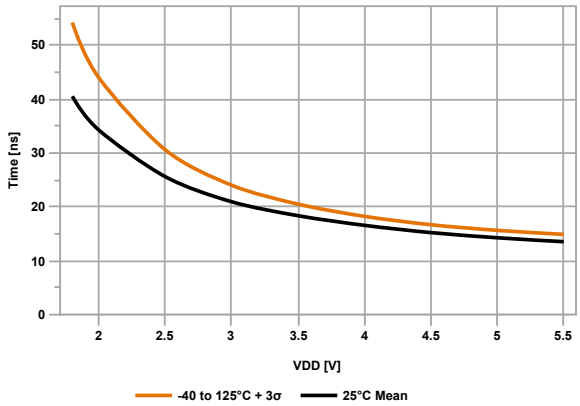

Figure 33-21. Rise Time, Slew Rate Control disabled

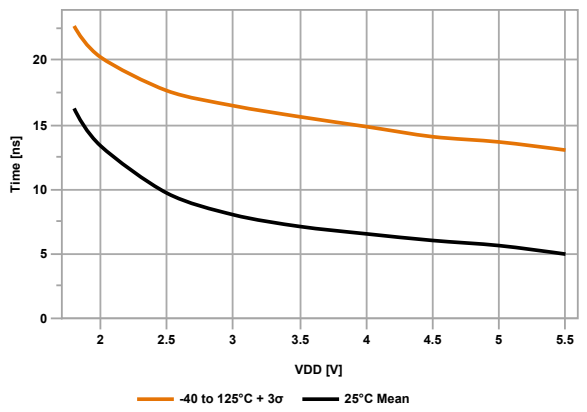

Figure 33-22. Fall Time, Slew Rate Control disabled

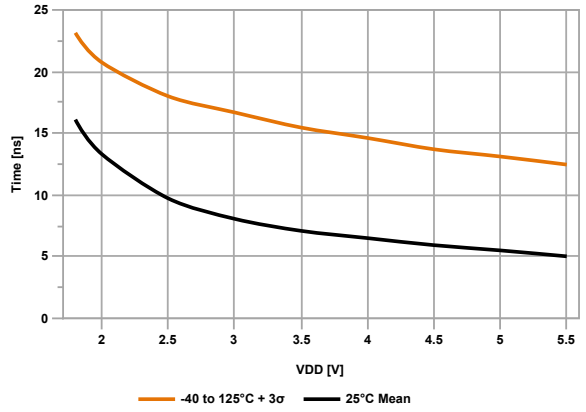

33.8 I_{DD} Graphs

Figure 33-23. I_{DD}, HFINTOSC, F_{HFO} = 16 MHz

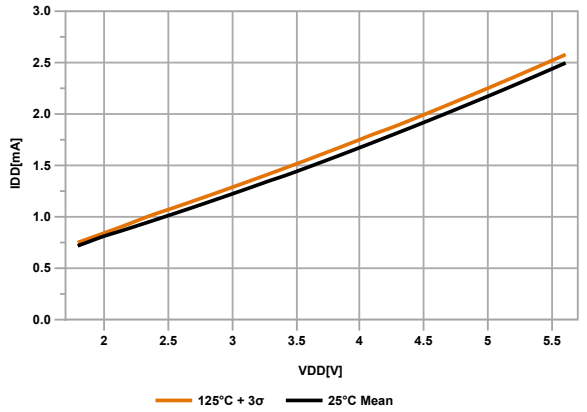

Figure 33-24. I_{DD} HFINTOSC, F_{HFO} = 32 MHz

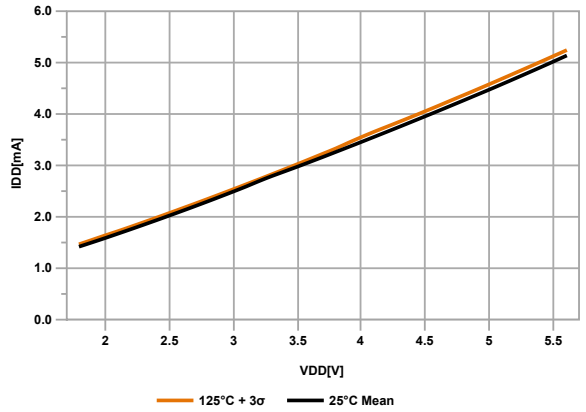

33.9 Input Buffer Graphs

Figure 33-25. Schmitt Trigger High Values

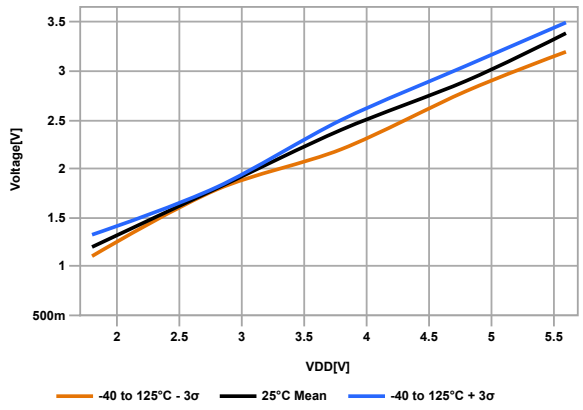

Figure 33-26. Schmitt Trigger Low Values

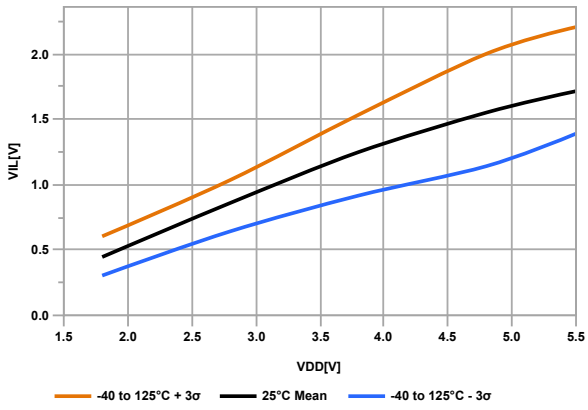

Figure 33-27. TTL Input Level

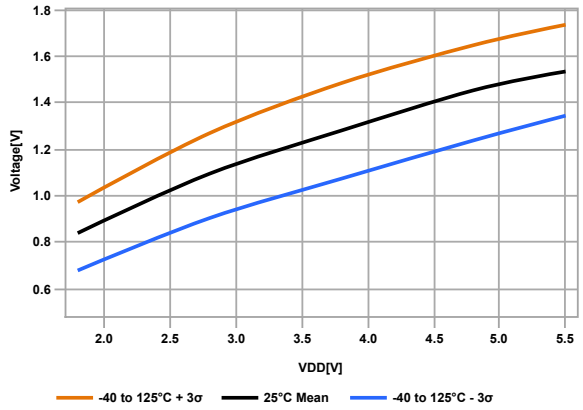

33.10 I_{PD} Graphs

Figure 33-28. I_{PD} BASE

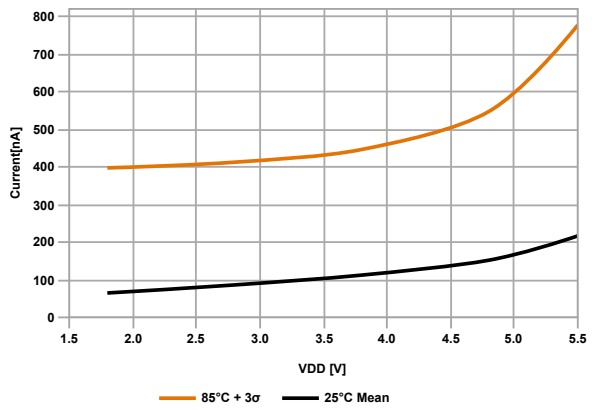

Figure 33-29. I_{PD}, BROWN-OUT RESET (BOR)

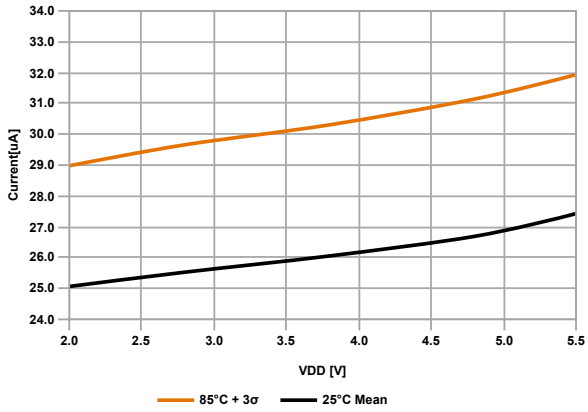

Figure 33-30. I_{PD}, FIXED VOLTAGE REFERENCE (FVR)

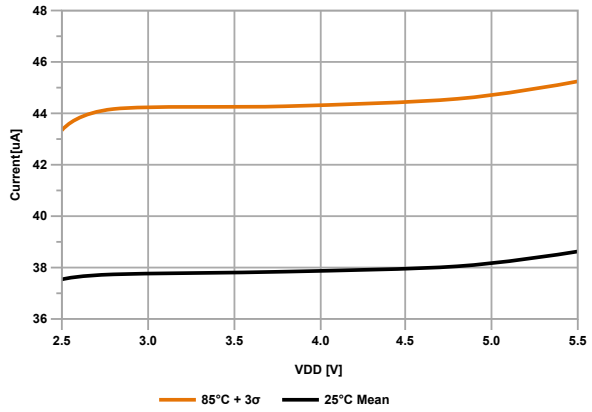

Figure 33-31. I_{PD}, WATCH DOG TIMER (WDT)

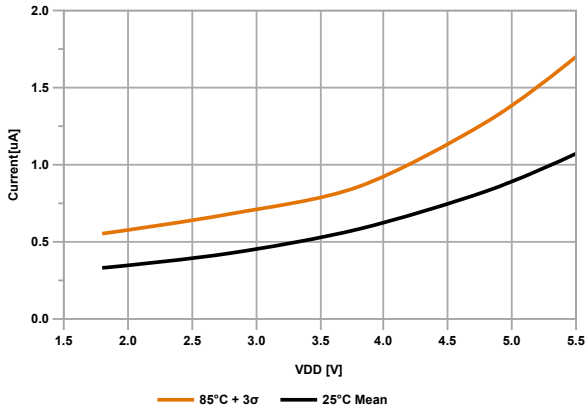

33.11 LFINTOSC Graphs

Figure 33-32. LFINTOSC Frequency Over Temperature/Voltage

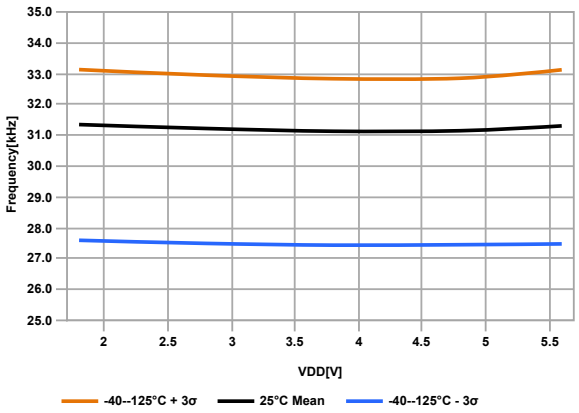

33.12 OSCTUNE Graphs

Figure 33-33. OSCTUNE Frequency Range (Normalized to Center Frequency)

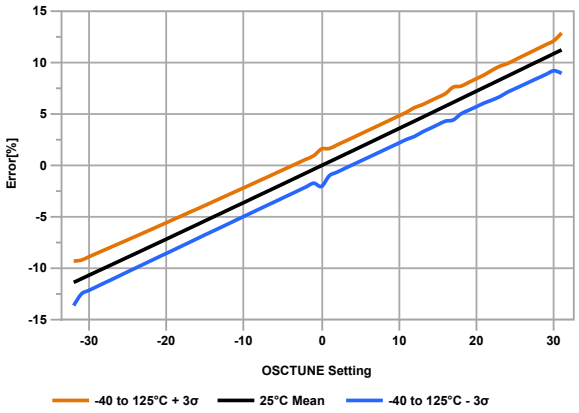

33.13 Power-On Reset Graphs

Figure 33-34. POR RELEASE VOLTAGE

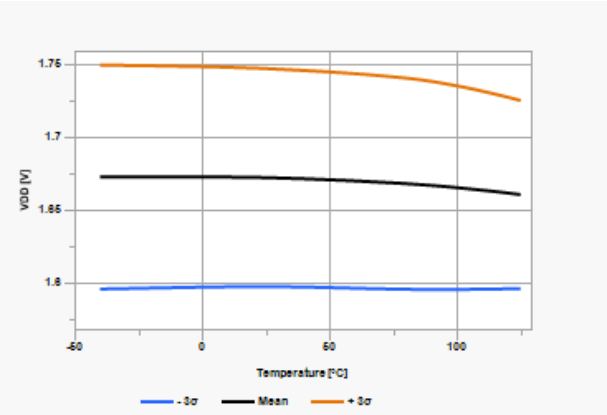

Figure 33-35. POR REARM VOLTAGE

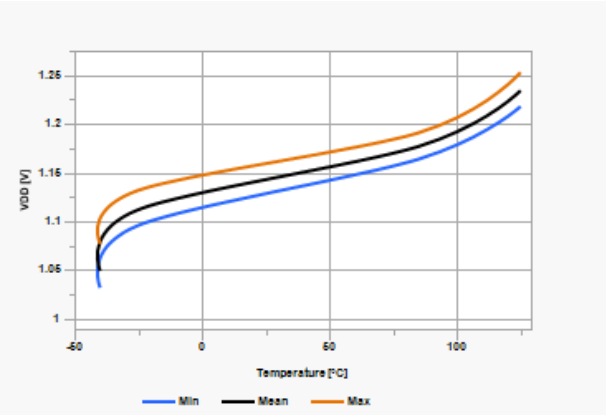

33.14 V_{OH} - V_{OL} Graphs

Figure 33-36. V_{OH} vs. I_{OH} OVER TEMPERATURE, V_{DD} = 5.5V

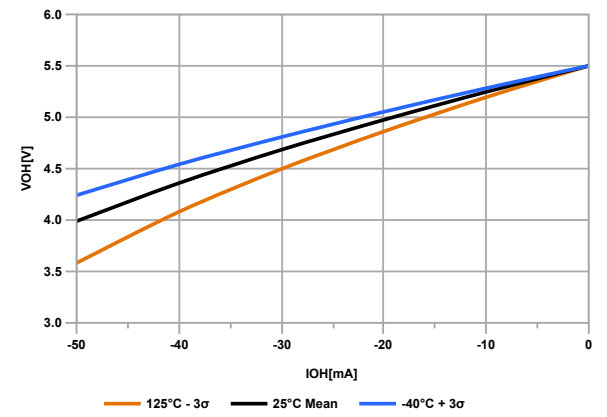

Figure 33-37. V_{OH} vs. I_{OH} OVER TEMPERATURE, V_{DD} = 3V

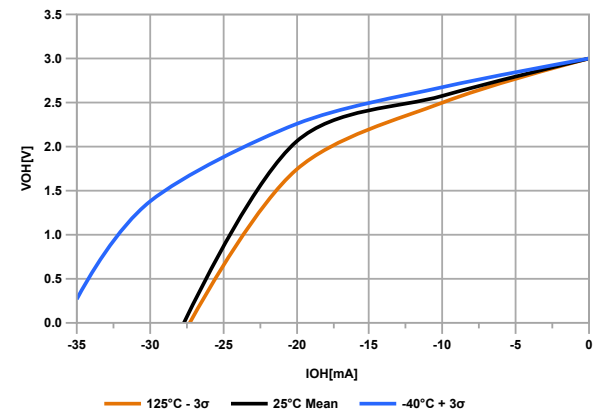

Figure 33-38. V_{OL} vs. I_{OL} OVER TEMPERATURE, V_{DD} = 5.5V

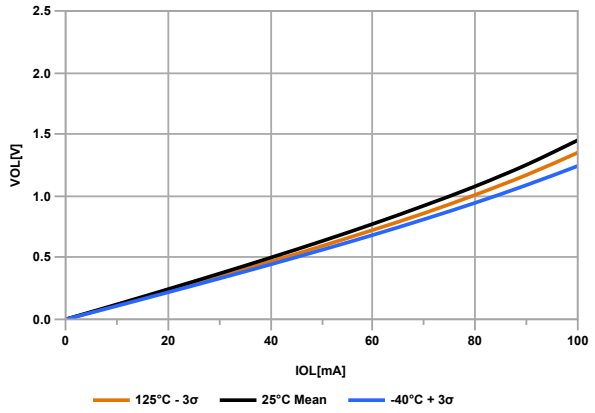

Figure 33-39. V_{OL} vs. I_{OL} OVER TEMPERATURE, V_{DD} = 3V

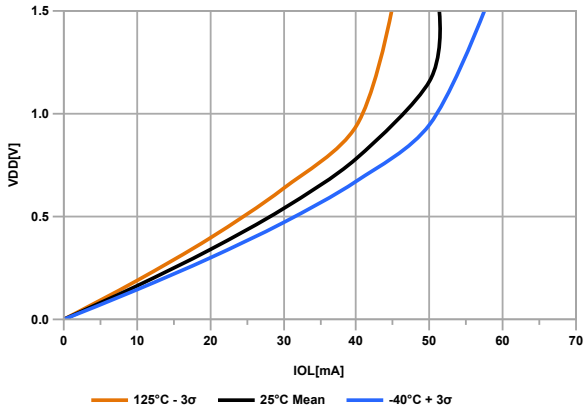

33.15 Watchdog Timer Graphs

Figure 33-40. WDT BASE TIME-OUT PERIOD (WDTPS = `00010` (4 ms))

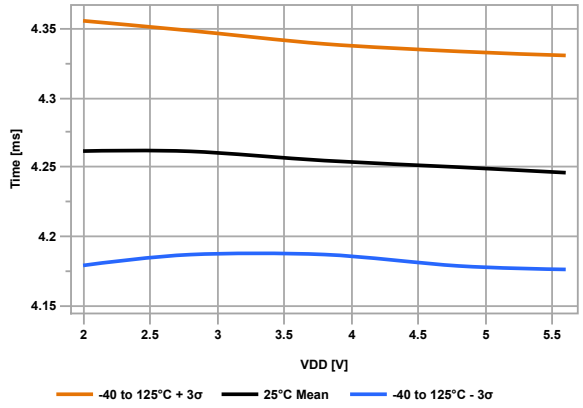

33.16 Weak Pull-Up Graphs

Figure 33-41. Weak Pull-Up Current

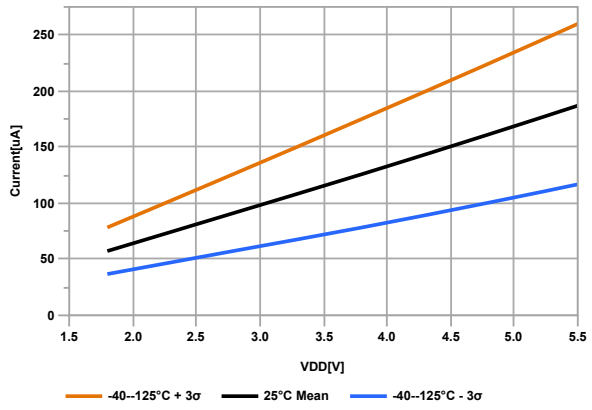

34. Packaging Information

Package Marking Information

Legend:	XX...X	Customer-specific information or Microchip part number
	Y	Year code (last digit of calendar year)
	YY	Year code (last 2 digits of calendar year)
	WW	Week code (week of January 1 is week ‘01’)
	NNN	Alphanumeric traceability code
	(e3)	Pb-free JEDEC® designator for Matte Tin (Sn)
Note:	In the event the full Microchip part number cannot be marked on one line, it will be carried over to the next line, thus limiting the number of available characters for customer-specific information.	

8-Lead Plastic Dual In-Line – 300 mil Body [PDIP]

8-Lead PDIP (300 mil)

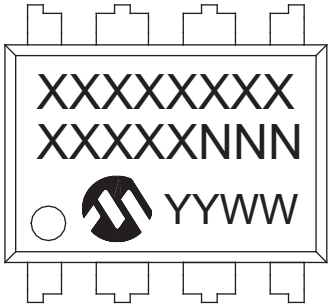

Example

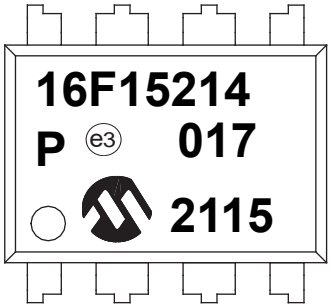

8-Lead DFN (3x3x0.9 mm)

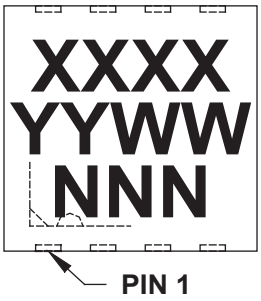

Example

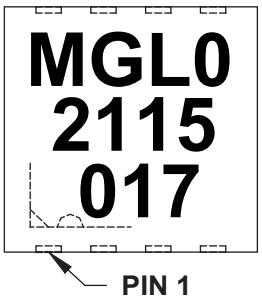

8-Lead SOIC (3.90 mm)

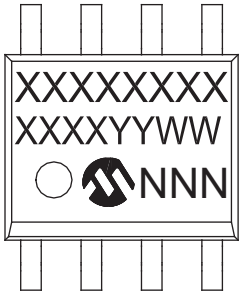

Example

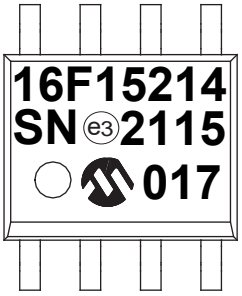

Rev. 30-009014B
09/21/2017

14-Lead TSSOP (4.4 mm)

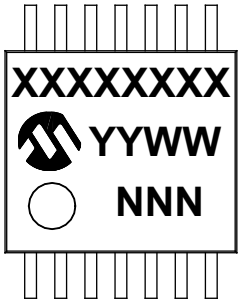

Example

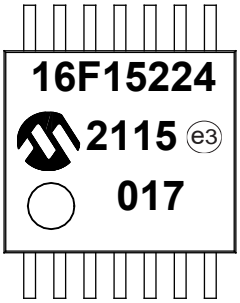

Rev. 30-009014C
09/21/2017

14-Lead SOIC (3.90 mm)

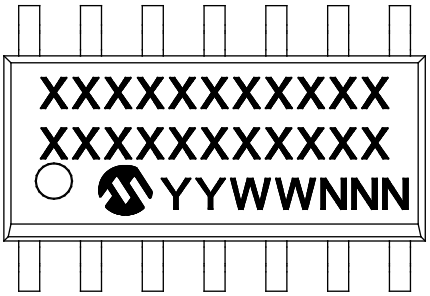

Example

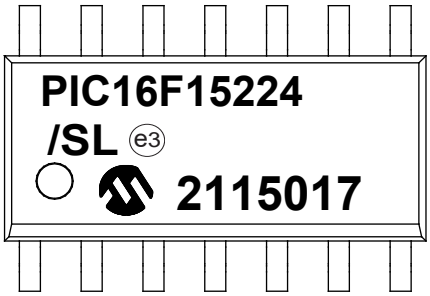

14-Lead Plastic Dual In-Line – 300 mil Body [PDIP]

14-Lead PDIP (300 mil)

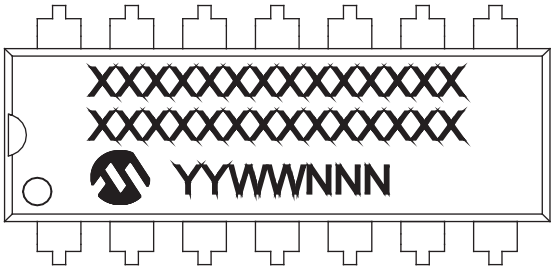

Example

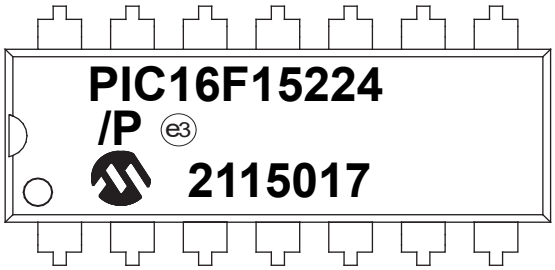

16-Lead QFN (3x3x0.9 mm)

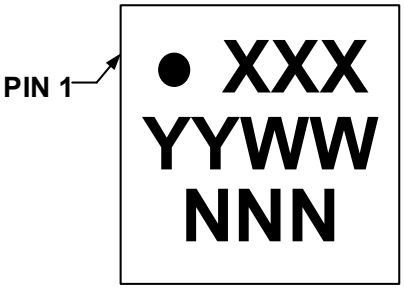

Example

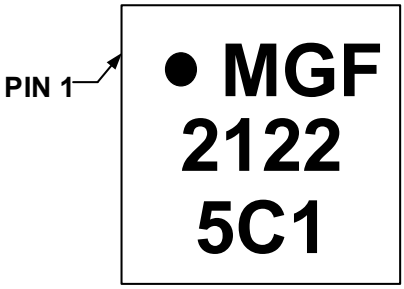

Rev. 30-0090020A
09/21/2017

20-Lead PDIP (300 mil)

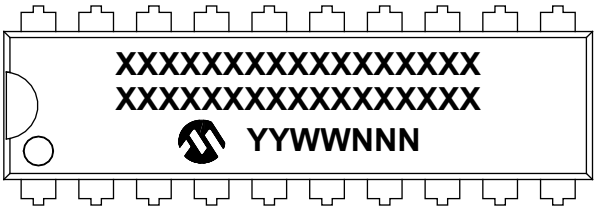

Example

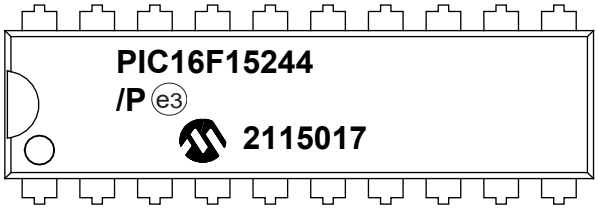

Rev. 30-009020B
09/21/2017

20-Lead SSOP (5.30 mm)

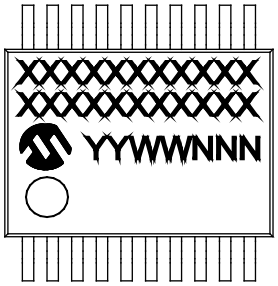

Example

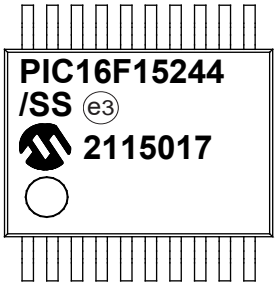

Rev. 30-009020C
09/21/2017

20-Lead SOIC (7.50 mm)

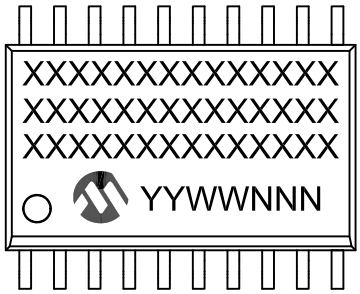

Example

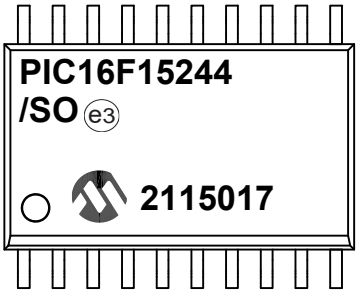

20-Lead VQFN (3x3x0.9 mm)

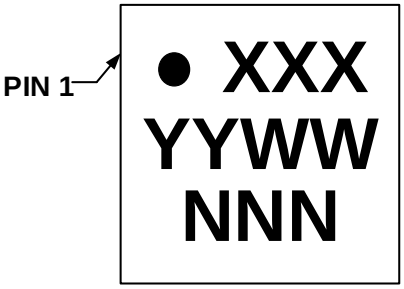

Example

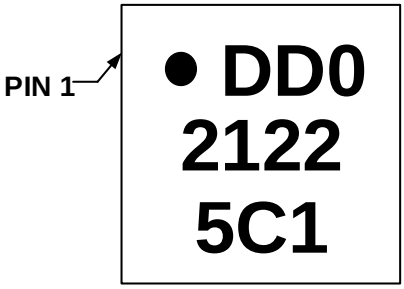

34.1 Package Details

The following sections give the technical details of the packages.

8-Lead Plastic Dual In-Line (P) - 300 mil Body [PDIP]

Note: For the most current package drawings, please see the Microchip Packaging Specification located at http://www.microchip.com/packaging

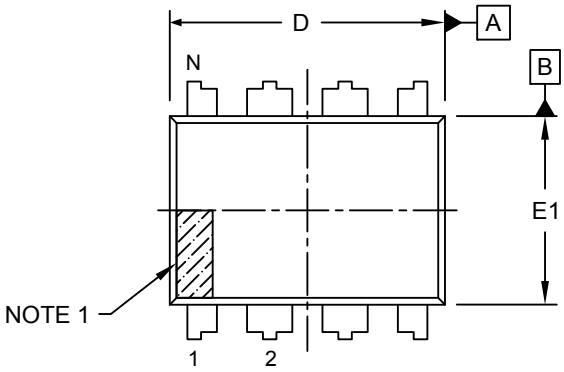

TOP VIEW

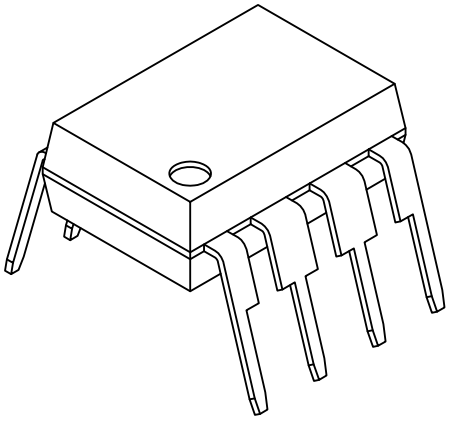

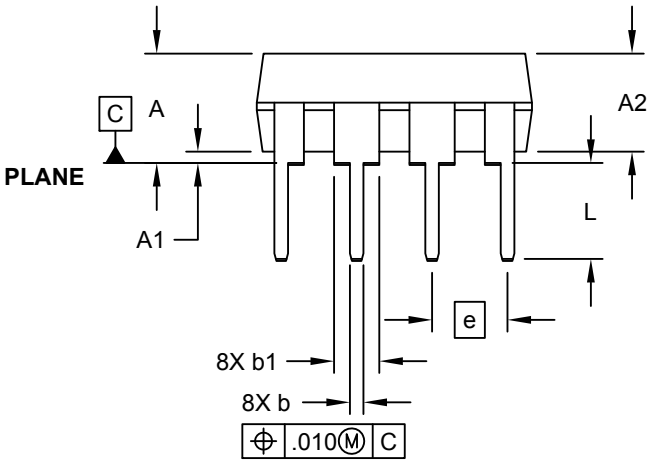

SIDE VIEW

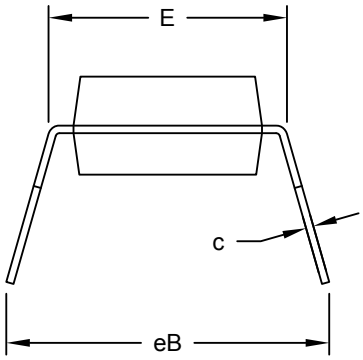

END VIEW

Microchip Technology Drawing No. C04-018-P Rev E Sheet 1 of 2

8-Lead Plastic Dual In-Line (P) - 300 mil Body [PDIP]

Note: For the most current package drawings, please see the Microchip Packaging Specification located at http://www.microchip.com/packaging

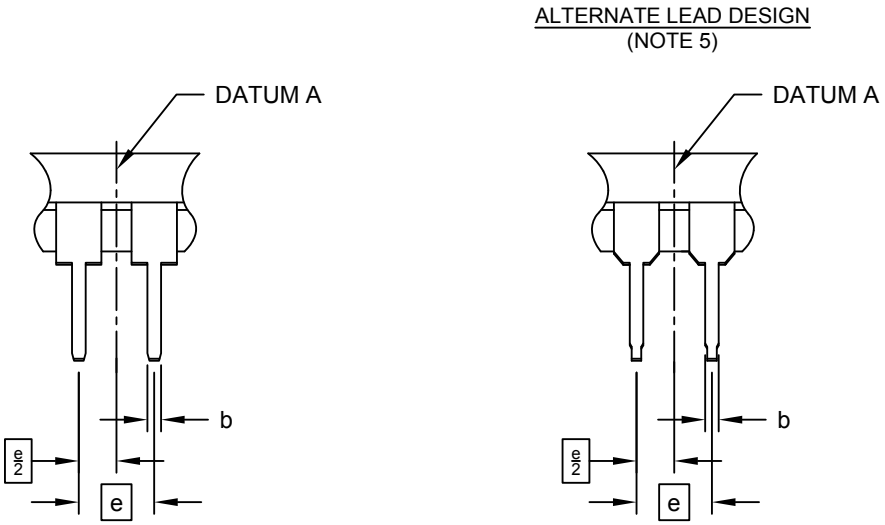

Units		INCHES		
Dimension Limits		MIN	NOM	MAX
Number of Pins	N	8		
Pitch	e	.100 BSC		
Top to Seating Plane	A	-	-	.210
Molded Package Thickness	A2	.115	.130	.195
Base to Seating Plane	A1	.015	-	-
Shoulder to Shoulder Width	E	.290	.310	.325
Molded Package Width	E1	.240	.250	.280
Overall Length	D	.348	.365	.400
Tip to Seating Plane	L	.115	.130	.150
Lead Thickness	c	.008	.010	.015
Upper Lead Width	b1	.040	.060	.070
Lower Lead Width	b	.014	.018	.022
Overall Row Spacing §	eB	-	-	.430

Notes:

1. Pin 1 visual index feature may vary, but must be located within the hatched area.
2. § Significant Characteristic
3. Dimensions D and E1 do not include mold flash or protrusions. Mold flash or protrusions shall not exceed .010" per side.
4. Dimensioning and tolerancing per ASME Y14.5M
   BSC: Basic Dimension. Theoretically exact value shown without tolerances.
5. Lead design above seating plane may vary, based on assembly vendor.

Microchip Technology Drawing No. C04-018-P Rev E Sheet 2 of 2

8-Lead Plastic Small Outline (SN) - Narrow, 3.90 mm (.150 In.) Body [SOIC]

Note: For the most current package drawings, please see the Microchip Packaging Specification located at http://www.microchip.com/packaging

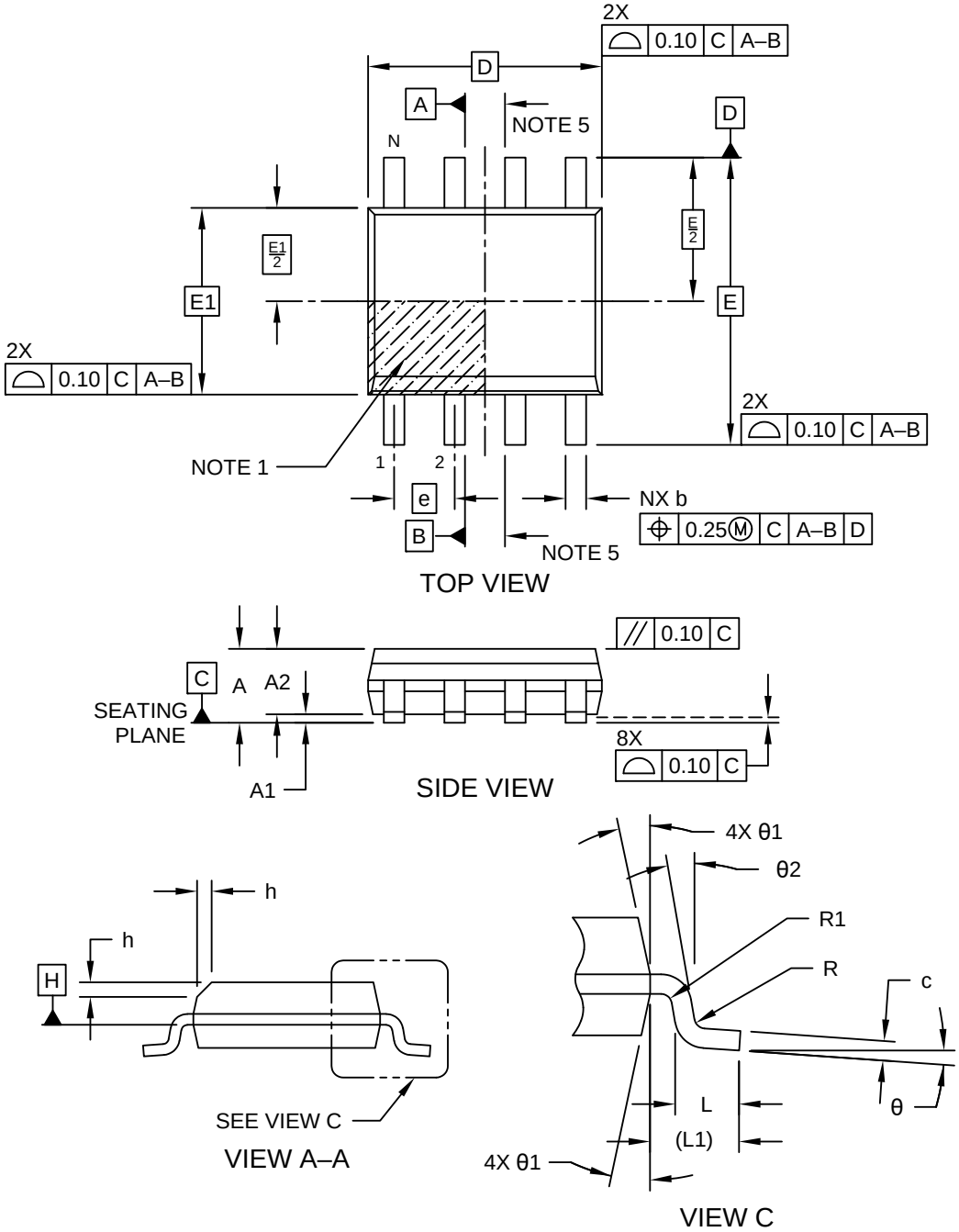

Microchip Technology Drawing No. C04-057-SN Rev G Sheet 1 of 2

8-Lead Plastic Small Outline (SN) - Narrow, 3.90 mm (.150 In.) Body [SOIC]

Note: For the most current package drawings, please see the Microchip Packaging Specification located at http://www.microchip.com/packaging

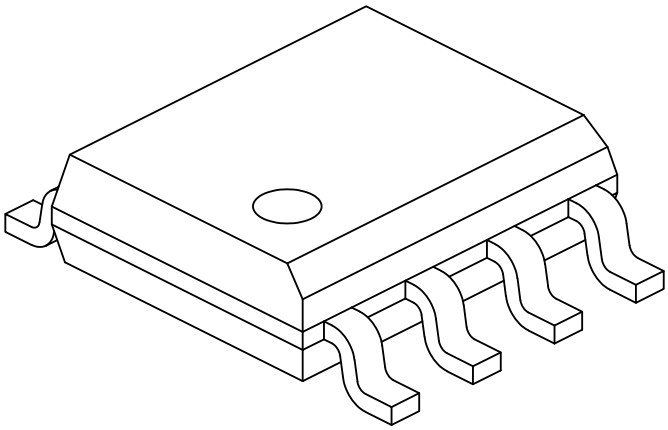

Units		MILLIMETERS		
Dimension Limits		MIN	NOM	MAX
Number of Pins	N	8		
Pitch	e	1.27 BSC		
Overall Height	A	–	–	1.75
Molded Package Thickness	A2	1.25	–	-
Standoff §	A1	0.10	–	0.25
Overall Width	E	6.00 BSC		
Molded Package Width	E1	3.90 BSC		
Overall Length	D	4.90 BSC		
Chamfer (Optional)	h	0.25	–	0.50
Foot Length	L	0.40	–	1.27
Footprint	L1	1.04 REF		
Lead Thickness	c	0.17	–	0.25
Lead Width	b	0.31	–	0.51
Lead Bend Radius	R	0.07	–	–
Lead Bend Radius	R1	0.07	–	–
Foot Angle	θ	0°	–	8°
Mold Draft Angle	θ1	5°	–	15°
Lead Angle	θ2	0°	–	8°

Notes:

1. Pin 1 visual index feature may vary, but must be located within the hatched area.
2. § Significant Characteristic
3. Dimensions D and E1 do not include mold flash or protrusions. Mold flash or protrusions shall not exceed 0.15mm per side.
4. Dimensioning and tolerancing per ASME Y14.5M
   BSC: Basic Dimension. Theoretically exact value shown without tolerances.
   REF: Reference Dimension, usually without tolerance, for information purposes only.
5. Datums A & B to be determined at Datum H.

Microchip Technology Drawing No. C04-057-SN Rev G Sheet 2 of 2

8-Lead Plastic Small Outline (SN) - Narrow, 3.90 mm (.150 In.) Body [SOIC]

Note: For the most current package drawings, please see the Microchip Packaging Specification located at http://www.microchip.com/packaging

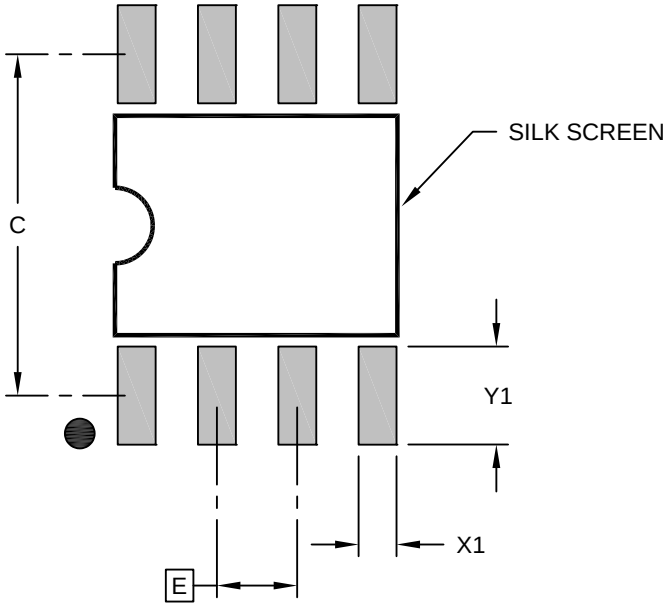

RECOMMENDED LAND PATTERN

Units		MILLIMETERS		
Dimension Limits		MIN	NOM	MAX
Contact Pitch	E	1.27 BSC		
Contact Pad Spacing	C		5.40	
Contact Pad Width (X8)	X1			0.60
Contact Pad Length (X8)	Y1			1.55

Notes:

1. Dimensioning and tolerancing per ASME Y14.5M
   BSC: Basic Dimension. Theoretically exact value shown without tolerances.

Microchip Technology Drawing C04-2057-SN Rev G

8-Lead Plastic Dual Flat, No Lead Package (MF) - 3x3x0.9mm Body [DFN]

Note: For the most current package drawings, please see the Microchip Packaging Specification located at http://www.microchip.com/packaging

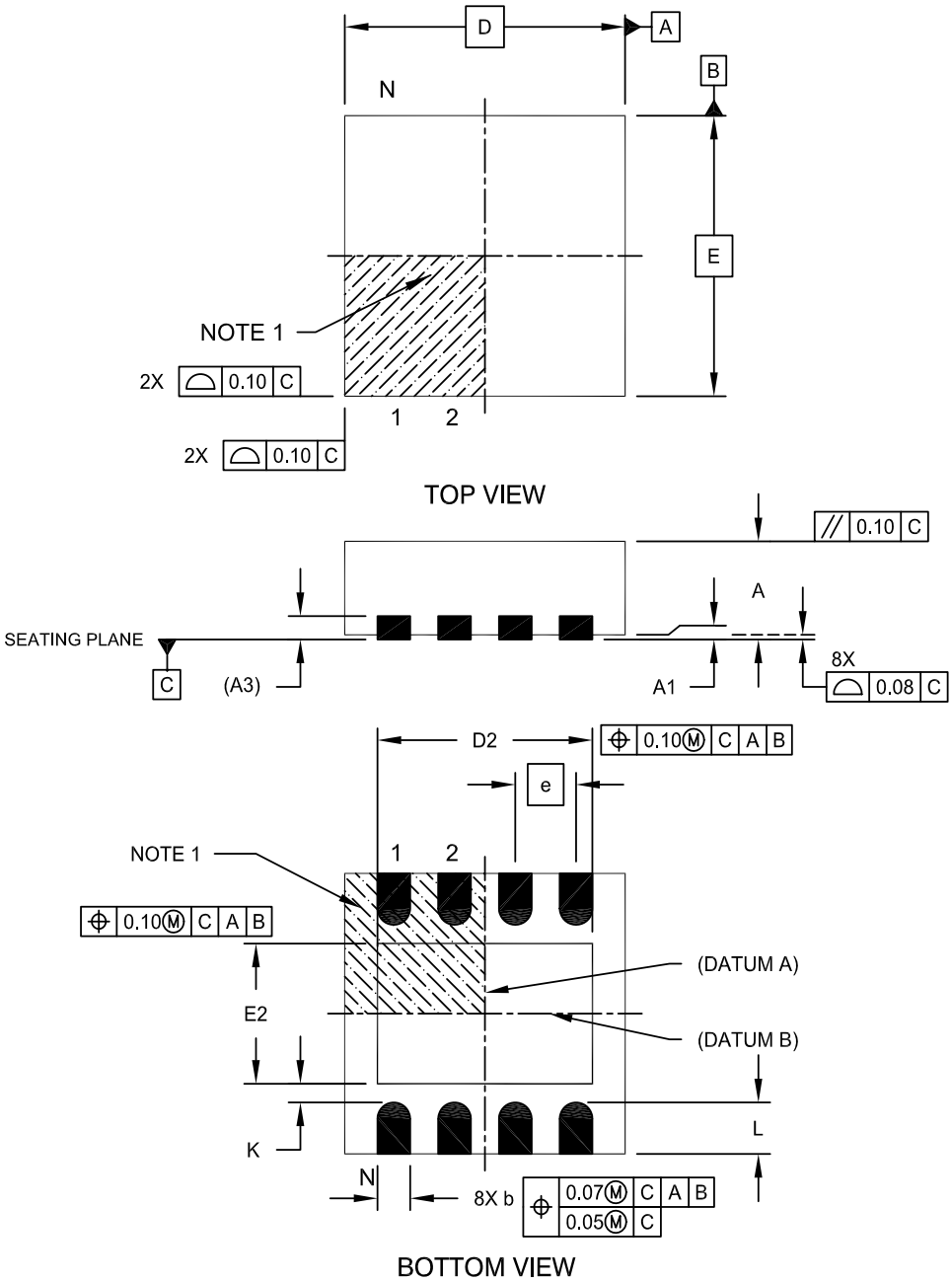

Microchip Technology Drawing No. C04-062C Sheet 1 of 2

8-Lead Plastic Dual Flat, No Lead Package (MF) - 3x3x0.9mm Body [DFN]

Note: For the most current package drawings, please see the Microchip Packaging Specification located at http://www.microchip.com/packaging

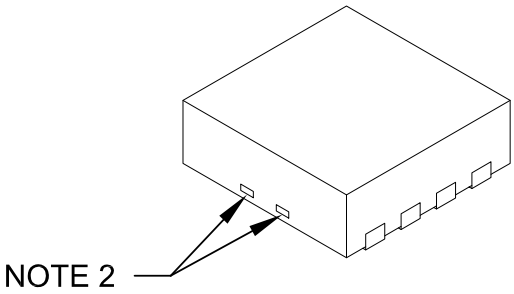

Units		MILLIMETERS		
Dimension Limits		MIN	NOM	MAX
Number of Pins	N	8		
Pitch	e	0.65 BSC		
Overall Height	A	0.80	0.90	1.00
Standoff	A1	0.00	0.02	0.05
Contact Thickness	A3	0.20 REF		
Overall Length	D	3.00 BSC		
Exposed Pad Width	E2	1.34	-	1.60
Overall Width	E	3.00 BSC		
Exposed Pad Length	D2	1.60	-	2.40
Contact Width	b	0.25	0.30	0.35
Contact Length	L	0.20	0.30	0.55
Contact-to-Exposed Pad	K	0.20	-	-

Notes:

1. Pin 1 visual index feature may vary, but must be located within the hatched area.
2. Package may have one or more exposed tie bars at ends.
3. Package is saw singulated
4. Dimensioning and tolerancing per ASME Y14.5M

   BSC: Basic Dimension. Theoretically exact value shown without tolerances.

   REF: Reference Dimension, usually without tolerance, for information purposes only.

Microchip Technology Drawing No. C04-062C Sheet 2 of 2

8-Lead Plastic Dual Flat, No Lead Package (MF) - 3x3x0.9mm Body [DFN]

Note: For the most current package drawings, please see the Microchip Packaging Specification located at http://www.microchip.com/packaging

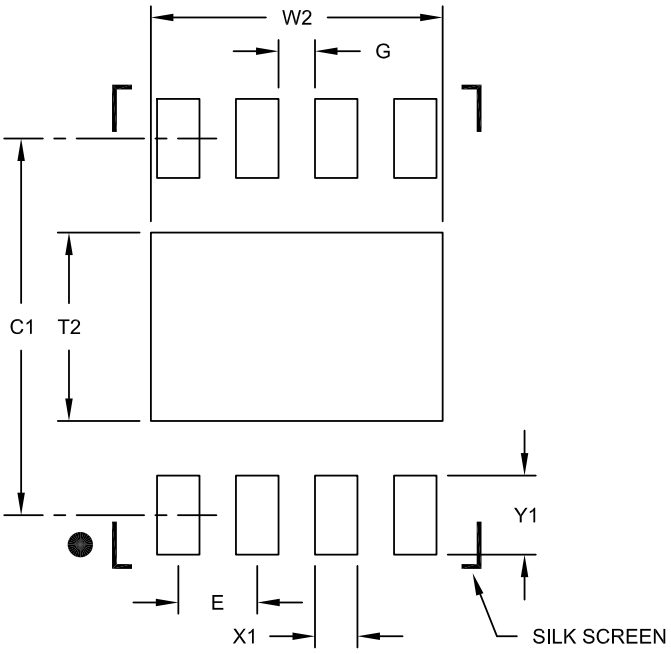

RECOMMENDED LAND PATTERN

Units		MILLIMETERS		
Dimension Limits		MIN	NOM	MAX
Contact Pitch	E		0.65 BSC	
Optional Center Pad Width	W2			2.40
Optional Center Pad Length	T2			1.55
Contact Pad Spacing	C1		3.10	
Contact Pad Width (X8)	X1			0.35
Contact Pad Length (X8)	Y1			0.65
Distance Between Pads	G	0.30		

Notes:

1. Dimensioning and tolerancing per ASME Y14.5M
   BSC: Basic Dimension. Theoretically exact value shown without tolerances.

Microchip Technology Drawing No. C04-2062B

14-Lead Plastic Dual In-Line (P) – 300 mil Body [PDIP]

Note: For the most current package drawings, please see the Microchip Packaging Specification located at http://www.microchip.com/packaging

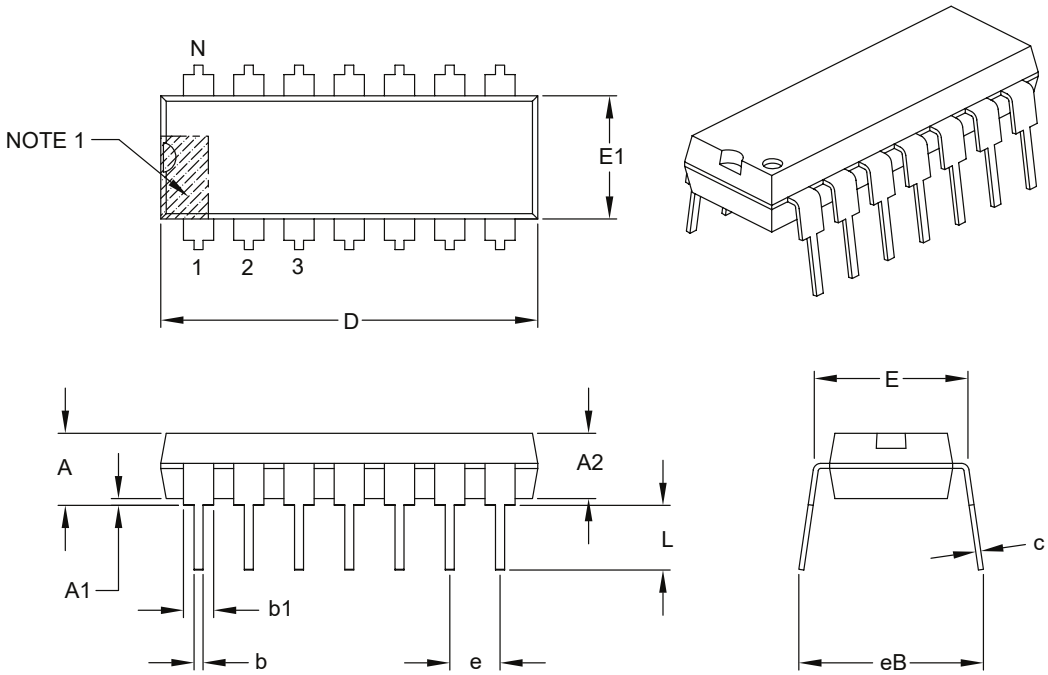

Units		INCHES		
Dimension Limits		MIN	NOM	MAX
Number of Pins	N	14		
Pitch	e	.100 BSC		
Top to Seating Plane	A	–	–	.210
Molded Package Thickness	A2	.115	.130	.195
Base to Seating Plane	A1	.015	–	–
Shoulder to Shoulder Width	E	.290	.310	.325
Molded Package Width	E1	.240	.250	.280
Overall Length	D	.735	.750	.775
Tip to Seating Plane	L	.115	.130	.150
Lead Thickness	c	.008	.010	.015
Upper Lead Width	b1	.045	.060	.070
Lower Lead Width	b	.014	.018	.022
Overall Row Spacing §	eB	–	–	.430

Notes:
1. Pin 1 visual index feature may vary, but must be located with the hatched area.
2. § Significant Characteristic.
3. Dimensions D and E1 do not include mold flash or protrusions. Mold flash or protrusions shall not exceed .010" per side.
4. Dimensioning and tolerancing per ASME Y14.5M.
   BSC: Basic Dimension. Theoretically exact value shown without tolerances.

Microchip Technology Drawing C04-005B

14-Lead Plastic Small Outline (SL) - Narrow, 3.90 mm Body [SOIC]

Note: For the most current package drawings, please see the Microchip Packaging Specification located at http://www.microchip.com/packaging

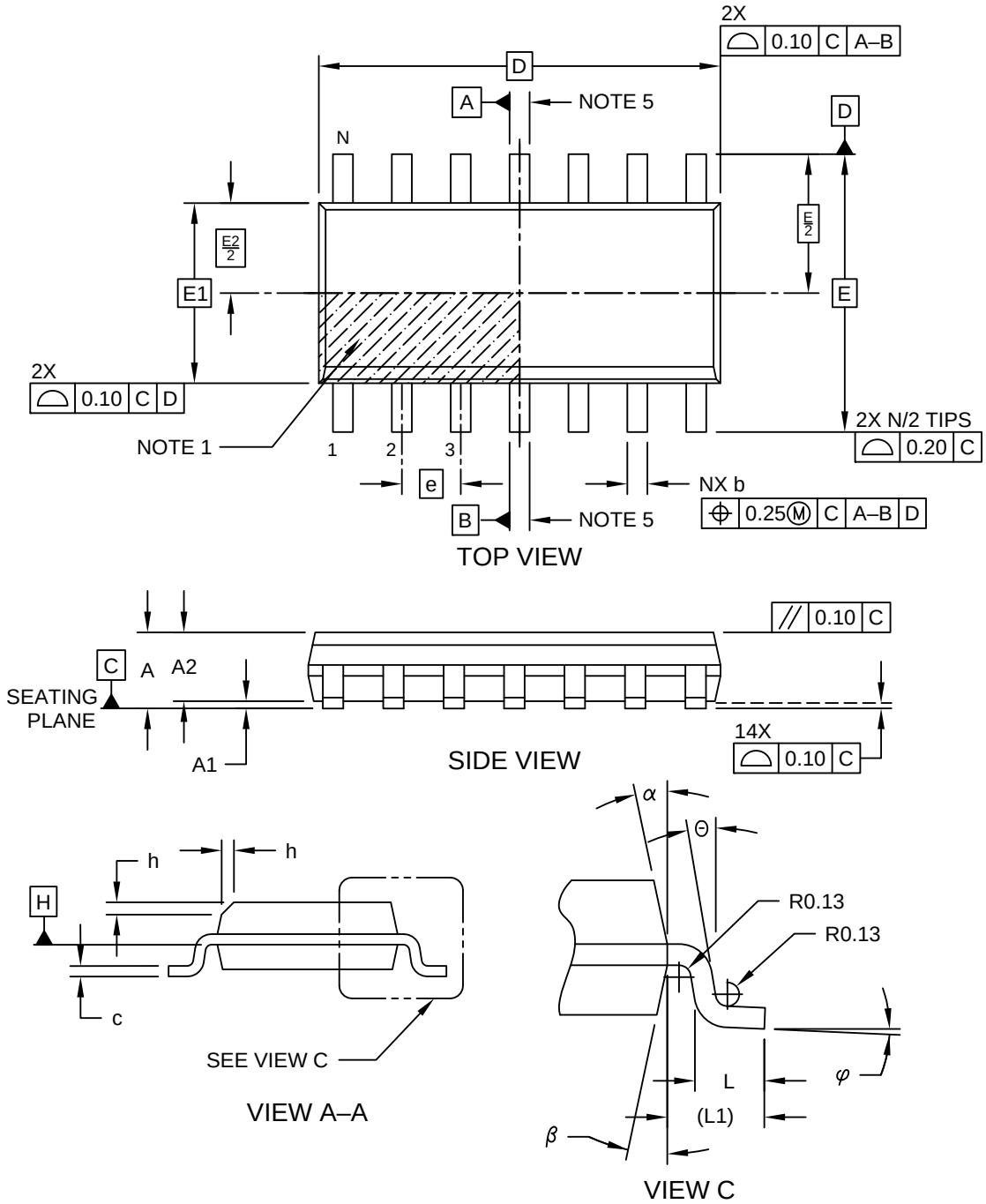

Microchip Technology Drawing No. C04-065-SL Rev D Sheet 1 of 2

14-Lead Plastic Small Outline (SL) - Narrow, 3.90 mm Body [SOIC]

Note: For the most current package drawings, please see the Microchip Packaging Specification located at http://www.microchip.com/packaging

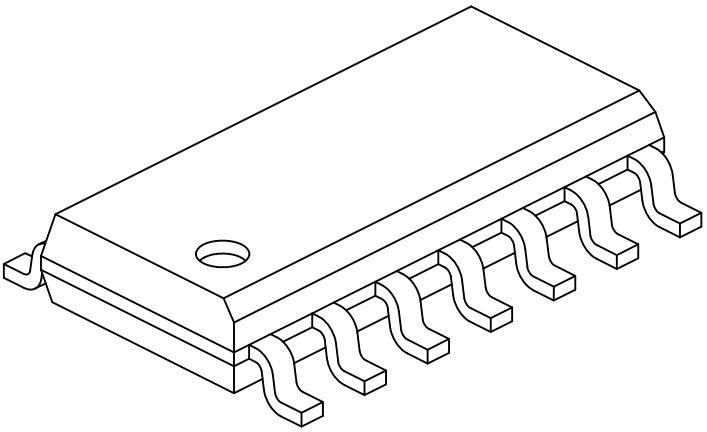

Units		MILLIMETERS		
Dimension Limits		MIN	NOM	MAX
Number of Pins	N	14		
Pitch	e	1.27 BSC		
Overall Height	A	-	-	1.75
Molded Package Thickness	A2	1.25	-	-
Standoff §	A1	0.10	-	0.25
Overall Width	E	6.00 BSC		
Molded Package Width	E1	3.90 BSC		
Overall Length	D	8.65 BSC		
Chamfer (Optional)	h	0.25	-	0.50
Foot Length	L	0.40	-	1.27
Footprint	L1	1.04 REF		
Lead Angle	Θ	0°	-	-
Foot Angle	φ	0°	-	8°
Lead Thickness	c	0.10	-	0.25
Lead Width	b	0.31	-	0.51
Mold Draft Angle Top	α	5°	-	15°
Mold Draft Angle Bottom	β	5°	-	15°

Notes:

1. Pin 1 visual index feature may vary, but must be located within the hatched area.
2. § Significant Characteristic
3. Dimension D does not include mold flash, protrusions or gate burrs, which shall not exceed 0.15 mm per end. Dimension E1 does not include interlead flash or protrusion, which shall not exceed 0.25 mm per side.
4. Dimensioning and tolerancing per ASME Y14.5M
   BSC: Basic Dimension. Theoretically exact value shown without tolerances.
   REF: Reference Dimension, usually without tolerance, for information purposes only.
5. Datums A & B to be determined at Datum H.

Microchip Technology Drawing No. C04-065-SL Rev D Sheet 2 of 2

14-Lead Plastic Small Outline (SL) - Narrow, 3.90 mm Body [SOIC]

Note: For the most current package drawings, please see the Microchip Packaging Specification located at http://www.microchip.com/packaging

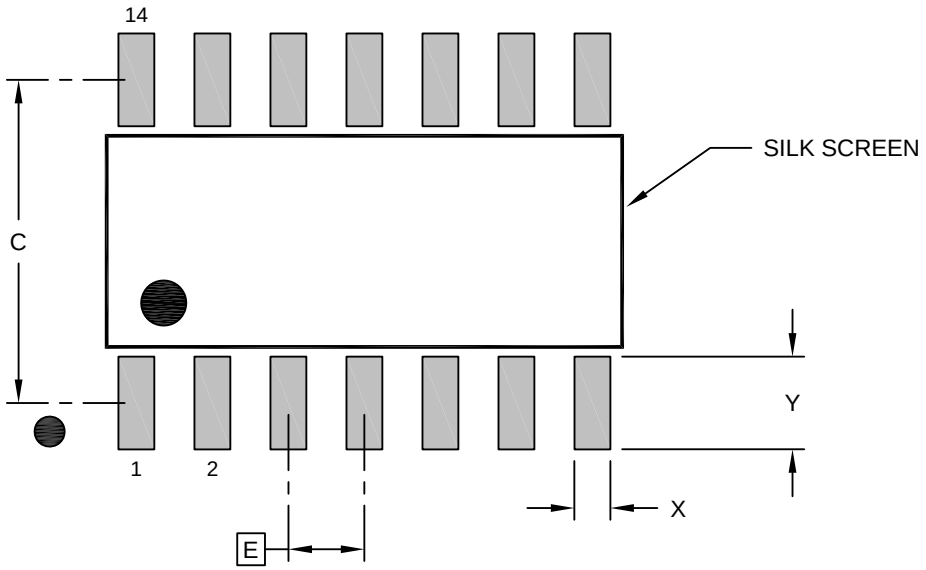

RECOMMENDED LAND PATTERN

Units		MILLIMETERS		
Dimension Limits		MIN	NOM	MAX
Contact Pitch	E		1.27 BSC	
Contact Pad Spacing	C		5.40	
Contact Pad Width (X14)	X			0.60
Contact Pad Length (X14)	Y			1.55

Notes:

1. Dimensioning and tolerancing per ASME Y14.5M
   BSC: Basic Dimension. Theoretically exact value shown without tolerances.

Microchip Technology Drawing No. C04-2065-SL Rev D

14-Lead Thin Shrink Small Outline Package [ST] – 4.4 mm Body [TSSOP]

Note: For the most current package drawings, please see the Microchip Packaging Specification located at http://www.microchip.com/packaging

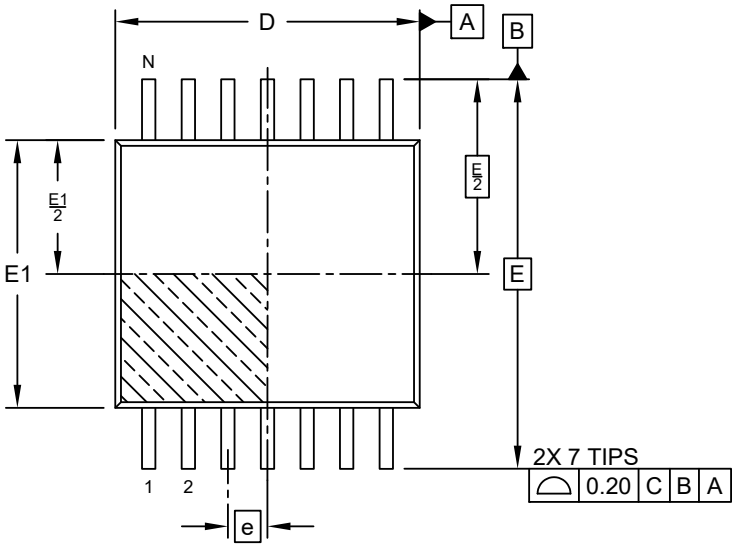

TOP VIEW

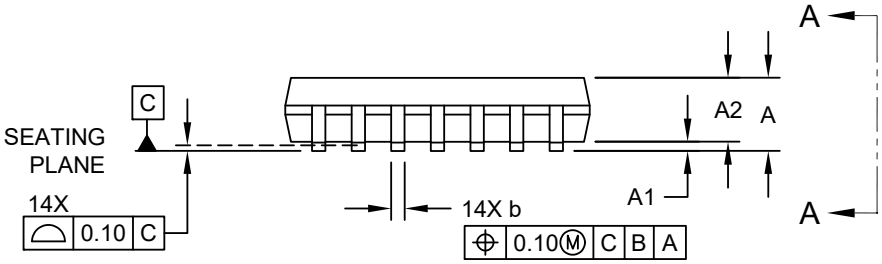

SIDE VIEW

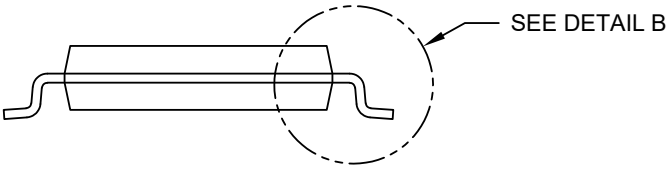

VIEW A–A

Microchip Technology Drawing C04-087 Rev E Sheet 1 of 2

14-Lead Thin Shrink Small Outline Package [ST] – 4.4 mm Body [TSSOP]

Note: For the most current package drawings, please see the Microchip Packaging Specification located at http://www.microchip.com/packaging

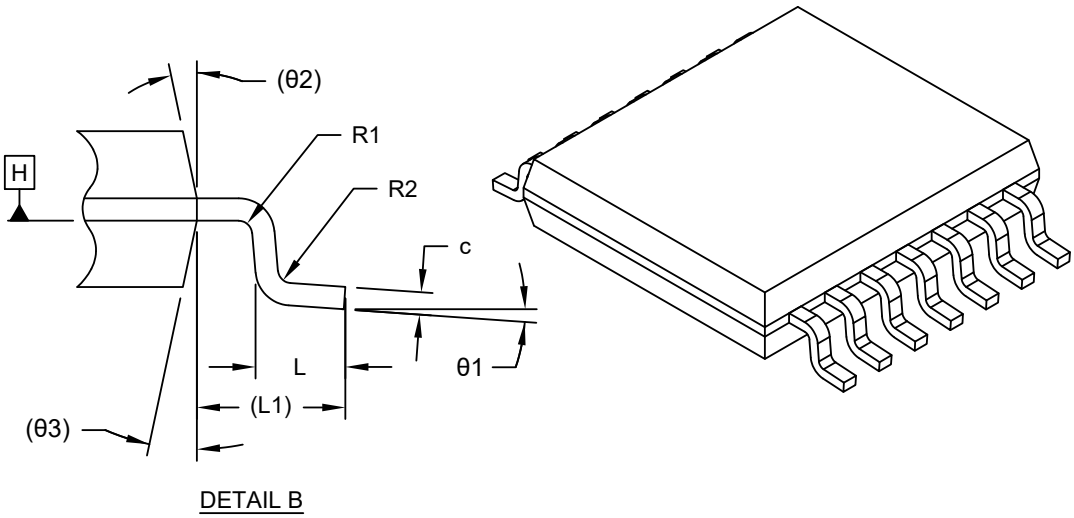

Units		MILLIMETERS		
Dimension Limits		MIN	NOM	MAX
Number of Terminals	N	14		
Pitch	e	0.65 BSC		
Overall Height	A	–	–	1.20
Standoff	A1	0.05	–	0.15
Molded Package Thickness	A2	0.80	1.00	1.05
Overall Length	D	4.90	5.00	5.10
Overall Width	E	6.40 BSC		
Molded Package Width	E1	4.30	4.40	4.50
Terminal Width	b	0.19	–	0.30
Terminal Thickness	c	0.09	–	0.20
Terminal Length	L	0.45	0.60	0.75
Footprint	L1	1.00 REF		
Lead Bend Radius	R1	0.09	–	–
Lead Bend Radius	R2	0.09	–	–
Foot Angle	θ1	0°	–	8°
Mold Draft Angle	θ2	–	12° REF	–
Mold Draft Angle	θ3	–	12° REF	–

Notes:

1. Pin 1 visual index feature may vary, but must be located within the hatched area.
2. Dimensioning and tolerancing per ASME Y14.5M
   BSC: Basic Dimension. Theoretically exact value shown without tolerances.
   REF: Reference Dimension, usually without tolerance, for information purposes only.

Microchip Technology Drawing C04-087 Rev E Sheet 2 of 2

14-Lead Thin Shrink Small Outline Package [ST] – 4.4 mm Body [TSSOP]

Note: For the most current package drawings, please see the Microchip Packaging Specification located at http://www.microchip.com/packaging

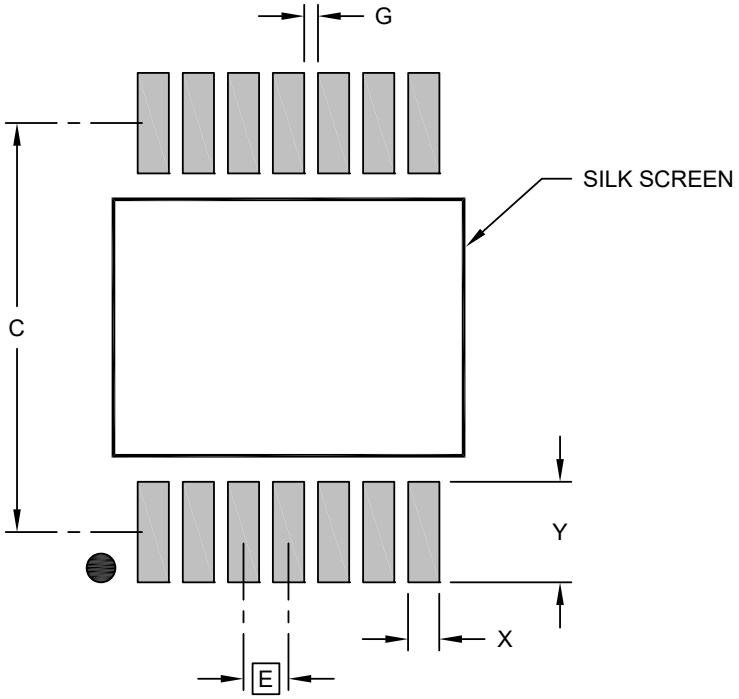

RECOMMENDED LAND PATTERN

Units		MILLIMETERS		
Dimension Limits		MIN	NOM	MAX
Contact Pitch	E		0.65 BSC	
Contact Pad Spacing	C		5.90	
Contact Pad Width (Xnn)	X			0.45
Contact Pad Length (Xnn)	Y			1.45
Contact Pad to Contact Pad (Xnn)	G	0.20		

Notes:

1. Dimensioning and tolerancing per ASME Y14.5M
   BSC: Basic Dimension. Theoretically exact value shown without tolerances.

Microchip Technology Drawing C04-2087 Rev E

16-Lead Plastic Quad Flat, No Lead Package (MG) - 3x3x0.9 mm Body [QFN]

Note: For the most current package drawings, please see the Microchip Packaging Specification located at http://www.microchip.com/packaging

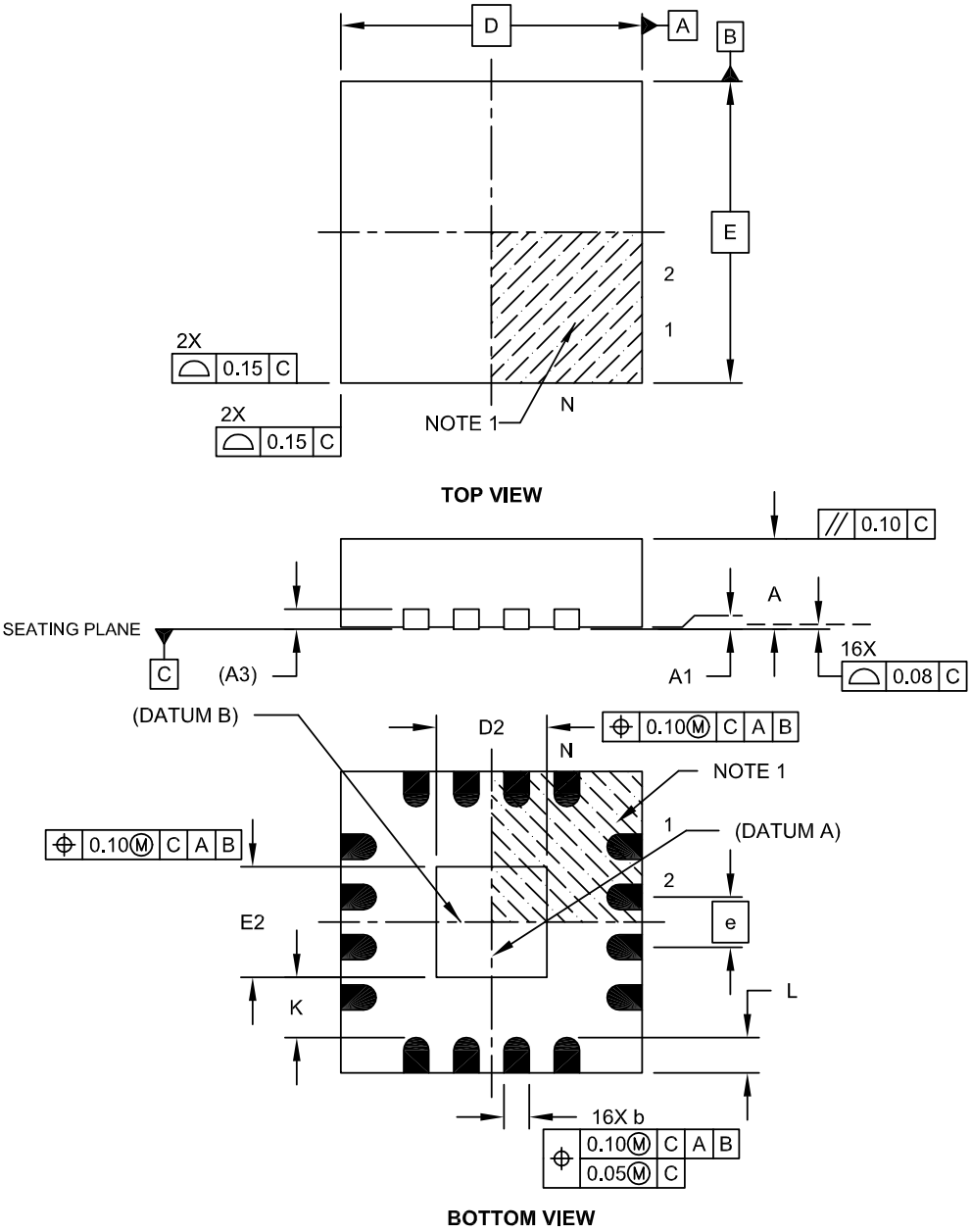

Microchip Technology Drawing C04-142A Sheet 1 of 2

16-Lead Plastic Quad Flat, No Lead Package (MG) - 3x3x0.9 mm Body [QFN]

Note: For the most current package drawings, please see the Microchip Packaging Specification located at http://www.microchip.com/packaging

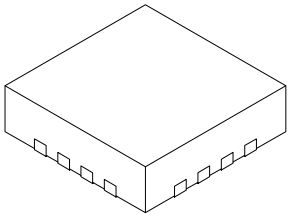

Units		MILLIMETERS		
Dimension Limits		MIN	NOM	MAX
Number of Pins	N	16		
Pitch	e	0.50 BSC		
Overall Height	A	0.80	0.85	0.90
Standoff	A1	0.00	0.02	0.05
Contact Thickness	A3	0.20 REF		
Overall Width	E	3.00 BSC		
Exposed Pad Width	E2	1.00	1.10	1.50
Overall Length	D	3.00 BSC		
Exposed Pad Length	D2	1.00	1.10	1.50
Contact Width	b	0.18	0.25	0.30
Contact Length	L	0.25	0.35	0.45
Contact-to-Exposed Pad	K	0.20	-	-

Notes:
1. Pin 1 visual index feature may vary, but must be located within the hatched area.
2. Package is saw singulated.
3. Dimensioning and tolerancing per ASME Y14.5M.
   BSC: Basic Dimension. Theoretically exact value shown without tolerances.
   REF: Reference Dimension, usually without tolerance, for information purposes only.

Microchip Technology Drawing C04-142A Sheet 2 of 2

16-Lead Plastic Quad Flat, No Lead Package (MG) – 3x3x0.9 mm Body [QFN]

Note: For the most current package drawings, please see the Microchip Packaging Specification located at http://www.microchip.com/packaging

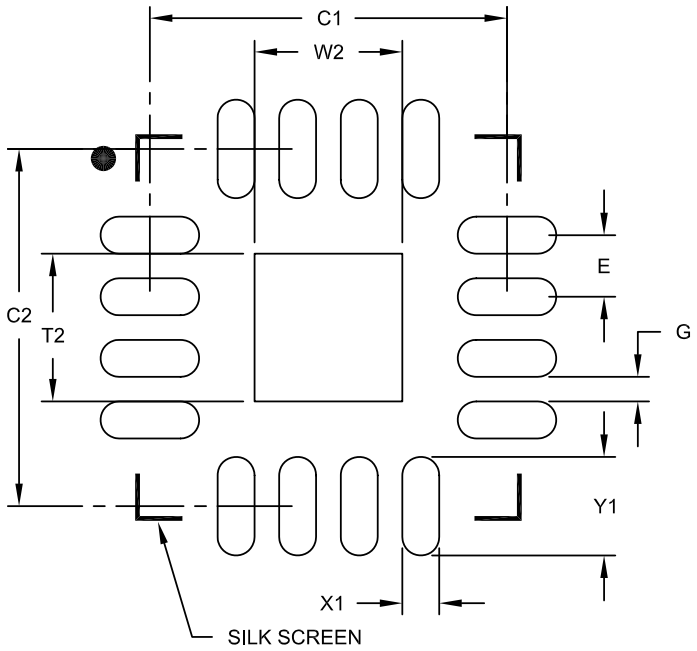

RECOMMENDED LAND PATTERN

Units		MILLIMETERS		
Dimension Limits		MIN	NOM	MAX
Contact Pitch	E		0.50 BSC	
Optional Center Pad Width	W2			1.20
Optional Center Pad Length	T2			1.20
Contact Pad Spacing	C1		2.90	
Contact Pad Spacing	C2		2.90	
Contact Pad Width (X16)	X1			0.30
Contact Pad Length (X16)	Y1			0.80
Distance Between Pads	G	0.20		

Notes:

1. Dimensioning and tolerancing per ASME Y14.5M
   BSC: Basic Dimension. Theoretically exact value shown without tolerances.

Microchip Technology Drawing No. C04-2142A

20-Lead Plastic Dual In-Line (P) – 300 mil Body [PDIP]

Note: For the most current package drawings, please see the Microchip Packaging Specification located at http://www.microchip.com/packaging

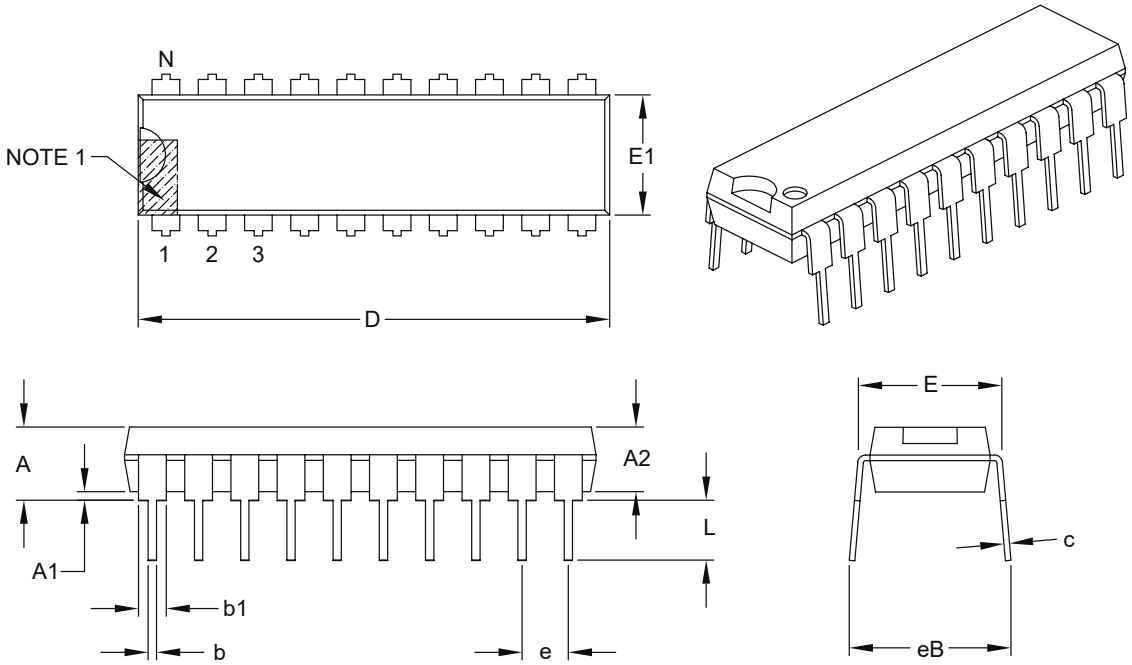

Units		INCHES		
Dimension Limits		MIN	NOM	MAX
Number of Pins	N	20		
Pitch	e	.100 BSC		
Top to Seating Plane	A	–	–	.210
Molded Package Thickness	A2	.115	.130	.195
Base to Seating Plane	A1	.015	–	–
Shoulder to Shoulder Width	E	.300	.310	.325
Molded Package Width	E1	.240	.250	.280
Overall Length	D	.980	1.030	1.060
Tip to Seating Plane	L	.115	.130	.150
Lead Thickness	c	.008	.010	.015
Upper Lead Width	b1	.045	.060	.070
Lower Lead Width	b	.014	.018	.022
Overall Row Spacing §	eB	–	–	.430

Notes:
1. Pin 1 visual index feature may vary, but must be located within the hatched area.
2. § Significant Characteristic.
3. Dimensions D and E1 do not include mold flash or protrusions. Mold flash or protrusions shall not exceed .010" per side.
4. Dimensioning and tolerancing per ASME Y14.5M.
   BSC: Basic Dimension. Theoretically exact value shown without tolerances.

Microchip Technology Drawing C04-019B

20-Lead Plastic Small Outline (SO) - Wide, 7.50 mm Body [SOIC]

Note: For the most current package drawings, please see the Microchip Packaging Specification located at http://www.microchip.com/packaging

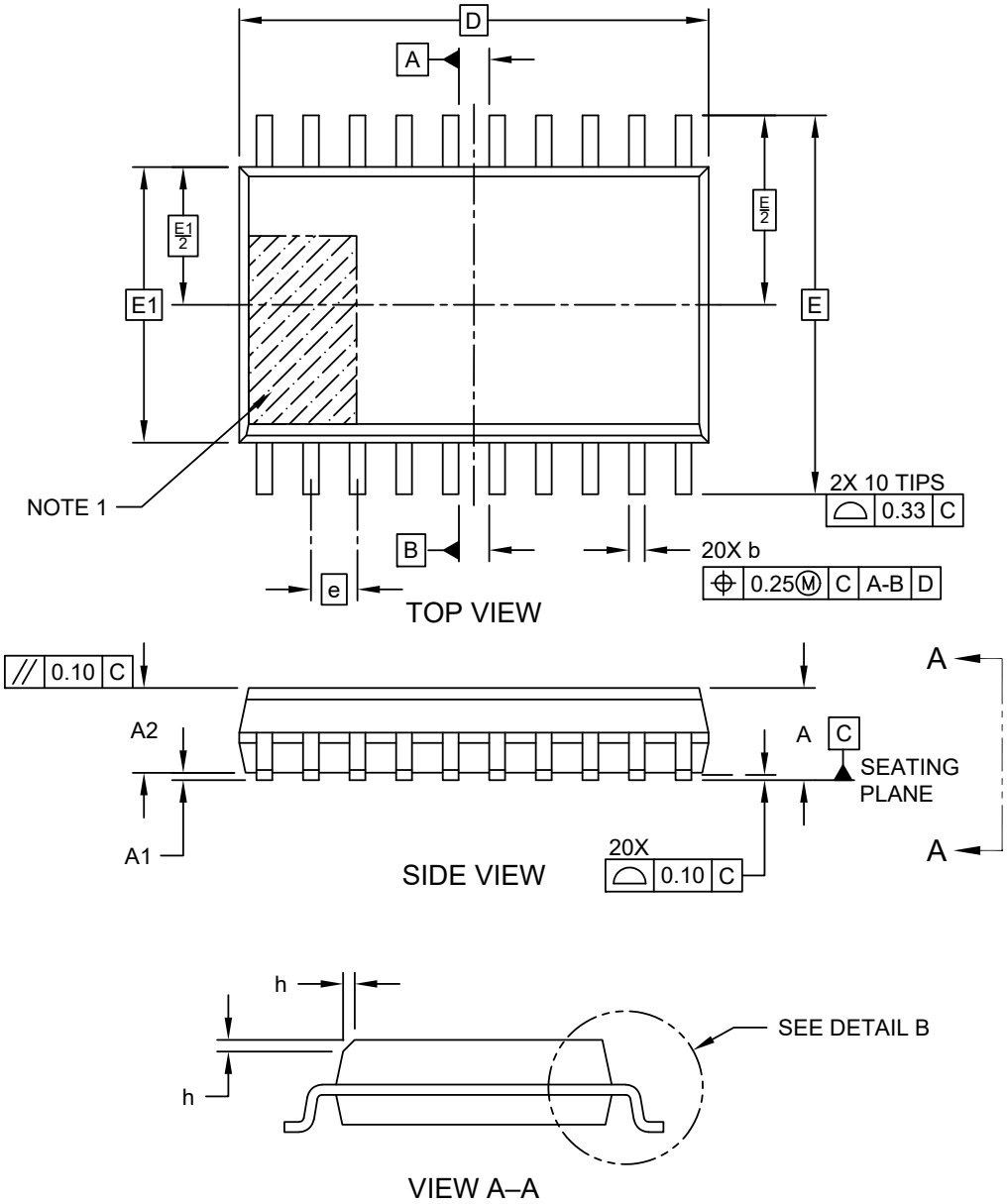

Microchip Technology Erawing C04-094 Rev E Sheet 1 of 2

20-Lead Plastic Small Outline (SO) - Wide, 7.50 mm Body [SOIC]

Note: For the most current package drawings, please see the Microchip Packaging Specification located at http://www.microchip.com/packaging

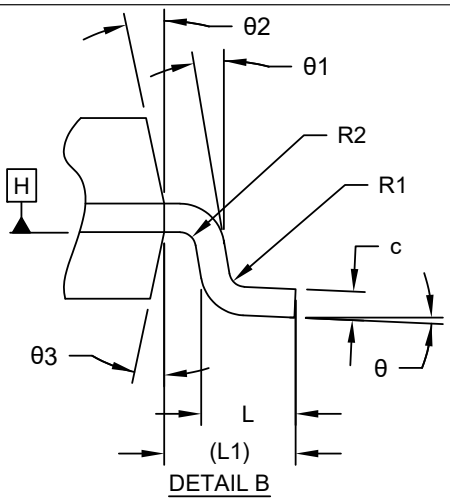

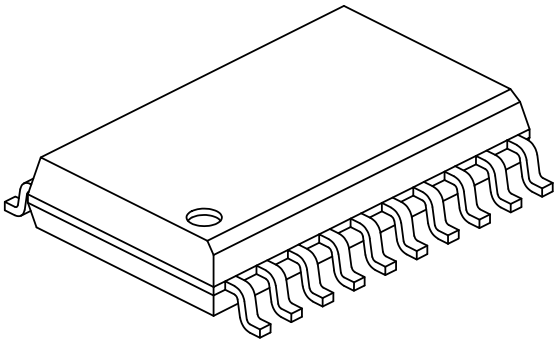

Units		MILLIMETERS		
Dimension Limits		MIN	NOM	MAX
Number of Terminals	N	20		
Pitch	e	1.27 BSC		
Overall Height	A	-	-	2.65
Standoff §	A1	0.10	-	0.30
Molded Package Thickness	A2	2.05	-	-
Overall Length	D	12.80 BSC		
Overall Width	E	10.30 BSC		
Molded Package Width	E1	7.50 BSC		
Terminal Width	b	0.31	-	0.51
Terminal Thickness	c	0.25	-	0.75
Corner Chamfer	h	0.25	-	0.75
Terminal Length	L	0.40	0.65	1.27
Footprint	L1	1.40 REF		
Lead Bend Radius	R1	0.07	-	-
Lead Bend Radius	R2	0.07	-	-
Foot Angle	θ	0°	-	8°
Lead Angle	θ1	0°	-	-
Mold Draft Angle	θ2	5°	-	15°
Mold Draft Angle	θ3	5°	-	15°

Notes:

1. Pin 1 visual index feature may vary, but must be located within the hatched area.
2. Dimensioning and tolerancing per ASME Y14.5M
   BSC: Basic Dimension. Theoretically exact value shown without tolerances.
   REF: Reference Dimension, usually without tolerance, for information purposes only.
3. Dimension D does not include mold flash, protrusions or gate burrs, which shall not exceed 0.15 mm per end. Dimension E1 does not include interlead flash or protrusion, which shall not exceed 0.25 mm per side.
4. § Significant Characteristic

Microchip Technology Erawing C04-094 Rev E Sheet 2 of 2

20-Lead Plastic Small Outline (SO) - Wide, 7.50 mm Body [SOIC]

Note: For the most current package drawings, please see the Microchip Packaging Specification located at http://www.microchip.com/packaging

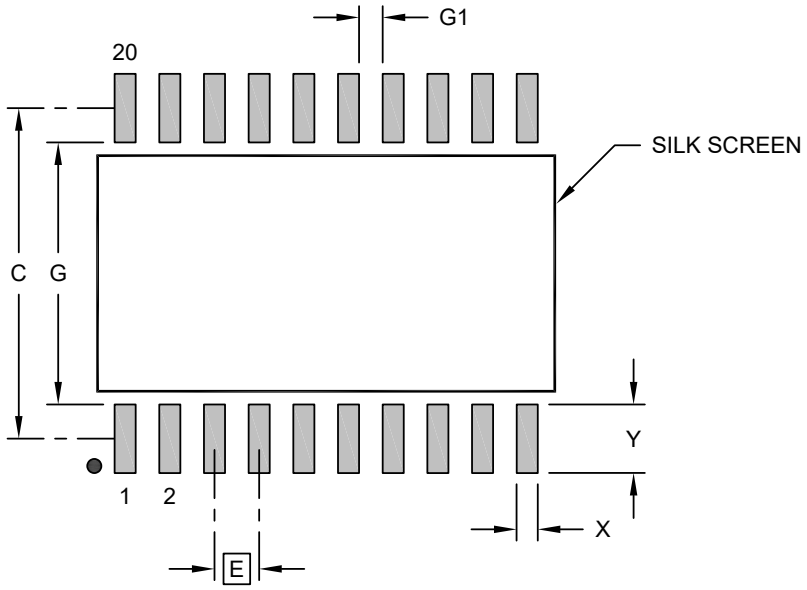

RECOMMENDED LAND PATTERN

Units		MILLIMETERS		
Dimension Limits		MIN	NOM	MAX
Contact Pitch	E	1.27 BSC		
Contact Pad Spacing	C		9.40	
Contact Pad Width (X20)	X			0.60
Contact Pad Length (X20)	Y			1.95
Contact Pad to Contact Pad	G	0.67		
Contact Pad to Contact Pad	G1	7.45		

Notes:

1. Dimensioning and tolerancing per ASME Y14.5M
   BSC: Basic Dimension. Theoretically exact value shown without tolerances.
2. For best soldering results, thermal vias, if used, should be filled or tented to avoid solder loss during reflow process

Microchip Technology Erawing C04-2094 Rev E

20-Lead Plastic Shrink Small Outline (SS) - 5.30 mm Body [SSOP]

Note: For the most current package drawings, please see the Microchip Packaging Specification located at http://www.microchip.com/packaging

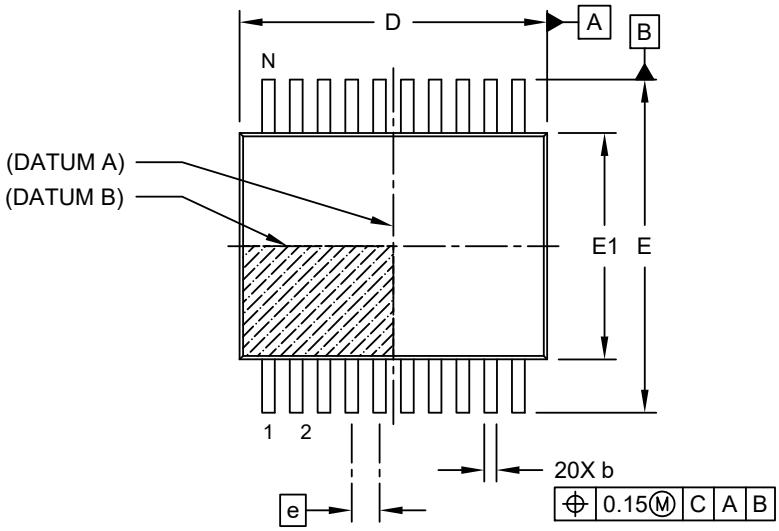

TOP VIEW

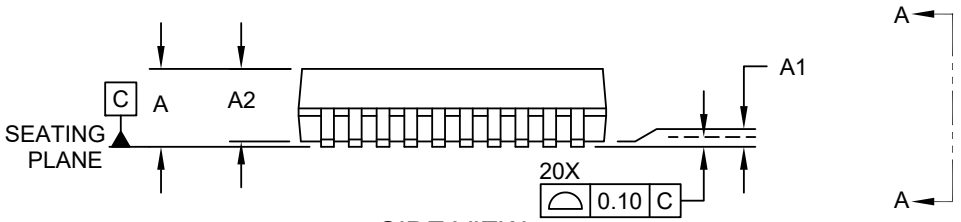

SIDE VIEW

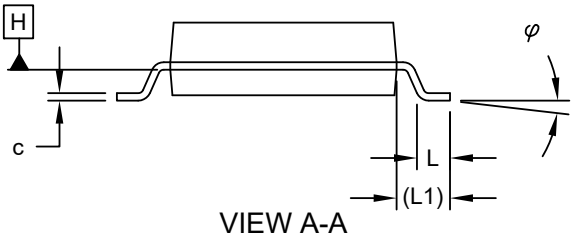

VIEW A-A

Microchip Technology Drawing C04-072 Rev C Sheet 1 of 2

20-Lead Plastic Shrink Small Outline (SS) - 5.30 mm Body [SSOP]

Note: For the most current package drawings, please see the Microchip Packaging Specification located at http://www.microchip.com/packaging

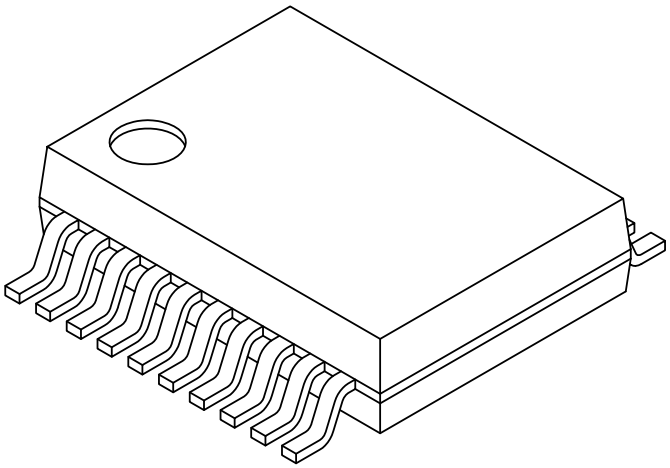

Units		MILLIMETERS		
Dimension Limits		MIN	NOM	MAX
Number of Pins	N	20		
Pitch	e	0.65 BSC		
Overall Height	A	-	-	2.00
Molded Package Thickness	A2	1.65	1.75	1.85
Standoff	A1	0.05	-	-
Overall Width	E	7.40	7.80	8.20
Molded Package Width	E1	5.00	5.30	5.60
Overall Length	D	6.90	7.20	7.50
Foot Length	L	0.55	0.75	0.95
Footprint	L1	1.25 REF		
Lead Thickness	c	0.09	-	0.25
Foot Angle	φ	0°	4°	8°
Lead Width	b	0.22	-	0.38

Notes:

1. Pin 1 visual index feature may vary, but must be located within the hatched area.
2. Dimensions D and E1 do not include mold flash or protrusions. Mold flash or protrusions shall not exceed 0.20mm per side.
3. Dimensioning and tolerancing per ASME Y14.5M
   BSC: Basic Dimension. Theoretically exact value shown without tolerances.
   REF: Reference Dimension, usually without tolerance, for information purposes only.

Microchip Technology Drawing C04-072 Rev C Sheet 2 of 2

20-Lead Plastic Shrink Small Outline (SS) - 5.30 mm Body [SSOP]

Note: For the most current package drawings, please see the Microchip Packaging Specification located at http://www.microchip.com/packaging

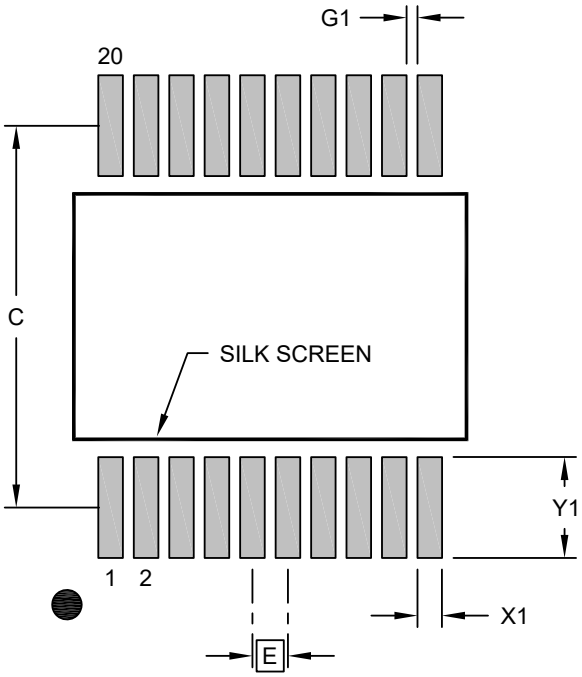

RECOMMENDED LAND PATTERN

Units		MILLIMETERS		
Dimension Limits		MIN	NOM	MAX
Contact Pitch	E		0.65 BSC	
Contact Pad Spacing	C		7.00	
Contact Pad Width (X20)	X1			0.45
Contact Pad Length (X20)	Y1			1.85
Contact Pad to Center Pad (X18)	G1	0.20		

Notes:

1. Dimensioning and tolerancing per ASME Y14.5M
   BSC: Basic Dimension. Theoretically exact value shown without tolerances.
2. For best soldering results, thermal vias, if used, should be filled or tented to avoid solder loss during reflow process

Microchip Technology Drawing C04-2072 Rev C

20-Lead Very Thin Plastic Quad Flat, No Lead Package (REB) - 3x3 mm Body [VQFN] With 1.7 mm Exposed Pad; Atmel Legacy Global Package Code ZCL

Note: For the most current package drawings, please see the Microchip Packaging Specification located at http://www.microchip.com/packaging

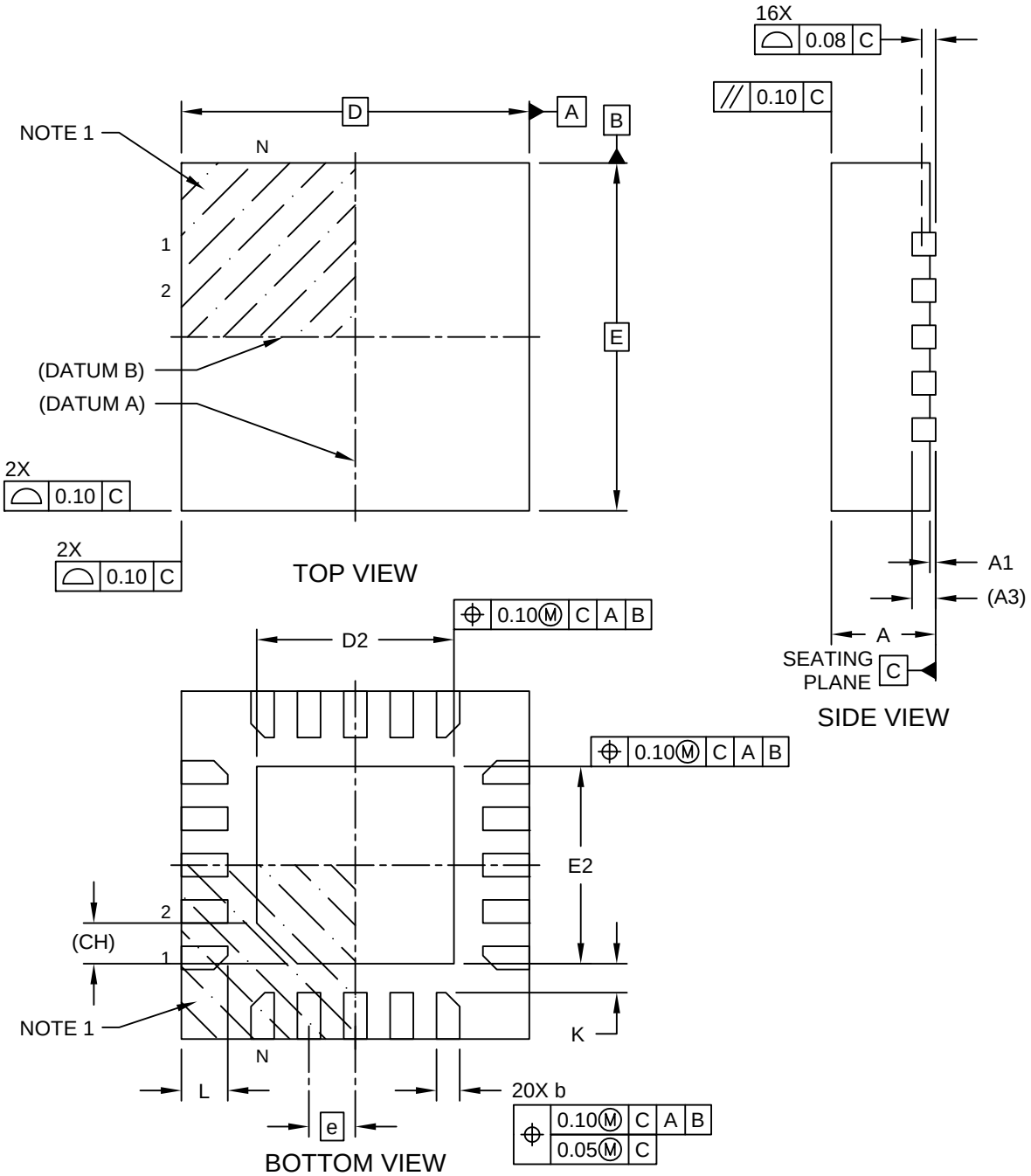

Microchip Technology Drawing C04-21380 Rev A Sheet 1 of 2

20-Lead Very Thin Plastic Quad Flat, No Lead Package (REB) - 3x3 mm Body [VQFN] With 1.7 mm Exposed Pad; Atmel Legacy Global Package Code ZCL

Note: For the most current package drawings, please see the Microchip Packaging Specification located at http://www.microchip.com/packaging

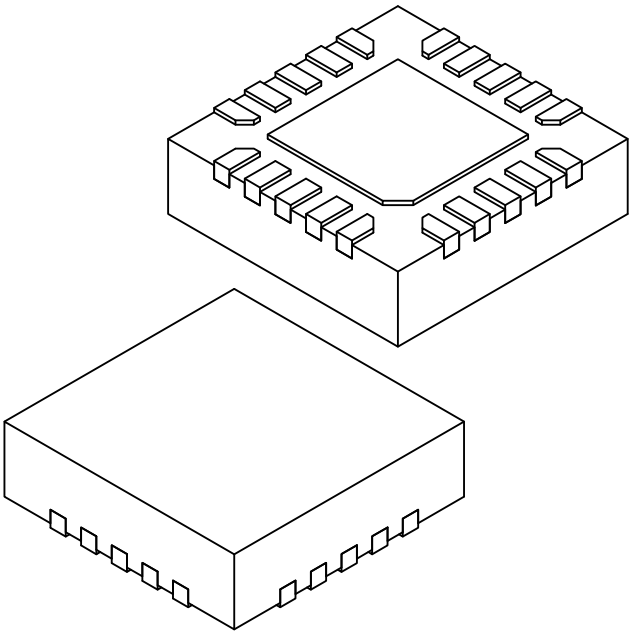

Units		MILLIMETERS		
Dimension Limits		MIN	NOM	MAX
Number of Terminals	N	20		
Pitch	e	0.40 BSC		
Overall Height	A	0.80	0.85	0.90
Standoff	A1	0.00	0.035	0.05
Terminal Thickness	A3	0.203 REF		
Overall Length	D	3.00 BSC		
Exposed Pad Length	D2	1.60	1.70	1.80
Overall Width	E	3.00 BSC		
Exposed Pad Width	E2	1.60	1.70	1.80
Terminal Width	b	0.15	0.20	0.25
Terminal Length	L	0.35	0.40	0.45
Terminal-to-Exposed-Pad	K	0.20	-	-
Pin 1 Index Chamfer	CH	0.35 REF		

Notes:

1. Pin 1 visual index feature may vary, but must be located within the hatched area.
2. Package is saw singulated
3. Dimensioning and tolerancing per ASME Y14.5M
   BSC: Basic Dimension. Theoretically exact value shown without tolerances.
   REF: Reference Dimension, usually without tolerance, for information purposes only.

Microchip Technology Drawing C04-21380 Rev A Sheet 2 of 2

20-Lead Very Thin Plastic Quad Flat, No Lead Package (REB) - 3x3 mm Body [VQFN] With 1.7 mm Exposed Pad; Atmel Legacy Global Package Code ZCL

Note: For the most current package drawings, please see the Microchip Packaging Specification located at http://www.microchip.com/packaging

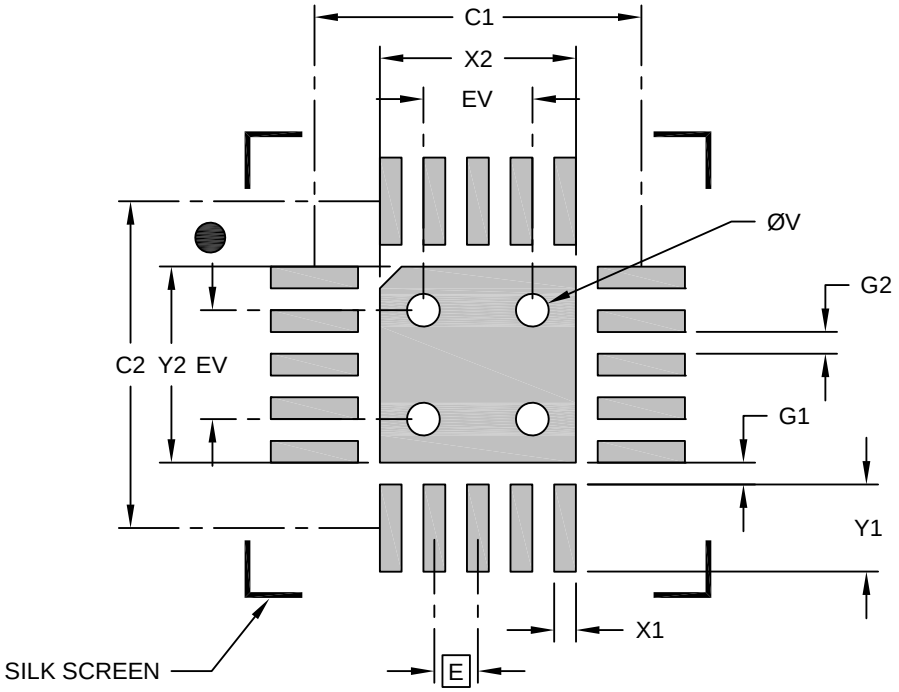

RECOMMENDED LAND PATTERN

Units		MILLIMETERS		
Dimension Limits		MIN	NOM	MAX
Contact Pitch	E		0.40 BSC	
Optional Center Pad Width	X2			1.80
Optional Center Pad Length	Y2			1.80
Contact Pad Spacing	C1		3.00	
Contact Pad Spacing	C2		3.00	
Contact Pad Width (X20)	X1			0.20
Contact Pad Length (X20)	Y1			0.80
Contact Pad to Center Pad (X20)	G1	0.20		
Contact Pad to Contact Pad (X16)	G2	0.20		
Thermal Via Diameter	V		0.30	
Thermal Via Pitch	EV		1.00	

Notes:

1. Dimensioning and tolerancing per ASME Y14.5M
   BSC: Basic Dimension. Theoretically exact value shown without tolerances.
2. For best soldering results, thermal vias, if used, should be filled or tented to avoid solder loss during reflow process

Microchip Technology Drawing C04-23380 Rev A

35. Appendix A: Revision History

Doc Rev.	Date	Comments
D	5/2022	Corrections to ADC CHS selection table; Correction to CONFIG1 RSTOSC and FEXTOSC Reset values; MSSP register updates; other minor corrections.
C	9/2021	Updated Electrical Specifications and added characterization graphs.
B	7/2020	Updated PWM block diagram; Updated I/O Ports registers; Updated Configuration Word 1 register in cpu chapter; Updated Memory Banks information; Other minor corrections.
A	4/2020	Initial document release.

© 2020-2022 Microchip Technology Inc.
and its subsidiaries

The Microchip Website

Microchip provides online support via our website at www.microchip.com/. This website is used to make files and information easily available to customers. Some of the content available includes:

- **Product Support** – Data sheets and errata, application notes and sample programs, design resources, user's guides and hardware support documents, latest software releases and archived software
- **General Technical Support** – Frequently Asked Questions (FAQs), technical support requests, online discussion groups, Microchip design partner program member listing
- **Business of Microchip** – Product selector and ordering guides, latest Microchip press releases, listing of seminars and events, listings of Microchip sales offices, distributors and factory representatives

Product Change Notification Service

Microchip's product change notification service helps keep customers current on Microchip products. Subscribers will receive email notification whenever there are changes, updates, revisions or errata related to a specified product family or development tool of interest.

To register, go to www.microchip.com/pcn and follow the registration instructions.

Customer Support

Users of Microchip products can receive assistance through several channels:

- Distributor or Representative
- Local Sales Office
- Embedded Solutions Engineer (ESE)
- Technical Support

Customers should contact their distributor, representative or ESE for support. Local sales offices are also available to help customers. A listing of sales offices and locations is included in this document.

Technical support is available through the website at: www.microchip.com/support

© 2020-2022 Microchip Technology Inc.
and its subsidiaries

Product Identification System

To order or obtain information, e.g., on pricing or delivery, refer to the factory or the listed sales office.

PART NO. [X](1) –X /XX

Device | Tape and Reel | Temperature Range | Package

Device:	PIC16F15213, PIC16F15214, PIC16F15223, PIC16F15224, PIC16F15243, PIC16F15244	
Tape & Reel Option:	Blank	= Tube
	T	= Tape & Reel
Temperature Range:	I	= -40°C to +85°C (Industrial)
	E	= -40°C to +125°C (Extended)
Package:	P	= 8-lead PDIP
	SN	= 8-lead SOIC
	MF	= 8-lead DFN
	P	= 14-lead PDIP
	SL	= 14-lead SOIC
	ST	= 14-lead TSSOP
	MG	= 16-lead QFN
	P	= 20-lead PDIP
	SO	= 20-lead SOIC
	SS	= 20-lead SSOP
	REB	= 20-lead VQFN

Examples:

- PIC16F15213 T-E/P: Tape and Reel, Extended temperature, 8-lead PDIP
- PIC16F15244 T-I/SS: Tape and Reel, Industrial temperature, 20-lead SSOP

Notes:

1. Tape and Reel identifier only appears in the catalog part number description. This identifier is used for ordering purposes and is not printed on the device package. Check with your Microchip Sales Office for package availability with the Tape and Reel option.
2. Small form-factor packaging options may be available. Please check www.microchip.com/packaging for small-form factor package availability, or contact your local Sales Office.

Microchip Devices Code Protection Feature

Note the following details of the code protection feature on Microchip products:

- Microchip products meet the specifications contained in their particular Microchip Data Sheet.
- Microchip believes that its family of products is secure when used in the intended manner, within operating specifications, and under normal conditions.
- Microchip values and aggressively protects its intellectual property rights. Attempts to breach the code protection features of Microchip product is strictly prohibited and may violate the Digital Millennium Copyright Act.

- Neither Microchip nor any other semiconductor manufacturer can guarantee the security of its code. Code protection does not mean that we are guaranteeing the product is “unbreakable”. Code protection is constantly evolving. Microchip is committed to continuously improving the code protection features of our products.

Legal Notice

This publication and the information herein may be used only with Microchip products, including to design, test, and integrate Microchip products with your application. Use of this information in any other manner violates these terms. Information regarding device applications is provided only for your convenience and may be superseded by updates. It is your responsibility to ensure that your application meets with your specifications. Contact your local Microchip sales office for additional support or, obtain additional support at www.microchip.com/en-us/support/design-help/client-support-services.

THIS INFORMATION IS PROVIDED BY MICROCHIP "AS IS". MICROCHIP MAKES NO REPRESENTATIONS OR WARRANTIES OF ANY KIND WHETHER EXPRESS OR IMPLIED, WRITTEN OR ORAL, STATUTORY OR OTHERWISE, RELATED TO THE INFORMATION INCLUDING BUT NOT LIMITED TO ANY IMPLIED WARRANTIES OF NON-INFRINGEMENT, MERCHANTABILITY, AND FITNESS FOR A PARTICULAR PURPOSE, OR WARRANTIES RELATED TO ITS CONDITION, QUALITY, OR PERFORMANCE.

IN NO EVENT WILL MICROCHIP BE LIABLE FOR ANY INDIRECT, SPECIAL, PUNITIVE, INCIDENTAL, OR CONSEQUENTIAL LOSS, DAMAGE, COST, OR EXPENSE OF ANY KIND WHATSOEVER RELATED TO THE INFORMATION OR ITS USE, HOWEVER CAUSED, EVEN IF MICROCHIP HAS BEEN ADVISED OF THE POSSIBILITY OR THE DAMAGES ARE FORESEEABLE. TO THE FULLEST EXTENT ALLOWED BY LAW, MICROCHIP'S TOTAL LIABILITY ON ALL CLAIMS IN ANY WAY RELATED TO THE INFORMATION OR ITS USE WILL NOT EXCEED THE AMOUNT OF FEES, IF ANY, THAT YOU HAVE PAID DIRECTLY TO MICROCHIP FOR THE INFORMATION.

Use of Microchip devices in life support and/or safety applications is entirely at the buyer's risk, and the buyer agrees to defend, indemnify and hold harmless Microchip from any and all damages, claims, suits, or expenses resulting from such use. No licenses are conveyed, implicitly or otherwise, under any Microchip intellectual property rights unless otherwise stated.

Trademarks

The Microchip name and logo, the Microchip logo, Adaptec, AnyRate, AVR, AVR logo, AVR Freaks, BesTime, BitCloud, CryptoMemory, CryptoRF, dsPIC, flexPWR, HELDO, IGLOO, JukeBlox, KeeLoq, Kleer, LANCheck, LinkMD, maXStylus, maXTouch, MediaLB, megaAVR, Microsemi, Microsemi logo, MOST, MOST logo, MPLAB, OptoLyzer, PIC, picoPower, PICSTART, PIC32 logo, PolarFire, Prochip Designer, QTouch, SAM-BA, SenGenuity, SpyNIC, SST, SST Logo, SuperFlash, Symmetricom, SyncServer, Tachyon, TimeSource, tinyAVR, UNI/O, Vectron, and XMEGA are registered trademarks of Microchip Technology Incorporated in the U.S.A. and other countries.

AgileSwitch, APT, ClockWorks, The Embedded Control Solutions Company, EtherSynch, Flashtec, Hyper Speed Control, HyperLight Load, IntelliMOS, Libero, motorBench, mTouch, Powermite 3, Precision Edge, ProASIC, ProASIC Plus, ProASIC Plus logo, Quiet- Wire, SmartFusion, SyncWorld, Temux, TimeCesium, TimeHub, TimePictra, TimeProvider, TrueTime, WinPath, and ZL are registered trademarks of Microchip Technology Incorporated in the U.S.A.

Adjacent Key Suppression, AKS, Analog-for-the-Digital Age, Any Capacitor, AnyIn, AnyOut, Augmented Switching, BlueSky, BodyCom, CodeGuard, CryptoAuthentication, CryptoAutomotive, CryptoCompanion, CryptoController, dsPICDEM, dsPICDEM.net, Dynamic Average Matching, DAM, ECAN, Espresso T1S, EtherGREEN, GridTime, IdealBridge, In-Circuit Serial Programming, ICSP, INICnet, Intelligent Paralleling, Inter-Chip Connectivity, JitterBlocker, Knob-on-Display, maxCrypto, maxView, memBrain, Mindi, MiWi, MPASM, MPF, MPLAB Certified logo, MPLIB, MPLINK, MultiTRAK, NetDetach, NVM Express, NVMe, Omniscient Code Generation, PICDEM, PICDEM.net, PICkit, PICtail, PowerSmart, PureSilicon, QMatrix, REAL ICE, Ripple Blocker, RTAX, RTG4, SAM-ICE, Serial Quad I/O, simpleMAP, SimpliPHY, SmartBuffer, SmartHLS, SMART-I.S., storClad, SQI, SuperSwitcher, SuperSwitcher II, Switchtec, SynchroPHY, Total Endurance, TSHARC, USBCheck, VariSense, VectorBlox, VeriPHY, ViewSpan, WiperLock, XpressConnect, and ZENA are trademarks of Microchip Technology Incorporated in the U.S.A. and other countries.

SQTP is a service mark of Microchip Technology Incorporated in the U.S.A.

The Adaptec logo, Frequency on Demand, Silicon Storage Technology, Symmcom, and Trusted Time are registered trademarks of Microchip Technology Inc. in other countries.

GestIC is a registered trademark of Microchip Technology Germany II GmbH & Co. KG, a subsidiary of Microchip Technology Inc., in other countries.

All other trademarks mentioned herein are property of their respective companies.

© 2020-2022, Microchip Technology Incorporated and its subsidiaries. All Rights Reserved.

ISBN: 978-1-6683-0336-8

Quality Management System

For information regarding Microchip's Quality Management Systems, please visit www.microchip.com/quality.

Worldwide Sales and Service

AMERICAS	ASIA/PACIFIC	ASIA/PACIFIC	EUROPE
Corporate Office 2355 West Chandler Blvd. Chandler, AZ 85224-6199 Tel: 480-792-7200 Fax: 480-792-7277 Technical Support: www.microchip.com/support Web Address: www.microchip.com **Atlanta** Duluth, GA Tel: 678-957-9614 Fax: 678-957-1455 **Austin, TX** Tel: 512-257-3370 **Boston** Westborough, MA Tel: 774-760-0087 Fax: 774-760-0088 **Chicago** Itasca, IL Tel: 630-285-0071 Fax: 630-285-0075 **Dallas** Addison, TX Tel: 972-818-7423 Fax: 972-818-2924 **Detroit** Novi, MI Tel: 248-848-4000 **Houston, TX** Tel: 281-894-5983 **Indianapolis** Noblesville, IN Tel: 317-773-8323 Fax: 317-773-5453 Tel: 317-536-2380 **Los Angeles** Mission Viejo, CA Tel: 949-462-9523 Fax: 949-462-9608 Tel: 951-273-7800 **Raleigh, NC** Tel: 919-844-7510 **New York, NY** Tel: 631-435-6000 **San Jose, CA** Tel: 408-735-9110 Tel: 408-436-4270 **Canada - Toronto** Tel: 905-695-1980 Fax: 905-695-2078	**Australia - Sydney** Tel: 61-2-9868-6733 **China - Beijing** Tel: 86-10-8569-7000 **China - Chengdu** Tel: 86-28-8665-5511 **China - Chongqing** Tel: 86-23-8980-9588 **China - Dongguan** Tel: 86-769-8702-9880 **China - Guangzhou** Tel: 86-20-8755-8029 **China - Hangzhou** Tel: 86-571-8792-8115 **China - Hong Kong SAR** Tel: 852-2943-5100 **China - Nanjing** Tel: 86-25-8473-2460 **China - Qingdao** Tel: 86-532-8502-7355 **China - Shanghai** Tel: 86-21-3326-8000 **China - Shenyang** Tel: 86-24-2334-2829 **China - Shenzhen** Tel: 86-755-8864-2200 **China - Suzhou** Tel: 86-186-6233-1526 **China - Wuhan** Tel: 86-27-5980-5300 **China - Xian** Tel: 86-29-8833-7252 **China - Xiamen** Tel: 86-592-2388138 **China - Zhuhai** Tel: 86-756-3210040	**India - Bangalore** Tel: 91-80-3090-4444 **India - New Delhi** Tel: 91-11-4160-8631 **India - Pune** Tel: 91-20-4121-0141 **Japan - Osaka** Tel: 81-6-6152-7160 **Japan - Tokyo** Tel: 81-3-6880- 3770 **Korea - Daegu** Tel: 82-53-744-4301 **Korea - Seoul** Tel: 82-2-554-7200 **Malaysia - Kuala Lumpur** Tel: 60-3-7651-7906 **Malaysia - Penang** Tel: 60-4-227-8870 **Philippines - Manila** Tel: 63-2-634-9065 **Singapore** Tel: 65-6334-8870 **Taiwan - Hsin Chu** Tel: 886-3-577-8366 **Taiwan - Kaohsiung** Tel: 886-7-213-7830 **Taiwan - Taipei** Tel: 886-2-2508-8600 **Thailand - Bangkok** Tel: 66-2-694-1351 **Vietnam - Ho Chi Minh** Tel: 84-28-5448-2100	**Austria - Wels** Tel: 43-7242-2244-39 Fax: 43-7242-2244-393 **Denmark - Copenhagen** Tel: 45-4485-5910 Fax: 45-4485-2829 **Finland - Espoo** Tel: 358-9-4520-820 **France - Paris** Tel: 33-1-69-53-63-20 Fax: 33-1-69-30-90-79 **Germany - Garching** Tel: 49-8931-9700 **Germany - Haan** Tel: 49-2129-3766400 **Germany - Heilbronn** Tel: 49-7131-72400 **Germany - Karlsruhe** Tel: 49-721-625370 **Germany - Munich** Tel: 49-89-627-144-0 Fax: 49-89-627-144-44 **Germany - Rosenheim** Tel: 49-8031-354-560 **Israel - Ra'anana** Tel: 972-9-744-7705 **Italy - Milan** Tel: 39-0331-742611 Fax: 39-0331-466781 **Italy - Padova** Tel: 39-049-7625286 **Netherlands - Drunen** Tel: 31-416-690399 Fax: 31-416-690340 **Norway - Trondheim** Tel: 47-72884388 **Poland - Warsaw** Tel: 48-22-3325737 **Romania - Bucharest** Tel: 40-21-407-87-50 **Spain - Madrid** Tel: 34-91-708-08-90 Fax: 34-91-708-08-91 **Sweden - Gothenberg** Tel: 46-31-704-60-40 **Sweden - Stockholm** Tel: 46-8-5090-4654 **UK - Wokingham** Tel: 44-118-921-5800 Fax: 44-118-921-5820

© 2020-2022 Microchip Technology Inc.
and its subsidiaries