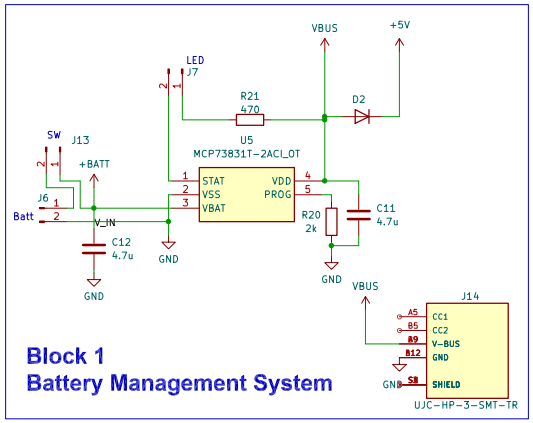
Block 1
Battery Management System
VBUS
+5V
LED
J7
R21
470
D2
U5
MCP73831T-2ACI_OT
STAT
VSS
VBAT
VDD
PROG
SW
J13
+BATT
J6
Batt
V_IN
C12
4.7u
GND
R20
2k
C11
4.7u
J14
CC1
CC2
V-BUS
GND
SHIELD
UJC-HP-3-SMT-TR

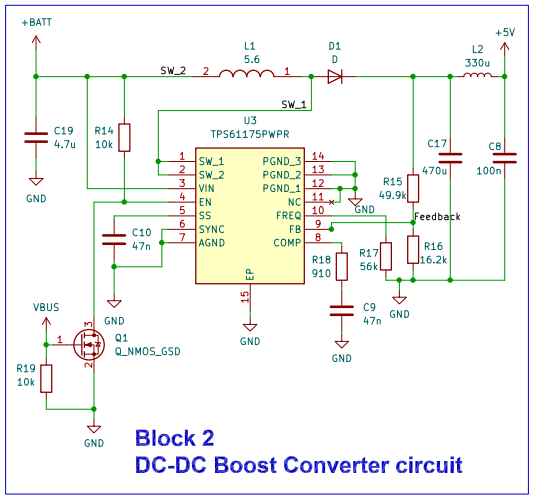
Block 2
DC-DC Boost Converter circuit
+BATT
L1
5.6
D1
D
L2
330u
+5V
SW_2
SW_1
U3
TPS61175PWPR
SW_1
SW_2
VIN
EN
SS
SYNC
AGND
PGND_3
PGND_2
PGND_1
NC
FREQ
FB
COMP
EP
C19
4.7u
R14
10k
C17
470u
C8
100n
R15
49.9k
Feedback
C10
47n
R17
56k
R16
16.2k
R18
910
C9
47n
GND
VBUS
Q1
Q_NMOS_GSD
R19
10k

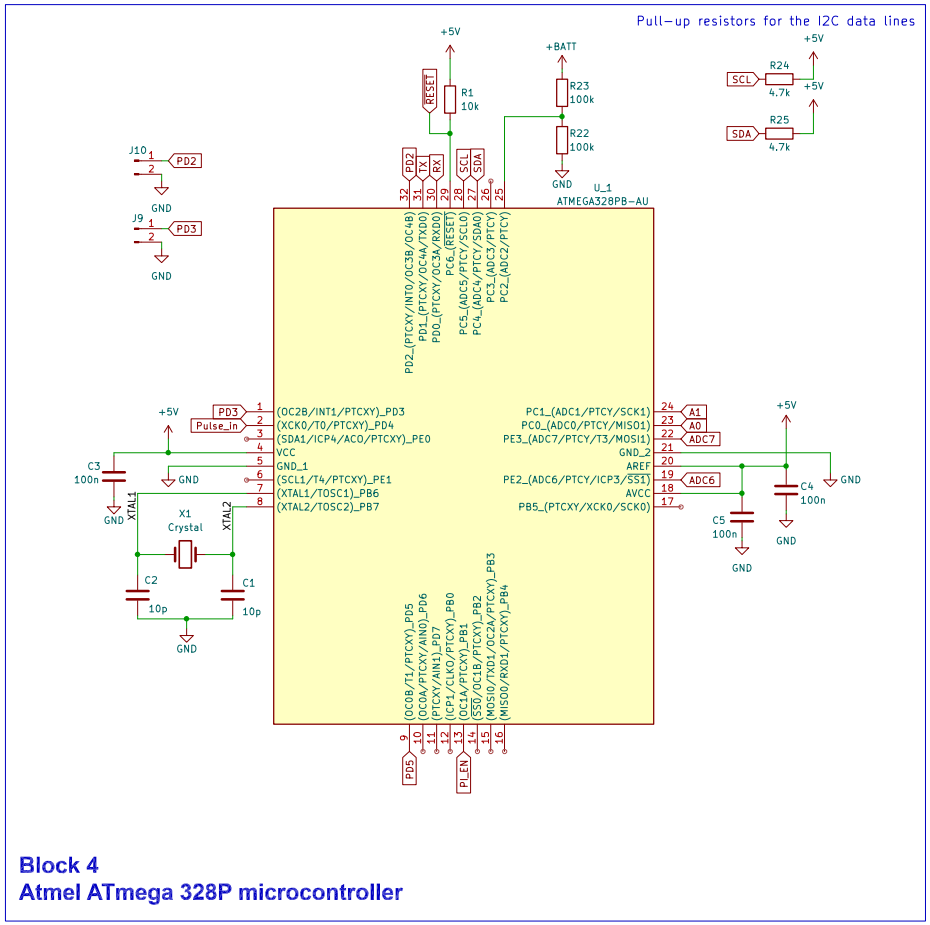
Pull-up resistors for the I2C data lines
+5V
RESET
R1
10k
+BATT
R23
100k
R22
100k
R24
4.7k
R25
4.7k
SCL
SDA
J10
PD2
J9
PD3
U_1
ATMEGA328PB-AU
PD2_(PTCXY/INT0/OC3B/OC4B)
PD1_(PTCXY/OC4A/TXD0)
PD0_(PTCXY/OC3A/RXD0)
PC6_(RESET)
PC5_(ADC5/PTCY/SCL0)
PC4_(ADC4/PTCY/SDA0)
PC3_(ADC3/PTCY)
PC2_(ADC2/PTCY)
(OC2B/INT1/PTCXY)_PD3
(XCK0/T0/PTCXY)_PD4
(SDA1/ICP4/ACO/PTCXY)_PE0
VCC
GND_1
(SCL1/T4/PTCXY)_PE1
(XTAL1/TOSC1)_PB6
(XTAL2/TOSC2)_PB7
PC1_(ADC1/PTCY/SCK1)
PC0_(ADC0/PTCY/MISO1)
PE3_(ADC7/PTCY/T3/MOSI1)
GND_2
AREF
PE2_(ADC6/PTCY/ICP3/SS1)
AVCC
PB5_(PTCXY/XCK0/SCK0)
A1
A0
ADC7
ADC6
Pulse_In
C3
100n
XTAL1
XTAL2
X1
Crystal
C2
10p
C1
10p
C5
100n
C4
100n
(OC0B/T1/PTCXY)_PD5
(OC0A/PTCXY/AIN0)_PD6
(PTCXY/AIN1)_PD7
(ICP1/CLKO/PTCXY)_PB0
(OC1A/PTCXY)_PB1
(SS0/OC1B/PTCXY)_PB2
(MOSI0/TXD1/OC2A/PTCXY)_PB3
(MISO0/RXD1/PTCXY)_PB4
PD5
PL_EN

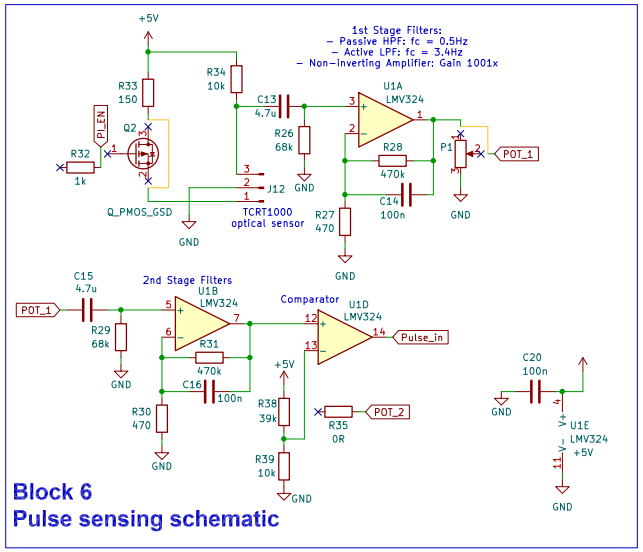
Block 6
Pulse sensing schematic
+5V
1st Stage Filters:
- Passive HPF: fc = 0.5Hz
- Active LPF: fc = 3.4Hz
- Non-inverting Amplifier: Gain 1001x
R33
150
R34
10k
C13
4.7u
U1A
LMV324
PL_EN
Q2
R32
1k
Q_PMOS_GSD
R26
68k
R28
470k
P1
POT_1
J12
TCRT1000
optical sensor
C14
100n
R27
470
GND
C15
4.7u
2nd Stage Filters
U1B
LMV324
Comparator
U1D
LMV324
R29
68k
R31
470k
C16
100n
R30
470
R38
39k
R35
0R
POT_2
R39
10k
C20
100n
U1E
LMV324

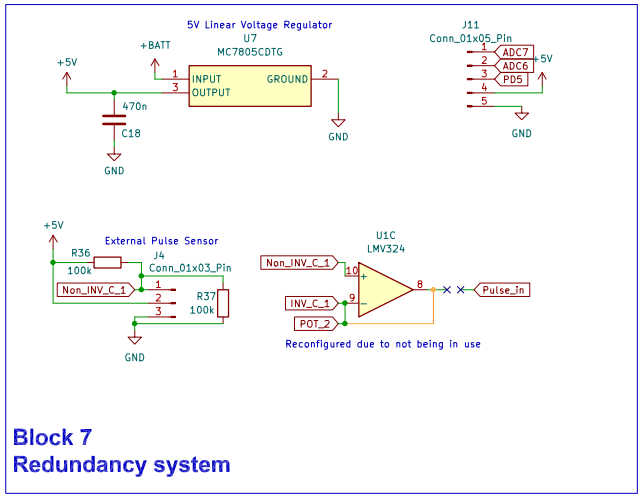
Block 7
Redundancy system
5V Linear Voltage Regulator
U7
MC7805CDTG
+BATT
+5V
INPUT
OUTPUT
GROUND
470n
C18
J11
Conn_01x05_Pin
ADC7
ADC6
PD5
External Pulse Sensor
R36
100k
J4
Conn_01x03_Pin
Non_INV_C_1
R37
100k
U1C
LMV324
INV_C_1
POT_2
Pulse_In
Reconfigured due to not being in use

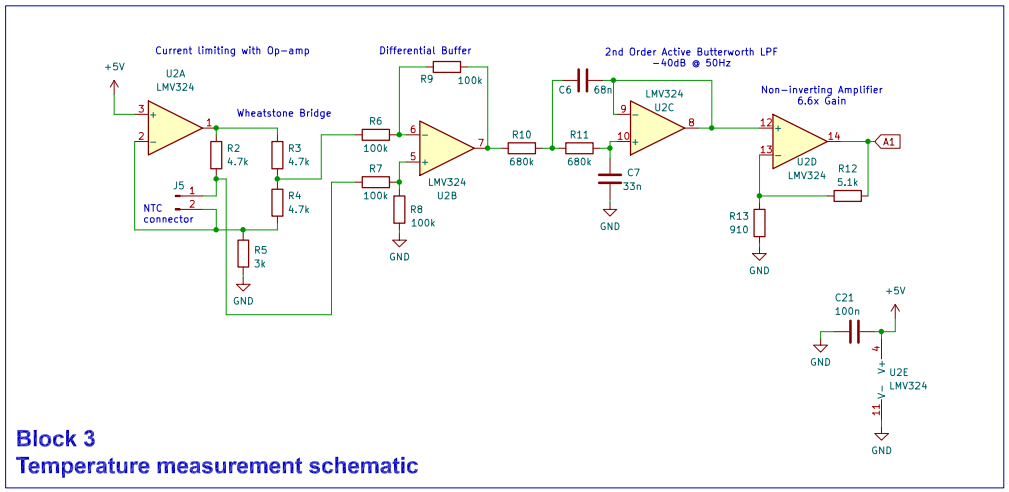
Block 3
Temperature measurement schematic
Current limiting with Op-amp
U2A
LMV324
Wheatstone Bridge
R2
4.7k
R3
4.7k
R4
4.7k
R5
3k
J5
NTC
connector
Differential Buffer
R9
100k
R6
100k
R7
100k
R8
100k
U2B
LMV324
2nd Order Active Butterworth LPF
-40dB @ 50Hz
C6
68n
R10
680k
R11
680k
C7
33n
U2C
LMV324
Non-inverting Amplifier
6.6x Gain
U2D
LMV324
R12
5.1k
R13
910
A1
C21
100n
U2E
LMV324

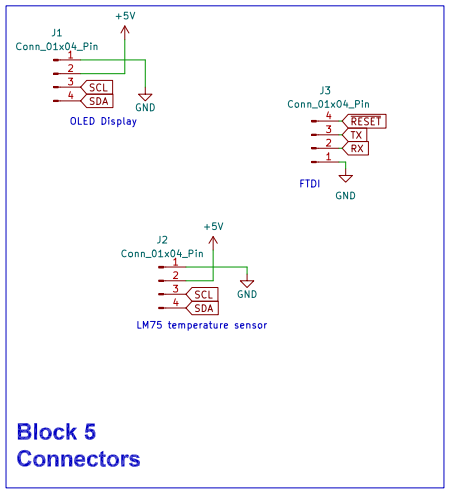
Block 5
Connectors
J1
Conn_01x04_Pin
SCL
SDA
OLED Display
J3
Conn_01x04_Pin
RESET
TX
RX
FTDI
J2
Conn_01x04_Pin
LM75 temperature sensor