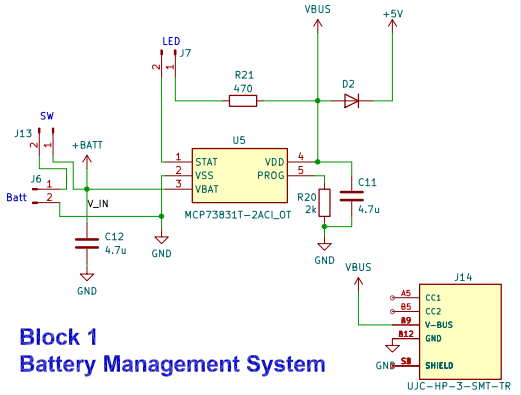

Block 1
Battery Management System

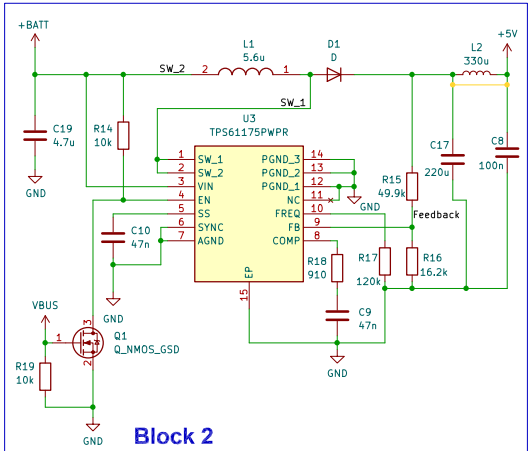

Block 2
DC-DC Boost Converter circuit

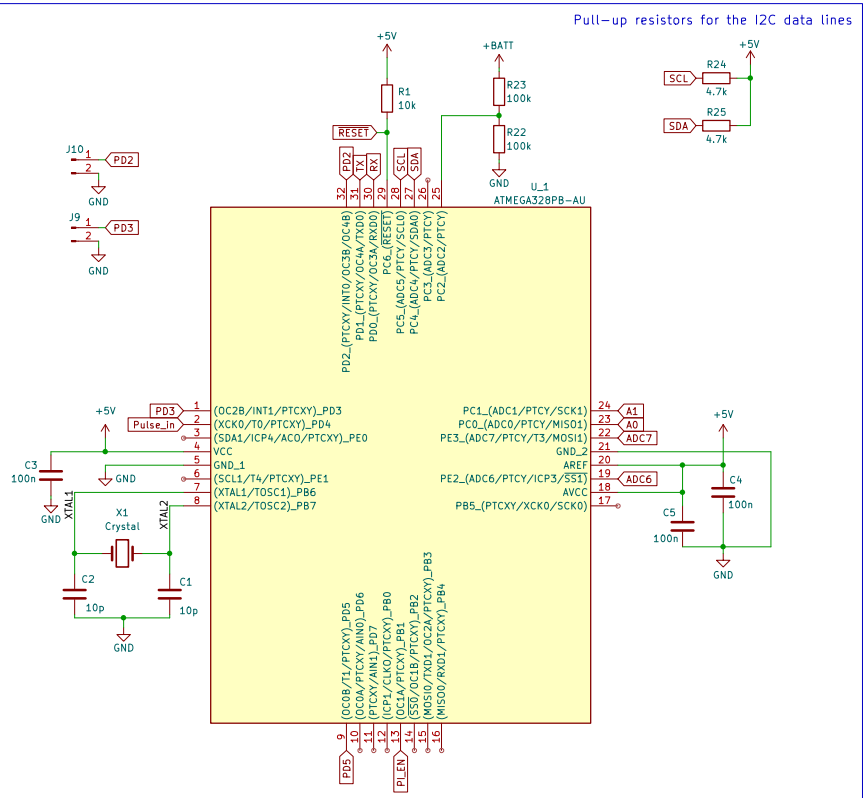

Block 4
Atmel ATmega 328P microcontroller

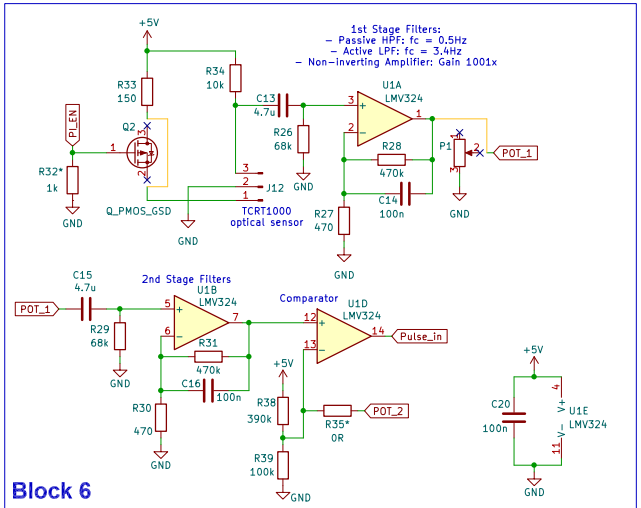

Block 6
Pulse sensing schematic

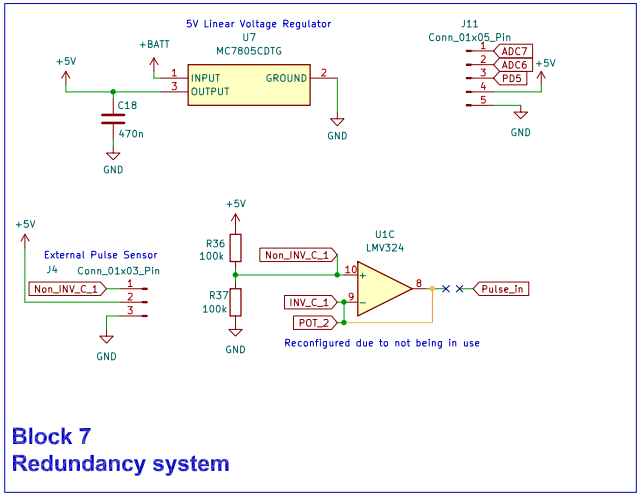

Block 7
Redundancy system

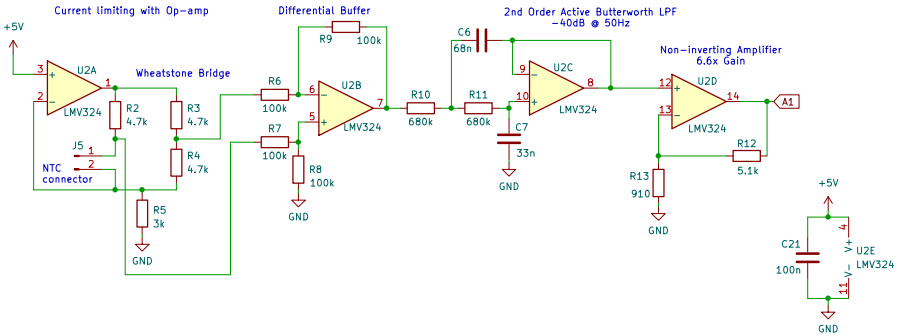

Block 3
Temperature measurement schematic

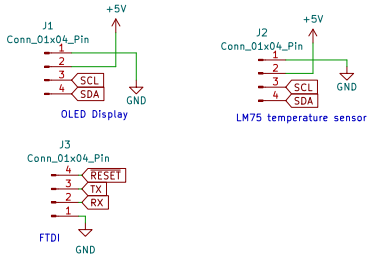

Block 5
Connectors