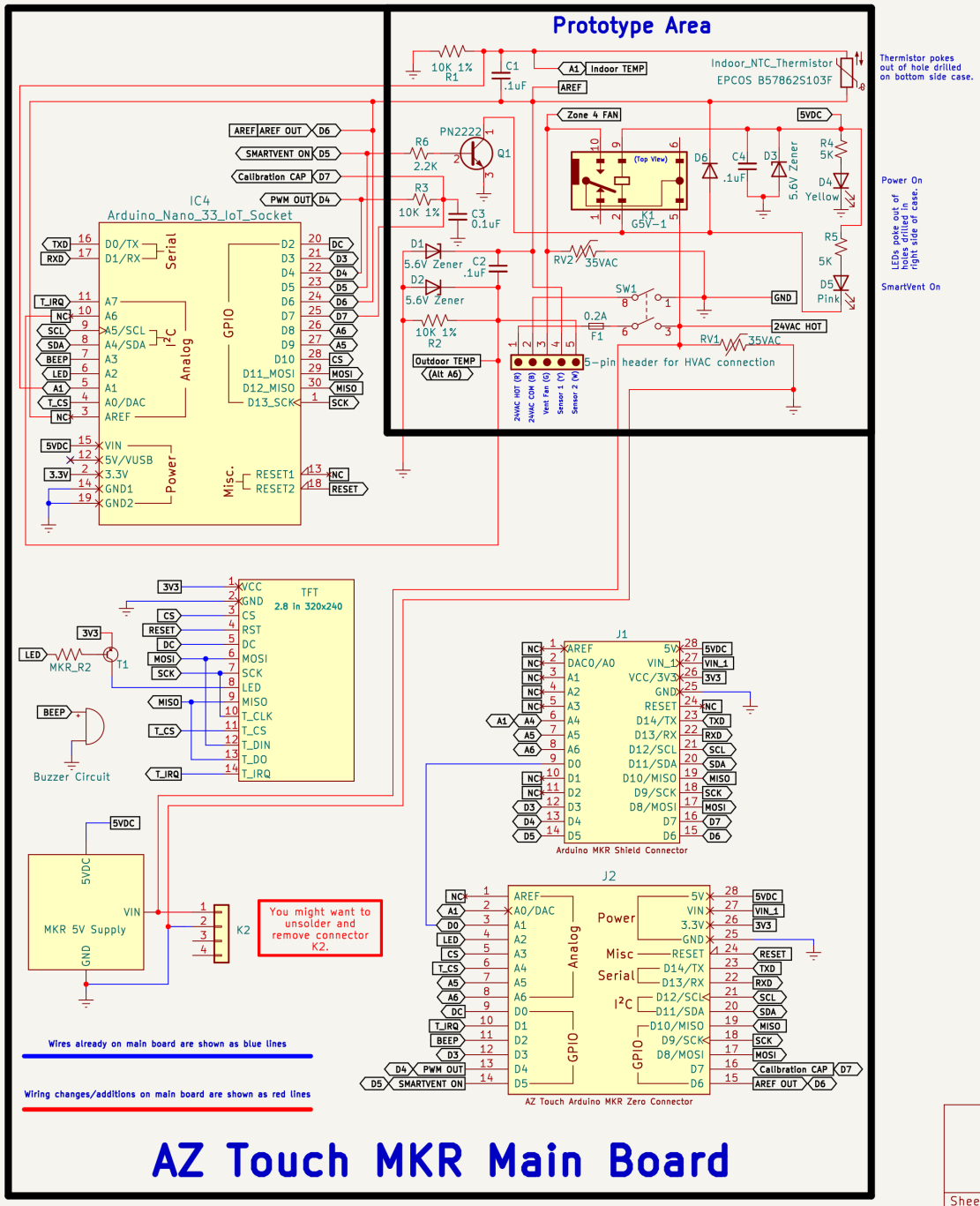

Sheet:
File: SmartVent Thermostat Schematic V4.kicad_sch

Title: SmartVent Thermostat Prototype Area and Main Board Mods

Size: User	Date: 19-June-2023	Rev: 4
KiCad E.D.A. kicad 7.0.1-0		Id: 1/1