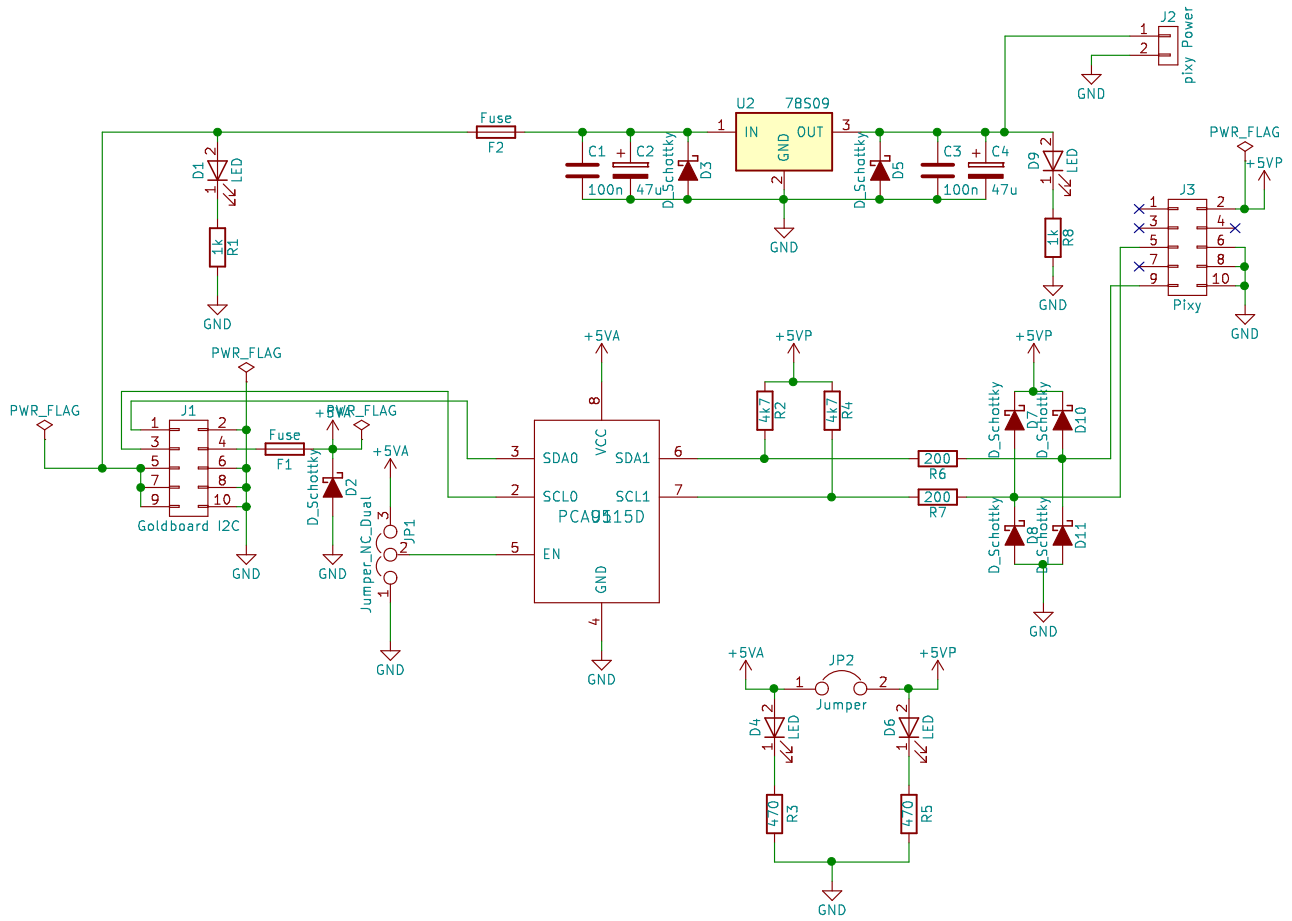

ROCCI

Sheet: /

File: pixyprotector.sch

Title: Pixyprotector

Size: A4	Date:	**Rev: V1.0**
KiCad E.D.A. kicad no-vcs-found-3ad386961ubuntu16.04.1		Id: 1/1