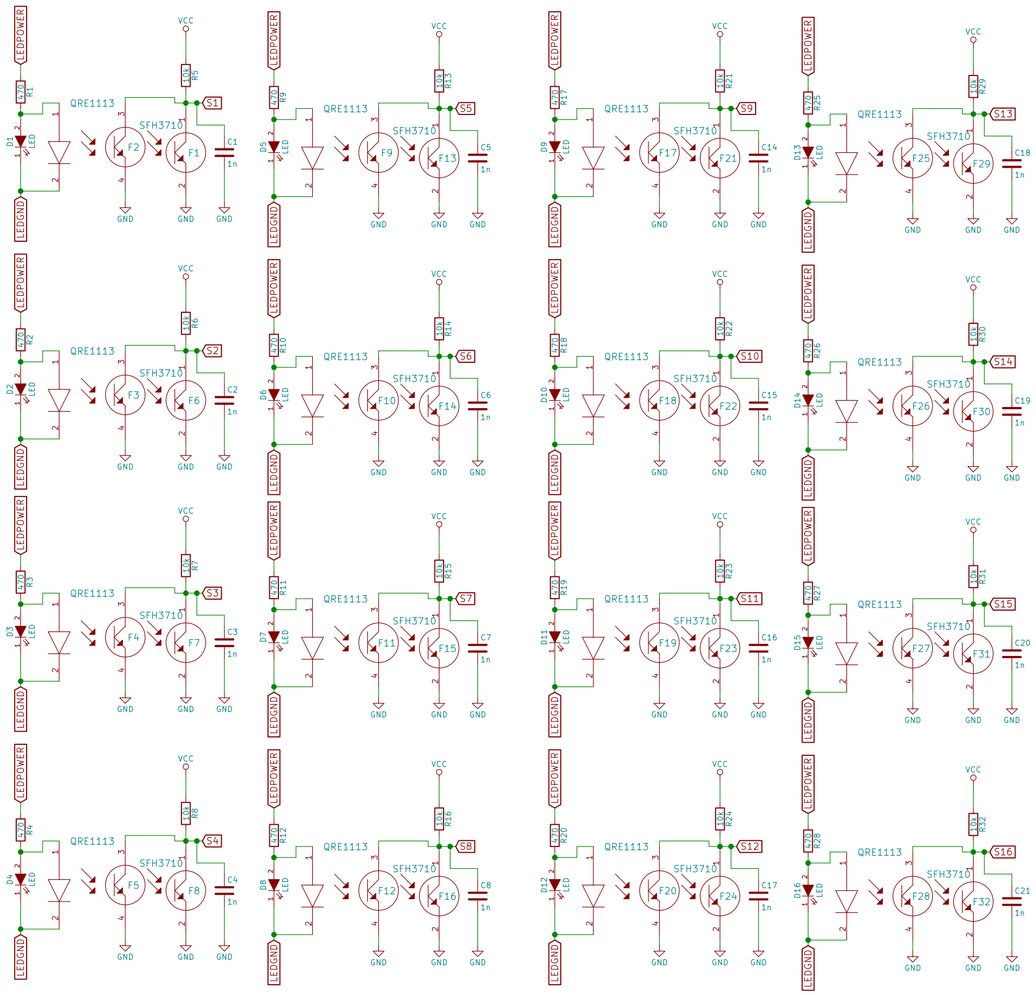

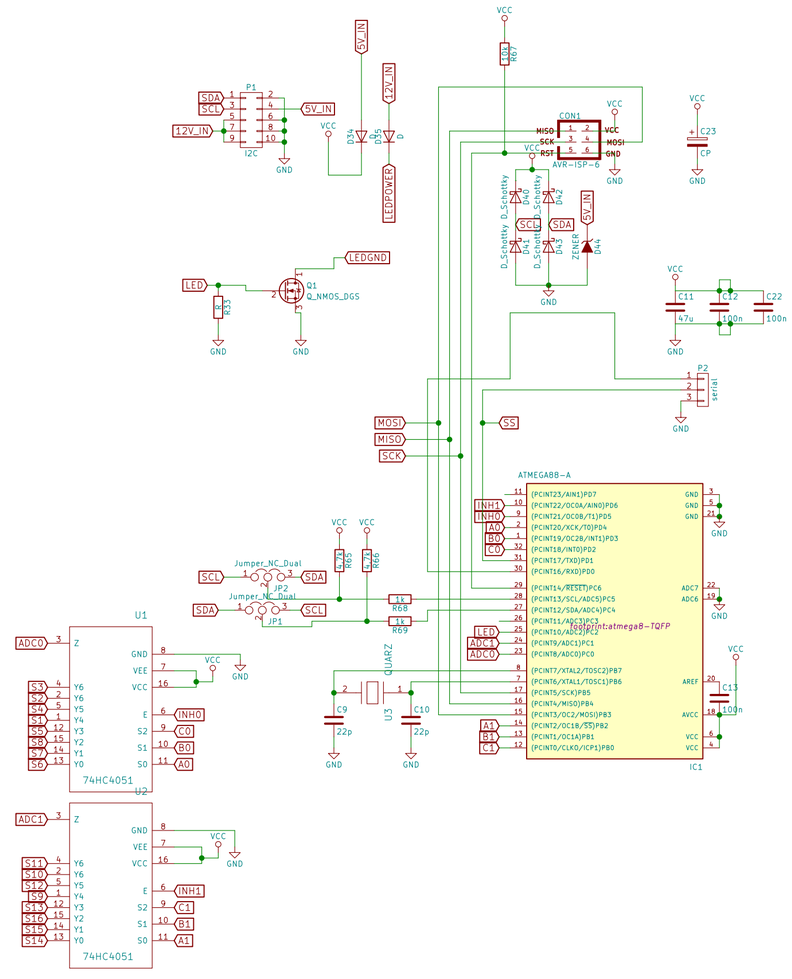

Sheet: /
File: usring.sch

Title:

Size: A2	Date:	Rev:
KiCad E.D.A. kicad 4.0.6-e0-6349~53ubuntu16.04.1		Id: 1/1