RapidPro System

Hardware Reference

For Hardware Components of a RapidPro System

Release 2021-A – May 2021

dSPACE

How to Contact dSPACE

Mail:	dSPACE GmbH Rathenaustraße 26 33102 Paderborn Germany
Tel.:	+49 5251 1638-0
Fax:	+49 5251 16198-0
E-mail:	info@dspace.de
Web:	http://www.dspace.com

How to Contact dSPACE Support

If you encounter a problem when using dSPACE products, contact your local dSPACE representative:

- Local dSPACE companies and distributors: http://www.dspace.com/go/locations
- For countries not listed, contact dSPACE GmbH in Paderborn, Germany.
  Tel.: +49 5251 1638-941 or e-mail: support@dspace.de

You can also use the support request form: http://www.dspace.com/go/supportrequest. If you are logged on to mydSPACE, you are automatically identified and do not need to add your contact details manually.

If possible, always provide the relevant dSPACE License ID or the serial number of the CmContainer in your support request.

Software Updates and Patches

dSPACE strongly recommends that you download and install the most recent patches for your current dSPACE installation. Visit http://www.dspace.com/go/patches for software updates and patches.

Important Notice

This publication contains proprietary information that is protected by copyright. All rights are reserved. The publication may be printed for personal or internal use provided all the proprietary markings are retained on all printed copies. In all other cases, the publication must not be copied, photocopied, reproduced, translated, or reduced to any electronic medium or machine-readable form, in whole or in part, without the prior written consent of dSPACE GmbH.

© 2004 - 2021 by:
dSPACE GmbH
Rathenaustraße 26
33102 Paderborn
Germany

This publication and the contents hereof are subject to change without notice.

AUTERA, ConfigurationDesk, ControlDesk, MicroAutoBox, MicroLabBox, SCALEXIO, SIMPHERA, SYNECT, SystemDesk, TargetLink and VEOS are registered trademarks of dSPACE GmbH in the United States or other countries, or both. Other brand names or product names are trademarks or registered trademarks of their respective companies or organizations.

Contents

About This Reference 19

Safety Precautions 21

Safe In-Vehicle Use of dSPACE Products..... 21
General Warnings on Using dSPACE Products..... 23
Safety Precautions for Handling the System..... 23
Safety Precautions for Using Specific RapidPro Modules..... 26
Safety Precautions for Using the PS-DINJ 2/1 Module..... 27
Safety Precautions for Using Break-Out Boxes..... 31
Safety Precautions for Shipping a RapidPro Control Unit..... 33
Saftey Precautions for Disposing dSPACE Hardware..... 33

Hardware Overview 35

Overview by Hardware Name..... 35
Assigning Modules to Use Scenarios..... 37
Module Identification by Type Code..... 40

RapidPro SC Unit 41

Unit Overview..... 42
Unit Features..... 42
Housing Components..... 43
Carrier Board Components..... 44
Block Diagram..... 45

Suitable Slots for SC Modules..... 47

Installation of SC Modules in a Single SC Unit..... 47
Single SC Unit – RoutingID 37854..... 47

Installation of SC Modules in an SC Unit that is Part of a Stack with UCB..... 49
Stack with Control Unit (MPC565) and SC Unit – RoutingID 16553 for SC-TC 8/1 Module..... 49
Stack with UCB Consisting of Control Unit (MPC565), SC Unit, and Power Unit – RoutingID 28555 for SC-TC 8/1 Module..... 51
Stack with Control Unit (MPC565), Power, and SC Unit – RoutingID 11550..... 52

Stack with Control Unit (MPC565), SC Unit, and Power Unit – RoutingID 50551 for SC-TC 8/1 Module 54
Stack with Control Unit (MPC565), Two SC Units, and Power Unit – RoutingID 53202 for SC-TC 8/1 Module 55
Stack with Control Unit (MPC565), Power, and SC Unit – RoutingID 29752 for Engine Control 57
Stack with Control Unit (MPC565), Power Unit, and SC Unit – RoutingID 61376 for PS-DINJ 2/1 Module 59
Stack with Control Unit (MPC565), two Power Units, and SC Unit – RoutingID 65422 for PS-DINJ 2/1 Module 60
Stack with Control Unit (MPC565), Two SC Units, and Power Unit – RoutingID 10243 for SC-TC 8/1 Module and PS-DINJ 2/1 Module 62

Connectors and Pinouts 65

Front Panel Connectors 65
F1 Connector 66
F2 Connector 68
Host PC Connector 70

Rear Panel Connectors 71
R1 Connector 71
R2 Connector 73

Unit in Use 76
Status LEDs 76
Temperature Sensors 79

Data Sheet 81
RapidPro SC Unit Data Sheet 81

RapidPro Power Unit 85

Unit Overview 86
Unit Features 86
Housing Components 87
Carrier Board Components 88
Block Diagram 89

Suitable Slots for PS Modules 91

Installation of PS Modules in a Single Power Unit 91
Single Power Unit – RoutingID 44205 91
Single Power Unit – RoutingID 60766 92

Installation of PS Modules in a Power Unit that is part of a Stack with UCB ... 93
Stack with Control Unit (MPC565) and Power Unit – RoutingID 35429 ... 94
Stack with UCB Consisting of Control Unit (MPC565), SC Unit, and Power Unit – RoutingID 28555 for SC-TC 8/1 Module ... 95
Stack with Control Unit (MPC565), Power Unit, and SC Unit – RoutingID 11550 ... 97
Stack with Control Unit (MPC565), SC Unit, and Power Unit – RoutingID 50551 for SC-TC 8/1 Module ... 99
Stack with Control Unit (MPC565), Power Unit, and SC Unit – RoutingID 29752 for Engine Control ... 100
Stack with Control Unit (MPC565), Power Unit, and SC Unit – RoutingID 61376 for PS-DINJ 2/1 Module ... 102
Stack with Control Unit (MPC565), two Power Units, and SC Unit – RoutingID 65422 for PS-DINJ 2/1 Module ... 103
Stack with Control Unit (MPC565), Two SC Units, and Power Unit – RoutingID 53202 for SC-TC 8/1 Module ... 105
Stack with Control Unit (MPC565), Two SC Units, and Power Unit – RoutingID 10243 for SC-TC 8/1 Module and PS-DINJ 2/1 Module ... 107

Connectors and Pinouts ... 110

Front Panel Connectors ... 110
F1 Connector ... 110
F2 Connector ... 113
Host PC Connector ... 115

Rear Panel Connectors ... 115
R1 Connector ... 116
R2 Connector ... 118

Unit in Use ... 121
Status LEDs ... 121
Temperature Sensors ... 124
Calculating the Maximum Permissible Rail Supply Voltage ... 125

Data Sheet ... 127
RapidPro Power Unit Data Sheet ... 127

RapidPro Control Unit 131

Unit Overview ... 132
Unit Features ... 132
Housing Components ... 133
Carrier Board Components ... 134

Block Diagram..... 136
COM Modules..... 137

Microcontroller Module..... 138
MC-MPC565 1/1 Module..... 138

Suitable Slots for SC Modules..... 139

Installation of SC Modules in a Single Control Unit..... 139
Single Control Unit with MPC565 – RoutingID 16384..... 139

Installation of SC Modules in a Control Unit that is Part of a Stack with UCB..... 140
Stack with Control Unit (MPC565) and SC Unit – RoutingID 16553 for SC-TC 8/1 Module..... 141
Stack with UCB Consisting of Control Unit (MPC565), SC Unit, and Power Unit – RoutingID 28555 for SC-TC 8/1 Module..... 142
Stack with Control Unit (MPC565) and Power Unit – RoutingID 35429..... 144
Stack with Control Unit (MPC565), Power, and SC Unit – RoutingID 11550..... 145
Stack with Control Unit (MPC565), SC Unit, and Power Unit – RoutingID 50551 for SC-TC 8/1 Module..... 146
Stack with Control Unit (MPC565), Two SC Units, and Power Unit – RoutingID 53202 for SC-TC 8/1 Module..... 148
Stack with Control Unit (MPC565), Power, and SC Unit – RoutingID 29752 for Engine Control..... 149
Stack with Control Unit (MPC565), Power Unit, and SC Unit – RoutingID 61376 for PS-DINJ 2/1 Module..... 151
Stack with Control Unit (MPC565), two Power Units, and SC Unit – RoutingID 65422 for PS-DINJ 2/1 Module..... 153
Stack with Control Unit (MPC565), Two SC Units, and Power Unit – RoutingID 10243 for SC-TC 8/1 Module and PS-DINJ 2/1 Module..... 155

Connectors and Pinouts..... 157

Front Panel Connectors..... 157
F1 Connector..... 157
F2 Connector..... 160
COM Connector..... 161
Host PC Connector..... 162

Unit in Use..... 163
Status LEDs..... 163
Temperature Sensors..... 166

Data Sheet..... 168
RapidPro Control Unit Data Sheet..... 168

SC-AI 4/1 Module 171

Module Overview ... 172
- Module Features ... 172
- Module Components and Functionality ... 172

Software Configuration ... 174
- Configuration via ConfigurationDesk for RapidPro ... 174

Hardware Configuration ... 176
- Overview of User-Configurable Circuit ... 176
- Solder Pads and Component Requirements ... 177
- Configuration Example: Determining the Internal Resistance of a Temperature Sensor ... 178

Module in Use ... 180
- Monitoring ... 180

Data Sheet ... 181
- SC-AI 4/1 Data Sheet ... 181
- SC-AI 4/1 Configuration Template ... 183

SC-AI 10/1 Module 187

Module Overview ... 188
- Module Features ... 188
- Module Components and Functionality ... 188

Software Configuration ... 191
- Configuration via ConfigurationDesk for RapidPro ... 191

Hardware Configuration ... 193
- Overview of User-Configurable Circuit ... 193
- Solder Pads and Component Requirements ... 194
- Configuration Example: Configuring a Low-Pass Filter ... 195

Module in Use ... 198
- Monitoring ... 198
- Diagnostics ... 198

Data Sheet ... 200
- SC-AI 10/1 Data Sheet ... 200
- SC-AI 10/1 Configuration Template ... 201

SC-DI 8/1 Module 205

Module Overview ... 206
Module Features ... 206
Module Components and Functionality ... 206

Software Configuration ... 209
Configuration via ConfigurationDesk for RapidPro ... 209

Hardware Configuration ... 211
Overview of User-Configurable Circuit ... 211
Solder Pads and Component Requirements ... 212
Configuration Example: Configuring a Pull-Up Resistor ... 213
Configuration Example: Configuring the Low-Pass Filter ... 214

Connection to Sensors ... 216
Notes on Connecting Sensors ... 216

Module in Use ... 217
Monitoring ... 217

Data Sheet ... 218
SC-DI 8/1 Data Sheet ... 218
SC-DI 8/1 Configuration Template ... 219

SC-DO 8/1 Module 221

Module Overview ... 222
Module Features ... 222
Module Components and Functionality ... 222

Software Configuration ... 225
Configuration via ConfigurationDesk for RapidPro ... 225

Hardware Configuration ... 227
Overview of User-Configurable Circuit ... 227
Solder Pads and Component Requirements ... 228

Connection to Peripheral Devices ... 230
Output Behavior Depending on the Signal Polarity Parameter ... 230

Module in Use ... 232
Monitoring ... 232
Diagnostics ... 232

Data Sheet ... 234
SC-DO 8/1 Data Sheet ... 234
SC-DO 8/1 Configuration Template ... 235

SC-DO 8/2 Module 237

Module Overview ... 238
- Module Features ... 238
- Module Components and Functionality ... 238

Software Configuration ... 241
- Configuration via ConfigurationDesk for RapidPro ... 241

Module in Use ... 243
- Monitoring ... 243
- Diagnostics ... 243

Connection to Peripheral Devices ... 245
- Connecting External Devices in Push/Pull Mode ... 245
- Connecting Loads in Low Side Mode ... 246
- Connecting Loads in High Side Mode ... 247

Data Sheet ... 249
- SC-DO 8/2 Data Sheet ... 249
- SC-DO 8/2 Configuration Template ... 250

SC-SENS 4/1 Module 253

Module Overview ... 254
- Module Features ... 254
- Module Components and Functionality ... 254

Software Configuration ... 256
- Configuration via ConfigurationDesk for RapidPro ... 256

Module in Use ... 257
- Monitoring ... 257
- Diagnostics ... 258

Data Sheet ... 259
- SC-SENS 4/1 Data Sheet ... 259
- SC-SENS 4/1 Configuration Template ... 261

SC-CCDI 6/1 Module 263

Module Overview ... 264
- Module Features ... 264
- Module Components and Functionality ... 265

Software Configuration ... 268
- Configuration via ConfigurationDesk for RapidPro ... 268

Hardware Configuration ... 270
Overview of User-Configurable Circuit ... 270
Solder Pads and Component Requirements ... 272
Configuration Example: Configuring a Pull-Up Resistor for a Camshaft Channel ... 273
Configuration Example: Configuring the Low-Pass Filter ... 274

Connection to Sensors ... 277
Notes on Connecting Sensors ... 277

Module in Use ... 278
Monitoring ... 278

Data Sheet ... 279
SC-CCDI 6/1 Data Sheet ... 279
SC-CCDI 6/1 Configuration Template ... 280

SC-EGOS 2/1 Module 285

Module Overview ... 287
Module Features ... 287
Module Components and Functionality ... 287

Software Configuration ... 290
Configuration via ConfigurationDesk for RapidPro ... 290

Connection to Lambda Probes ... 292
Notes on Connecting Lambda Probes ... 292
Determining the Pump Current of a Lambda Probe ... 293
Determining the Internal Resistance of a Lambda Probe ... 294

Module in Use ... 296
Monitoring ... 296
Diagnostics ... 296

Data Sheet ... 298
SC-EGOS 2/1 Data Sheet ... 298
SC-EGOS 2/1 Configuration Template ... 299

SC-KNOCK 4/1 Module 301

Module Overview ... 302
Module Features ... 302
Module Components and Functionality ... 302

Software Configuration ... 306
Configuration via ConfigurationDesk for RapidPro ... 306

Hardware Configuration 308
Overview of User-Configurable Circuit 308
Solder Pads and Component Requirements 309

Module in Use 311
Diagnostics 311

Data Sheet 312
SC-KNOCK 4/1 Data Sheet 312
SC-KNOCK 4/1 Configuration Template 313

SC-TC 8/1 Module 317

Module Overview 318
Module Features 318
Module Components and Functionality 319

Software Configuration 321
Configuration via ConfigurationDesk for RapidPro 321

Connection to Thermocouples 322
Notes on Connecting Thermocouples 322

Module in Use 324
Diagnostics 324

Data Sheet 326
SC-TC 8/1 Data Sheet 327
RP_THM_CAB1 Splitter Cable Data Sheet 329
RP_THM_CAB2 Splitter Cable Data Sheet 330
SC-TC 8/1 Configuration Template 331

SC-UHEGO 2/1 Module 333

Module Overview 335
Module Features 335
Module Components and Functionality 335

Software Configuration 338
Configuration via ConfigurationDesk for RapidPro 338

Driving Lambda Probes 339
Notes on Driving Denso Lambda Probes 339
Determining the Internal Resistance of a Lambda Probe 341
Determining the Current of a Lambda Probe 343

Module in Use ... 345
Monitoring ... 345
Diagnostics ... 345

Data Sheet ... 347
SC-UHEGO 2/1 Data Sheet ... 347
SC-UHEGO 2/1 Configuration Template ... 348

PS-FBD 2/1 Module 351

Module Overview ... 352
Module Features ... 352
Module Components and Functionality ... 352

Software Configuration ... 357
Configuration via ConfigurationDesk for RapidPro ... 357

Connection to Loads ... 360
Driving Bidirectional Loads ... 360
Driving Loads Connected to GND ... 361
Driving Loads Connected to UBAT ... 361

Module in Use ... 363
Monitoring ... 363
Diagnostics ... 363
Scaling the Output Voltages of the Current Measurement Devices ... 365

Data Sheet ... 367
PS-FBD 2/1 Data Sheet ... 367
PS-FBD 2/1 Configuration Template ... 369

PS-HSD 6/1 Module 371

Module Overview ... 372
Module Features ... 372
Module Components and Functionality ... 372

Software Configuration ... 375
Configuration via ConfigurationDesk for RapidPro ... 375

Hardware Configuration ... 377
Overview of User-Configurable Circuit ... 377
Solder Pads and Component Requirements ... 379
Using a Clamping Diode ... 381
Configuring the Low-Pass Filter for Current Measurement ... 383

Connection to Loads ... 385
Driving Loads ... 385
Output Behavior Depending on the Signal Polarity Parameter ... 386

Module in Use ... 388
Monitoring ... 388
Diagnostics ... 388

Data Sheet ... 391
PS-HSD 6/1 Data Sheet ... 391
PS-HSD 6/1 Configuration Template ... 393

PS-LSD 6/1 Module 397

Module Overview ... 398
Module Features ... 398
Module Components and Functionality ... 399

Software Configuration ... 401
Configuration via ConfigurationDesk for RapidPro ... 401

Hardware Configuration ... 403
Overview of User-Configurable Circuit ... 403
Solder Pads and Component Requirements ... 406
Configuring the Channel Output Value ... 408
Using a Clamping Diode ... 411
Configuring the Low-Pass Filter for Current Measurement ... 412

Connection to Peripheral Devices ... 415
Driving Loads ... 415
Notes on Connecting an Emergency Switch ... 416
Output Behavior Depending on the Signal Polarity Parameter ... 417

Module in Use ... 419
Monitoring ... 419
Diagnostics ... 419

Data Sheet ... 421
PS-LSD 6/1 Data Sheet ... 421
PS-LSD 6/1 Configuration Template ... 423

PS-DINJ 2/1 Module 427

Module Overview ... 429
Module Features ... 429
Module Components and Functionality ... 430

Software Configuration ... 435
Configuration via ConfigurationDesk for RapidPro ... 435

Connection to Peripheral Devices ... 441
Notes on Connecting Injection Valves ... 441
Notes on Connecting an External Booster Capacitor ... 442
Notes on Connecting an External Booster ... 445
Driving High Inductive Loads (Approx. > 1 mH) ... 446

Module in Use ... 450
Monitoring ... 450
Diagnostics ... 450

Data Sheet ... 453
PS-DINJ 2/1 Data Sheet ... 453
PS-DINJ 2/1 Configuration Template ... 454

PS-HCFBD 1/1 Module 457

Module Overview ... 458
Module Features ... 458
Module Components and Functionality ... 458

Software Configuration ... 463
Configuration via ConfigurationDesk for RapidPro ... 463

Hardware Configuration ... 465
Overview of User-Configurable Circuit ... 465
Solder Pads and Component Requirements ... 466
Configuration Example: Configuring the Low-Pass Filter for Current Measurement ... 467

Connection to Loads ... 470
Driving Loads ... 470

Module in Use ... 471
Monitoring ... 471
Diagnostics ... 472
Scaling the Output Voltages of the Current Measurement Device ... 473
Measuring RMS Values ... 474

Data Sheet ... 475
PS-HCFBD 1/1 Data Sheet ... 475
PS-HCFBD 1/1 Configuration Template ... 477

PS-HCHBD 2/1 Module 481

Module Overview..... 482
Module Features..... 482
Module Components and Functionality..... 483

Software Configuration..... 486
Configuration via ConfigurationDesk for RapidPro..... 486

Hardware Configuration..... 488
Overview of User-Configurable Circuit..... 488
Solder Pads and Component Requirements..... 489
Configuration Example: Configuring the Low-Pass Filter for Current Measurement..... 490

Connection to Loads..... 493
Driving Loads Connected to GND..... 493
Driving Loads Connected to UBAT..... 494

Module in Use..... 496
Monitoring..... 496
Diagnostics..... 497
Scaling the Output Voltages of the Current Measurement Device..... 498
Measuring RMS Values..... 499

Data Sheet..... 500
PS-HCHBD 2/1 Data Sheet..... 500
PS-HCHBD 2/1 Configuration Template..... 502

PS-HCFBD 1/2 Module 505

Module Overview..... 506
Module Features..... 506
Module Components and Functionality..... 507

Software Configuration..... 512
Configuration via ConfigurationDesk for RapidPro..... 512

Connection to Loads..... 514
Driving Loads..... 514

Module in Use..... 515
Monitoring..... 515
Diagnostics..... 516
Current Measurement: Scaling the Output Voltages..... 517
Measuring RMS Values..... 518

Data Sheet..... 519
PS-HCFBD 1/2 Data Sheet..... 519
PS-HCFBD 1/2 Configuration Template..... 522

PS-HCHBD 2/2 Module 525

Module Overview..... 526
Module Features..... 526
Module Components and Functionality..... 527

Software Configuration..... 535
Configuration via ConfigurationDesk for RapidPro..... 535

Connection to Loads..... 539
Driving Loads Connected to GND..... 539
Driving Loads Connected to UBAT..... 540
Driving BLDC/BLAC Motors..... 542

Module in Use..... 544
Monitoring..... 544
Diagnostics..... 545
Current Measurement: Scaling the Output Voltages..... 547
Measuring RMS Values..... 549

Data Sheet..... 550
PS-HCHBD 2/2 Data Sheet..... 550
PS-HCHBD 2/2 Configuration Template..... 553

Accessories 555

RapidPro Break-Out Boxes..... 556

Introduction to RapidPro Break-Out Boxes..... 557
Feature Overview..... 557
Components and Functionality..... 558

Break-Out Boxes in Use..... 559
Adapting the LED Indication to the Power Supply..... 560
Working Principles..... 562
Connecting Examples..... 566

Data Sheets..... 568
RapidPro Break-Out Boxes Data Sheets..... 568

Connection Cables..... 570

Ethernet Connection Cables..... 570
ETH_CAB2 Ethernet Connection Cable..... 570

ETH_CAB4 Ethernet Connection Cable..... 572
HSL_PATCH_300V Galvanically Isolated PC Connection Cable..... 572

High Current Cable..... 573
RP_HC_CAB1 Power/Load Cable..... 573

LVDS Link Cables..... 575
LVDS_CAB2 LVDS Link Cable..... 575
LVDS_CAB3 LVDS Link Cable..... 576

RapidPro Break-Out Box Connection Cables..... 576
RPBOB_CAB2 Break-Out Box Connection Cable for SC Unit/Control Unit..... 577
RPBOB_CAB3 Break-Out Box Connection Cable for Power Unit..... 578
RPBOB_CAB4 Break-Out Box Connection Cable for Control Unit..... 578

Thermocouple Cables..... 579
RP_THM_CAB1 Splitter Cable (Type K)..... 579
RP_THM_CAB2 Splitter Cable (Type J)..... 580

USB Connection Cables..... 581
USB_CAB1 Active USB Extension Cable..... 582
USB_CAB4 Interface Cable with Optoisolation..... 582
USB_CAB5 PC Connection Cable..... 583
USB_CAB6 PC Connection Cable for Calibration Hub/RapidPro..... 584
USB_CAB12 PC Connection Cable for Calibration Hub/RapidPro..... 584

Index 587

About This Reference

Contents

This reference provides hardware-related reference information on the hardware components of the RapidPro system. It includes:

- Features and electrical characteristics of the components
- Data sheets
- Unit-dependent information, such as:
  - Overview illustrations
  - Block diagrams
  - Connector pinouts
- Module-dependent information, such as:
  - I/O circuits
  - Software configuration features
  - Hardware configuration features via user-configurable circuits

Symbols

dSPACE user documentation uses the following symbols:

Symbol	Description
DANGER	Indicates a hazardous situation that, if not avoided, will result in death or serious injury.
WARNING	Indicates a hazardous situation that, if not avoided, could result in death or serious injury.
CAUTION	Indicates a hazardous situation that, if not avoided, could result in minor or moderate injury.
NOTICE	Indicates a hazard that, if not avoided, could result in property damage.
Note	Indicates important information that you should take into account to avoid malfunctions.
Tip	Indicates tips that can make your work easier.

Symbol	Description
	Indicates a link that refers to a definition in the glossary, which you can find at the end of the document unless stated otherwise.
	Precedes the document title in a link that refers to another document.

Naming conventions

dSPACE user documentation uses the following naming conventions:

%name% Names enclosed in percent signs refer to environment variables for file and path names.

< > Angle brackets contain wildcard characters or placeholders for variable file and path names, etc.

Special folders

Some software products use the following special folders:

Common Program Data folder A standard folder for application-specific configuration data that is used by all users.

```
%PROGRAMDATA%\dSPACE\<InstallationGUID>\<ProductName>
```

or

```
%PROGRAMDATA%\dSPACE\<ProductName>\<VersionNumber>
```

Documents folder A standard folder for user-specific documents.

```
%USERPROFILE%\Documents\dSPACE\<ProductName>\
<VersionNumber>
```

Local Program Data folder A standard folder for application-specific configuration data that is used by the current, non-roaming user.

```
%USERPROFILE%\AppData\Local\dSPACE\<InstallationGUID>\
<ProductName>
```

Accessing dSPACE Help and PDF Files

After you install and decrypt dSPACE software, the documentation for the installed products is available in dSPACE Help and as PDF files.

dSPACE Help (local) You can open your local installation of dSPACE Help:

- On its home page via Windows Start Menu
- On specific content using context-sensitive help via **F1**

dSPACE Help (Web) You can access the Web version of dSPACE Help at www.dspace.com/go/help.

To access the Web version, you must have a *mydSPACE* account.

PDF files You can access PDF files via the icon in dSPACE Help. The PDF opens on the first page.

Safety Precautions

Objective

To avoid risk of injury and/or property damage, read and ensure compliance with the safety precautions stated.

Where to go from here

Information in this section

Safe In-Vehicle Use of dSPACE Products....21
General Warnings on Using dSPACE Products....23
Safety Precautions for Handling the System....23
Safety Precautions for Using Specific RapidPro Modules....26
Safety Precautions for Using the PS-DINJ 2/1 Module....27
Safety Precautions for Using Break-Out Boxes....31
Safety Precautions for Shipping a RapidPro Control Unit....33
Saftey Precautions for Disposing dSPACE Hardware....33

Safe In-Vehicle Use of dSPACE Products

Connecting to the battery/power supply

A car battery can supply high currents. If a short circuit occurs, e.g., in the cable harness, the current of the car battery (power supply) generates heat in the connected cables. The heat might cause a fire.

- Insert fuses into the power supply cable and other cables that are connected to the battery/power supply to avoid an electrical fire.
- Locate the fuses close to the battery/power supply.

- Choose fuse ratings that ensure that the fuses break the circuit if the connected cables are loaded with the maximum currents supported by the cross sections of the cables used.
- Make sure that you use flame-retardant cables specified for temperatures up to 105 °C (220 °F) that were tested in conformity with IEC 60332-1-2, IEC 60332-2-2, or UL VW-1.
- Make sure that you use flame-retardant connectors specified for temperatures up to 105 °C (220 °F) and V-2 classified in conformity with IEC 60695-11-10 or UL 94.

Batteries cannot be switched off. Therefore, locate a disconnect switch in the power supply cabling:

- Use an all-pole disconnect switch that matches the rating of the RapidPro system.
- Make sure that the disconnect switch can be reached by the user in case of an emergency.

Guidelines for safe in-vehicle use of dSPACE products

Any in-vehicle use of dSPACE products in line with the contractual purposes requires the use of enclosed test tracks that are specially safety-secured for the specific purpose, i.e., with appropriately restricted access and additional appropriate safety measures.

If you intend to use dSPACE products outside enclosed tracks, you have to check with the relevant authorities in your country under which circumstances this is possible. You and the local authorities involved bear full responsibility for this type of use.

You must take appropriate measures to ensure that the overall system enters a safe state if a dangerous situation occurs, e.g., by implementing emergency shutdown or a limp-home mode. This particularly applies in the following cases:

- Where safety-critical interventions that affect vehicle behavior are performed, e.g., the stimulation of a bus system, such as CAN, or the calibration or bypassing of in-vehicle electronic control units (ECUs) that control powertrain, chassis, or body systems.
- Where dSPACE products are deployed in conjunction with ECUs that can pose a hazard if they malfunction.

Accordingly, the guidelines apply to the use of dSPACE products in aircraft or vessels in compliance with the contractual purposes.

General Warnings on Using dSPACE Products

Using ConfigurationDesk for RapidPro

Using dSPACE software can be dangerous. You must observe the following safety instructions and the relevant instructions in the user documentation.

⚠ WARNING

Improper or negligent use can result in serious personal injury and/or property damage.
Using the ConfigurationDesk for RapidPro software can have a direct effect on dSPACE systems and technical (electrical, hydraulic, mechanical) systems connected to them.

- **Only persons who are qualified to use dSPACE software, and who have been informed of the above dangers and possible consequences, are permitted to use it.**
- All applications where malfunctions or misoperation involve the danger of injury or death must be examined for potential hazards by the user, who must if necessary take additional measures for protection (for example, an emergency off switch).

Liability

It is your responsibility to adhere to instructions and warnings. Any unskilled operation or other improper use of this product in violation of the respective safety instructions, warnings, or other instructions contained in the user documentation constitutes contributory negligence, which may lead to a limitation of liability by dSPACE GmbH, its representatives, agents and regional dSPACE companies, to the point of total exclusion, as the case may be. Any exclusion or limitation of liability according to other applicable regulations, individual agreements, and applicable general terms and conditions remain unaffected.

Data loss during operating system shutdown

The shutdown procedure of Microsoft Windows operating systems causes some required processes to be aborted although they are still being used by dSPACE software. To avoid data loss, the dSPACE software must be terminated manually before a PC shutdown is performed.

Safety Precautions for Handling the System

Objective

To avoid risk of injury and/or damage to the hardware and to achieve safe and trouble-free operation, you have to observe the following guidelines.

Configuring via ConfigurationDesk for RapidPro

Changes to software-configurable hardware parameter values can cause uncontrolled movements of and/or material damage to connected devices. To avoid risk of injury and material damage:

- Before changing software-configurable parameter values, think through the effects of the changes you are planning.
- Ensure that no one is in the potential danger zone of the device (test bench, etc.) when the changes first take effect.

Updating RapidPro firmware

Updating the PLD firmware of any SC or PS module can cause uncontrolled movements of connected devices. To avoid the risk of injury and material damage: Disconnect actuators and/or sensors from the affected modules before updating the firmware.

Electromagnetic compatibility

The RapidPro hardware is a CE class A device. This equipment may cause interference in a residential installation. In this case the user is encouraged to perform appropriate measures to correct the interference. For more information on EMC standards, refer to RapidPro SC Unit Data Sheet on page 81, RapidPro Power Unit Data Sheet on page 127, or RapidPro Control Unit Data Sheet on page 168.

Using RapidPro hardware on wet locations

The RapidPro hardware is not moisture-proof and is not intended to be used on wet locations according to IEC 61010-1 (product safety).

- Do not use RapidPro hardware on wet locations.

Handling the RapidPro hardware

The housing and the connectors of the RapidPro hardware can reach temperatures above 95 °C (203 °F). To avoid burning your hands:

- Do not touch the housing and the connectors plugged to it during operation.
- Before connecting/disconnecting any device or doing other installation work, wait for the housing to cool down after switching off the unit or use protective gloves.

Connecting devices

To avoid risk of injury and damage to the RapidPro hardware:

- Do not connect any high-voltage devices to the I/O connectors of the units.
- Do not apply voltages/currents outside the specified ranges to the connector pins.
- Do not connect or disconnect any devices (for example, sensors/actuators) while the power supply of the RapidPro system and these devices is switched on.
- Observe all safety precautions described in the documentation of the connected devices.

The RapidPro hardware provides electrical energy at the I/O pins, which can cause a fire if external components such as sensors/actuators are not

appropriately connected. This particularly concerns output pins of modular boards that provide internal voltages to supply external components.

- To prevent a fire, apply the general fire safety regulations, e.g., supervise the operation, remove fire loads, and use fire-proof materials and enclosures.

Handling hardware with electrostatic sensitive devices

dSPACE hardware contains sensitive electronic devices. There is a risk of damaging the hardware or reducing its lifetime due to electrical fields or electrostatic discharge (ESD) that occur on touch. To avoid this risk, take the following precautions:

- Only qualified persons with knowledge of protective measures for electrostatic sensitive devices are allowed to unpack, install, or remove sensitive electronic devices.
- During the transport and storage of a sensitive electronic device, place it in closed ESD packaging.
- While handling a sensitive electronic device, place it on a properly grounded workstation, such as a special ESD desk or desk mat.
- You must ensure potential equalization between the environment and you, e.g., by wearing a grounded ESD wristband.
- Do not touch the board or the contacts of the connectors, even after installing the sensitive electronic device.

Assembling RapidPro hardware

Before doing any installation or assembly work on the RapidPro hardware:

1. Power off the RapidPro hardware.
2. Disconnect all connectors.

Assembling a stack with unit connection bus (UCB)

To avoid malfunctions of your system, do not change the assembly of a stack with unit connection bus (UCB) yourself. Specifically:

- Do not add or remove a unit.
- Do not change the order of the units.

If it is necessary to change a stack with UCB, contact dSPACE (local representative) to have this done.

Handling and mounting modules

You install dSPACE hardware at your own risk. Only qualified persons with experience in installing computer hardware and electric devices should perform the installation. Any damage to or malfunction of dSPACE hardware caused by improper installation is not covered by the warranty, unless the handling and installation instructions are shown to be defective.

Using thermal conduction foil Mounting SC, PS, or COM modules without using thermal conduction foil as isolation between the module and the unit's carrier board damages the hardware. Ensure that there is thermal conduction foil to avoid electrical contact between the module and the attachment mount of the unit's carrier board.

Soldering devices to modules

Unprofessional soldering damages the hardware and/or leads to loss of hardware functionality.

- Only qualified persons with knowledge and experience in the following areas should solder electric devices:
  - Soldering in general (in particular, soldering SMD devices)
  - PCB (printed circuit boards) assembly
- Use only the correct tools, for example, a suitable SMD soldering station.
- You solder at your own risk. Any damage to or malfunction of dSPACE hardware caused by improper soldering is not covered by the warranty.

Soldering on powered and mounted modules damages the hardware! Before you begin to solder:

1. Power off the RapidPro hardware.
2. Disconnect all connectors.
3. Uninstall the module you want to modify.

Safety Precautions for Using Specific RapidPro Modules

Knowledge about modules

You need detailed knowledge of the RapidPro modules to be used in your application. You should especially familiarize yourself with the safety precautions for each module. An overview of all the precautions is given below. They must be observed to avoid damage to the hardware and achieve safe and trouble-free operation.

For module details, refer to the module chapters in the *RapidPro System – Installation and Configuration Reference*.

SC-DO 8/1 (DS1646)

Changing the signal polarity parameter in ConfigurationDesk for RapidPro can damage the connected devices.

- Before changing the parameter, think through the effects of the changes you are planning.
- You can also invert the signal via the RTI RapidPro Control Unit Blockset (if used). If you are not sure what the actual polarity is, measure/monitor the output signals before connecting a device.

SC-EGOS 2/1 (DS1634)

Setting the pump reference current unequal 0 A can damage the connected lambda probe.

To avoid damage:

- Change the pump reference current parameter only according to the technical specifications of the lambda probe. The setting must not exceed the maximum current specified in the probe's documentation.

PS-FBD 2/1 (DS1661) and PS-HCFBD 1/1 (DS1667)

Choosing the fast-decay mode can cause uncontrolled movements and/or material damage of connected devices.

In fast-decay mode, both input signals (xxxx_DIR_IN and xxxx_CTRL_IN) are set to low level if you build a Simulink model without connecting PWM signals to the full-bridge. This means that a connected motor starts if you download your application and no PWM signals are connected to the module inputs. If you invert the polarity of the signals via ConfigurationDesk for RapidPro, high-level signals trigger the described behavior.

To avoid risk of injury and material damage:

- When building the Simulink model, think through the effects of the connections you are planning and the settings of the modules.
- Ensure that no one is in the potential danger zone of the device (test bench, etc.) when the changes first take effect.

PS-HCHBD 2/1 (DS1668)

Load dump and/or static overvoltage damages the Power Unit, if you use the PS-HCHBD 2/1 module in low-side driver mode.

To avoid damage to the Power Unit:

- Take suitable measures against load dump and/or static overvoltage on the part of the load.
- Use the PS-HCHBD 2/1 module's low-side driver mode only if load dump and/or static overvoltage cannot occur in your application.

PS-DINJ 2/1 (DS1664)

The PS-DINJ 2/1 module (DS1664) can generate hazardous voltages up to 100 V. To avoid risk of electric shock, observe the precautions stated in Safety Precautions for Using the PS-DINJ 2/1 Module on page 27.

Safety Precautions for Using the PS-DINJ 2/1 Module

Objective

The PS-DINJ 2/1 module (DS1664) can generate hazardous voltages up to 100 V. According to international standards, a voltage higher than 60 V DC or 42.4 V AC_{peak} is specified as hazardous.

Observe the following safety precautions to avoid risk of electric shock.

Designated use

The PS-DINJ 2/1 module (DS1664) is designed exclusively for use in a RapidPro system to drive electromagnetic injection valves.

The RapidPro system (and therefore the module) must be used only for prototyping purposes, for example, in development and research projects.

Using the PS-DINJ 2/1 module for purposes other than those mentioned above (such as for serial operation in vehicles or machines) is considered contrary to its designated use.

User qualification

Work on the module, and on the connected electrical equipment, must be carried out only by a skilled electrician or by instructed persons under the supervision and guidance of a skilled electrician and in accordance with electrical engineering rules and regulations.

A skilled electrician is a person with sufficient technical training, knowledge, and experience, and knowledge of the relevant regulations, to assess the tasks assigned to him/her and to recognize possible dangers.

Safety guidelines

⚠ WARNING

Hazardous voltages! The PS-DINJ 2/1 module (DS1664) generates output voltages up to 100 V.

Risk of serious injury or death due to electric shock

- Do not touch the connector pins of the RapidPro Power Unit or any connected terminals and devices while the system is powered.
- Do not power the RapidPro system if the cover of the housing has been removed.
- After the RapidPro system is powered down, wait at least 3 minutes for the internal voltage to dissipate, before connecting/disconnecting devices or doing any installation work.
- **In the event of hardware damage to the PS-DINJ 2/1 module, hazardous voltages also can occur at unexpected positions on any device which is connected directly or indirectly to the RapidPro system. Therefore:**
  - Use only electrically safe host PC connection cables provided by dSPACE.
  - Connect the RapidPro housing to the negative terminal of your power supply (to the negative pole of the battery in the vehicle).
  - Ensure that the RapidPro system and all devices connected to it are within a separate test area according to the locally valid safety standards for the installation and operation of electrical test equipment.

  See below for detailed descriptions of the necessary safety measures.

Safety measures provided by dSPACE

To avoid the risk of electric shock, dSPACE provides safety measures which take effect even in the event of hardware damage to the PS-DINJ 2/1 module.

Do not use and operate the PS-DINJ 2/1 module (DS1664) without observing the safety measures described below.

Measures	Description
Electrically safe connection between dSPACE hardware and host PC	If you use a RapidPro system with a DS1664 installed inside, you must protect your host PC and yourself against unexpected hazardous voltages. To do so, you must connect the host PC to the dSPACE hardware (RapidPro system and a connected dSPACE prototyping system) via electrically safe PC connection cables as shown below: ▪ USB_CAB12: to connect the RapidPro system to the host PC ▪ ETH_CAB2: to connect MicroAutoBox II to the host PC ▪ HSL_PATCH_300V: to connect an expansion box (for example, PX10, AutoBox) to the host PC. Instead of this safe crossed-over patch cable, you can use a connection via fiber-optic cable. 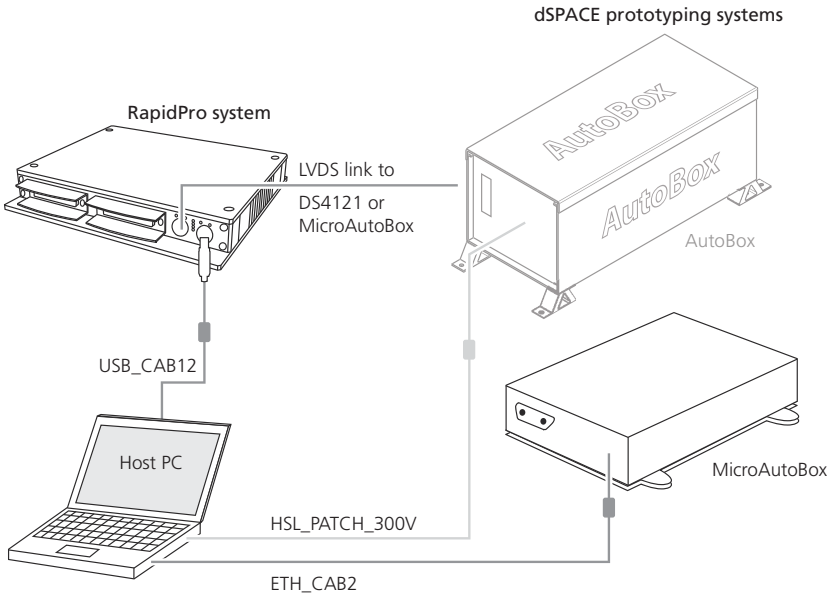 The cables provide galvanical isolation. They are electrically safe up to voltages of 300 VDC/AC_{RMS} and 600 V_{peak}. The cable names are printed on the cable.
Connection of RapidPro housing to negative terminal	You must connect the housing to the negative terminal of the power supply (to the negative pole of the battery in a vehicle) via a ground lead. If you do not perform the connection, the housing can carry hazardous voltages if hardware damage occurs to the DS1664. ▪ RapidPro systems delivered as of November 2006: Each system provides a male cable lug on the rear side as shown below. A ground lead (2.5 mm²) with female cable lug is delivered with every RapidPro system. In a stack, it is

Measures	Description
	sufficient to establish only one connection between housing and negative terminal. ▪ RapidPro systems delivered before November 2006: Contact dSPACE to upgrade your system. 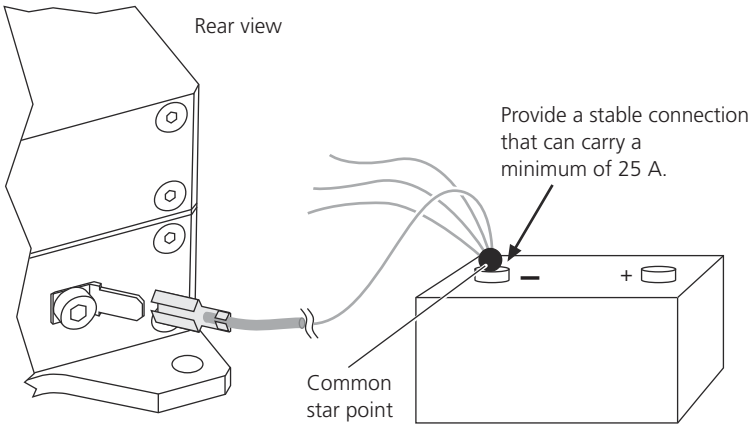 Star point grounding is recommended. For details, refer to Grounding Examples (RapidPro System Hardware Installation Guide 🕮).
Warning labels on the RapidPro hardware	A RapidPro system with DS1664 installed inside has a HAZARDOUS VOLTAGES warning label with safety precautions on the cover of the unit (or stack). The module also has a warning label. 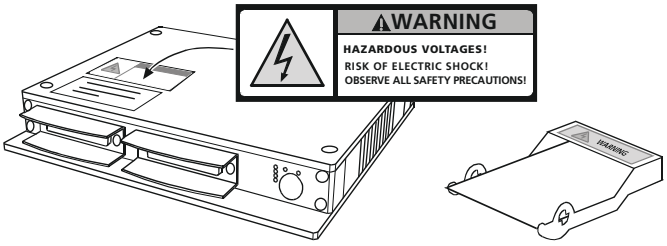 Use and operate a RapidPro system with a DS1664 (installed inside) only if the warning labels are properly attached as shown above. If you need further labels, contact dSPACE.
Warning labels on connected Break-Out Boxes	All RapidPro Break-Out Boxes which you want to connect to a RapidPro system with DS1664 installed inside must have the HAZARDOUS VOLTAGES warning label on their housing as shown below. 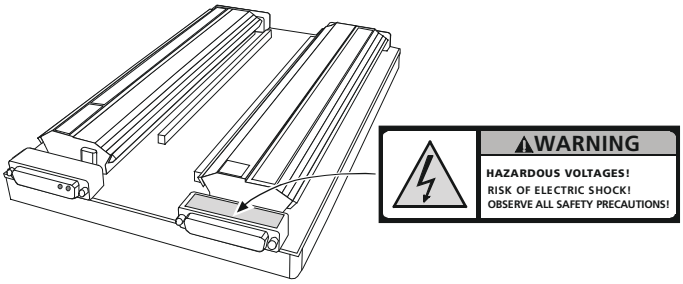 If a Break-Out Box does not have a warning label, attach it firmly to a Sub-D connector of the box. If you need further labels, contact dSPACE.

Safety measures to be carried out by the user

In addition to the measures provided by dSPACE, you are responsible for setting up the electrical equipment in your test area. In detail:

- When setting up your electrical system and the equipment of your test bench/vehicle, you have to comply with the locally valid safety standards for the installation and operation of electrical test equipment.
- Ensure that the RapidPro system and all devices connected to it are within a separate test area according to these locally valid safety standards.

Example of setup

As an example, the illustration below shows a setup with dSPACE hardware (RapidPro system and dSPACE prototyping system) connected to the host PC using galvanically isolated cables. This connection is electrically safe if the voltage applied to the hardware within the test area does not exceed 300 V DC/AC_{RMS}, or 600 V_{peak}.

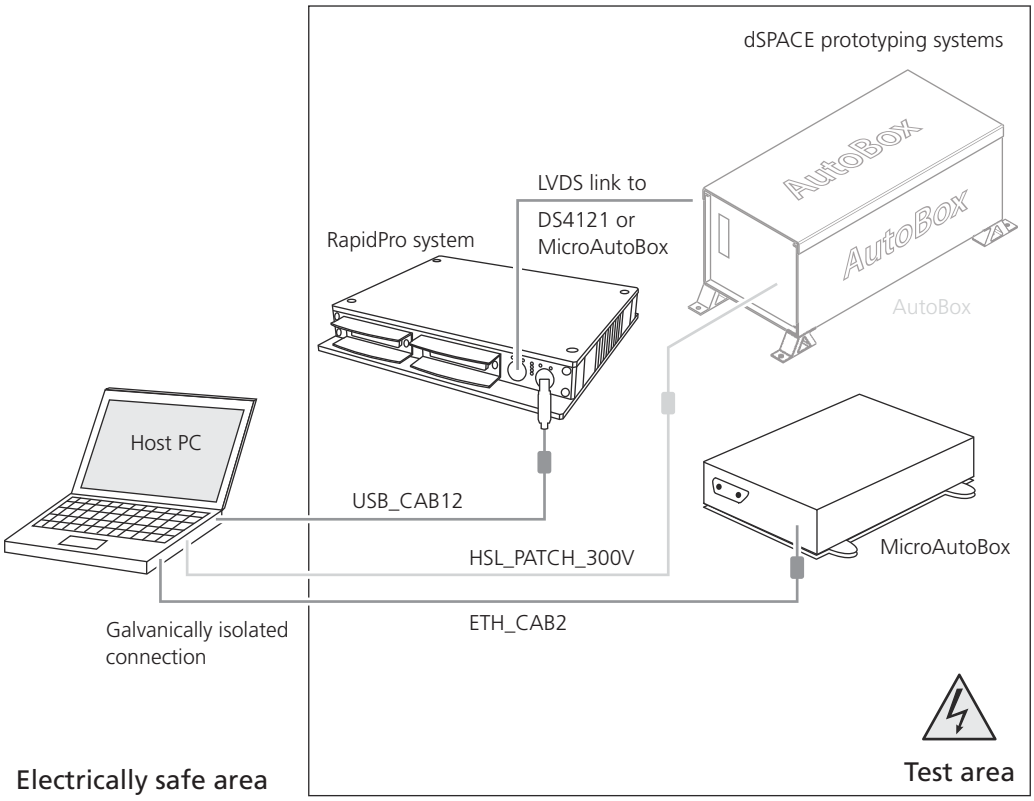

Safety Precautions for Using Break-Out Boxes

Objective

To avoid risk of injury and/or damage to the hardware and to achieve safe and trouble-free operation, you have to observe the following guidelines.

Working with Break-Out Boxes

Depending on the connected devices and the modules used in the connected RapidPro units, there can be hazardous voltages on the contacts of the boxes. To avoid risk of serious injury or death due to electric shock:

- Do not touch bare contacts, connector pins or any connected terminals and devices while the system is powered.
- The PS-DINJ 2/1 module (DS1664) can generate hazardous voltages up to 100 V. To avoid risk of electric shock, also observe the module-specific precautions stated in Safety Precautions for Using the PS-DINJ 2/1 Module on page 27.

Changing the existing cable harness via Break-Out Box can cause uncontrolled movements of and/or damage to connected devices. To avoid risk of injury and material damage:

- Before changing the cabling, think through the effects of the changes you are planning.
- Ensure that no one is in the potential danger zone of the device (test bench, etc.) when the changes first take effect.

Connecting devices

To avoid risk of injury and damage to the RapidPro hardware:

- Do not connect any high-voltage devices to the I/O connectors of the units.
- Do not apply voltages/currents outside the specified ranges to the connector pins.
- Do not connect or disconnect any devices (for example, sensors/actuators) while the power supply of the RapidPro system and these devices is switched on.
- Observe all safety precautions described in the documentation of the connected devices.

The RapidPro hardware provides electrical energy at the I/O pins, which can cause a fire if external components such as sensors/actuators are not appropriately connected. This particularly concerns output pins of modular boards that provide internal voltages to supply external components.

- To prevent a fire, apply the general fire safety regulations, e.g., supervise the operation, remove fire loads, and use fire-proof materials and enclosures.

Connecting UBAT and GND

To avoid damage to the Break-Out Boxes:

- Do not connect your power supply directly to the UBAT and GND terminals of the boxes.
- Observe the instructions given in Powering a RapidPro System with Connected Break-Out Boxes (RapidPro System Hardware Installation Guide 🕮).

Installation location

To avoid damage to the Break-Out Boxes:

- Do not use the Break-Out Boxes in the vehicle's engine compartment.
- Do not use the Break-Out Boxes in humid ambient conditions.

Safety Precautions for Shipping a RapidPro Control Unit

Shipping a RapidPro Control Unit

Observe the following when shipping RapidPro hardware with Control Unit:

- The packaging must be stable and withstand a 1.2 m (47 in.) drop test.
- The packaging must bear the *Lithium Battery Mark* label with UN number 3091 and a phone number of your company for further information.

  A person must be available at the phone number provided who can provide information about the device being sent. The phone number must begin with the country code.
- The *Lithium Battery Mark* label must be at least 110 mm (4.4 in.) high and at least 120 mm (4.8 in.) wide.
- If the RapidPro hardware is shipped by plane, enter the following note to the *Nature and Quantity of Goods* field of the airbill:

  Lithium metal batteries in compliance with Section II of PI 970

For battery characteristics, refer to RapidPro Control Unit Data Sheet on page 168.

Saftey Precautions for Disposing dSPACE Hardware

Disposing dSPACE hardware

You must ensure that dSPACE hardware is disposed of in accordance with the applicable regional rules and regulations. You are strongly recommended to contact the regional waste management authorities to find a disposal or recycling center for the proper and environmentally sound disposal of dSPACE hardware (e-waste). Recycle or reuse dSPACE hardware wherever possible.

Battery information A Lithium battery is permanently installed in the RapidPro Control Unit. If your RapidPro hardware contains a Control Unit and you are shipping the RapidPro hardware to a disposal or recycling center, observe the notes on shipment.

For battery characteristics, refer to RapidPro Control Unit Data Sheet on page 168.

Hardware Overview

Objective

The RapidPro hardware consists of three unit types and different interchangeable modules. Signal conditioning (SC) and power stage (PS) modules can be mounted on the RapidPro units to set up application-specific systems.

Where to go from here

Information in this section

Overview by Hardware Name.....35
Assigning Modules to Use Scenarios.....37
Module Identification by Type Code.....40

Overview by Hardware Name

Objective

The following overview will give you a quick introduction to the units and SC/PS modules. It also guides you to the corresponding chapters in this documentation for further information:

Hardware Name		Description
Units	RapidPro SC Unit on page 41	The RapidPro SC Unit is a compact aluminum box that provides slots for signal conditioning modules.
	RapidPro Power Unit on page 85	The RapidPro Power Unit is a compact aluminum box that provides slots for power stage modules.
	RapidPro Control Unit on page 131	The RapidPro Control Unit is a compact aluminum box that is equipped with a microcontroller module and also provides slots for signal conditioning modules and communication modules.

Hardware Name		Description
SC modules	SC-AI 4/1 Module on page 171	The SC-AI 4/1 module (DS1631) is an analog input module with four differential input channels.
	SC-AI 10/1 Module on page 187	The SC-AI 10/1 module (DS1633) is an analog input module with ten single-ended input channels which are referenced to isolated ground.
	SC-DI 8/1 Module on page 205	The SC-DI 8/1 module (DS1642) is a digital input module which contains eight comparator channels.
	SC-DO 8/1 Module on page 221	The SC-DO 8/1 module (DS1646) is a digital output module providing eight decoupled open drain outputs.
	SC-DO 8/2 Module on page 237	The SC-DO 8/2 module (DS1647) is a digital output module providing eight galvanically isolated outputs which can operate in different output modes (Push/pull mode; Low side mode; High side mode).
	SC-SENS 4/1 Module on page 253	The SC-SENS 4/1 module (DS1626) is a sensor supply module which contains four differential output channels.
	SC-CCDI 6/1 Module on page 263	The SC-CCDI 6/1 module (DS1637) is an input module especially designed to condition the signals of camshaft and crankshaft sensors.
	SC-EGOS 2/1 Module on page 285	The SC-EGOS 2/1 module (DS1634) is a two channel exhaust gas oxygen sensor (EGOS) module for connecting LSU4.2 and/or LSU4.9 Bosch lambda probes.
	SC-KNOCK 4/1 Module on page 301	The SC-KNOCK 4/1 module (DS1635) has four channels to connect piezoelectric knock sensors.
	SC-TC 8/1 Module on page 317	The SC-TC 8/1 module (DS1638) provides 8 channels to connect thermocouples to a RapidPro system via splitter cable.
	SC-UHEGO 2/1 Module on page 333	The SC-UHEGO 2/1 module (DS1639) is a two-channel universal heated exhaust gas oxygen (UHEGO) sensor module for connecting PLUS2.1 and/or PLUS3.x Denso lambda probes.
PS modules	PS-FBD 2/1 Module on page 351	The PS-FBD 2/1 module (DS1661) is a full-bridge power stage module with two channels for driving bidirectional loads such as DC motors. Each channel provides two control inputs and can drive one load connected at the two outputs.
	PS-HSD 6/1 Module on page 371	The PS-HSD 6/1 (DS1663) is a high-side driver power stage module that provides six channels to drive loads that are connected to GND, such as valves, relays, ignition coils, heating elements, and lamps.
	PS-LSD 6/1 Module on page 397	The PS-LSD 6/1 (DS1662) is a low-side driver power stage module that provides six channels to drive loads which

Hardware Name		Description
		are connected to UBAT, such as valves, relays, ignition coils, or heating elements.
	PS-DINJ 2/1 Module on page 427	The PS-DINJ 2/1 module (DS1664) is a power stage module with two channels to drive electromagnetic injection valves.
	PS-HCFBD 1/1 Module on page 457	The PS-HCFBD 1/1 module (DS1667) is a high-current, full-bridge power stage module with one channel for driving bidirectional loads such as DC motors. It provides two control inputs and can drive one load connected at the two outputs.
	PS-HCHBD 2/1 Module on page 481	The PS-HCHBD 2/1 module (DS1668) is a high-current, half-bridge power stage module with two channels for driving loads such as valves, relays, etc. in half-bridge, high-side driver, or low-side driver mode.
	PS-HCFBD 1/2 Module on page 505	The PS-HCFBD 1/2 module (DS1767) is a high-current, full-bridge power stage module with one channel for driving bidirectional loads such as DC motors (12 V or 24 V).
	PS-HCHBD 2/2 Module on page 525	The PS-HCHBD 2/2 module (DS1768) is a high-current, half-bridge power stage module with two channels for driving loads in different modes in 12 V or 24 V power supply systems.
COM modules	COM-USB-CI 1/1 (refer to COM Modules on page 137)	The COM-USB-CI 1/1 module (DS1609) is a one-channel USB configuration interface module (only used in the I/O subsystem scenario).
	COM-LVDS 1/1 (refer to COM Modules on page 137)	The COM-LVDS 1/1 module (DS1606) is a one-channel LVDS interface module (only used in the I/O subsystem scenario).
MC module	MC-MPC565 1/1 Module on page 138	The MC-MPC565 1/1 module (DS1602) is based on the microcontroller MPC565 (only used in the I/O subsystem scenario).

SC and PS modules with other features are still under development. Contact dSPACE for further information and let us know about your requirements for future modules.

Assigning Modules to Use Scenarios

Objective

You can use RapidPro systems in different use scenarios. Each use scenario requires specific hardware components.

Use scenarios

Signal conditioning and power stages Single RapidPro units (SC Unit or Power Unit) are used to adapt automotive sensors and actuators to a prototyping system such as MicroAutoBox or AutoBox including DS1007 plus I/O boards.

I/O subsystem RapidPro system is used here as a slave microcontroller to extend existing prototyping systems (MicroAutoBox II or AutoBox including DS1007 plus DS4121) with additional I/O functionality.

Note

MicroAutoBox III does not support this use scenario.

Using modules for a specific use scenario

The following table shows which module you can use for a specific use scenario:

RapidPro Module	Signal Conditioning and Power Stages	I/O Subsystem
SC-AI 4/1 (DS1631)	✓	✓
SC-AI 10/1 (DS1633)	✓	✓
SC-DI 8/1 (DS1642)	✓	✓
SC-DO 8/1 (DS1646)	✓	✓
SC-DO 8/2 (DS1647)	✓	✓
SC-SENS 4/1 (DS1626)	✓	✓
SC-CCDI 6/1 (DS1637)	✓	✓
SC-EGOS 2/1 (DS1634)	✓	✓
SC-KNOCK 2/1 (DS1635)	–	✓
SC-TC 8/1 (DS1638)	–	✓
SC-UHEGO 2/1 (DS1639)	✓	✓
PS-FBD 2/1 (DS1661)	✓	✓

RapidPro Module	Signal Conditioning and Power Stages	I/O Subsystem
PS-HSD 6/1 (DS1663)	✓	✓
PS-LSD 6/1 (DS1662)	✓	✓
PS-DINJ 2/1 (DS1664)	✓	✓
PS-HCFBD 1/1 (DS1667)	✓	✓
PS-HCHBD 2/1 (DS1668)	✓	✓
PS-HCFBD 1/2 (DS1767)	✓	✓
PS-HCHBD 2/2 (DS1768)	✓	✓
COM-LVDS 1/1 (DS1606)	–	✓
COM-USB-CI 1/1 (DS1609)	–	✓
MC-MPC565 1/1 (DS1602)	–	✓

Module Identification by Type Code

Objective

The main features are identified in the module type names. The following illustration shows the type codes, with an explanatory example.

Example: SC – AI 4 / 1

Module Category	
Signal Conditioning	SC
Power Stage	PS
Communication	COM
Microcontroller	MC

Input/Output Specification	
Analog Input	AI
Digital Input	DI
Digital Output	DO
Sensor Supply	SENS
Crank-/Camshaft Digital Input	CCDI
Thermocouple	TC
Exhaust Gas Oxygen Sensor	EGOS
Knock Sensor	KNOCK
Full-Bridge Driver	FBD
High-Side Driver	HSD
Low-Side Driver	LSD
High-Current Half-Bridge Driver	HCHBD
LVDS Interface	LVDS
USB Configuration Interface	USB-CI
MPC565 Microcontroller	MPC565
...	...

Number of Channels	1, 2, ..., x

Variant Identification	1, 2, ..., x

RapidPro SC Unit

Short description

The RapidPro SC Unit is a component of the RapidPro hardware. It is a compact aluminum box that provides slots for signal conditioning modules.

Where to go from here

Information in this section

Unit Overview.....42
Information on the unit's features, components, and functionality will help you assess its possible uses.

Suitable Slots for SC Modules.....47
The SC Unit provides slots to install signal conditioning modules (SC modules). Which slot you can install which module in, depends on the assembly of your RapidPro hardware.

Connectors and Pinouts.....65
Information on the unit's external I/O connectors will help you, for example, to build the cable harness.

Unit in Use.....76
You have access to information (i.e., status LEDs, temperatures on the unit) which the unit provides during operation.

Data Sheet.....81
The data sheet summarizes the technical data of the SC Unit.

Unit Overview

Objective

The SC Unit consists of an enclosure that provides external connectors and contains a carrier board that has slots, for example, for RapidPro SC modules.

Where to go from here

Information in this section

Unit Features.....42
Housing Components.....43
Carrier Board Components.....44
Block Diagram.....45

Unit Features

Use cases

- Use as single unit for signal conditioning (without other RapidPro units)
- Use together with the Control Unit, additional SC Units and/or other Power Units as a common system with internal electrical connections

Support of signal conditioning modules

- Up to 80 channels are available per SC Unit: 40 analog and 40 digital I/O channels
- Slots for up to 8 signal conditioning modules (SC modules)
- Support of modules with up to 8 channels per slot
- Support of modules with different shapes (form factors)
- Easy configuration of the module parameters with software and on-board microcontroller

Designed for in-vehicle use

- Wide supply voltage range, reverse- and overvoltage-protected
- Remote control input to switch the unit on or off
- Automotive temperature range
- Locking system for the modules against accidental disconnection

Flexible assembly

The unit can be used either as a single unit or with additional Power Units and/or a Control Unit. You can assemble the units in a stack for use as one physical unit. If the SC Unit is assembled with a Control Unit they have an internal electrical connection via unit connection bus (UCB).

For detailed information, refer to Unit connection bus (UCB) on page 46.

More features

For a complete list of the unit's features, refer to RapidPro SC Unit Data Sheet on page 81.

Housing Components

Objective

The housing of the SC Unit is modular in design, providing access to the input and output signals via its connectors.

Exterior view

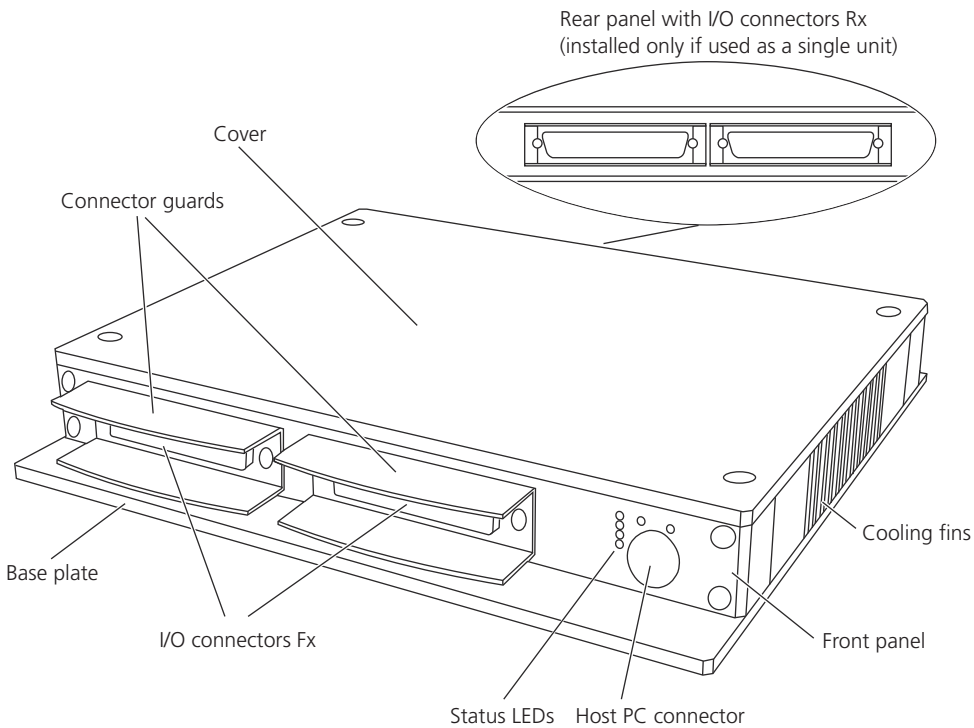

Components and their functions

The *front panel* and the *rear panel* provide different connectors:

- *I/O connectors Fx* provide the connections to the power supply (UBAT) and external devices.
- The *host PC connector* provides the communication with your host PC based on a USB interface. It is used for module configuration and diagnostics, if the unit is used as single unit.
- The *status LEDs* display different states of the SC Unit. They can be used for troubleshooting.

- The *I/O connectors Rx* provide the connection to a dSPACE rapid control prototyping (RCP) system (MicroAutoBox or a dSPACE modular system) and are mounted if the unit is used as single unit.

For detailed information on the connectors, their pinout, and the signal descriptions, refer to Connectors and Pinouts on page 65.

For the meaning of the LEDs, refer to Status LEDs on page 76.

Connector labels

The labels of the I/O connectors on a rear panel always begin with an 'R' and the labels of the I/O connectors on a front panel always begin with an 'F'. The host PC connector is labeled 'Host PC'. The labels are printed near the connectors at the front of the panel.

Carrier Board Components

Objective

The carrier board inside the SC Unit holds different components.

Interior view

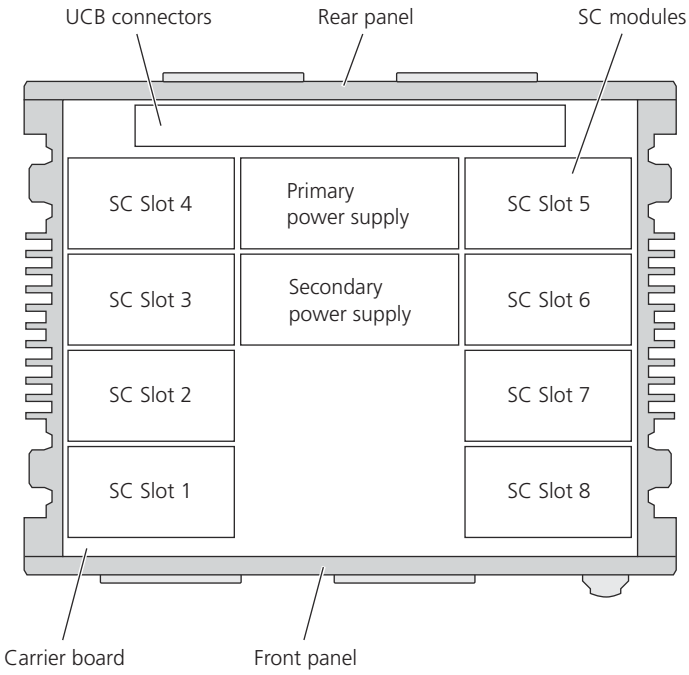

Components and their functions

- The *carrier board* comprises a microcontroller (for configuration), a power supply, and 8 *SC slots* for signal conditioning modules.

- The *power supply* of the SC Unit is modular in design. It is split into a primary and a secondary power supply for easy adaptation to different power supply requirements.
- The *UCB connectors* provide the internal connection to other RapidPro units via the unit connection bus (UCB). If you use the SC Unit as a single unit, the UCB connectors provide the connection to I/O connectors Rx on the rear panel.

Block Diagram

Overview illustration

The block diagram shows the functional units and their interrelations.

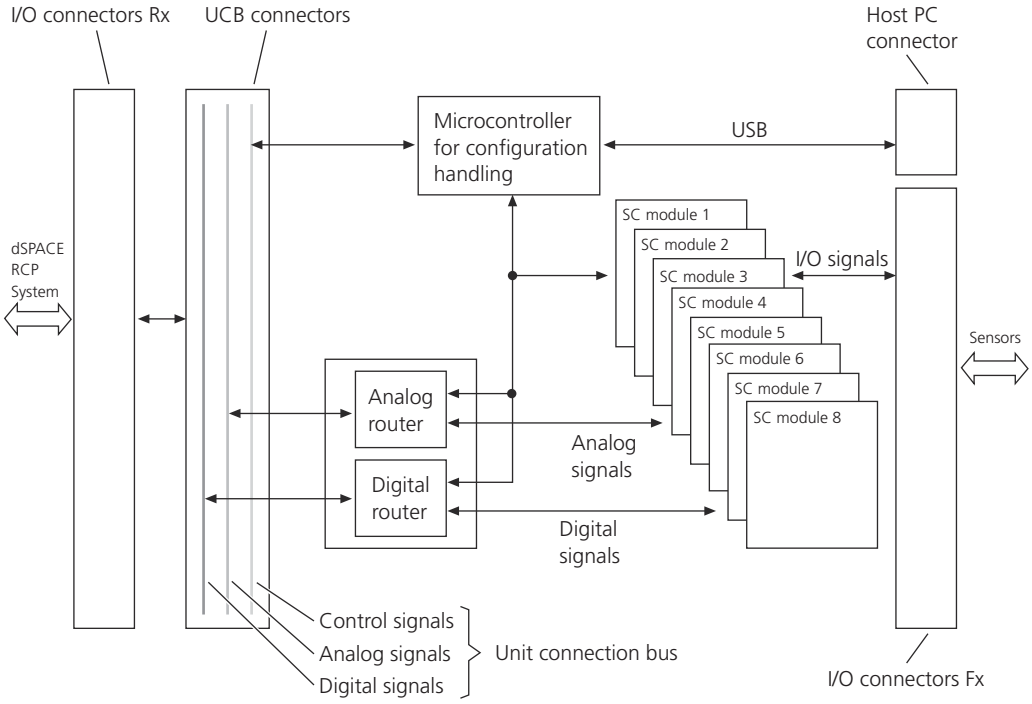

Signal routing

The digital and analog routers are controlled by the on-board microcontroller, which needs routing code (provided by dSPACE) containing pin-mapping information on the installed modules. This routing code defines which SC module can be installed on which slot.

For details, refer to Suitable Slots for SC Modules on page 47.

Unit connection bus (UCB)

The unit connection bus (UCB) includes digital, analog and control signals and is located on the UCB connectors.

- If the unit is used as single unit, the relevant signals of the UCB are available on I/O connectors Rx to connect it to a dSPACE RCP system.
- If one or more SC and/or Power Units are combined with the Control Unit, the UCB is the connection between the units. Additionally the supply voltage (UBAT and GND) connected on the front I/O connector of the Control Unit is passed on the UCB connectors. In this way the Control Unit powers the internal functions of all units in an assembled stack, for example, for software configuration.

Suitable Slots for SC Modules

Objective

If you want to install, change or rearrange RapidPro modules in a single unit or a stack, you have to consider some restrictions.

Definition via routing code

Which module can be installed on which slot is defined via the routing code. This code varies according to the assembly (single unit or stack).

The routing code is stored in the specific single unit or stack with UCB. You can identify it by its unique RoutingID, which can be displayed via ConfigurationDesk for RapidPro.

Where to go from here

Information in this section

Installation of SC Modules in a Single SC Unit.....47

Installation of SC Modules in an SC Unit that is Part of a Stack with UCB.....49

Installation of SC Modules in a Single SC Unit

Single SC Unit – RoutingID 37854

Objective

Which SC module can be installed on which slot of a single SC Unit is defined via the routing code. Currently, only one routing code (RoutingID 37854) is provided.

Note

If you rearrange the modules on the carrier board contrary to the tables below, the routing code stored in the unit has to be modified by dSPACE.

Installing or rearranging an SC-UHEGO 2/1 module (DS1639)

If you want to install or rearrange an SC-UHEGO 2/1 module (DS1639) in a single unit or a stack with UCB, you need a custom-built routing code. Contact dSPACE for an appropriate routing code.

RoutingID 37854

The following table shows you which SC modules can be installed on which slot on a single SC Unit using the routing code with RoutingID 37854:

Single SC Unit	Module	SC1	SC2	SC3	SC4	SC5	SC6	SC7	SC8
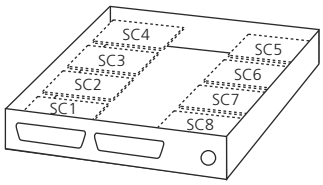	SC-AI 4/1 [1] (DS1631)	✓	✓	✓	✓	✓	✓	✓	–
	SC-AI 10/1 [2] (DS1633)	✓	✓	✓	✓	✓	✓	–	–
	SC-DI 8/1 (DS1642)	–	–	–	✓	✓	✓	✓	✓
	SC-DO 8/1 (DS1646)	–	–	–	✓	✓	✓	✓	✓
	SC-DO 8/2 (DS1647)	–	–	–	✓	✓	✓	✓	✓
	SC-SENS 4/1 [3] (DS1626)	✓	✓	✓	✓	✓	✓	✓	✓
	SC-CCDI 6/1 (DS1637)	–	–	–	✓	✓	✓	✓	✓
	SC-EGOS 2/1 (DS1634) [4]	–	–	–	✓	✓	✓	✓	–

[1] You can insert a maximum of 4 SC-AI 4/1 modules in a unit to avoid exceeding the unit's maximum possible power consumption.

[2] The SC-AI 10/1 has 10 channels and requires two adjacent slots. The first slot has to process 8 channels and the second slot 2 channels. You can mount it on slots SC1 … SC2, SC3 … SC4, and SC5 … SC6.

[3] The SC-SENS 4/1 module is a sensor supply module and does not have internal signal connections to the unit's carrier board. Thus, you can insert an SC-SENS 4/1 module in any available slot. You can insert a maximum of 2 SC-SENS 4/1 modules in a unit to avoid exceeding the unit's maximum possible power consumption.

[4] If you use the SC-EGOS 2/1 module, the required current for heating the lambda probe must be provided by an additional RapidPro Power Unit where a specific PS module must be installed, for example, a low side driver module (PS-LSD 6/1) or a high side driver module (PS-HSD 6/1). For details, refer to Connection to Lambda Probes in the RapidPro System – Installation and Configuration Reference.

If you have an SC module which is not listed in the table above, choose a slot that suits the module's signals needed in your application. The table below gives you the information on the slots' signals:

Slot	Signals
SC1	8 x analog
SC2	4 x analog
SC3	8 x analog
SC4	4 x analog/8 x digital
SC5	8 x analog/8 x digital
SC6	4 x analog/8 x digital
SC7	4 x analog/8 x digital
SC8	8 x digital

Installation of SC Modules in an SC Unit that is Part of a Stack with UCB

Where to go from here

Information in this section

Stack with Control Unit (MPC565) and SC Unit – RoutingID 16553 for SC-TC 8/1 Module....49

Stack with UCB Consisting of Control Unit (MPC565), SC Unit, and Power Unit – RoutingID 28555 for SC-TC 8/1 Module....51

Stack with Control Unit (MPC565), Power, and SC Unit – RoutingID 11550....52

Stack with Control Unit (MPC565), SC Unit, and Power Unit – RoutingID 50551 for SC-TC 8/1 Module....54

Stack with Control Unit (MPC565), Two SC Units, and Power Unit – RoutingID 53202 for SC-TC 8/1 Module....55

Stack with Control Unit (MPC565), Power, and SC Unit – RoutingID 29752 for Engine Control....57

Stack with Control Unit (MPC565), Power Unit, and SC Unit – RoutingID 61376 for PS-DINJ 2/1 Module....59

Stack with Control Unit (MPC565), two Power Units, and SC Unit – RoutingID 65422 for PS-DINJ 2/1 Module....60

Stack with Control Unit (MPC565), Two SC Units, and Power Unit – RoutingID 10243 for SC-TC 8/1 Module and PS-DINJ 2/1 Module....62

Stack with Control Unit (MPC565) and SC Unit – RoutingID 16553 for SC-TC 8/1 Module

Objective

The routing code with RoutingID 16553 applies to the following configuration:

Stack with UCB consisting of:

- Control Unit with MC-MPC565 1/1 module (layer 1)
- SC Unit (layer 2) with one or more SC-TC 8/1 modules

Note

The routing of the Control Unit in this stack is identical to the routing of a single Control Unit with RoutingID 16384. Thus, an existing single Control Unit can be easily extended with an SC Unit with SC-TC 8/1 module(s) without changing the assembly of the other modules in the unit.

Note

If you rearrange the modules on the carrier boards contrary to the table below, the routing code stored in the units has to be modified by dSPACE.

Installing or rearranging an SC-UHEGO 2/1 module (DS1639)

If you want to install or rearrange an SC-UHEGO 2/1 module (DS1639) in a single unit or a stack with UCB, you need a custom-built routing code. Contact dSPACE for an appropriate routing code.

RoutingID 16553 – SC Unit

The following table shows which SC modules can be installed on which slot of the SC Unit, and which suit the specifics of the Control Unit's microcontroller channels you need in your application.

Stack with UCB (RoutingID 16553)	Slot	Signal	MPC565 Channel	Possible Module
SC Unit (layer 2) 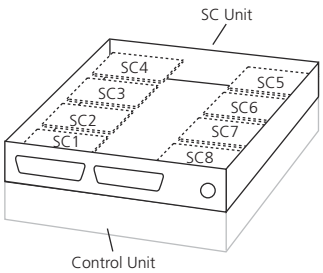 	SC1	8 x MIOS (PWM)	1 … 8	▪ SC-TC 8/1 [1] (DS1638) ▪ SC-DO 8/1 (DS1646) ▪ SC-DO 8/2 (DS1647) ▪ SC-SENS 4/1 [2] (DS1626)
	SC2	8 x MIOS (DASM)	1 … 8	▪ SC-TC 8/1 [1] (DS1638) ▪ SC-DI 8/1 (DS1642) ▪ SC-CCDI 6/1 (DS1637) ▪ SC-SENS 4/1 [2] (DS1626)
	SC3	7 x TPU	TPU_A: 7 TPU_B: 11 … 16	▪ SC-TC 8/1 [1] (DS1638) ▪ SC-DI 8/1 (DS1642) ▪ SC-DO 8/1 [3] (DS1646) ▪ SC-DO 8/2 [3] (DS1647) ▪ SC-CCDI 6/1 (DS1637) ▪ SC-SENS 4/1 [2] (DS1626)
		1 x SDI [4]	1	
	SC4	8 x TPU	TPU_C: 1 … 8	▪ SC-DI 8/1 (DS1642) ▪ SC-DO 8/1 (DS1646) ▪ SC-DO 8/2 (DS1647) ▪ SC-CCDI 6/1 (DS1637) ▪ SC-SENS 4/1 [2] (DS1626)
	SC5	–	–	▪ SC-TC 8/1 [1] (DS1638) ▪ SC-SENS 4/1 [2] (DS1626)
	SC6	–	–	
	SC7	1 x TPU	TPU_A: 8	
		1 x SDI [4]	2	
	SC8	8 x TPU	TPU_C: 9 … 16	▪ SC-DI 8/1 (DS1642)

Stack with UCB (RoutingID 16553)	Slot	Signal	MPC565 Channel	Possible Module
				▪ SC-DO 8/1 (DS1646) ▪ SC-DO 8/2 (DS1647) ▪ SC-CCDI 6/1 (DS1637) ▪ SC-SENS 4/1 [2] (DS1626)

[1] The SC-TC 8/1 requires three adjacent slots. You can mount it on the SC Unit's slots SC1 … SC3, and on slots SC5 … SC7. The module uses only the available I/O signals of slot SC3 or of slot SC7. The I/O signals of slots SC1 and SC2 (or SC5 and SC6) are not connected to the module.

[2] The SC-SENS 4/1 module is a sensor supply module and does not have signal connections to the Control Unit's microcontroller channels. Thus, you can insert an SC-SENS 4/1 module in any available slot. You can insert a maximum of 2 SC-SENS 4/1 modules in a unit to avoid exceeding the unit's maximum possible power consumption.

[3] If an SC-DO 8/1 or SC-DO8/2 module is inserted in the SC Unit's third slot (SC3) you can use only a maximum of 6 module output channels.

[4] Serial Digital Interface for a connection to/from the microcontroller of the Control Unit.

Stack with UCB Consisting of Control Unit (MPC565), SC Unit, and Power Unit – RoutingID 28555 for SC-TC 8/1 Module

Objective

The routing code with RoutingID 28555 applies to the following configuration:

Stack with UCB consisting of:

- Control Unit with MC-MPC565 1/1 module (layer 1)
- SC Unit (layer 2) with one or more SC-TC 8/1 modules
- Power Unit (layer 3)

Note

The routing of the Control Unit and the Power Unit in this stack is identical to the routing of the double stack consisting of Control and Power Unit with RoutingID 35429. Thus, an existing double stack can be easily extended with an SC Unit with SC-TC 8/1 module(s) without changing the assembly of the other modules in the stack.

Note

If you rearrange the modules on the carrier boards contrary to the table below, the routing code stored in the units has to be modified by dSPACE.

Installing or rearranging an SC-UHEGO 2/1 module (DS1639)

If you want to install or rearrange an SC-UHEGO 2/1 module (DS1639) in a single unit or a stack with UCB, you need a custom-built routing code. Contact dSPACE for an appropriate routing code.

RoutingID 28555 – SC Unit

The following table shows which SC modules can be installed on which slot of the unit, and which suit the specifics of the Control Unit's microcontroller channels you need in your application.

Stack with UCB (RoutingID 28555)	Slot	Signal	MPC565 Channel	Possible Module
SC Unit (layer 2) 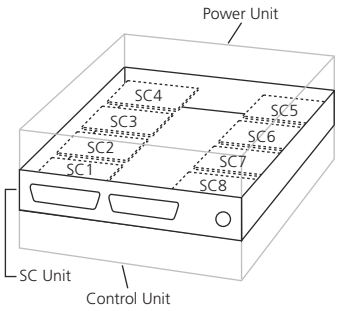	SC1	–	–	▪ SC-TC 8/1 [1] (DS1638) ▪ SC-SENS 4/1 [2] (DS1626)
	SC2	–	–	
	SC3	1 x TPU	TPU_A: 7	
		1 x SDI [3]	1	
	SC4	8 x MIOS (PWM)	1 … 8	▪ SC-DO 8/1 (DS1646) ▪ SC-DO 8/2 (DS1647) ▪ SC-SENS 4/1 [2] (DS1626)
	SC5	–	–	▪ SC-TC 8/1 [1] (DS1638) ▪ SC-SENS 4/1 [2] (DS1626)
	SC6	–	–	
	SC7	1 x TPU	TPU_A: 8	
		1 x SDI [3]	2	
	SC8	4 x bit I/O	37 … 40	▪ SC-DI 8/1 (DS1642) ▪ SC-DO 8/1 (DS1646) ▪ SC-DO 8/2 (DS1647) ▪ SC-SENS 4/1 [2] (DS1626) ▪ SC-CCDI 6/1 (DS1637)
		4 x MIOS (DASM)	1 … 4	

[1] The SC-TC 8/1 requires three adjacent slots. You can mount it on the SC Unit's slots SC1 … SC3, and on slots SC5 … SC7. The module uses only the available I/O signals of slot SC3 or of slot SC7. The I/O signals of slots SC1 and SC2 (or SC5 and SC6) are not connected to the module.

[2] The SC-SENS 4/1 module is a sensor supply module and does not have signal connections to the Control Unit's microcontroller channels. Thus, you can insert an SC-SENS 4/1 module in any available slot. You can insert a maximum of 2 SC-SENS 4/1 modules in a unit to avoid exceeding the unit's maximum possible power consumption.

[3] Serial Digital Interface for a connection to/from the microcontroller of the Control Unit.

Stack with Control Unit (MPC565), Power, and SC Unit – RoutingID 11550

Objective

Which SC module can be installed on which slot of an SC Unit that builds a stack with UCB containing a Control Unit (MPC565) and a Power Unit is defined via routing code.

Note

If you use a different arrangement of modules to that shown in the tables below, the routing code stored in the unit has to be modified by dSPACE.

Installing or rearranging an SC-UHEGO 2/1 module (DS1639)

If you want to install or rearrange an SC-UHEGO 2/1 module (DS1639) in a single unit or a stack with UCB, you need a custom-built routing code. Contact dSPACE for an appropriate routing code.

RoutingID 11550 – SC Unit

The routing code with the RoutingID 11550 is valid only if the stack consists of a Control Unit with MC-MPC565 1/1 module (layer 1), SC Unit (layer 2), and a Power Unit (layer 3).

The following table shows which SC modules can be installed on which slot of the SC Unit and suit the specifics of the Control Unit's microcontroller channels you need in your application.

Stack with UCB (RoutingID 11550)	Slot	Signal	MPC565 Channel	Possible Module
SC Unit (layer 2) 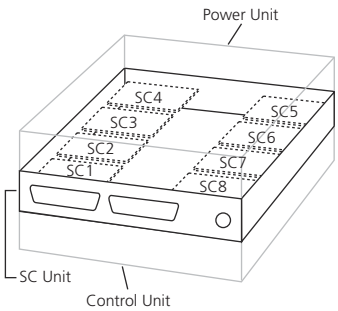	SC1	8 x MIOS (PWM)	1 … 8	▪ SC-DO 8/1 [1] (DS1646) ▪ SC-DO 8/2 [1] (DS1647) ▪ SC-SENS 4/1 [2] (DS1626)
	SC2	8 x MIOS (DASM)	1 … 8	▪ SC-DI 8/1 (DS1642) ▪ SC-CCDI 6/1 (DS1637) ▪ SC-SENS 4/1 [2] (DS1626)
	SC3	4 x bit I/O	37 … 40	▪ SC-DI 8/1 (DS1642) ▪ SC-DO 8/1 [1] (DS1646) ▪ SC-DO 8/2 [1] (DS1647) ▪ SC-SENS 4/1 [2] (DS1626) ▪ SC-CCDI 6/1 (DS1637)
		2 x MIOS (DASM)	9 … 10	
		2 x TPU	TPU_A: 7 … 8	
	SC4	4 x analog	13 … 16	▪ SC-AI 4/1 [3] (DS1631) ▪ SC-SENS 4/1 [2] (DS1626)
	SC5	8 x analog	17 … 24	▪ SC-AI 4/1 [3] (DS1631) ▪ SC-AI 10/1 [4] (DS1633) ▪ SC-SENS 4/1 [2] (DS1626)
	SC6	4 x analog	25 … 28	
	SC7	8 x analog	29 … 36	
	SC8	4 x analog	37 … 40	

[1] If an SC-DO 8/1 or SC-DO 8/2 module is inserted in the Control Unit's first slot (SC1) or in the SC Unit's third slot (SC3) you can use only a maximum of 6 module output channels.

[2] The SC-SENS 4/1 module is a sensor supply module and does not have signal connections to the Control Unit's microcontroller channels. Thus, you can insert an SC-SENS 4/1 module in any available slot. You can insert a maximum of 2 SC-SENS 4/1 modules in a unit to avoid exceeding the unit's maximum possible power consumption.

[3] You can insert a maximum of 4 SC-AI 4/1 modules in a unit to avoid exceeding the unit's maximum possible power consumption.

[4] The SC-AI 10/1 has 10 channels and requires two adjacent slots. The first slot has to process 8 channels and the second slot 2 channels. You can mount it on slots SC5 … SC6, and SC7 … SC8.

Stack with Control Unit (MPC565), SC Unit, and Power Unit – RoutingID 50551 for SC-TC 8/1 Module

Objective

The routing code with RoutingID 50551 applies to the following configuration:

Stack with UCB consisting of:

- Control Unit with MC-MPC565 1/1 module (layer 1)
- SC Unit (layer 2) with one or more SC-TC 8/1 modules
- Power Unit (layer 3)

Note

The routing of the Control Unit and the Power Unit in this stack is identical to the routing of the triple stack consisting of Control Unit, SC Unit, and Power Unit with RoutingID 11550. Thus, the SC Unit of an existing triple stack can be easily replaced by an SC Unit with SC-TC 8/1 module(s) without changing the assembly of the other modules in the stack.

Note

If you rearrange the modules on the carrier boards contrary to the table below, the routing code stored in the units has to be modified by dSPACE.

Installing or rearranging an SC-UHEGO 2/1 module (DS1639)

If you want to install or rearrange an SC-UHEGO 2/1 module (DS1639) in a single unit or a stack with UCB, you need a custom-built routing code. Contact dSPACE for an appropriate routing code.

RoutingID 50551 – SC Unit

The following table shows which SC modules can be installed on which slot of the unit, and which suit the specifics of the Control Unit's microcontroller channels you need in your application.

Stack with UCB (RoutingID 50551)	Slot	Signal	MPC565 Channel	Possible Module
SC Unit (layer 2) 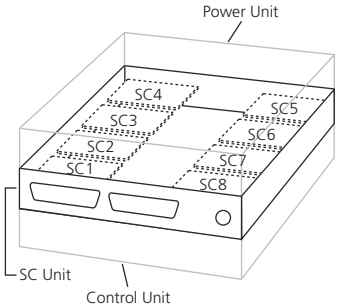	SC1	8 x MIOS (PWM)	1 … 8	▪ SC-DO 8/1 (DS1646) ▪ SC-DO 8/2 (DS1647) ▪ SC-SENS 4/1 [1] (DS1626)
	SC2	8 x MIOS (DASM)	1 … 8	▪ SC-DI 8/1 (DS1642) ▪ SC-CCDI 6/1 (DS1637) ▪ SC-SENS 4/1 [1] (DS1626)
	SC3	4 x bit I/O	37 … 40	▪ SC-DI 8/1 (DS1642) ▪ SC-DO 8/1 [2] (DS1646) ▪ SC-DO 8/2 [2] (DS1646) ▪ SC-SENS 4/1 [1] (DS1626) ▪ SC-CCDI 6/1 (DS1637)
		2 x MIOS (DASM)	9 … 10	
	SC4	4 x analog	13 … 16	▪ SC-AI 4/1 [3] (DS1631) ▪ SC-SENS 4/1 [1] (DS1626)
	SC5	8 x analog	17 … 24	▪ SC-TC 8/1 [4] (DS1638) ▪ SC-AI 4/1 [3] (DS1631) ▪ SC-AI 10/1 [5] (DS1633) ▪ SC-SENS 4/1 [1] (DS1626)
	SC6	4 x analog	25 … 28	
	SC7	8 x analog	29 … 36	
		1 x TPU	TPU_A: 8	
		1 x SDI [6]	2	
	SC8	4 x analog	37 … 40	▪ SC-AI 4/1 [3] (DS1631) ▪ SC-AI 10/1 [5] (DS1633) ▪ SC-SENS 4/1 [1] (DS1626)

[1] The SC-SENS 4/1 module is a sensor supply module and does not have signal connections to the Control Unit's microcontroller channels. Thus, you can insert an SC-SENS 4/1 module in any available slot. You can insert a maximum of 2 SC-SENS 4/1 modules in a unit to avoid exceeding the unit's maximum possible power consumption.

[2] If an SC-DO 8/1 or SC-DO 8/2 module is inserted in the SC Unit's third slot (SC3) you can use only a maximum of 6 module output channels.

[3] You can insert a maximum of 4 SC-AI 4/1 modules in a unit to avoid exceeding the unit's maximum possible power consumption.

[4] The SC-TC 8/1 requires three adjacent slots. You can mount it on the SC Unit's slots SC5 … SC7. The module uses only the available I/O signals of slot SC7. The I/O signals of slots SC5 and SC6 are not connected to the module.

[5] The SC-AI 10/1 has 10 channels and requires two adjacent slots. The first slot has to process 8 channels and the second slot 2 channels. You can mount it on slots SC5 … SC6, and SC7 … SC8.

[6] Serial Digital Interface for a connection to/from the microcontroller of the Control Unit.

Stack with Control Unit (MPC565), Two SC Units, and Power Unit – RoutingID 53202 for SC-TC 8/1 Module

Objective

The routing code with RoutingID 53202 applies to the following configuration:

Stack with UCB consisting of:

- Control Unit with MC-MPC565 1/1 module (layer 1)
- SC Unit 1 (layer 2)

- SC Unit 2 (layer 3) with one or more SC-TC 8/1 modules
- Power Unit (layer 4)

Note

The routing of the Control Unit and the Power Unit in this stack is identical to the routing of the triple stack consisting of Control Unit, SC Unit, and Power Unit with RoutingID 11550. Thus, an existing triple stack can be easily extended with an SC Unit with SC-TC 8/1 module(s) without changing the assembly of the other modules in the stack.

Note

If you rearrange the modules on the carrier boards contrary to the table below, the routing code stored in the units has to be modified by dSPACE.

Installing or rearranging an SC-UHEGO 2/1 module (DS1639)

If you want to install or rearrange an SC-UHEGO 2/1 module (DS1639) in a single unit or a stack with UCB, you need a custom-built routing code. Contact dSPACE for an appropriate routing code.

RoutingID 53202 – SC Units

The following table shows which SC modules can be installed on which slot of the SC Units, and which suit the specifics of the Control Unit's microcontroller channels you need in your application.

Stack with UCB (RoutingID 53202)	Slot	Signal	MPC565 Channel	Possible Module
SC Unit 1 (layer 2) 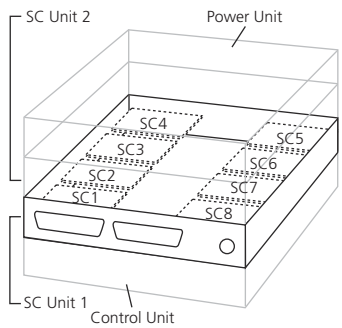 	SC1	8 x MIOS (PWM)	1 … 8	▪ SC-DO 8/1 (DS1646) ▪ SC-DO 8/2 (DS1647) ▪ SC-SENS 4/1 [1] (DS1626)
	SC2	8 x MIOS (DASM)	1 … 8	▪ SC-DI 8/1 (DS1642) ▪ SC-CCDI 6/1 (DS1637) ▪ SC-SENS 4/1 [1] (DS1626)
	SC3	4 x bit I/O	37 … 40	▪ SC-DI 8/1 (DS1642) ▪ SC-DO 8/1 [2] (DS1646) ▪ SC-DO 8/2 [2] (DS1647) ▪ SC-SENS 4/1 [1] (DS1626) ▪ SC-CCDI 6/1 (DS1637)
		2 x MIOS (DASM)	9 … 10	
	SC4	4 x analog	13 … 16	▪ SC-AI 4/1 [3] (DS1631) ▪ SC-SENS 4/1 [1] (DS1626)
	SC5	8 x analog	17 … 24	▪ SC-AI 4/1 [3] (DS1631) ▪ SC-AI 10/1 [4] (DS1633) ▪ SC-SENS 4/1 [1] (DS1626)
	SC6	4 x analog	25 … 28	
	SC7	8 x analog	29 … 36	
	SC8	4 x analog	37 … 40	

Stack with UCB (RoutingID 53202)	Slot	Signal	MPC565 Channel	Possible Module
SC Unit 2 (layer 3) 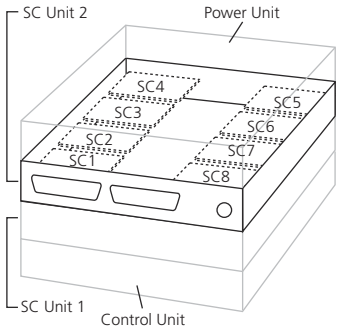	SC1	–	–	▪ SC-TC 8/1 [5] (DS1638) ▪ SC-SENS 4/1 [1] (DS1626)
	SC2	–	–	
	SC3	1 x TPU	TPU_A: 7	
		1 x SDI [6]	1	
	SC4	–	–	▪ SC-SENS 4/1 [1] (DS1626)
	SC5	–	–	▪ SC-TC 8/1 [5] (DS1638) ▪ SC-SENS 4/1 [1] (DS1626)
	SC6	–	–	
	SC7	1 x TPU	TPU_A: 8	
		1 x SDI [6]	2	
	SC8	–	–	▪ SC-SENS 4/1 [1] (DS1626)

[1] The SC-SENS 4/1 module is a sensor supply module and does not have signal connections to the Control Unit's microcontroller channels. Thus, you can insert an SC-SENS 4/1 module in any available slot. You can insert a maximum of 2 SC-SENS 4/1 modules in a unit to avoid exceeding the unit's maximum possible power consumption.

[2] If an SC-DO 8/1 or SC-DO 8/2 module is inserted in the SC Unit's third slot (SC3) you can use only a maximum of 6 module output channels.

[3] You can insert a maximum of 4 SC-AI 4/1 modules in a unit to avoid exceeding the unit's maximum possible power consumption.

[4] The SC-AI 10/1 has 10 channels and requires two adjacent slots. The first slot has to process 8 channels and the second slot 2 channels. You can mount it on slots SC5 … SC6, and SC7 … SC8.

[5] The SC-TC 8/1 requires three adjacent slots. You can mount it on the SC Unit's slots SC1 … SC3, and on slots SC5 … SC7. The module uses only the available I/O signals of slot SC3 or of slot SC7. The I/O signals of slots SC1 and SC2 (or SC5 and SC6) are not connected to the module.

[6] Serial Digital Interface for a connection to/from the microcontroller of the Control Unit.

Stack with Control Unit (MPC565), Power, and SC Unit – RoutingID 29752 for Engine Control

Objective

Which SC module can be installed on which slot of an SC Unit that builds a stack with UCB containing a Control Unit (MPC565) and a Power Unit is defined via routing code that is optimized for engine control.

Note

If you use a different arrangement of modules to that shown in the tables below, the routing code stored in the unit has to be modified by dSPACE.

Installing or rearranging an SC-UHEGO 2/1 module (DS1639)

If you want to install or rearrange an SC-UHEGO 2/1 module (DS1639) in a single unit or a stack with UCB, you need a custom-built routing code. Contact dSPACE for an appropriate routing code.

RoutingID 29752 – SC Unit – engine control

The routing code with the RoutingID 29752 is valid only if the stack consists of a Control Unit with MC-MPC565 1/1 module (layer 1), SC Unit (layer 2), and a Power Unit (layer 3). The following table shows which SC modules can be installed on which slot of the SC Unit and suit the specifics of the Control Unit's microcontroller channels you need in your application.

Stack with UCB (RoutingID 29752) – Engine Control	Slot	Signal	MPC565 Channel	Possible Module
SC Unit (layer 2) 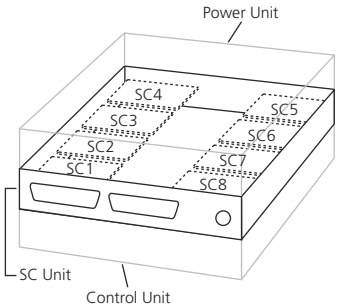	SC1	4 x analog	11 … 14	▪ SC-AI 4/1 (DS1631) ▪ SC-SENS 4/1 [1] (DS1626)
	SC2	–	–	▪ SC-SENS 4/1 [1] (DS1626)
	SC3	8 x MIOS (DASM)	1 … 8	▪ SC-AI 4/1 (DS1631) ▪ SC-AI 10/1 [2] (DS1633) ▪ SC-DI 8/1 (DS1642) ▪ SC-CCDI 6/1 (DS1637) ▪ SC-SENS 4/1 [1] (DS1626)
		8 x analog	15 … 22	
	SC4	2 x MIOS (DASM)	9, 10	▪ SC-AI 10/1 [2] (DS1633) ▪ SC-DI 8/1 [3] (DS1642) ▪ SC-DO 8/1 [4] (DS1646) ▪ SC-DO 8/2 [4] (DS1647) ▪ SC-CCDI 6/1 (DS1637) ▪ SC-SENS 4/1 [1] (DS1626)
		4 x bit I/O	23, 24, 31, 32	
		2 x analog	23 … 24	
	SC5	6 x TPU, used as ignition signals	TPU_B: 4 … 9	▪ SC-DI 8/1 [3] (DS1642) ▪ SC-DO 8/1 (DS1646) ▪ SC-DO 8/2 (DS1647) ▪ SC-CCDI 6/1 [5] (DS1637) ▪ SC-SENS 4/1 [1] (DS1626)
		2 x TPU	TPU_B: 10, 11	
	SC6	4 x MIOS (PWM)	9 … 12	
		4 x bit I/O	19 … 22	
	SC7	2 x MIOS (PWM)	6 … 7	
		6 x bit I/O	15, 16, 37 … 40	
	SC8	5 x TPU	TPU_C: 8 … 12	
		3 x bit I/O	17, 18, 25	

[1] The SC-SENS 4/1 module is a sensor supply module and does not have signal connections to the Control Unit's microcontroller channels. Thus, you can insert an SC-SENS 4/1 module in any available slot. You can insert a maximum of 2 SC-SENS 4/1 modules in a unit to avoid exceeding the unit's maximum possible power consumption.

[2] The SC-AI 10/1 has 10 channels and requires two adjacent slots. The first slot has to process 8 channels and the second slot 2 channels. You can mount it on the Control Unit's slots SC5 … SC6, and on the SC Unit's slots SC3 … SC4.

[3] If an SC-DI 8/1 module is inserted in the SC Unit's fourth (SC4) or in the seventh slot (SC7) you can use only a maximum of 6 module input channels, inserted in the SC Unit's sixth slot (SC6) you can use only a maximum of 4 module input channels.

[4] If an SC-DO 8/1 or SC-DO 8/2 module is inserted in the SC Unit's fourth slot (SC4) you can use only a maximum of 4 module output

[5] If an SC-CCDI 6/1 module is inserted in the SC Unit's sixth slot (SC6) you can use only a maximum of 2 module input channels.

Stack with Control Unit (MPC565), Power Unit, and SC Unit – RoutingID 61376 for PS-DINJ 2/1 Module

Objective

The routing code with the RoutingID 61376 applies the following configuration:

- Engine control use scenario for engines with up to 4 cylinders
- Stack with UCB consisting of:
  - Control Unit with MC-MPC565 1/1 module (layer 1)
  - SC Unit (layer 2)
  - Power Unit (layer 3)
- One or more PS-DINJ 2/1 module

Safety precautions

⚠ WARNING

Hazardous voltages! The PS-DINJ 2/1 module generates output voltages up to 100 V.
Risk of electric shock

- Observe all safety precautions stated before using the PS-DINJ 2/1 module. Refer to Safety Precautions for Using the PS-DINJ 2/1 Module on page 27.

Installing or rearranging an SC-UHEGO 2/1 module (DS1639)

If you want to install or rearrange an SC-UHEGO 2/1 module (DS1639) in a single unit or a stack with UCB, you need a custom-built routing code. Contact dSPACE for an appropriate routing code.

RoutingID 61376 – SC Unit – engine control

The following table shows which SC modules can be installed on which slot of the SC Unit and suit the specifics of the Control Unit's microcontroller channels you need in your application.

Stack with UCB (RoutingID 61376) – Engine Control	Slot	Signal	MPC565 Channel	Possible Module
SC Unit (layer 2) 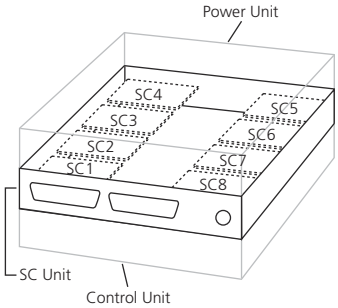	SC1	4 x analog	11 … 14	▪ SC-AI 4/1 (DS1631) ▪ SC-SENS 4/1 [1] (DS1626)
	SC2	–	–	▪ SC-SENS 4/1 [1] (DS1626)
	SC3	8 x MIOS (DASM)	1 … 8	▪ SC-AI 4/1 (DS1631) ▪ SC-AI 10/1 [2] (DS1633) ▪ SC-DI 8/1 (DS1642) ▪ SC-CCDI 6/1 (DS1637) ▪ SC-SENS 4/1 [1] (DS1626)
		8 x analog	15 … 22	
	SC4	2 x MIOS (DASM)	9, 10	▪ SC-AI 10/1 [2] (DS1633) ▪ SC-DI 8/1 [3] (DS1642) ▪ SC-DO 8/1 [4] (DS1646) ▪ SC-DO 8/2 [4] (DS1647) ▪ SC-CCDI 6/1 (DS1637) ▪ SC-SENS 4/1 [1] (DS1626)
		4 x bit I/O	23, 24, 31, 32	
		2 x analog	23 … 24	
	SC5	8 x TPU, used as ignition signals	TPU_B: 4 … 11	▪ SC-DI 8/1 [3] (DS1642) ▪ SC-DO 8/1 (DS1646) ▪ SC-DO 8/2 (DS1647) ▪ SC-CCDI 6/1 [5] (DS1637) ▪ SC-SENS 4/1 [1] (DS1626)
	SC6	4 x MIOS (PWM)	9 … 12	
		4 x bit I/O	19 … 22	
	SC7	2 x MIOS (PWM)	6 … 7	
		6 x bit I/O	15, 16, 37 … 40	
	SC8	5 x TPU	TPU_C: 8 … 11, 16	
		3 x bit I/O	17, 18, 25	

[1] The SC-SENS 4/1 module is a sensor supply module and does not have signal connections to the Control Unit's microcontroller channels. Thus, you can insert an SC-SENS 4/1 module in any available slot. You can insert a maximum of 2 SC-SENS 4/1 modules in a unit to avoid exceeding the unit's maximum possible power consumption.

[2] The SC-AI 10/1 has 10 channels and requires two adjacent slots. The first slot has to process 8 channels and the second slot 2 channels. You can mount it on the Control Unit's slots SC5 … SC6, and on the SC Unit's slots SC3 … SC4.

[3] If an SC-DI 8/1 module is inserted in the SC Unit's fourth (SC4) or in the seventh slot (SC7) you can use only a maximum of 6 module input channels, inserted in the SC Unit's sixth slot (SC6) you can use only a maximum of 4 module input channels.

[4] If an SC-DO 8/1 or SC-DO 8/2 module is inserted in the SC Unit's fourth slot (SC4) you can use only a maximum of 4 module output

[5] If an SC-CCDI 6/1 module is inserted in the SC Unit's sixth slot (SC6) you can use only a maximum of 2 module input channels.

Stack with Control Unit (MPC565), two Power Units, and SC Unit – RoutingID 65422 for PS-DINJ 2/1 Module

Objective

The routing code with the RoutingID 65422 applies the following configuration:

- Engine control use scenario for engines with up to 8 cylinders
- Stack with UCB consisting of:
  - Control Unit with MC-MPC565 1/1 module (layer 1)
  - SC Unit (layer 2)
  - Power Unit 1 (layer 3)
  - Power Unit 2 (layer 4)
- One or more PS-DINJ 2/1 module

Safety precautions

⚠ WARNING

Hazardous voltages! The PS-DINJ 2/1 module generates output voltages up to 100 V.
Risk of electric shock

- Observe all safety precautions stated before using the PS-DINJ 2/1 module. Refer to Safety Precautions for Using the PS-DINJ 2/1 Module on page 27.

Installing or rearranging an SC-UHEGO 2/1 module (DS1639)

If you want to install or rearrange an SC-UHEGO 2/1 module (DS1639) in a single unit or a stack with UCB, you need a custom-built routing code. Contact dSPACE for an appropriate routing code.

RoutingID 65422 – SC Unit – engine control

The following table shows which SC modules can be installed on which slot of the SC Unit and suit the specifics of the Control Unit's microcontroller channels you need in your application.

Stack with UCB (RoutingID 65422) – Engine Control	Slot	Signal	MPC565 Channel	Possible Module
SC Unit (layer 2) 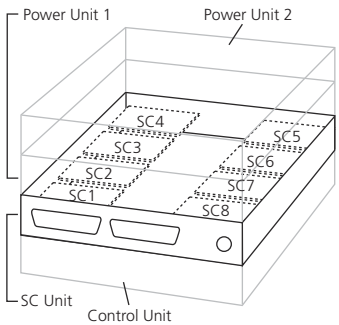 	SC1	4 x analog	11 … 14	▪ SC-AI 4/1 (DS1631) ▪ SC-SENS 4/1 [1] (DS1626)
	SC2	–	–	▪ SC-SENS 4/1 [1] (DS1626)
	SC3	8 x MIOS (DASM)	1 … 8	▪ SC-AI 4/1 (DS1631) ▪ SC-AI 10/1 [2] (DS1633) ▪ SC-DI 8/1 (DS1642) ▪ SC-CCDI 6/1 (DS1637) ▪ SC-SENS 4/1 [1] (DS1626)
		8 x analog	15 … 22	
	SC4	2 x MIOS (DASM)	9, 10	▪ SC-AI 10/1 [2] (DS1633) ▪ SC-DI 8/1 [3] (DS1642) ▪ SC-DO 8/1 [4] (DS1646) ▪ SC-DO 8/2 [4] (DS1647) ▪ SC-CCDI 6/1 (DS1637) ▪ SC-SENS 4/1 [1] (DS1626)
		4 x bit I/O	23, 24, 31, 32	
		2 x analog	23 … 24	
	SC5	8 x TPU	TPU_B: 4 … 11	▪ SC-DI 8/1 [3] (DS1642) ▪ SC-DO 8/1 (DS1646) ▪ SC-DO 8/2 (DS1647) ▪ SC-CCDI 6/1 [5] (DS1637)
	SC6	4 x MIOS (PWM)	9 … 12	

Stack with UCB (RoutingID 65422) – Engine Control	Slot	Signal	MPC565 Channel	Possible Module
		4 x bit I/O	19 … 22	▪ SC-SENS 4/1 [1] (DS1626)
	SC7	2 x MIOS (PWM)	6 … 7	
		6 x bit I/O	15, 16, 37 … 40	
	SC8	5 x TPU	TPU_C: 8 … 11, 16	
		3 x bit I/O	17, 18, 25	

[1] The SC-SENS 4/1 module is a sensor supply module and does not have signal connections to the Control Unit's microcontroller channels. Thus, you can insert an SC-SENS 4/1 module in any available slot. You can insert a maximum of 2 SC-SENS 4/1 modules in a unit to avoid exceeding the unit's maximum possible power consumption.

[2] The SC-AI 10/1 has 10 channels and requires two adjacent slots. The first slot has to process 8 channels and the second slot 2 channels. You can mount it on the Control Unit's slots SC5 … SC6, and on the SC Unit's slots SC3 … SC4.

[3] If an SC-DI 8/1 module is inserted in the SC Unit's fourth (SC4) or in the seventh slot (SC7) you can use only a maximum of 6 module input channels, inserted in the SC Unit's sixth slot (SC6) you can use only a maximum of 4 module input channels.

[4] If an SC-DO 8/1 or SC-DO 8/2 module is inserted in the SC Unit's fourth slot (SC4) you can use only a maximum of 4 module output.

[5] If an SC-CCDI 6/1 module is inserted in the SC Unit's sixth slot (SC6) you can use only a maximum of 2 module input channels.

Stack with Control Unit (MPC565), Two SC Units, and Power Unit – RoutingID 10243 for SC-TC 8/1 Module and PS-DINJ 2/1 Module

Objective

The routing code with the RoutingID 10243 applies the following configuration:

- Engine control use scenario for engines with up to 4 cylinders
- Stack with UCB consisting of:
  - Control Unit with MC-MPC565 1/1 module (layer 1)
  - SC Unit 1 (layer 2)
  - SC Unit 2 (layer 3) with one or more SC-TC 8/1 module
  - Power Unit (layer 4) with one or more PS-DINJ 2/1 module

Note

If you rearrange the modules on the carrier boards contrary to the table below, the routing code stored in the units has to be modified by dSPACE.

Safety precautions

⚠ WARNING

Hazardous voltages! The PS-DINJ 2/1 module generates output voltages up to 100 V.
Risk of electric shock

- Observe all safety precautions stated before using the PS-DINJ 2/1 module. Refer to Safety Precautions for Using the PS-DINJ 2/1 Module on page 27.

Installing or rearranging an SC-UHEGO 2/1 module (DS1639)

If you want to install or rearrange an SC-UHEGO 2/1 module (DS1639) in a single unit or a stack with UCB, you need a custom-built routing code. Contact dSPACE for an appropriate routing code.

RoutingID 10243 – SC Units

The following table shows which SC modules can be installed on which slot of the SC Units, and which suit the specifics of the Control Unit's microcontroller channels you need in your application.

Stack with UCB (RoutingID 10243) – Engine Control	Slot	Signal	MPC565 Channel	Possible Module
SC Unit 1 (layer 2) 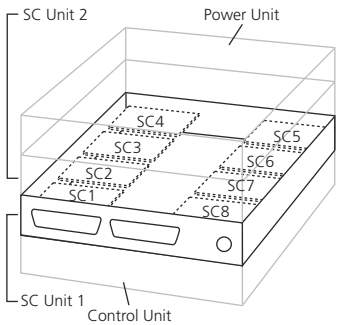	SC1	4 x analog	11 … 14	▪ SC-AI 4/1 (DS1631) ▪ SC-SENS 4/1 [1] (DS1626)
	SC2	–	–	▪ SC-SENS 4/1 [1] (DS1626)
	SC3	8 x MIOS (DASM)	1 … 8	▪ SC-AI 4/1 (DS1631) ▪ SC-AI 10/1 [2] (DS1633) ▪ SC-DI 8/1 (DS1642) ▪ SC-CCDI 6/1 (DS1637) ▪ SC-SENS 4/1 [1] (DS1626)
		8 x analog	15 … 22	
	SC4	2 x MIOS (DASM)	9, 10	▪ SC-AI 10/1 [2] (DS1633) ▪ SC-DI 8/1 [3] (DS1642) ▪ SC-DO 8/1 [4] (DS1646) ▪ SC-DO 8/2 [4] (DS1647) ▪ SC-CCDI 6/1 (DS1637) ▪ SC-SENS 4/1 [1] (DS1626)
		4 x bit I/O	23, 24, 31, 32	
		2 x analog	23 … 24	
	SC5	8 x TPU	TPU_B: 4 … 11	▪ SC-DI 8/1 [3] (DS1642) ▪ SC-DO 8/1 (DS1646) ▪ SC-DO 8/2 (DS1647) ▪ SC-CCDI 6/1 [5] (DS1637) ▪ SC-SENS 4/1 [1] (DS1626)
	SC6	4 x MIOS (PWM)	9 … 12	
		4 x bit I/O	19 … 22	
	SC7	2 x MIOS (PWM)	6 … 7	
		6 x bit I/O	15, 16, 37 … 40	
	SC8	5 x TPU	TPU_C: 8 … 11, 16	
		3 x bit I/O	17, 18, 25	

Stack with UCB (RoutingID 10243) – Engine Control	Slot	Signal	MPC565 Channel	Possible Module
SC Unit 2 (layer 3) 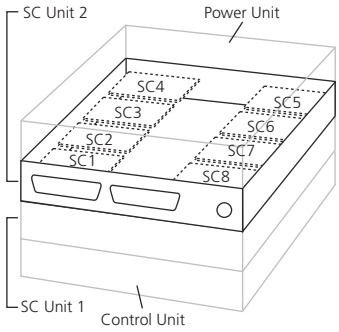	SC1	–	–	▪ SC-TC 8/1 [6] (DS1638) ▪ SC-SENS 4/1 [1] (DS1626)
	SC2	–	–	
	SC3	1 x TPU	TPU_A: 14	
		1 x SDI [7]	2	
	SC4	8 x TPU	TPU_B: 12 ... 15 TPU_C: 12 ... 15	▪ SC-DI 8/1 (DS1642) ▪ SC-DO 8/1 (DS1646) ▪ SC-DO 8/2 (DS1647) ▪ SC-CCDI 6/1 (DS1637) ▪ SC-SENS 4/1 [1] (DS1626)
	SC5	–	–	▪ SC-TC 8/1 [6] (DS1638) ▪ SC-SENS 4/1 [1] (DS1626)
	SC6	–	–	
	SC7	1 x TPU	TPU_A: 15	
		1 x SDI [7]	3	
	SC8	2 x MIOS (PWM)	4, 5	▪ SC-DI 8/1 [8] (DS1642) ▪ SC-DO 8/1 (DS1646) ▪ SC-DO 8/2 (DS1647) ▪ SC-CCDI 6/1 (DS1637) ▪ SC-SENS 4/1 [1] (DS1626)
		4 x TPU	TPU_B: 2, 3 TPU_C: 6, 7	
		2 x bit I/O	5, 6	

[1] The SC-SENS 4/1 module is a sensor supply module and does not have signal connections to the Control Unit's microcontroller channels. Thus, you can insert an SC-SENS 4/1 module in any available slot. You can insert a maximum of 2 SC-SENS 4/1 modules in a unit to avoid exceeding the unit's maximum possible power consumption.

[2] SC Unit 1 (layer 2) - The SC-AI 10/1 has 10 channels and requires two adjacent slots. The first slot has to process 8 channels and the second slot 2 channels. You can mount it on the slots SC3 … SC4.

[3] SC Unit 1 (layer2): Slot SC4 and SC7: You can use only the module input channels 1 ... 6. Slot SC6: You can use only the module input channels 5 ... 8.

[4] SC Unit 1 (layer 2) - If an SC-DO 8/1 or SC-DO 8/2 module is inserted in the fourth slot (SC4) you can use only the module output channels 1 ...4.

[5] SC Unit 1 (layer 2) - If an SC-CCDI 6/1 module is inserted in the sixth slot (SC6) you can use only the input channels 5 and 6.

[6] SC Unit 2 (layer 3) - The SC-TC 8/1 requires three adjacent slots. You can mount it on the SC Unit's slots SC1 … SC3, and on slots SC5 … SC7. The module uses only the available I/O signals of slot SC3 or of slot SC7. The I/O signals of slots SC1 and SC2 (or SC5 and SC6) are not connected to the module.

[7] Serial Digital Interface for a connection to/from the microcontroller of the Control Unit.

[8] SC Unit 2 (layer 3) - slot SC8: You can use only the module input channels 1 ... 6.

Connectors and Pinouts

Objective

The RapidPro SC Unit has connectors on the front and, if used as a single unit, on the rear panel.

Where to go from here

Information in this section

Front Panel Connectors.....65
Rear Panel Connectors.....71

Front Panel Connectors

Objective

The front panel provides I/O connectors and a communication connector.

Connector labels

The labels of the I/O connectors on a front panel always begin with an 'F'. The host PC connector is labeled 'Host PC'. The labels are printed near the connectors at the front of the panel.

Where to go from here

Information in this section

Pinout information and signal specifications of the front panel connectors will help you to build the cable harness.

F1 Connector.....66
F2 Connector.....68
Host PC Connector.....70

F1 Connector

Purpose

The F1 connector is used to obtain access to the I/O signals of the signal conditioning modules inserted in slots 1 … 4, to connect them to external devices. In addition it contains the inputs for the external power supply of the SC Unit.

Pinout

The F1 connector of the SC Unit is a 50-pin, male Sub-D connector. The pin numbering used for Sub-D connectors is not standardized. The following illustration shows the numbering used (front view).

Note

Do not rely on the numbers written on Sub-D connectors.

F1 Connector	Pin	Signal	Pin	Signal	Pin	Signal
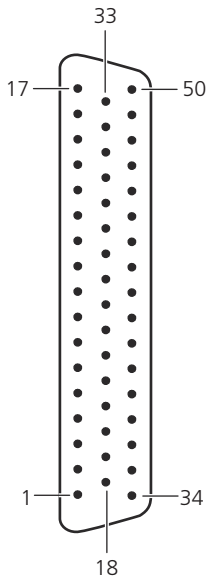	17	–			50	–
	16	–	33	–	49	–
	15	–	32	–	48	–
	14	S4_IO9 [1]	31	–	47	S4_IO7
	13	S4_IO6	30	S4_IO8	46	S4_IO4
	12	S4_IO3	29	S4_IO5	45	S4_IO1
	11	S3_IO9	28	S4_IO2	44	S3_IO7
	10	S3_IO6	27	S3_IO8	43	S3_IO4
	9	S3_IO3	26	S3_IO5	42	S3_IO1
	8	S2_IO9	25	S3_IO2	41	S2_IO7
	7	S2_IO6	24	S2_IO8	40	S2_IO4
	6	S2_IO3	23	S2_IO5	39	S2_IO1
	5	S1_IO9	22	S2_IO2	38	S1_IO7
	4	S1_IO6	21	S1_IO8	37	S1_IO4
	3	S1_IO3	20	S1_IO5	36	S1_IO1
	2	KL15_PU	19	S1_IO2	35	–
	1	UBAT	18	KL15	34	GND

[1] The mapping between a single I/O signal of a module and a pin on the front I/O connector depends on the types of the installed modules and the carrier board slots that they are inserted in. You can get the necessary pinout information by exporting it to a file via ConfigurationDesk for RapidPro. You can read this file via Microsoft™ Excel.

Signal specification

Signal	Description	Specification [1]	
Sx_IOx [2]	Analog or digital input/output signal, depending on the SC module installed on the carrier board.	Input/output voltage range	Depends on SC module
		Max. input/output current	
		Overvoltage protection	
UBAT	External power supply input (for example, from car battery). Note: In a stack with UCB the UBAT and GND pins of the SC Unit need not be connected. The unit gets its supply voltage via the UCB connectors if the UBAT and GND pins of the Control Unit are connected.	Input voltage range	+6 V … +54 V DC [3]
		Standby current (KL15 off)	< 10 mA (typ. 8 mA)
		Power consumption	Without modules: ▪ Approx. 4 W With modules: ▪ Approx. 10 W (depends on the SC modules used)
		Overvoltage protection	Up to ±100 V
GND	Power supply ground line	–	
KL15	Remote control input for switching on the SC Unit with a remote switch, KL15 for example (output of ignition/driving switch). Note: In a stack with UCB the KL15 pin of the SC Unit is enabled. The stack is switched via the Control Unit.	Power-on voltage Power-off voltage	> 4 V < 3 V
		Overvoltage protection	Up to ±100 V
KL15_PU	Power supply output (internally connected to UBAT input via pull-up resistor). The SC Unit operates continuously if KL15_PU is connected directly to the remote control input (KL15). Note: In a stack with UCB the KL15_PU pin of the SC Unit is enabled. The stack is switched via the Control Unit.	–	

[1] Unless stated otherwise, the specifications are valid only if the dSPACE hardware is correctly powered, switched on, and ready for operation.
[2] Sx refers to the slot number on the carrier board and is in the range S1 … S4, IOx refers to the I/O pin of the slot and is in the range IO1 … IO9.
[3] With an additional absolute maximum tolerance of +6 V.

⚠ WARNING

Hazardous voltages

Risk of electric shock and/or damage to the hardware

- Do not connect any high-voltage devices to the I/O connectors of the hardware.
- Do not apply any voltages/currents outside the specified ranges to the connector pins.

Matching connectors

Matching connectors come with the hardware package. If you require additional connectors, you can order them from dSPACE. For details, refer to Hardware Accessories (RapidPro System Hardware Installation Guide 🕮).

F2 Connector

Purpose

The F2 connector is used to obtain access to the I/O signals of the signal conditioning modules inserted in slots 5 … 8, to connect them to external devices.

Pinout

The F2 connector of the SC Unit is a 50-pin, male Sub-D connector. The pin numbering used for Sub-D connectors is not standardized. The following illustration shows the numbering used (front view).

Note

Do not rely on the numbers written on Sub-D connectors.

F2 Connector	Pin	Signal	Pin	Signal	Pin	Signal
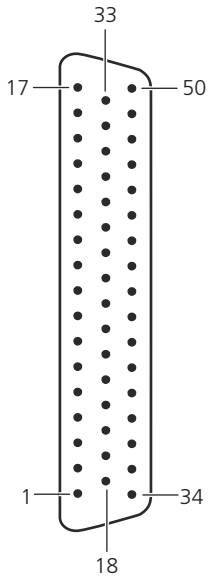	17	–			50	–
	16	–	33	–	49	–
	15	–	32	–	48	–
	14	S8_IO9 [1]	31	–	47	S8_IO7
	13	S8_IO6	30	S8_IO8	46	S8_IO4
	12	S8_IO3	29	S8_IO5	45	S8_IO1
	11	S7_IO9	28	S8_IO2	44	S7_IO7
	10	S7_IO6	27	S7_IO8	43	S7_IO4
	9	S7_IO3	26	S7_IO5	42	S7_IO1
	8	S6_IO9	25	S7_IO2	41	S6_IO7
	7	S6_IO6	24	S6_IO8	40	S6_IO4
	6	S6_IO3	23	S6_IO5	39	S6_IO1
	5	S5_IO9	22	S6_IO2	38	S5_IO7
	4	S5_IO6	21	S5_IO8	37	S5_IO4
	3	S5_IO3	20	S5_IO5	36	S5_IO1
	2	–	19	S5_IO2	35	–
	1	–	18	–	34	–

[1] The mapping between a single I/O signal of a module and a pin on the front I/O connector depends on the types of the installed modules and the carrier board slots that they are inserted in. You can get the necessary pinout information by exporting it to a file via ConfigurationDesk for RapidPro. You can read this file via Microsoft™ Excel.

Signal specification

Signal	Description	Specification [1]	
Sx_IOx [2]	Analog or digital input/output signal, depending on the SC module installed on the carrier board	Input/output voltage range	Depends on SC module
		Max. input/output current	
		Overvoltage protection	

[1] Unless stated otherwise, the specifications are valid only if the dSPACE hardware is correctly powered, switched on, and ready for operation.

[2] Sx refers to the slot number on the carrier board and is in the range S5 … S8, IOx refers to the I/O pin of the slot and is in the range IO1 … IO9.

⚠ WARNING

Hazardous voltages

Risk of electric shock and/or damage to the hardware

- Do not connect any high-voltage devices to the I/O connectors of the hardware.
- Do not apply any voltages/currents outside the specified ranges to the connector pins.

Matching connectors

Matching connectors come with the hardware package. If you require additional connectors, you can order them from dSPACE. For details, refer to Hardware Accessories (RapidPro System Hardware Installation Guide 🕮).

Host PC Connector

Purpose

The host PC connector is used to obtain access to the USB interface of the SC Unit, which is used for module configuration from your host PC.

Note

The host PC connector must not be connected, if the SC Unit is assembled in a stack with UCB.

Pinout and signal description

The host PC connector is a 4-pin, female circular connector. It is color-coded (yellow) and has keyways to avoid false connecting. The following illustration shows the numbering used (front view).

Host PC Connector	Pin	Signal	Description
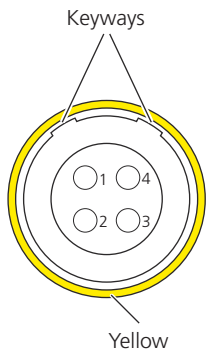	1	VBUS	USB power
	2	D+	USB data – noninverted signal of differential data pair
	3	D–	USB data – inverted signal of differential data pair
	4	GND	USB ground

Matching cable

You can order a matching PC connection cable from dSPACE. For details, refer to Hardware Accessories (RapidPro System Hardware Installation Guide 🕮).

Rear Panel Connectors

Objective

The rear panel with I/O connectors is only needed and mounted if you use the RapidPro SC Unit as a single unit. The I/O connectors are used to obtain access to the signals from/to, for example, a dSPACE RCP system (MicroAutoBox or dSPACE modular system).

Connector labels

The labels of the I/O connectors on a rear panel always begin with an 'R'. They are printed near the connector at the front of the panel.

Where to go from here

Information in this section

Pinout information and signal specifications of the rear panel connectors will help you to build the cable harness.

R1 Connector 71

R2 Connector 73

R1 Connector

Purpose

The R1 connector is used to obtain access to the *digital signals* from/to, for example, a dSPACE RCP system (MicroAutoBox or dSPACE Modular System).

Pinout

The R1 connector is a 50-pin, female Sub-D connector. The pin numbering used for Sub-D connectors is not standardized. The following illustration shows the numbering used (front view).

Note

Do not rely on the numbers written on Sub-D connectors.

R1 Connector	Pin	Signal	Pin	Signal	Pin	Signal
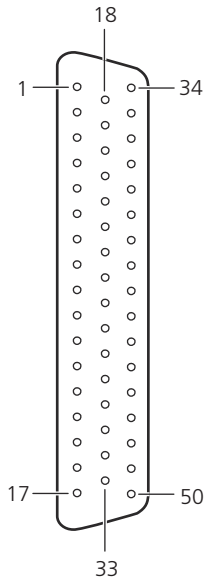	1	DIG_1			34	DIG_34
	2	DIG_2	18	DIG_18	35	DIG_35
	3	DIG_3	19	DIG_19	36	DIG_36
	4	DIG_4	20	DIG_20	37	DIG_37
	5	DIG_5	21	DIG_21	38	DIG_38
	6	DIG_6	22	DIG_22	39	DIG_39
	7	DIG_7	23	DIG_23	40	DIG_40
	8	DIG_8	24	DIG_24	41	DIG_GND
	9	DIG_9	25	DIG_25	42	DIG_GND
	10	DIG_10	26	DIG_26	43	DIG_GND
	11	DIG_11	27	DIG_27	44	DIG_GND
	12	DIG_12	28	DIG_28	45	DIG_GND
	13	DIG_13	29	DIG_29	46	DIG_GND
	14	DIG_14	30	DIG_30	47	SPI_MOSI
	15	DIG_15	31	DIG_31	48	SPI_MISO
	16	DIG_16	32	DIG_32	49	SPI_CK
	17	DIG_17	33	DIG_33	50	SPI_CS

Signal specification

Signal	Description	Specification [1]	
DIG_x [2]	Digital input/output signals	Input voltage range	0 V … +5 V [3]
		Output voltage range	0 … +3.3 V
DIG_GND	Signal return line (ground) for digital signals	–	
SPI_MISO	Serial Peripheral Interface (SPI); data output (master in – slave out)		
SPI_MOSI	Serial Peripheral Interface (SPI); data input (master out – slave in)		
SPI_CK	Serial Peripheral Interface (SPI); clock input		
SPI_CS	Serial Peripheral Interface (SPI); chip select input		

[1] Unless stated otherwise, the specifications are valid only if the dSPACE hardware is correctly powered, switched on, and ready for operation.

[2] x refers to the I/O signal number and is in the range 1 … 40.

[3] A connected MicroAutoBox provides current sources to adapt its signal levels automatically. If you connect other external devices, you can increase the input voltage range to 0 … +15 V (see Adapting Digital Inputs (RapidPro System Hardware Installation Guide 🕮)).

⚠ WARNING

Hazardous voltages
Risk of electric shock and/or damage to the hardware

- Do not connect any high-voltage devices to the I/O connectors of the hardware.
- Do not apply any voltages/currents outside the specified ranges to the connector pins.

Matching connectors

Matching connectors come with the hardware package. If you require additional connectors, you can order them from dSPACE. For details, refer to Hardware Accessories (RapidPro System Hardware Installation Guide 🕮).

Related topics

Basics

Connecting Digital I/O to dSPACE Modular System (RapidPro System Hardware Installation Guide 🕮)

R2 Connector

Purpose

The R2 connector is used to obtain access to the *analog signals* from/to, for example, a dSPACE RCP system (MicroAutoBox or dSPACE Modular System).

Pinout

The R2 connector is a 50-pin, female Sub-D connector. The pin numbering used for Sub-D connectors is not standardized. The following illustration shows the numbering used (front view).

Note

Do not rely on the numbers written on Sub-D connectors.

R2 Connector	Pin	Signal	Pin	Signal	Pin	Signal
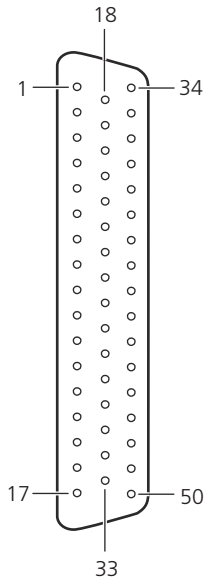	1	ANA_1			34	ANA_34
	2	ANA_2	18	ANA_18	35	ANA_35
	3	ANA_3	19	ANA_19	36	ANA_36
	4	ANA_4	20	ANA_20	37	ANA_37
	5	ANA_5	21	ANA_21	38	ANA_38
	6	ANA_6	22	ANA_22	39	ANA_39
	7	ANA_7	23	ANA_23	40	ANA_40
	8	ANA_8	24	ANA_24	41	ANA_GND
	9	ANA_9	25	ANA_25	42	ANA_GND
	10	ANA_10	26	ANA_26	43	ANA_GND
	11	ANA_11	27	ANA_27	44	ANA_GND
	12	ANA_12	28	ANA_28	45	ANA_GND
	13	ANA_13	29	ANA_29	46	ANA_GND
	14	ANA_14	30	ANA_30	47	ANA_GND
	15	ANA_15	31	ANA_31	48	WDT
	16	ANA_16	32	ANA_32	49	KL15
	17	ANA_17	33	ANA_33	50	ENABLE

Signal specification

Signal	Description	Specification [1]	
ANA_x [2]	Analog input/output signals	Input/output voltage range	–10 V … +10 V
ANA_GND	Signal return line (ground) for analog signals	–	
WDT	Watchdog timer input: If there is no signal, the output drivers of all the installed modules are in shutdown mode. This means all the outputs of the installed modules are switched off. Note: The watchdog function is software-configurable via ConfigurationDesk for RapidPro. By default, the watchdog function is set to off.	Input voltage range	0 V … +5 V [3]
		Signal type	Square-wave signal
		Signal frequency	10 Hz … 100 kHz
ENABLE	Enable/disable input: If this input is unconnected or at low level state, all the outputs of the installed modules are switched off. Note:	Input voltage range	0 V … +5 V DC [3] Thresholds: ▪ On: 2.5 V ▪ Off: 1.5 V

Signal	Description	Specification [1]	
	▪ The ENABLE signal switches the RapidPro unit from idle mode to execution mode. Only in idle mode you can download and configure the hardware. For details, refer to Characteristics of Application States and Operating Modes (ConfigurationDesk for RapidPro - Guide 🕮). ▪ For safety purposes it is recommended to control the ENABLE pin with the RCP system so that the RapidPro hardware cannot be configured unless the application on the RCP system is stopped.	Clamping circuit for protection against overvoltage spikes.	
KL15	Remote control input for switching on the unit with a remote switch, KL15 for example (output of ignition/driving switch).	Power-on voltage Power-off voltage	> 4 V < 3 V
		Overvoltage protection	Up to ±50 V

[1] Unless stated otherwise, the specifications are valid only if the dSPACE hardware is correctly powered, switched on, and ready for operation.
[2] x refers to the I/O signal number and is in the range 1 … 40.
[3] A connected MicroAutoBox provides current sources to adapt its signal levels automatically. If you connect other external devices, you can increase the input voltage range to 0 … +15 V (see Adapting Digital Inputs (RapidPro System Hardware Installation Guide 🕮)).

⚠ WARNING

Hazardous voltages!
Risk of electric shock and/or damage to the hardware.
- Do not connect any high-voltage devices to the I/O connectors of the hardware.
- Do not apply any voltages/currents outside the specified ranges to the connector pins.

Matching connectors

Matching connectors come with the hardware package. If you require additional connectors, you can order them from dSPACE. For details, refer to Hardware Accessories (RapidPro System Hardware Installation Guide 🕮).

Unit in Use

Objective

During operation, the SC Unit indicates its status by status LEDs and temperature sensors.

Where to go from here

Information in this section

Status LEDs.....76
Temperature Sensors.....79

Status LEDs

Purpose of the status LEDs

The RapidPro SC Unit is equipped with six status LEDs on the front panel:

- Four status LEDs indicate faults at the inputs/outputs.
- Two connection status LEDs indicate the status of the communication connection.

Location of the LEDs

The status LEDs 1 … 4 and the connection status LEDs are located on the front panel of each unit as shown in the illustration below.

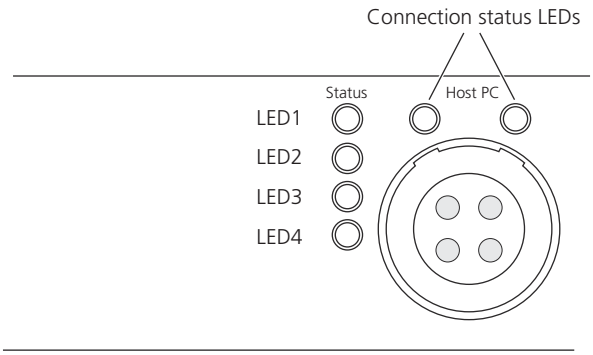

Connection status LEDs

The meanings of the connection status LEDs are as follows:

- Left LED above the connector:

  Lit *green* if the connection is established and the interface is ready for communication.
- Right LED above the connector:

  Flashes *green* if data is being sent or received.

Status LEDs 1 … 4

The display principles of the LEDs 1 … 4 are as follows:

- LED 1 shows the status of the external power supply.
- LED 2 … LED 4 show failures of the RapidPro system or application faults at the devices connected to the RapidPro system.
- LEDs lit *green* show correct behavior.
- LEDs lit *orange* or *red* show incorrect behavior.

The following table shows the faults indicated by the LEDs and the measures for solving the problems.

LED	Display	Description	Remedy
LED 1	Green	The power supply is working correctly.	–
	Orange	Single unit: The external supply voltage is connected but there is no enable signal on the KL15 pin.	Connect KL15 to the external supply voltage or to KL15_PU.
		Stack with UCB: ▪ The external supply voltage is connected but there is no enable signal on the Control Unit's KL15 pin. ▪ The Control Unit has disabled the power supplies of all other stack units.	▪ Connect Control Unit's KL15 to the external supply voltage or to KL15_PU. ▪ –
	Red	The external supply voltage is outside the permitted voltage range.	Apply an external supply voltage to the Control Unit of: +6 V … +54 V DC [1)]
	None	No power is supplied to the unit.	
LED 2	Green	No failure condition detected at the devices connected to the RapidPro hardware.	–
	Orange	A failure condition is detected, for example, overload, no load, overtemperature or short circuit.	▪ Disconnect and reconnect the link between the RapidPro

LED	Display	Description	Remedy
			unit and the connected devices. ▪ Check all signals. The signal levels must be in the specified range. ▪ Reset all diagnostics via ConfigurationDesk for RapidPro.
	Red	Internal memory write or erase failures. The carrier board is operating in shutdown mode. This means module functions are disabled.	–
	None	A failure is indicated by another LED (LED 3 or LED 4 are red).	–
		No power is supplied to the unit.	
LED 3	Green	The routing code of the RapidPro hardware is valid.	–
	Orange	Lights up for approx. 1 minute if you changed or removed modules. If the LED is permanently on, the routing code of the RapidPro hardware is invalid.	▪ Restore the positions of the modules on the carrier board to match the routing code. ▪ Or contact dSPACE to obtain a suitable routing code.
	Red	SPI (Serial Peripheral Interface) communication is faulty.	▪ Check the SPI cabling. A proper ground connection is essential. ▪ Use a low-impedance cable.
		A monitoring failure is detected on the SC Unit (LED 3 and LED 4 are red).	–
	None	A failure is indicated by another LED (LED 2 or LED 4 are red).	–
		No power is supplied to the unit.	
LED 4	Green	All internal supply voltages are in the correct voltage range.	–
	Orange	One of the internal supply voltages is not in the correct range. The carrier board is operating in shutdown mode. This means module functions are disabled.	▪ Remove the modules from the carrier board to localize the error. ▪ If the error is displayed again after restart, the carrier board is defect.

LED	Display	Description	Remedy
			Otherwise a module is defect. ▪ Reset all diagnostics via ConfigurationDesk for RapidPro.
	Red	The communication between the carrier board and the modules is faulty.	–
		A monitoring failure is detected on the SC Unit (LED 3 and LED 4 are red).	–
	None	A failure is indicated by another LED (LED 2 or LED 3 are red).	–
		No power is supplied to the unit.	

[1] With an additional absolute maximum tolerance of +6 V.

Temperature Sensors

Objective

The carrier board of the SC Unit provides four temperature sensors to observe the temperature on the unit's carrier board at several critical locations.

Sensor locations

Top view

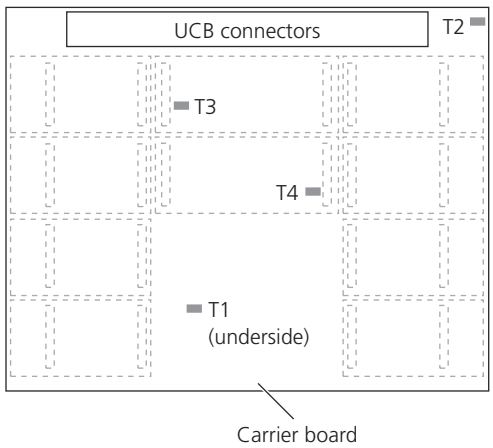

Sensor functions and permitted values

Sensor	Function	Permitted Temperature Range
T1	Monitors the temperature near the on-board microcontroller.	–40 … +105 °C (–40 … +221 °F)
T2	Monitors the housing temperature near the UCB connectors.	
T3	Monitors the temperature near the primary power supply.	–40 … +115 °C (–40 … +239 °F)
T4	Monitors the temperature near the secondary power supply.	

ConfigurationDesk for RapidPro displays the values measured by the temperature sensors. This information can be helpful for error detection. Out-of-range temperatures do not trigger error or diagnostic messages.

Data Sheet

RapidPro SC Unit Data Sheet

Technical data

Parameter		Specification [1)]
General		Compact unit with: ▪ 8 slots for signal conditioning modules (SC modules) ▪ Unit connection bus (UCB) to expand RapidPro SC Unit with RapidPro Control Unit and/or Power Units
Signal Conditioning		▪ Up to 8 SC modules ▪ Up to 8 channels per SC slot ▪ Mixed channel configurations (analog/digital) possible ▪ Support of modules with different form factors (single-slot size and double-slot size)
Software configuration		▪ Configuration of the SC Unit and the SC modules from a host PC via ConfigurationDesk for RapidPro ▪ Displaying module version information, measurement values, module parameters (voltage range, offset, gain etc.) and getting I/O pinout information
Diagnostics		Indication of different states: for example, no load, overload, undervoltage, overtemperature, short circuit
Measurement		▪ Constant measurement of values and states on each channel ▪ Displaying results with ConfigurationDesk for RapidPro ▪ Temperature monitoring at different locations on the carrier board
Modes and functions		▪ Operating mode ▪ Power save mode with wake up function (via KL15 pin) ▪ Remote-controlled operation (external power on/off via remote input) ▪ Powered-off function: The unit is switched off, if the supply voltage drops under a defined voltage level.
Electrical characteristics	Remote-controlled operation	▪ Power-on voltage: > 4 V ▪ Power-off voltage: < 3 V
	Power-up state	Defined "powered-off" state during initialization and booting
	I/O protection	Overvoltage protection for the SC module pins at the front I/O connector depends on the SC modules
	Power supply	▪ +6 V … +54 V DC [2)] ▪ Load dump protection up to +100 V

Parameter		Specification [1]	
		▪ Reverse voltage protection up to –100 V	
	Standby current (KL15 off)	< 10 mA (typ. 8 mA)	
	Power consumption [3] (without modules)	Approx. 4 W	
	Power consumption [3] (with modules)	Approx. 10 W (depends on the SC modules used)	
Mechanical characteristics	Chassis	▪ Aluminum box with cooling fins ▪ Passive cooling, no fan ▪ Easy insertion of modules ▪ Anti-vibration system locks the modules against accidental disconnection ▪ Housing setup allows flexible assembling (stack mount, single unit mount)	
	Connectors	▪ Front panel with: – I/O connectors for connection to external devices (i.e., sensors) – Host PC connector for communication with the host PC (USB1.1 and USB 2.0 compatible) ▪ Rear panel with: – I/O connectors to connect signals to a dSPACE system (only required if the SC Unit is used as a single unit)	
	Status LEDs	▪ 6 LEDs displaying states and errors ▪ Integrated into the front panel	
	Physical size (with cover and base plate)	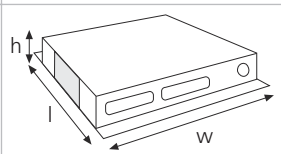	▪ l: 208 mm (8.19 in.) ▪ w: 225 mm (8.86 in.) ▪ h: 36 mm (1.42 in.)
	Physical size (without cover and base plate)	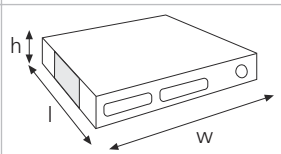	▪ l: 172.5 mm (6.79 in.) ▪ w: 225 mm (8.86 in.) ▪ h: 26 mm (1.02 in.)
	Weight	▪ Approx. 1.5 kg (3.2 lb.) with cover and base plate ▪ Approx. 1.0 kg (2.2 lb.) without cover and base plate	
Environmental conditions	Operating temperature	–40 … +85 °C (–40 … +185 °F) [4]	
	Storage temperature	–65 … +125 °C (–85 … +257 °F)	
	Humidity	0 … 95%, noncondensing	
	Shock	ISO 16750-3:2007 / 4.2.2.	Test conditions: ▪ Linear shock (1/2 sine pulse), 6-axis ▪ 500 m/s^2, 6 ms, 10 pulses per axis

Parameter		Specification [1]	
			▪ Operating
	Vibration	ISO 16750-3:2007 / 4.1.2.4 Test IV	Test conditions: Broad band noise, 2h per axis, RMS-acceleration 27,8 m/s^2
		EN 60068-2-6	Test conditions: ▪ Swept sine, 1 octave per minute, 3-axis test ▪ 5 ... 2000 Hz, up to 5 g, 2 sweeps per axis ▪ Operating
EMC standards		EN 61326-1 Table 2	Immunity standard for industrial environments [5]
		CISPR 11, EN 55011 Group 1, Class A	Emission standard for industrial environments
CE compliance		2014/30/EU (Electromagnetic Compatibility Directive)	

[1] Unless stated otherwise, the specifications are valid only if the dSPACE hardware is correctly powered, switched on, and ready for operation.
[2] With an additional absolute maximum tolerance of +6 V.
[3] Typical value at T_Housing = +25 °C (+77 °F).
[4] The total output capacity of the RapidPro system depends on the modules used and the assembly (single unit or stack). It is limited by the thermal capacity of the housing. As long as the maximum housing temperature T_Housing = +95 °C (+203 °F) is not exceeded, the function of the RapidPro system is guaranteed.
[5] Tested with an I/O cable length < 3 m. Connected cables might affect the specified characteristics due to physical effects such as crosstalk, voltage drops, and influences through electromagnetic fields.

RapidPro Power Unit

Short description

The RapidPro Power Unit is a component of the RapidPro hardware. It is a compact aluminum box that provides slots for power stage modules.

Where to go from here

Information in this section

Unit Overview 86
Information on the unit's features, components, and functionality will help you assess its possible uses.

Suitable Slots for PS Modules 91
The Power Unit provides slots to install power stage modules (PS modules). Which slot you can install which module in, depends on the assembly of your RapidPro hardware.

Connectors and Pinouts 110
Information on the unit's external I/O connectors will help you, for example, to build the cable harness.

Unit in Use 121
You have access to information (i.e., status LEDs, temperatures on the unit) which the unit provides during operation.

Data Sheet 127
The data sheet summarizes the technical data of the Power Unit.

Unit Overview

Objective

The Power Unit consists of an enclosure that provides external connectors and contains a carrier board that has slots, for example, for RapidPro PS modules.

Where to go from here

Information in this section

Unit Features.....86
Housing Components.....87
Carrier Board Components.....88
Block Diagram.....89

Unit Features

Use cases

- Use as single unit to use power stages (without other RapidPro units)
- Use together with the Control Unit, additional SC Units and/or other Power Units as a common system with internal electrical connections

Support of power stage modules

- Up to 48 power driver channels are available per Power Unit
- 6 slots for power stage modules (PS modules) for driving actuators and high current loads
- Support of modules with up to 8 channels per slot
- Support of modules with different shapes (form factors)
- Easy configuration of the module parameters with software and on-board microcontroller

Designed for in-vehicle use

- Wide supply range, reverse- and overvoltage-protected
- Remote control input to switch the unit on or off
- Automotive temperature range
- Locking system for the modules against accidental disconnection

Flexible assembly

The unit can be used either as a single unit or with additional SC Units and/or a Control Unit. You can assemble the units in a stack for use as one physical unit. If the Power Unit is assembled with a Control Unit they have an internal electrical connection via unit connection bus (UCB).

For detailed information, refer to Unit connection bus (UCB) on page 90.

More features

For a complete list of the unit's features, refer to RapidPro Power Unit Data Sheet on page 127.

Housing Components

Objective

The housing of the Power Unit is modular in design, providing access to the input and output signals via its connectors.

Exterior view

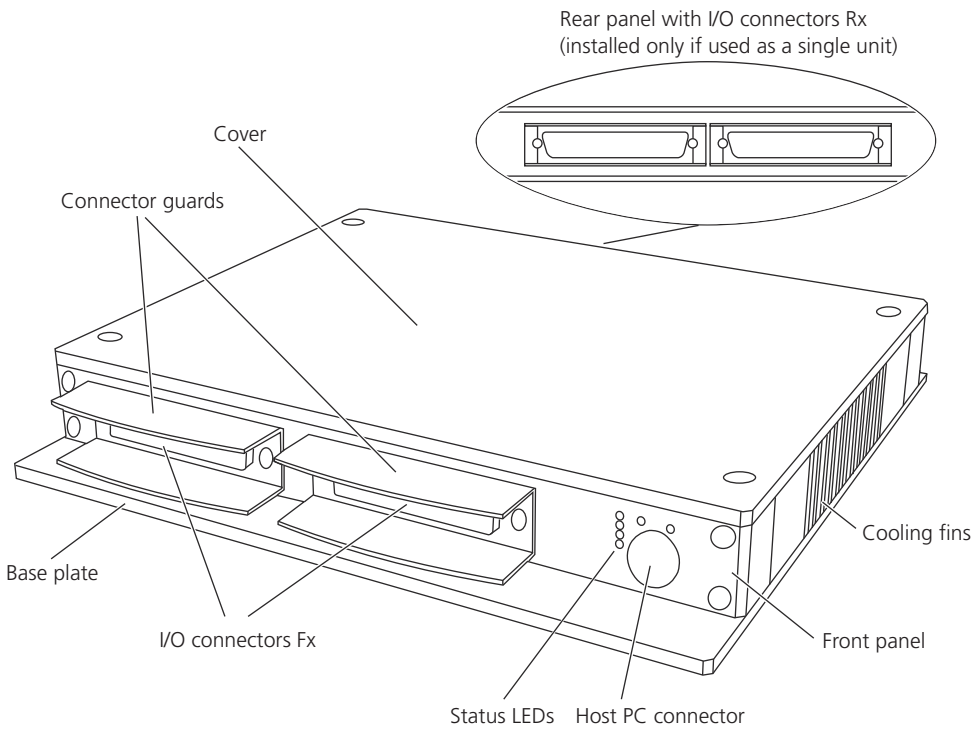

Components and their functions

The *front panel* and the *rear panel* provide different connectors:

- *I/O connectors Fx* provide the connections to the power supply (UBAT) and external devices.
- The *host PC connector* provides the communication with your host PC based on a USB interface. It is used for module configuration and diagnostics, if the unit is used as single unit.
- The *status LEDs* display different states of the Power Unit. They can be used for troubleshooting.

- The *I/O connectors Rx* provide the connection to a dSPACE rapid control prototyping (RCP) system (MicroAutoBox or a dSPACE modular system) and are mounted if the unit is used as single unit.

For detailed information on the connectors, their pinout, and the signal descriptions, refer to Connectors and Pinouts on page 110.

For the meaning of the LEDs, refer to Status LEDs on page 121.

Connector labels

The labels of the I/O connectors on a rear panel always begin with an 'R' and the labels of the I/O connectors on a front panel always begin with an 'F'. The host PC connector is labeled 'Host PC'. The labels are printed near the connectors at the front of the panel.

Carrier Board Components

Objective

The carrier board inside the Power Unit holds different components.

Interior view

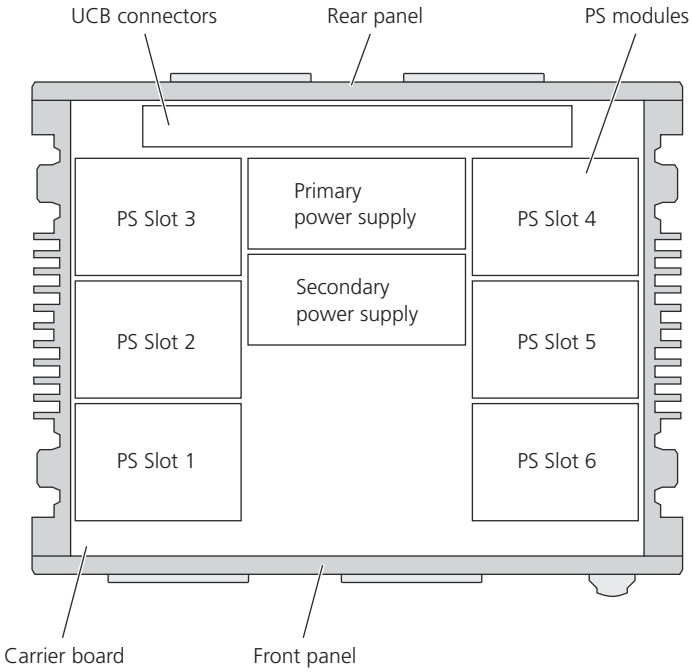

Components and their functions

- The *carrier board* contains a microcontroller (for configuration), a power supply, and 6 *PS slots* for power stage modules.

- The *power supply* of the Power Unit is modular in design. It is split into a primary and a secondary power supply for easy adaptation to different power supply requirements.
- The *UCB connectors* provide the internal connection to other RapidPro units via the unit connection bus (UCB). If you use the Power Unit as a single unit, the UCB connectors provide the connection to I/O connectors Rx on the rear panel.

Block Diagram

Overview illustration

The block diagram shows the functional units and their interrelations.

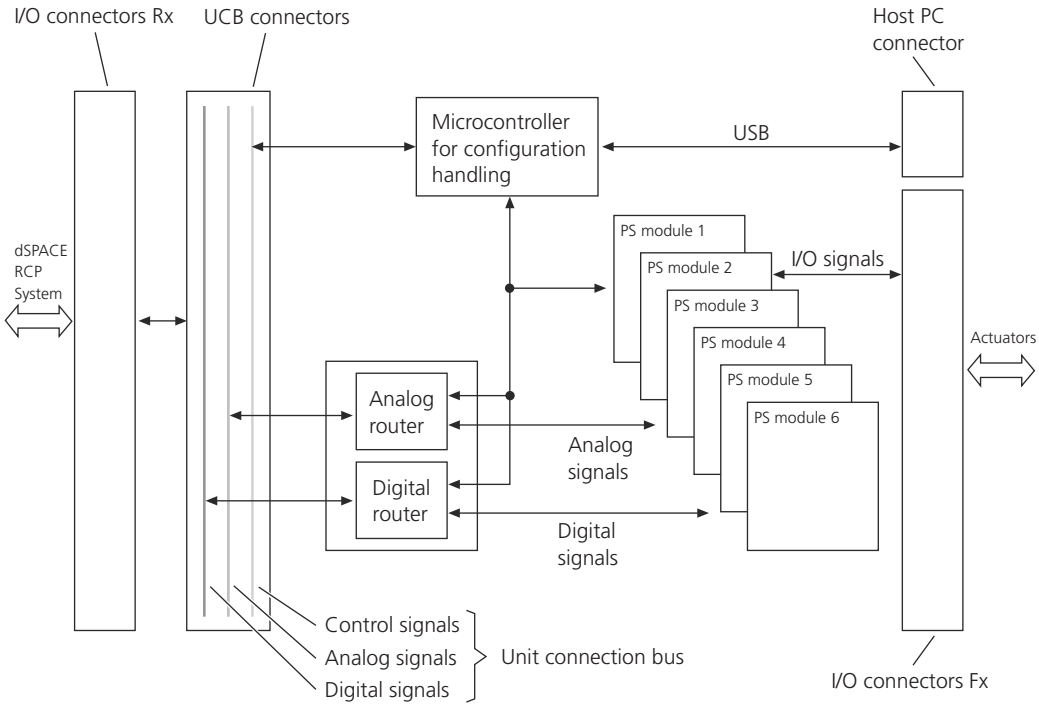

Signal routing

The digital and analog routers are controlled by the on-board microcontroller, which needs routing code (provided by dSPACE) containing pin-mapping information on the installed modules. This routing code defines which PS module can be installed on which slot.

For details, refer to Suitable Slots for PS Modules on page 91.

Unit connection bus (UCB)

The unit connection bus (UCB) includes digital, analog and control signals and is located on the backplane connectors.

- If the unit is used as single unit, the relevant signals of the UCB are available on I/O connectors Rx to connect it to a dSPACE RCP system.
- If one or more Power and/or SC Units are combined with the Control Unit, the UCB is the connection between the units. Additionally the supply voltage (UBAT and GND) connected on the front I/O connector of the Control Unit is passed to the other units via the UCB. In this way the Control Unit powers the internal functions of all units in an assembled stack, for example, for software configuration. However, Power Units in the stack must be connected to the power supply separately to drive loads at their outputs.

Power supply concept for the PS modules

The Power Unit has a control section and a power section to supply the PS modules and the carrier board. The power section has to supply the PS modules with sufficient power to switch loads, etc. The power section is divided into two separate rails, one with slots 1 … 3 and one with slots 4 … 6. Each rail must be connected separately to a voltage supply, for example, UBAT.

Suitable Slots for PS Modules

Objective

If you want to install, change or rearrange RapidPro modules in a single unit or a stack, you have to consider some restrictions.

Definition via routing code

Which module can be installed on which slot is defined via routing code. This code varies according to the assembly (single unit or stack).

The routing code is stored in the specific single unit or stack with UCB. You can identify it by its unique RoutingID, which can be displayed via ConfigurationDesk for RapidPro.

Where to go from here

Information in this section

Installation of PS Modules in a Single Power Unit.....91

Installation of PS Modules in a Power Unit that is part of a Stack with UCB.....93

Installation of PS Modules in a Single Power Unit

Where to go from here

Information in this section

Single Power Unit – RoutingID 44205.....91

Single Power Unit – RoutingID 60766.....92

Single Power Unit – RoutingID 44205

Objective

Which PS module can be installed on which slot of a single Power Unit is defined via the routing code. You can use all available PS modules with this routing code (RoutingID 44205).

RoutingID 44205

The following table shows you which PS modules can be installed on which slot on a single Power Unit using the routing code with RoutingID 44205:

Single Power Unit	Module	PS1	PS2	PS3	PS4	PS5	PS6
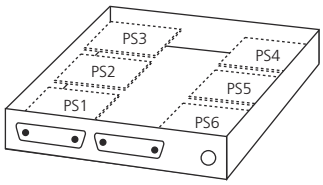	PS-FBD 2/1 (DS1661)	✓	✓	✓	✓	✓	✓
	PS-HSD 6/1 (DS1663)	✓	✓	✓	✓	✓	✓
	PS-LSD 6/1 (DS1662)	✓	✓	✓	✓	✓	✓
	PS-DINJ 2/1 (DS1664)	✓		–	–	✓	
	PS-HCFBD 1/1 [1), 2)] (DS1667)	✓			✓		
	PS-HCHBD 2/1 [1), 2)] (DS1668)	✓			✓		
	PS-HCFBD 1/2 [1)] (DS1767)	✓			✓		
	PS-HCHBD 2/2 [1), 3)] (DS1768)	✓			✓		

1) The PS-HCxBD x/x module requires three adjacent slots. You can mount a module in rail 1 (slots PS1 … PS3) or in rail 2 (slots PS4 … PS6).

2) The PS-HCxBD x/1 module uses only the available I/O signals of slot PS2 (if mounted in rail 1) or of slot PS5 (if mounted in rail 2). The I/O signals of slots PS1 and PS3 (or PS4 and PS5) are not connected to the module.

3) This routing code is only valid for PS-HCHBD 2/2 modules in *General purpose, single channel* or *General purpose, double channel* mode.

If you have a PS module which is not listed in the table above, choose a slot that suits the module's signals needed in your application. The table below gives you the information on the slots' signals:

Slot	Signals
PS1	6 with max. 4 current measurement channels
PS2	
PS3	
PS4	
PS5	8 with max. 4 current measurement channels
PS6	

Single Power Unit – RoutingID 60766

Objective

Which PS module can be installed on which slot of a single Power Unit is defined via the routing code. This routing code (RoutingID 60766) is optimized to the high-current PS modules.

RoutingID 60766

The following table shows you which PS modules can be installed on which slot on a single Power Unit using the routing code with RoutingID 60766:

Single Power Unit	Module	PS1	PS2	PS3	PS4	PS5	PS6
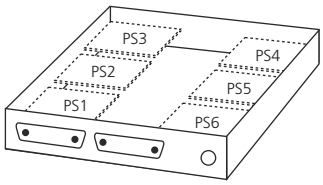	PS-FBD 2/1 (DS1661)	–	–	–	–	–	–
	PS-HSD 6/1 (DS1663)	–	–	–	–	–	–
	PS-LSD 6/1 (DS1662)	–	–	–	–	–	–
	PS-DINJ 2/1 (DS1664)	–	–	–	–	–	–
	PS-HCFBD 1/1 [1), 2)] (DS1667)	✓			✓		
	PS-HCHBD 2/1 [1), 2)] (DS1668)	✓			✓		
	PS-HCFBD 1/2 [1)] (DS1767)	✓			✓		
	PS-HCHBD 2/2 [1)] (DS1768)	✓			✓		

1) The PS-HCxBD x/x module requires three adjacent slots. You can mount a module in rail 1 (slots PS1 … PS3) or in rail 2 (slots PS4 … PS6).

2) The PS-HCxBD x/1 module uses only the available I/O signals of slot PS2 (if mounted in rail 1) or of slot PS5 (if mounted in rail 2). The I/O signals of slots PS1 and PS3 (or PS4 and PS5) are not connected to the module.

Installation of PS Modules in a Power Unit that is part of a Stack with UCB

Where to go from here

Information in this section

Stack with Control Unit (MPC565) and Power Unit – RoutingID 35429 94

Stack with UCB Consisting of Control Unit (MPC565), SC Unit, and Power Unit – RoutingID 28555 for SC-TC 8/1 Module 95

Stack with Control Unit (MPC565), Power Unit, and SC Unit – RoutingID 11550 97

Stack with Control Unit (MPC565), SC Unit, and Power Unit – RoutingID 50551 for SC-TC 8/1 Module 99

Stack with Control Unit (MPC565), Power Unit, and SC Unit – RoutingID 29752 for Engine Control 100

Stack with Control Unit (MPC565), Power Unit, and SC Unit – RoutingID 61376 for PS-DINJ 2/1 Module..... 102

Stack with Control Unit (MPC565), two Power Units, and SC Unit – RoutingID 65422 for PS-DINJ 2/1 Module..... 103

Stack with Control Unit (MPC565), Two SC Units, and Power Unit – RoutingID 53202 for SC-TC 8/1 Module..... 105

Stack with Control Unit (MPC565), Two SC Units, and Power Unit – RoutingID 10243 for SC-TC 8/1 Module and PS-DINJ 2/1 Module..... 107

Stack with Control Unit (MPC565) and Power Unit – RoutingID 35429

Objective

Which PS module can be installed on which slot of a Power Unit that builds a stack with UCB containing a Control Unit (MPC565) is defined via routing code.

RoutingID 35429 – Power Unit

The routing code with the RoutingID 35429 is valid only if the stack consists of a Control Unit with MC-MPC565 1/1 module (layer 1) and a Power Unit (layer 2).

The following table shows which PS modules can be installed on which slot of the Power Unit and suit the specifics of the Control Unit's microcontroller channels you need in your application.

Stack with UCB (RoutingID 35429)	Slot	Signal	MPC565 Channel	Possible Module
Power Unit (layer 2) 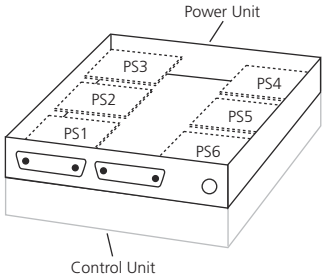 	PS1	2 x analog	1 … 2	▪ PS-FBD 2/1 (DS1661) ▪ PS-HSD 6/1 (DS1663) ▪ PS-LSD 6/1 (DS1662) ▪ PS-HCFBD 1/1 [1), 2)] (DS1667) ▪ PS-HCHBD 2/1 [1), 2)] (DS1668) ▪ PS-HCFBD 1/2 [1)] (DS1767) ▪ PS-HCHBD 2/2 [1), 3)] (DS1768)
		4 x TPU	TPU_B: 9 … 12	
		2 x bit out	25 … 26	
	PS2	2 x analog	3 … 4	
		4 x TPU	TPU_B: 13 … 16	
		2 x bit out	27 … 28	
	PS3	2 x analog	5 … 6	
		4 x TPU	TPU_C: 1 … 4	
		2 x bit out	29 … 30	
	PS4	2 x analog	7 … 8	
		4 x TPU	TPU_C: 5 … 8	
		2 x bit out	31 … 32	
	PS5	2 x analog	9 … 10	
		4 x TPU	TPU_C: 9 … 12	
		2 x bit out	33 … 34	
	PS6	2 x analog	11 … 12	
		4 x TPU	TPU_C: 13 … 16	
		2 x bit out	35 … 36	

1) The PS-HCxBD x/x module requires three adjacent slots. You can mount a module in rail 1 (slots PS1 … PS3) or in rail 2 (slots PS4 … PS6).

2) The PS-HCxBD x/1 module uses only the available I/O signals of slot PS2 (if mounted in rail 1) or of slot PS5 (if mounted in rail 2). The I/O signals of slots PS1 and PS3 (or PS4 and PS5) are not connected to the module.

3) This routing code is only valid for PS-HCHBD 2/2 modules in *General purpose, single channel* or *General purpose, double channel* mode.

Stack with UCB Consisting of Control Unit (MPC565), SC Unit, and Power Unit – RoutingID 28555 for SC-TC 8/1 Module

Objective

The routing code with RoutingID 28555 applies to the following configuration:

Stack with UCB consisting of:

- Control Unit with MC-MPC565 1/1 module (layer 1)
- SC Unit (layer 2) with one or more SC-TC 8/1 modules
- Power Unit (layer 3)

Note

The routing of the Control Unit and the Power Unit in this stack is identical to the routing of the double stack consisting of Control and Power Unit with RoutingID 35429. Thus, an existing double stack can be easily extended with an SC Unit with SC-TC 8/1 module(s) without changing the assembly of the other modules in the stack.

Note

If you rearrange the modules on the carrier boards contrary to the table below, the routing code stored in the units has to be modified by dSPACE.

RoutingID 28555 – Power Unit

The following table shows which PS modules can be installed on which slot of the Power Unit, and which suit the specifics of the Control Unit's microcontroller channels you need in your application.

Stack with UCB (RoutingID 28555)	Slot	Signal	MPC565 Channel	Possible Module
Power Unit (layer 3) 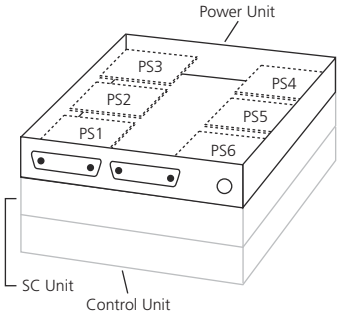	PS1	2 x analog	1 … 2	▪ PS-FBD 2/1 (DS1661) ▪ PS-HSD 6/1 (DS1663) ▪ PS-LSD 6/1 (DS1662) ▪ PS-HCFBD 1/1 [1), 2)] (DS1667) ▪ PS-HCHBD 2/1 [1), 2)] (DS1668) ▪ PS-HCFBD 1/2 [1)] (DS1767) ▪ PS-HCHBD 2/2 [1), 3)] (DS1768)
		4 x TPU	TPU_B: 9 … 12	
		2 x bit out	25 … 26	
	PS2	2 x analog	3 … 4	
		4 x TPU	TPU_B: 13 … 16	
		2 x bit out	27 … 28	
	PS3	2 x analog	5 … 6	
		4 x TPU	TPU_C: 1 … 4	
		2 x bit out	29 … 30	
	PS4	2 x analog	7 … 8	
		4 x TPU	TPU_C: 5 … 8	
		2 x bit out	31 … 32	
	PS5	2 x analog	9 … 10	
		4 x TPU	TPU_C: 9 … 12	
		2 x bit out	33 … 34	
	PS6	2 x analog	11 … 12	
		4 x TPU	TPU_C: 13 … 16	
		2 x bit out	35 … 36	

1) The PS-HCxBD x/x module requires three adjacent slots. You can mount a module in rail 1 (slots PS1 … PS3) or in rail 2 (slots PS4 … PS6).

2) The PS-HCxBD 1/x module uses only the available I/O signals of slot PS2 (if mounted in rail 1) or of slot PS5 (if mounted in rail 2). The I/O signals of slots PS1 and PS3 (or PS4 and PS5) are not connected to the module.

3) This routing code is only valid for PS-HCHBD 2/2 modules in *General purpose, single channel* or *General purpose, double channel* mode.

Stack with Control Unit (MPC565), Power Unit, and SC Unit – RoutingID 11550

Objective

Which PS module can be installed on which slot of a Power Unit that builds a stack with UCB containing a Control Unit (MPC565) and an SC Unit is defined via routing code.

RoutingID 11550 – Power Unit

The routing code with the RoutingID 11550 is valid only if the stack consists of a Control Unit with MC-MPC565 1/1 module (layer 1), SC Unit (layer 2), and a Power Unit (layer 3).

The following table shows which PS modules can be installed on which slot of the Power Unit and suit the specifics of the Control Unit's microcontroller channels you need in your application.

Stack with UCB (RoutingID 11550)	Slot	Signal	MPC565 Channel	Possible Module
Power Unit (layer 3) 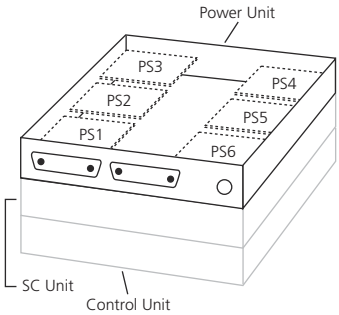 	PS1	2 x analog	1 … 2	▪ PS-FBD 2/1 (DS1661) ▪ PS-HSD 6/1 (DS1663) ▪ PS-LSD 6/1 (DS1662) ▪ PS-HCFBD 1/1 [1), 2)] (DS1667) ▪ PS-HCHBD 2/1 [1), 2)] (DS1668) ▪ PS-HCFBD 1/2 [1)] (DS1767) ▪ PS-HCHBD 2/2 [1), 3)] (DS1768)
		4 x TPU	TPU_B: 9 … 12	
		2 x bit out	25 … 26	
	PS2	2 x analog	3 … 4	
		4 x TPU	TPU_B: 13 … 16	
		2 x bit out	27 … 28	
	PS3	2 x analog	5 … 6	
		4 x TPU	TPU_C: 1 … 4	
		2 x bit out	29 … 30	
	PS4	2 x analog	7 … 8	
		4 x TPU	TPU_C: 5 … 8	
		2 x bit out	31 … 32	
	PS5	2 x analog	9 … 10	
		4 x TPU	TPU_C: 9 … 12	
		2 x bit out	33 … 34	
	PS6	2 x analog	11 … 12	
		4 x TPU	TPU_C: 13 … 16	
		2 x bit out	35 … 36	

1) The PS-HCxBD x/x module requires three adjacent slots. You can mount a module in rail 1 (slots PS1 … PS3) or in rail 2 (slots PS4 … PS6).

2) The PS-HCxBD 1/x module uses only the available I/O signals of slot PS2 (if mounted in rail 1) or of slot PS5 (if mounted in rail 2). The I/O signals of slots PS1 and PS3 (or PS4 and PS5) are not connected to the module.

3) This routing code is only valid for PS-HCHBD 2/2 modules in *General purpose, single channel* or *General purpose, double channel* mode.

Stack with Control Unit (MPC565), SC Unit, and Power Unit – RoutingID 50551 for SC-TC 8/1 Module

Objective

The routing code with RoutingID 50551 applies to the following configuration:

Stack with UCB consisting of:

- Control Unit with MC-MPC565 1/1 module (layer 1)
- SC Unit (layer 2) with one or more SC-TC 8/1 modules
- Power Unit (layer 3)

Note

The routing of the Control Unit and the Power Unit in this stack is identical to the routing of the triple stack consisting of Control Unit, SC Unit, and Power Unit with RoutingID 11550. Thus, the SC Unit of an existing triple stack can be easily replaced by an SC Unit with SC-TC 8/1 module(s) without changing the assembly of the other modules in the stack.

Note

If you rearrange the modules on the carrier boards contrary to the table below, the routing code stored in the units has to be modified by dSPACE.

RoutingID 50551 – Power Unit

The following table shows which PS modules can be installed on which slot of the Power Unit, and which suit the specifics of the Control Unit's microcontroller channels you need in your application.

Stack with UCB (RoutingID 50551)	Slot	Signal	MPC565 Channel	Possible Module
Power Unit (layer 3) 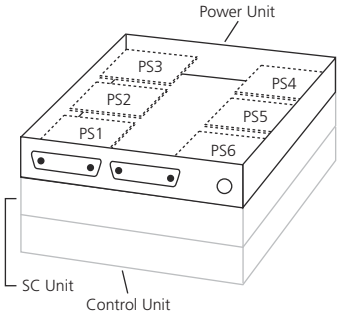	PS1	2 x analog	1 … 2	▪ PS-FBD 2/1 (DS1661) ▪ PS-HSD 6/1 (DS1663) ▪ PS-LSD 6/1 (DS1662) ▪ PS-HCFBD 1/1 [1), 2)] (DS1667) ▪ PS-HCHBD 2/1 [1), 2)] (DS1668) ▪ PS-HCFBD 1/2 [1)] (DS1767) ▪ PS-HCHBD 2/2 [1), 3)] (DS1768)
		4 x TPU	TPU_B: 9 … 12	
		2 x bit out	25 … 26	
	PS2	2 x analog	3 … 4	
		4 x TPU	TPU_B: 13 … 16	
		2 x bit out	27 … 28	
	PS3	2 x analog	5 … 6	
		4 x TPU	TPU_C: 1 … 4	
		2 x bit out	29 … 30	
	PS4	2 x analog	7 … 8	
		4 x TPU	TPU_C: 5 … 8	
		2 x bit out	31 … 32	
	PS5	2 x analog	9 … 10	
		4 x TPU	TPU_C: 9 … 12	
		2 x bit out	33 … 34	
	PS6	2 x analog	11 … 12	
		4 x TPU	TPU_C: 13 … 16	
		2 x bit out	35 … 36	

1) The PS-HCxBD x/x module requires three adjacent slots. You can mount a module in rail 1 (slots PS1 … PS3) or in rail 2 (slots PS4 … PS6).

2) The PS-HCxBD 1/x module uses only the available I/O signals of slot PS2 (if mounted in rail 1) or of slot PS5 (if mounted in rail 2). The I/O signals of slots PS1 and PS3 (or PS4 and PS5) are not connected to the module.

3) This routing code is only valid for PS-HCHBD 2/2 modules in *General purpose, single channel* or *General purpose, double channel* mode.

Stack with Control Unit (MPC565), Power Unit, and SC Unit – RoutingID 29752 for Engine Control

Objective

Which PS module can be installed on which slot of a Power Unit that builds a stack with UCB containing a Control Unit (MPC565) and an SC Unit is defined via routing code optimized for engine control.

RoutingID 29752 – Power Unit – engine control

The routing code with the RoutingID 29752 is valid only if the stack consists of a Control Unit with MC-MPC565 1/1 module (layer 1), SC Unit (layer 2), and a Power Unit (layer 3). The following table shows which PS modules can be installed on which slot of the Power Unit and suit the specifics of the Control Unit's microcontroller channels you need in your application.

Stack with UCB (RoutingID 29752) – Engine Control	Slot	Signal	MPC565 Channel	Possible Module
Power Unit (layer 3) 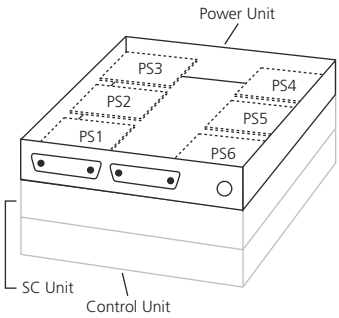 	PS1	2 x TPU, used as injection signals	TPU_A: 6, 8	▪ PS-FBD 2/1 (DS1661) ▪ PS-HSD 6/1 (DS1663) ▪ PS-LSD 6/1 (DS1662)
		2 x TPU	TPU_B: 12, 13	
		2 x MIOS (PWM)	4, 5	
		2 x analog	29, 30	
	PS2	2 x TPU, used as injection signals	TPU_A: 10, 12	
		2 x TPU	TPU_B: 14, 15	
		2 x bit I/O	5, 6	
		2 x analog	31, 32	
	PS3	2 x TPU, used as injection signals	▪ TPU_A: 14 ▪ TPU_B: 2	
		2 x TPU	TPU_C: 6, 7	
		1 x MIOS (PWM)	8	
		1 x bit I/O	30	
		2 x analog	33, 34	
	PS4	1 x TPU, used as throttle signal	TPU_B: 16	▪ PS-FBD 2/1 (DS1661)
		1 x MIOS (PWM)	1	
		2 x bit I/O	7, 8	
		2 x analog	35, 36	
	PS5	2 x MIOS (PWM), used as lambda probe heater control signals	2, 3	▪ PS-LSD 6/1 (DS1662)
		4 x bit I/O	9 … 12	
		2 x analog	37, 38	
	PS6	4 x TPU	TPU_C: 13 … 16	▪ PS-FBD 2/1 (DS1661) ▪ PS-HSD 6/1 (DS1663) ▪ PS-LSD 6/1 (DS1662)
		2 x bit I/O	13, 14	
		2 x analog	39, 40	

Stack with Control Unit (MPC565), Power Unit, and SC Unit – RoutingID 61376 for PS-DINJ 2/1 Module

Objective

The routing code with the RoutingID 61376 applies the following configuration:

- Engine control use scenario for engines with up to 4 cylinders
- Stack with UCB consisting of:
  - Control Unit with MC-MPC565 1/1 module (layer 1)
  - SC Unit (layer 2)
  - Power Unit (layer 3)
- One or more PS-DINJ 2/1 module

Safety precautions

⚠ WARNING

Hazardous voltages! The PS-DINJ 2/1 module generates output voltages up to 100 V.
Risk of electric shock

- Observe all safety precautions stated before using the PS-DINJ 2/1 module. Refer to Safety Precautions for Using the PS-DINJ 2/1 Module on page 27.

RoutingID 61376 – Power Unit with PS-DINJ 2/1 – engine control

The following table shows which PS modules can be installed on which slot of the Power Unit and suit the specifics of the Control Unit's microcontroller channels you need in your application.

Stack with UCB (RoutingID 61376) – Engine Control	Slot	Signal	MPC565 Channel	Possible Module
Power Unit (layer 3) 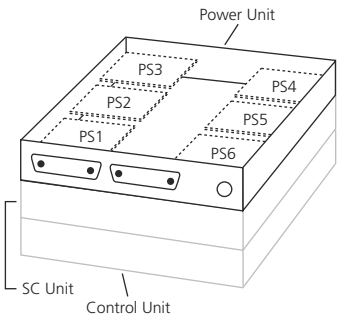	PS1	4 x TPU, used as injection signals	TPU_A: 6 … 9	▪ PS-DINJ 2/1 (DS1664) [1]
		2 x analog	29, 30	
	PS2	–	–	
	PS3	2 x MIOS (PWM), used as lambda probe heater control signals	2, 3	▪ PS-LSD 6/1 (DS1662)
		4 x bit I/O	9 … 12	
		2 x analog	33, 34	
	PS4	4 x TPU	TPU_A: 10 … 13	▪ PS-DINJ 2/1 (DS1664) [1]
		2 x analog	35, 36	
	PS5	–	–	
	PS6	1 x TPU, used as throttle signal	TPU_B: 16	▪ PS-FBD 2/1 (DS1661)
		1 x MIOS (PWM)	1	
		2 x bit I/O	7, 8	
		2 x analog	39, 40	

[1] The PS-DINJ 2/1 has 2 channels and requires two adjacent slots. The first slot has to process both channels. You can mount it on the Power Unit's slots PS1 … PS2, and PS4 … PS5.

Stack with Control Unit (MPC565), two Power Units, and SC Unit – RoutingID 65422 for PS-DINJ 2/1 Module

Objective

The routing code with the RoutingID 65422 applies the following configuration:

- Engine control use scenario for engines with up to 8 cylinders
- Stack with UCB consisting of:
  - Control Unit with MC-MPC565 1/1 module (layer 1)
  - SC Unit (layer 2)
  - Power Unit 1 (layer 3)
  - Power Unit 2 (layer 4)
- One or more PS-DINJ 2/1 module

Safety precautions

⚠ WARNING

Hazardous voltages! The PS-DINJ 2/1 module generates output voltages up to 100 V.
Risk of electric shock

- Observe all safety precautions stated before using the PS-DINJ 2/1 module. Refer to Safety Precautions for Using the PS-DINJ 2/1 Module on page 27.

RoutingID 65422 – Power Units with PS-DINJ 2/1 – engine control

The following table shows which PS modules can be installed on which slot of a Power Unit and suit the specifics of the Control Unit's microcontroller channels you need in your application.

Stack with UCB (RoutingID 65422) – Engine Control	Slot	Signal	MPC565 Channel	Possible Module
Power Unit 1 (layer 3) 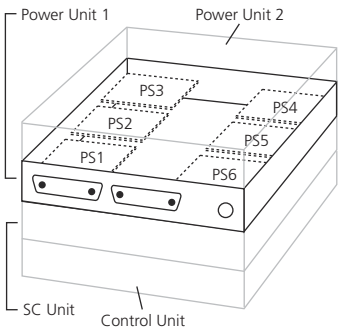	PS1	4 x TPU, used as injection signals	TPU_A: 6 … 8	▪ PS-DINJ 2/1 (DS1664) [1)]
		2 x analog	29, 30	
	PS2	–	–	
	PS3	2 x MIOS (PWM), used as lambda probe heater control signals	2, 3	▪ PS-LSD 6/1 (DS1662)
		4 x bit I/O	9 … 12	
		2 x analog	33, 34	
	PS4	4 x TPU, used as injection signals	TPU_A: 10 … 13	▪ PS-DINJ 2/1 (DS1664) [1)]
		2 x analog	35, 36	
	PS5	–	–	
	PS6	1 x TPU, used as throttle signal	TPU_B: 16	▪ PS-FBD 2/1 (DS1661)
		1 x MIOS (PWM)	1	
		2 x bit I/O	7, 8	
		2 x analog	39, 40	

Stack with UCB (RoutingID 65422) – Engine Control	Slot	Signal	MPC565 Channel	Possible Module
Power Unit 2 (layer 4) 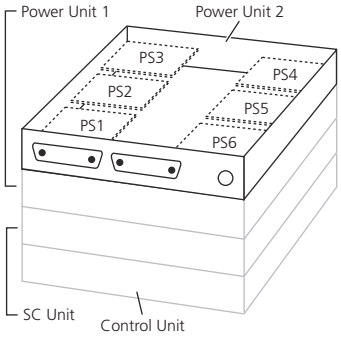 	PS1	2 x TPU	TPU_A: 14, 15	▪ PS-FBD 2/1 (DS1661) [2] ▪ PS-HSD 6/1 (DS1663) [2] ▪ PS-LSD 6/1 (DS1662) [2]
		2 x MIOS (PWM)	4, 5	
		2 x bit I/O	5, 6	
	PS2	4 x TPU, used as injection signals	TPU_C: 12 … 15	▪ PS-DINJ 2/1 (DS1664) [3]
		2 x analog	31, 32	
	PS3	–	–	
	PS4	4 x TPU	TPU_B: 12 … 15	▪ PS-FBD 2/1 (DS1661) [2] ▪ PS-HSD 6/1 (DS1663) [2] ▪ PS-LSD 6/1 (DS1662) [2]
		1 x MIOS (PWM)	8	
		1 x bit I/O	13	
	PS5	4 x TPU	TPU_B: 2, 3 TPU_C: 6, 7	▪ PS-DINJ 2/1 (DS1664) [3]
		2 x analog	37, 38	
	PS6	–	–	

[1] Power Unit (layer 3): The PS-DINJ 2/1 has 2 channels and requires two adjacent slots. The first slot has to process both channels. You can mount it on the Power Unit's slots PS1 … PS2, and PS4 … PS5.
[2] If the module is installed in this slot, the current measurement feature is not supported.
[3] Power Unit (layer 4): The PS-DINJ 2/1 has 2 channels and requires two adjacent slots. The first slot has to process both channels. You can mount it on the Power Unit's slots PS2 … PS3, and PS5 … PS6.

Stack with Control Unit (MPC565), Two SC Units, and Power Unit – RoutingID 53202 for SC-TC 8/1 Module

Objective

The routing code with RoutingID 53202 applies to the following configuration:

Stack with UCB consisting of:

- Control Unit with MC-MPC565 1/1 module (layer 1)
- SC Unit 1 (layer 2)
- SC Unit 2 (layer 3) with one or more SC-TC 8/1 modules
- Power Unit (layer 4)

Note

The routing of the Control Unit and the Power Unit in this stack is identical to the routing of the triple stack consisting of Control Unit, SC Unit, and Power Unit with RoutingID 11550. Thus, an existing triple stack can be easily extended with an SC Unit with SC-TC 8/1 module(s) without changing the assembly of the other modules in the stack.

Note

If you rearrange the modules on the carrier boards contrary to the table below, the routing code stored in the units has to be modified by dSPACE.

RoutingID 53202 – Power Unit

The following table shows which PS modules can be installed on which slot of the Power Unit, and which suit the specifics of the Control Unit's microcontroller channels you need in your application.

Stack with UCB (RoutingID 53202)	Slot	Signal	MPC565 Channel	Possible Module
Power Unit (layer 4) 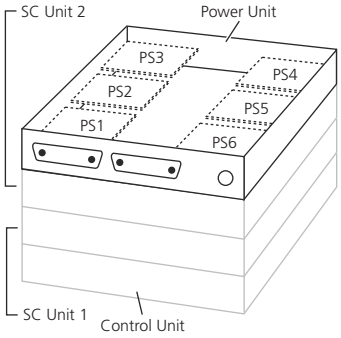	PS1	2 x analog	1 … 2	▪ PS-FBD 2/1 (DS1661) ▪ PS-HSD 6/1 (DS1663) ▪ PS-LSD 6/1 (DS1662) ▪ PS-HCFBD 1/1 [1), 2)] (DS1667) ▪ PS-HCHBD 2/1 [1), 2)] (DS1668) ▪ PS-HCFBD 1/2 [1)] (DS1767) ▪ PS-HCHBD 2/2 [1), 3)] (DS1768)
		4 x TPU	TPU_B: 9 … 12	
		2 x bit out	25 … 26	
	PS2	2 x analog	3 … 4	
		4 x TPU	TPU_B: 13 … 16	
		2 x bit out	27 … 28	
	PS3	2 x analog	5 … 6	
		4 x TPU	TPU_C: 1 … 4	
		2 x bit out	29 … 30	
	PS4	2 x analog	7 … 8	
		4 x TPU	TPU_C: 5 … 8	
		2 x bit out	31 … 32	
	PS5	2 x analog	9 … 10	
		4 x TPU	TPU_C: 9 … 12	
		2 x bit out	33 … 34	
	PS6	2 x analog	11 … 12	
		4 x TPU	TPU_C: 13 … 16	
		2 x bit out	35 … 36	

[1)] The PS-HCxBD x/x module requires three adjacent slots. You can mount a module in rail 1 (slots PS1 … PS3) or in rail 2 (slots PS4 … PS6).

[2)] The PS-HCxBD 1/x module uses only the available I/O signals of slot PS2 (if mounted in rail 1) or of slot PS5 (if mounted in rail 2). The I/O signals of slots PS1 and PS3 (or PS4 and PS5) are not connected to the module.

[3)] This routing code is only valid for PS-HCHBD 2/2 modules in *General purpose, single channel* or *General purpose, double channel* mode.

Stack with Control Unit (MPC565), Two SC Units, and Power Unit – RoutingID 10243 for SC-TC 8/1 Module and PS-DINJ 2/1 Module

Objective

The routing code with the RoutingID 10243 applies the following configuration:

- Engine control use scenario for engines with up to 4 cylinders
- Stack with UCB consisting of:
  - Control Unit with MC-MPC565 1/1 module (layer 1)
  - SC Unit 1 (layer 2)

- SC Unit 2 (layer 3) with one or more SC-TC 8/1 module
- Power Unit (layer 4) with one or more PS-DINJ 2/1 module

Note

If you rearrange the modules on the carrier boards contrary to the table below, the routing code stored in the units has to be modified by dSPACE.

Safety precautions

⚠ WARNING

Hazardous voltages! The PS-DINJ 2/1 module generates output voltages up to 100 V.
Risk of electric shock

- Observe all safety precautions stated before using the PS-DINJ 2/1 module. Refer to Safety Precautions for Using the PS-DINJ 2/1 Module on page 27.

RoutingID 10243 – Power Unit with PS-DINJ 2/1 – engine control

The following table shows which PS modules can be installed on which slot of a Power Unit and suit the specifics of the Control Unit's microcontroller channels you need in your application.

Stack with UCB (RoutingID 10243) – Engine Control	Slot	Signal	MPC565 Channel	Possible Module
Power Unit (layer 4) 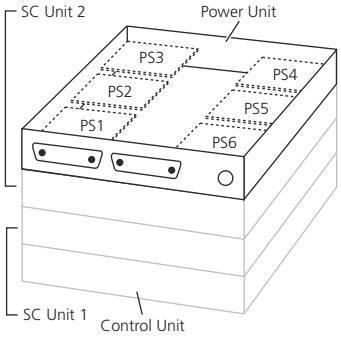	PS1	4 x TPU, used as injection signals	TPU_A: 6 … 9	▪ PS-DINJ 2/1 [1] (DS1664)
		2 x analog	29, 30	
	PS2	–	–	
	PS3	2 x MIOS (PWM), used as lambda probe heater control signals	2, 3	▪ PS-LSD 6/1 (DS1662)
		4 x bit I/O	9 … 12	
		2 x analog	33, 34	
	PS4	4 x TPU, used as injection signals	TPU_A: 10 … 13	▪ PS-DINJ 2/1 [1] (DS1664)
		2 x analog	35, 36	
	PS5	–	–	
	PS6	1 x TPU, used as throttle signal	TPU_B: 16	▪ PS-FBD 2/1 (DS1661)
		1 x MIOS (PWM)	1	
		2 x bit I/O	7, 8	
		2 x analog	39, 40	

[1] The PS-DINJ 2/1 has 2 channels and requires two adjacent slots. The first slot has to process both channels. You can mount it on the Power Unit's slots PS1 … PS2, and PS4 … PS5.

Connectors and Pinouts

Objective

The RapidPro Power Unit has connectors on the front and, if used as a single unit, on the rear panel.

Where to go from here

Information in this section

Front Panel Connectors..... 110

Rear Panel Connectors..... 115

Front Panel Connectors

Purpose

The front panel provides I/O connectors and a communication connector.

Connector labels

The labels of the I/O connectors on a front panel always begin with an 'F'. The host PC connector is labeled 'Host PC'. The labels are printed near the connectors at the front of the panel.

Where to go from here

Information in this section

Pinout information and signal specifications of the front panel connectors will help you to build the cable harness.

F1 Connector..... 110

F2 Connector..... 113

Host PC Connector..... 115

F1 Connector

Purpose

The F1 connector provides access to the I/O signals of the power stage modules inserted in slots 1 … 3, to connect them to external devices. In addition it has the inputs for the external power supply of the PS modules 1 … 3.

Pinout

The F1 connector of the Power Unit is male Sub-D connector with 25 signal and two high-current pins. The pin numbering used for Sub-D connectors is not standardized. The following illustration shows the numbering used (front view).

Note

Do not rely on the numbers written on Sub-D connectors.

F1 Connector	Pin	Signal	Pin	Signal
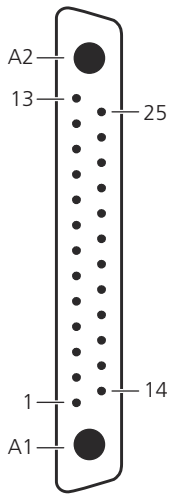	A2	UBAT1		
	13	S2_IO1 [1]		
	12	S2_IO3	25	S2_IO2
	11	S2_IO5	24	S2_IO4
	10	S2_IO7	23	S2_IO6
	9	S1_IO1	22	S2_IO8
	8	S1_IO3	21	S1_IO2
	7	S1_IO5	20	S1_IO4
	6	S1_IO7	19	S1_IO6
	5	S3_IO1	18	S1_IO8
	4	S3_IO3	17	S3_IO2
	3	S3_IO5	16	S3_IO4
	2	S3_IO7	15	S3_IO6
	1	KL15	14	S3_IO8
	A1	GND1		

[1] The mapping between a single I/O signal of a module and a pin on the front I/O connector depends on the types of the installed modules and the carrier board slots that they are inserted in. You can get the necessary pinout information by exporting it to a file via ConfigurationDesk for RapidPro. You can read this file via Microsoft™ Excel.

Signal specification

Signal	Description	Specification [1]	
Sx_IOx [2]	Output signals	Output voltage range	Depends on PS module
		Output current	Depends on PS module and connected load
KL15	Remote control input for switching on the Power Unit with a remote switch,	Power-on voltage Power-off voltage	> 4 V < 3 V

Signal	Description	Specification [1]	
	KL15 for example (output of ignition/driving switch) Note: In a stack with UCB the KL15 pin of the Power Unit is enabled. The stack is switched via the Control Unit.	Overvoltage protection	Up to ±100 V
UBAT1 [3]	External power supply input (for example, from car battery) for module slots 1 … 3 and all internal supply voltages	Input voltage range	+6 V … 54 V DC [4]
		Standby current (KL15 off) [5]	< 10 mA (typ. 8 mA)
		Power consumption [5]	Without modules: ▪ Approx. 4 W With modules: ▪ Approx. 10 W (depends on the PS modules used)
		Overvoltage protection	Up to ±100 V
GND1 [3]	Power supply ground line for module slots 1 … 3 and all internal supply voltages	–	

[1] Unless stated otherwise, the specifications are valid only if the dSPACE hardware is correctly powered, switched on, and ready for operation.
[2] Sx refers to the slot number on the carrier board and is in the range S1 … S3, IOx refers to the I/O pin of the slot and is in the range IO1 … IO8.
[3] UBAT1 and GND1 must be connected to a power supply to ensure a proper operation of the Power Unit used as single unit, even if slot 1 … 3 are not equipped with modules.
[4] With an additional absolute maximum tolerance of +6 V.
[5] Values are valid for the entire Power Unit.

⚠ WARNING

Hazardous voltages
Risk of electric shock and/or damage to the hardware
- Do not connect any high-voltage devices to the I/O connectors of the hardware.
- Do not apply any voltages/currents outside the specified ranges to the connector pins.

Matching connectors

Matching connectors come with the hardware package. If you require additional connectors, you can order them from dSPACE. For details, refer to Hardware Accessories (RapidPro System Hardware Installation Guide 🕮).

F2 Connector

Purpose

The F2 connector provides access to the I/O signals of the power stage modules inserted in slots 4 … 6, to connect them to external devices. In addition it has the inputs for the external power supply of the PS modules 4 … 6.

Pinout

The F2 connector of the Power Unit is male Sub-D connector with 25 signal and two high-current pins. The pin numbering used for Sub-D connectors is not standardized. The following illustration shows the numbering used (front view).

Note

Do not rely on the numbers written on Sub-D connectors.

F2 Connector	Pin	Signal	Pin	Signal
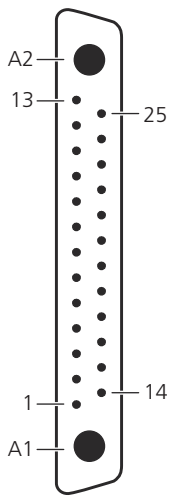	A2	UBAT2		
	13	S6_IO1 [1]		
	12	S6_IO3	25	S6_IO2
	11	S6_IO5	24	S6_IO4
	10	S6_IO7	23	S6_IO6
	9	S5_IO1	22	S6_IO8
	8	S5_IO3	21	S5_IO2
	7	S5_IO5	20	S5_IO4
	6	S5_IO7	19	S5_IO6
	5	S4_IO1	18	S5_IO8
	4	S4_IO3	17	S4_IO2
	3	S4_IO5	16	S4_IO4
	2	S4_IO7	15	S4_IO6
	1	Reserved	14	S4_IO8
	A1	GND2		

[1] The mapping between a single I/O signal of a module and a pin on the front I/O connector depends on the types of the installed modules and the carrier board slots that they are inserted in. You can get the necessary pinout information by exporting it to a file via ConfigurationDesk for RapidPro. You can read this file via Microsoft™ Excel.

Signal specification

Signal	Description	Specification [1]	
Sx_IOx [2]	Output signals	Output voltage range	Depends on PS module
		Output current	Depends on PS module and connected load
UBAT2	External power supply input (for example, from car battery) for module slots 4 … 6	Input voltage range	+6 V … 54 V DC [3]
		Standby current (KL15 off) [4]	< 10 mA (typ. 8 mA)
		Power consumption [4]	Without modules: ▪ Approx. 4 W With modules: ▪ Approx. 10 W (depends on the PS modules used)
		Overvoltage protection	Up to ±100 V
GND2	Power supply ground line for module slots 4 … 6	–	

[1] Unless stated otherwise, the specifications are valid only if the dSPACE hardware is correctly powered, switched on, and ready for operation.
[2] Sx refers to the slot number on the carrier board and is in the range S4 … S6, IOx refers to the I/O pin of the slot and is in the range IO1 … IO8.
[3] With an additional absolute maximum tolerance of +6 V.
[4] Values are valid for the entire Power Unit.

⚠ WARNING

Hazardous voltages
Risk of electric shock and/or damage to the hardware

- Do not connect any high-voltage devices to the I/O connectors of the hardware.
- Do not apply any voltages/currents outside the specified ranges to the connector pins.

Matching connectors

Matching connectors come with the hardware package. If you require additional connectors, you can order them from dSPACE. For details, refer to Hardware Accessories (RapidPro System Hardware Installation Guide 🕮).

Host PC Connector

Purpose

The host PC connector provides access to the USB interface of the Power Unit, which is used for module configuration from your host PC.

> **Note**
>
> The host PC connector must not be connected, if the Power Unit is assembled in a stack with UCB.

Pinout and signal description

The host PC connector is a 4-pin, female circular connector. It is color-coded (yellow) and has keyways to avoid false connecting. The following illustration shows the numbering used (front view).

Host PC Connector	Pin	Signal	Description
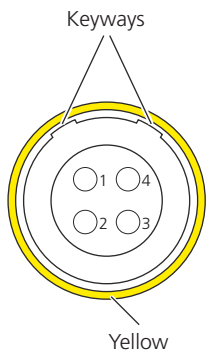	1	VBUS	USB power
	2	D+	USB data – noninverted signal of differential data pair
	3	D–	USB data – inverted signal of differential data pair
	4	GND	USB ground

Matching cable

You can order a matching PC connection cable from dSPACE. For details, refer to Hardware Accessories (RapidPro System Hardware Installation Guide 🕮).

Rear Panel Connectors

Purpose

The rear panel with I/O connectors is only needed and mounted if you use the RapidPro Power Unit as a single unit. The I/O connectors are used to obtain access to the signals from/to, for example, a dSPACE RCP system (MicroAutoBox or dSPACE modular system).

Connector labels

The labels of the I/O connectors on a rear panel always begin with an 'R'. They are printed near the connector at the front of the panel.

Where to go from here

Information in this section

Pinout information and signal specifications of the rear panel connectors will help you to build the cable harness.

R1 Connector 116

R2 Connector 118

R1 Connector

Purpose

The R1 connector is used to obtain access to the *digital signals* from/to, for example, a dSPACE RCP system (MicroAutoBox or dSPACE Modular System).

Pinout

The R1 connector is a 50-pin, female Sub-D connector. The pin numbering used for Sub-D connectors is not standardized. The following illustration shows the numbering used (front view).

Note

Do not rely on the numbers written on Sub-D connectors.

R1 Connector	Pin	Signal	Pin	Signal	Pin	Signal
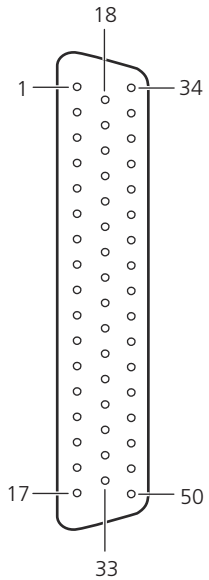	1	DIG_1			34	DIG_34
	2	DIG_2	18	DIG_18	35	DIG_35
	3	DIG_3	19	DIG_19	36	DIG_36
	4	DIG_4	20	DIG_20	37	DIG_37
	5	DIG_5	21	DIG_21	38	DIG_38
	6	DIG_6	22	DIG_22	39	DIG_39
	7	DIG_7	23	DIG_23	40	DIG_40
	8	DIG_8	24	DIG_24	41	DIG_GND
	9	DIG_9	25	DIG_25	42	DIG_GND
	10	DIG_10	26	DIG_26	43	DIG_GND
	11	DIG_11	27	DIG_27	44	DIG_GND
	12	DIG_12	28	DIG_28	45	DIG_GND
	13	DIG_13	29	DIG_29	46	DIG_GND
	14	DIG_14	30	DIG_30	47	SPI_MOSI
	15	DIG_15	31	DIG_31	48	SPI_MISO
	16	DIG_16	32	DIG_32	49	SPI_CK
	17	DIG_17	33	DIG_33	50	SPI_CS

Signal specification

Signal	Description	Specification [1]	
DIG_x [2]	Digital input/output signals	Input voltage range	0 V … +5 V [3]
		Output voltage range	0 … +3.3 V
DIG_GND	Signal return line (ground) for digital signals	–	
SPI_MISO	Serial Peripheral Interface (SPI); data output (master in – slave out)		
SPI_MOSI	Serial Peripheral Interface (SPI); data input (master out – slave in)		
SPI_CK	Serial Peripheral Interface (SPI); clock input		
SPI_CS	Serial Peripheral Interface (SPI); chip select input		

[1] Unless stated otherwise, the specifications are valid only if the dSPACE hardware is correctly powered, switched on, and ready for operation.

[2] x refers to the I/O signal number and is in the range 1 … 40.

[3] A connected MicroAutoBox provides current sources to adapt its signal levels automatically. If you connect other external devices, you can increase the input voltage range to 0 … +15 V (see Adapting Digital Inputs (RapidPro System Hardware Installation Guide 🕮)).

⚠ WARNING

Hazardous voltages
Risk of electric shock and/or damage to the hardware

- Do not connect any high-voltage devices to the I/O connectors of the hardware.
- Do not apply any voltages/currents outside the specified ranges to the connector pins.

Matching connectors

Matching connectors come with the hardware package. If you require additional connectors, you can order them from dSPACE. For details, refer to Hardware Accessories (RapidPro System Hardware Installation Guide 🕮).

Related topics

Basics

Connecting Digital I/O to dSPACE Modular System (RapidPro System Hardware Installation Guide 🕮)

R2 Connector

Purpose

The R2 connector is used to obtain access to the *analog signals* from/to, for example, a dSPACE RCP system (MicroAutoBox or dSPACE Modular System).

Pinout

The R2 connector is a 50-pin, female Sub-D connector. The pin numbering used for Sub-D connectors is not standardized. The following illustration shows the numbering used (front view).

Note

Do not rely on the numbers written on Sub-D connectors.

R2 Connector	Pin	Signal	Pin	Signal	Pin	Signal
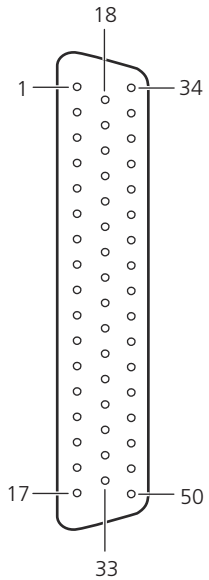	1	ANA_1			34	ANA_34
	2	ANA_2	18	ANA_18	35	ANA_35
	3	ANA_3	19	ANA_19	36	ANA_36
	4	ANA_4	20	ANA_20	37	ANA_37
	5	ANA_5	21	ANA_21	38	ANA_38
	6	ANA_6	22	ANA_22	39	ANA_39
	7	ANA_7	23	ANA_23	40	ANA_40
	8	ANA_8	24	ANA_24	41	ANA_GND
	9	ANA_9	25	ANA_25	42	ANA_GND
	10	ANA_10	26	ANA_26	43	ANA_GND
	11	ANA_11	27	ANA_27	44	ANA_GND
	12	ANA_12	28	ANA_28	45	ANA_GND
	13	ANA_13	29	ANA_29	46	ANA_GND
	14	ANA_14	30	ANA_30	47	ANA_GND
	15	ANA_15	31	ANA_31	48	WDT
	16	ANA_16	32	ANA_32	49	KL15
	17	ANA_17	33	ANA_33	50	ENABLE

Signal specification

Signal	Description	Specification [1]	
ANA_x [2]	Analog input/output signals	Input/output voltage range	–10 V … +10 V
ANA_GND	Signal return line (ground) for analog signals	–	
WDT	Watchdog timer input: If there is no signal, the output drivers of all the installed modules are in shutdown mode. This means all the outputs of the installed modules are switched off. Note: The watchdog function is software-configurable via ConfigurationDesk for RapidPro. By default, the watchdog function is set to off.	Input voltage range	0 V … +5 V [3]
		Signal type	Square-wave signal
		Signal frequency	10 Hz … 100 kHz
ENABLE	Enable/disable input: If this input is unconnected or at low level state, all the outputs of the installed modules are switched off. Note:	Input voltage range	0 V … +5 V DC [3] Thresholds: ▪ On: 2.5 V ▪ Off: 1.5 V

Signal	Description	Specification [1]	
	▪ The ENABLE signal switches the RapidPro unit from idle mode to execution mode. Only in idle mode you can download and configure the hardware. For details, refer to Characteristics of Application States and Operating Modes (ConfigurationDesk for RapidPro - Guide 🕮). ▪ For safety purposes it is recommended to control the ENABLE pin with the RCP system so that the RapidPro hardware cannot be configured unless the application on the RCP system is stopped.	Clamping circuit for protection against overvoltage spikes.	
KL15	Remote control input for switching on the unit with a remote switch, KL15 for example (output of ignition/driving switch).	Power-on voltage Power-off voltage	> 4 V < 3 V
		Overvoltage protection	Up to ±50 V

[1] Unless stated otherwise, the specifications are valid only if the dSPACE hardware is correctly powered, switched on, and ready for operation.
[2] x refers to the I/O signal number and is in the range 1 … 40.
[3] A connected MicroAutoBox provides current sources to adapt its signal levels automatically. If you connect other external devices, you can increase the input voltage range to 0 … +15 V (see Adapting Digital Inputs (RapidPro System Hardware Installation Guide 🕮)).

⚠ WARNING

Hazardous voltages!
Risk of electric shock and/or damage to the hardware.
- Do not connect any high-voltage devices to the I/O connectors of the hardware.
- Do not apply any voltages/currents outside the specified ranges to the connector pins.

Matching connectors

Matching connectors come with the hardware package. If you require additional connectors, you can order them from dSPACE. For details, refer to Hardware Accessories (RapidPro System Hardware Installation Guide 🕮).

Related topics

References

R1 Connector..... 116

Unit in Use

Objective

During operation, the Power Unit indicates its status by status LEDs and temperature sensors.

Where to go from here

Information in this section

Status LEDs..... 121
Temperature Sensors..... 124
Calculating the Maximum Permissible Rail Supply Voltage..... 125

Status LEDs

Purpose of the status LEDs

The RapidPro Power Unit is equipped with six status LEDs on the front panel:

- Four status LEDs indicate faults at the inputs/outputs.
- Two connection status LEDs indicate the status of the communication connection.

Location of the LEDs

The status LEDs 1 … 4 and the connection status LEDs are located on the front panel of each unit as shown in the illustration below.

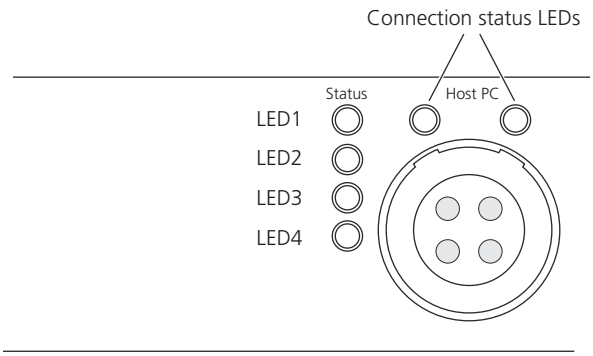

Connection status LEDs

The meanings of the connection status LEDs are as follows:

- Left LED above the connector:

  Lit *green* if the connection is established and the interface is ready for communication.

- Right LED above the connector:
  Flashes *green* if data is being sent or received.

Status LEDs 1 … 4

The display principles of the LEDs 1 … 4 are as follows:

- LED 1 shows the status of the external power supply.
- LED 2 … LED 4 show failures of the RapidPro system or application faults at the devices connected to the RapidPro system.
- LEDs lit *green* show correct behavior.
- LEDs lit *orange* or *red* show incorrect behavior.

The following table shows the faults indicated by the LEDs and the measures for solving the problems.

LED	Display	Description	Remedy
LED 1	Green	The power supply is working correctly.	–
	Orange	Single unit: The external supply voltage is connected but there is no enable signal on the KL15 pin.	Connect KL15 to the external supply voltage or to KL15_PU.
		Stack with UCB: ▪ The external supply voltage is connected but there is no enable signal on the Control Unit's KL15 pin. ▪ The Control Unit has disabled the power supplies of all other stack units.	▪ Connect Control Unit's KL15 to the external supply voltage or to KL15_PU. ▪ –
	Red	The external supply voltage is outside the permitted voltage range.	Apply an external supply voltage to the Control Unit of: +6 V … +54 V DC[1)]
	None	No power is supplied to the unit.	
LED 2	Green	No failure condition detected at the devices connected to the RapidPro hardware.	–
	Orange	A failure condition is detected, for example, overload, no load, overtemperature or short circuit.	▪ Disconnect and reconnect the link between the RapidPro

LED	Display	Description	Remedy
			unit and the connected devices. ▪ Check all signals. The signal levels must be in the specific range. ▪ Reset all diagnostics via ConfigurationDesk for RapidPro.
	Red	Internal memory write or erase failures. The carrier board is operating in shutdown mode. This means module functions are disabled.	–
	None	A failure is indicated by another LED (LED 3 or LED 4 are red).	–
		No power is supplied to the unit.	
LED 3	Green	The routing code of the RapidPro hardware is valid.	–
	Orange	Lights up for approx. 1 minute if you changed or removed modules.	–
		If the LED is permanently on, the routing code of the RapidPro hardware is invalid.	▪ Restore the positions of the modules on the carrier board to match the routing code. ▪ Or contact dSPACE to obtain a suitable routing code.
		If LED 3 AND LED 4 are permanently orange, the execution of the unit's software is incorrect due to a voltage drop. The carrier board is operating in shutdown mode. This means module functions are disabled. You can only change this state with a restart of the RapidPro system (power off - power on).	▪ Increase the supply voltage. ▪ Increase the current limit of the connected power supply. ▪ Connect a power supply with higher output power to the RapidPro system.
	Red	SPI (Serial Peripheral Interface) communication is faulty.	▪ Check the SPI cabling. A proper ground connection is essential. ▪ Use a low-impedance cable.
	None	A failure is indicated by another LED (LED 2 or LED 4 are red).	–
		No power is supplied to the unit.	
LED 4	Green	All internal supply voltages are in the correct voltage range.	–

LED	Display	Description	Remedy
	Orange	There are modules installed on both rails: ▪ Either the UBAT1/GND1 pins or the UBAT2/GND2 pins of the corresponding connector (F1/F2) are not connected. ▪ Either the front I/O connector F1 or the front I/O connector F2 is not connected.	Check the connection of the connectors and the pins.
		One of the internal supply voltages is not in the correct range. The carrier board is operating in shutdown mode. This means module functions are disabled.	▪ Remove the modules from the carrier board to localize the error. ▪ If the error is displayed again after restart, the carrier board is defect. Otherwise a module is defect. ▪ Reset all diagnostics via ConfigurationDesk for RapidPro.
		If LED 4 AND LED 3 are permanently orange, the execution of the unit's software is incorrect due to a voltage drop. The carrier board is operating in shutdown mode. This means module functions are disabled. You can only change this state with a restart of the RapidPro system (power off - power on).	▪ Increase the supply voltage. ▪ Increase the current limit of the connected power supply. ▪ Connect a power supply with higher output power to the RapidPro system.
	Red	The communication between the carrier board and the modules is faulty.	–
	None	A failure is indicated by another LED (LED 2 or LED 4 are red).	–
		No power is supplied to the unit.	

[1] With an additional absolute maximum tolerance of +6 V.

Temperature Sensors

Objective

The carrier board of the Power Unit provides four temperature sensors to observe the temperature on the unit's carrier board at several critical locations.

Sensor locations

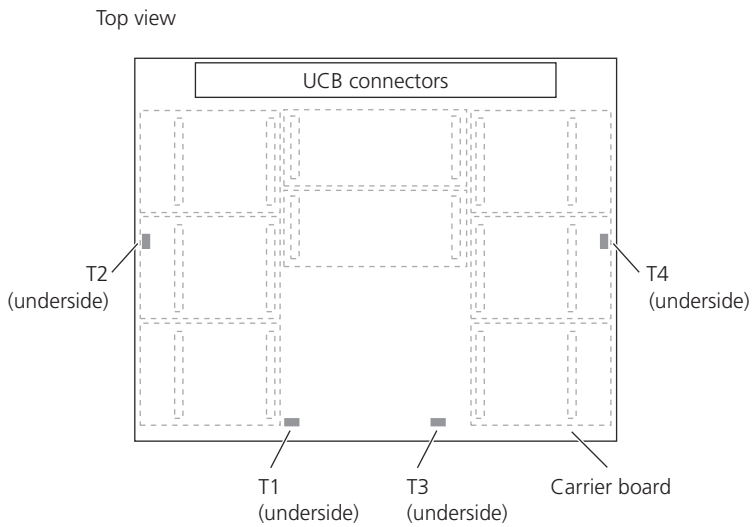

Sensor functions and permitted values

Sensor	Function	Permitted Temperature Range
T1	Monitors the temperature near load dump- and reverse protection of rail 1.	–40 … +115 °C (–40 … +239 °F)
T2	Monitors the housing temperature on the left side.	–40 … +105 °C (–40 … +221 °F)
T3	Monitors the temperature near load dump- and reverse protection of rail 2.	–40 … +115 °C (–40 … +239 °F)
T4	Monitors the housing temperature on the right side.	–40 … +105 °C (–40 … +221 °F)

ConfigurationDesk for RapidPro displays the values measured by the temperature sensors. This information can be helpful for error detection. Out-of-range temperatures do not trigger error or diagnostic messages.

Calculating the Maximum Permissible Rail Supply Voltage

Objective

The maximum permissible supply voltage on a rail of a Power Unit is limited by the power stage module with the lowest maximum operating voltage on this rail. Furthermore there is a safety factor implemented in the RapidPro firmware.

Formula for calculating

You can use the following formula to calculate the maximum supply voltage that you can connect to the UBAT1 (rail1) and UBAT2 (rail2) pins.

$U_{MaxRailSupplyVoltage}$ = (90 % of $U_{MaxModuleOperatingVoltage}$) ± 5 %

Example

The maximum operating voltage of the PS-FBD 2/1 module (DS1661) is $U_{MaxModuleOperatingVoltage}$ = 40 V.

Result:

$U_{MaxRailSupplyVoltage}$ = (90 % of 40 V) ± 5 %

$U_{MaxRailSupplyVoltage}$ = 36 V ± 5 %

$U_{MaxRailSupplyVoltage}$ = 34.2 V … 37.8 V

Tip

You find the maximum operating voltage in the data sheet of each power stage module.

Shutdown mode

Note

If the maximum rail supply voltage exceeds, all I/O channels of the Power Unit are set to shutdown mode and are deactivated. Do not exceed the lower value of the calculated $U_{MaxRailSupplyVoltage}$ range to ensure proper function of the RapidPro system.

Data Sheet

RapidPro Power Unit Data Sheet

Technical data

Parameter		Specification [1)]
General		Compact unit with ▪ 6 slots for power stage modules (PS modules) ▪ Unit connection bus (UCB) to expand RapidPro Power Unit with RapidPro Control Unit and/or SC Units
Power stage		▪ Up to 6 PS modules ▪ Up to 8 channels per PS slot ▪ Support of modules with different form factors (single-slot size and double-slot size)
Software configuration		▪ Configuration of the Power Unit and the PS modules from a host PC via ConfigurationDesk for RapidPro ▪ Displaying module version information, measurement values, module parameters (voltage range, etc.) and getting I/O pinout information
Diagnostics		Indication of different states: for example, no load, overload, undervoltage, overtemperature, short circuit
Measurement		▪ Constant measurement of values and states on each channel ▪ Displaying results with ConfigurationDesk for RapidPro ▪ Temperature monitoring at different locations on the carrier board
Modes and functions		▪ Operating mode ▪ Power save mode with wake up function (via KL15 pin) ▪ Remote-controlled operation (external power on/off via remote input) ▪ Powered-off function: The unit is switched off, if the supply voltage drops under a defined voltage level.
Electrical characteristics	Remote-controlled operation	▪ Power-on voltage: > 4 V ▪ Power-off voltage: < 3 V
	Power-up state	Defined "powered-off" state during initialization and booting
	I/O protection	Overvoltage protection for the PS module pins at the front I/O connector depends on the PS modules
	Power supply	▪ +6 V … +54 V DC [2)] ▪ Load dump protection up to +100 V

Parameter		Specification [1]
		▪ Reverse voltage protection up to –100 V
	Output voltage	Depends on PS module
	Output current	Max. 10 A per rail if PS-FBD 2/1, PS-HSD 6/1, PS-LSD 6/1 modules are installed. For PS-DINJ 2/1, PS-HCFBD 1/1, or PS-HCHBD 2/1 see module specification.
	Standby current (KL15 off)	< 10 mA (typ. 8 mA)
	Power consumption [3] (without modules)	Approx. 4 W
	Power consumption [3] (with modules)	Approx. 10 W (depends on the PS modules used) **Note** Use input power connection cables with matching cross-sections. The total input power of the RapidPro Power Unit with connected actuators can be in the range of several hundred watts (W) up to kilowatts (kW), depending on the actuators used and the operating conditions.
Mechanical characteristics	Housing	▪ Aluminum box with cooling fins ▪ Passive cooling, no fan ▪ Easy insertion of modules ▪ Anti-vibration system locks the modules against accidental disconnection ▪ Housing setup allows flexible assembling (stack mount, single unit mount)
	Connectors	▪ Front panel with: – I/O connectors for connection to external devices (i.e., actuators) – Host PC connector for communication with the host PC (USB1.1 and USB 2.0 compatible) ▪ Rear panel with: – I/O connectors to connect signals to a dSPACE system (only required if the Power Unit is used as a single unit)
	Status LEDs	▪ 6 LEDs displaying states and errors

Parameter		Specification [1]	
		▪ Integrated into the front panel	
	Physical size (with cover and base plate)	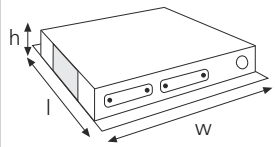	▪ l: 208 mm (8.19 in.) ▪ w: 225 mm (8.86 in.) ▪ h: 36 mm (1.42 in.)
	Physical size (without cover and base plate)	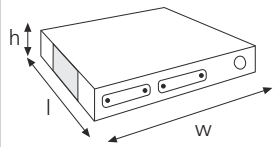	▪ l: 172.5 mm (6.79 in.) ▪ w: 225 mm (8.86 in.) ▪ h: 26 mm (1.02 in.)
	Weight	▪ Approx. 1.6 kg (3.6 lb.) with cover and base plate ▪ Approx. 1.1 kg (2.5 lb.) without cover and base plate	
Environmental conditions	Operating temperature	–40 … +85 °C (–40 … +185 °F) [4]	
	Storage temperature	–65 … +125 °C (–85 … +257 °F)	
	Humidity	0 … 95%, noncondensing	
	Shock	ISO 16750-3:2007 / 4.2.2.	Test conditions: ▪ Linear shock (1/2 sine pulse), 6-axis ▪ 500 m/s^2, 6 ms, 10 pulses per axis ▪ Operating
	Vibration	ISO 16750-3:2007 / 4.1.2.4 Test IV	Test conditions: Broad band noise, 2h per axis, RMS-acceleration 27,8 m/s^2
		EN 60068-2-6	Test conditions: ▪ Swept sine, 1 octave per minute, 3-axis test ▪ 5 ... 2000 Hz, up to 5 g, 2 sweeps per axis ▪ Operating
EMC standards		EN 61326-1 Table 2	Immunity standard for industrial environments [5]
		CISPR 11, EN 55011 Group 1, Class A	Emission standard for industrial environments
CE compliance		2014/30/EU (Electromagnetic Compatibility Directive)	

[1] Unless stated otherwise, the specifications are valid only if the dSPACE hardware is correctly powered, switched on, and ready for operation.
[2] With an additional absolute maximum tolerance of +6 V.
[3] Typical value at T_Housing = +25 °C (+77 °F).
[4] The total output capacity of the RapidPro system depends on the modules used and the assembly (single unit or stack). It is limited by the thermal capacity of the housing. As long as the maximum housing temperature T_Housing = +95 °C (+203 °F) is not exceeded, the function of the RapidPro system is guaranteed.
[5] Tested with an I/O cable length < 3 m. Connected cables might affect the specified characteristics due to physical effects such as crosstalk, voltage drops, and influences through electromagnetic fields.

RapidPro Control Unit

Short description

The RapidPro Control Unit is a component of the RapidPro hardware. It is a compact aluminum box that is equipped with a microcontroller module and also provides slots for signal conditioning modules and communication modules.

Where to go from here

Information in this section

Unit Overview 132
Information on the unit's features, components, and functionality will help you assess its possible uses.

Microcontroller Module 138
The central component of the Control Unit is its microcontroller module (MC module).

Suitable Slots for SC Modules 139
Some of the slots on the Control Unit are for installing signal conditioning modules (SC modules). Which slot you can install which module in, depends on the assembly of your RapidPro hardware.

Connectors and Pinouts 157
Information on the unit's external I/O connectors will help you, for example, to build the cable harness.

Unit in Use 163
You have access to information (i.e., status LEDs, temperatures on the unit) which the unit provides during operation.

Data Sheet 168
The data sheet summarizes the technical data of the Control Unit.

Unit Overview

Objective

The Control Unit consists of an enclosure that provides external connectors and contains a carrier board that has slots, for example, for RapidPro SC modules.

Where to go from here

Information in this section

Unit Features..... 132
Housing Components..... 133
Carrier Board Components..... 134
Block Diagram..... 136
COM Modules..... 137

Unit Features

Use case

You can use the Control Unit as an I/O subsystem of a dSPACE rapid control prototyping system (RCP system), such as MicroAutoBox II, or a modular system based on the DS1007 PPC Processor Board and the DS4121 ECU Interface Board. In this use case the microcontroller MPC565 is the central component of the Control Unit's microcontroller module (MC module).

Communication interfaces

The unit provides two slots for communication interface modules (COM modules). In this way you can connect the Control Unit to a host PC, and/or to an RCP system (master). For information, refer to COM Modules on page 137.

Support of signal conditioning modules

- 6 slots for signal conditioning modules (SC modules)
- Support of SC modules with up to 8 channels per slot
- Support of SC modules with different form factors (single-slot size and double-slot size)
- Same SC modules as used in the SC Unit
- Easy configuration of the module parameters with ConfigurationDesk for RapidPro software

Designed for in-vehicle use

- Wide supply voltage range, reverse- and overvoltage-protected
- Remote control input to switch the unit on or off
- Sleep and wake-up modes for power management

- Automotive temperature range
- Locking system for all exchangeable modules on the carrier board against accidental disconnection

Flexible assembly

The unit can be used either as a single unit or with additional SC Units and/or Power Units. These give the RapidPro system more I/O functionality. You can assemble the units in a stack for use as one physical unit with internal electrical connection via unit connection bus (UCB).

For detailed information, refer to Unit connection bus (UCB) on page 137.

More features

For a complete list of the unit's features, refer to RapidPro Control Unit Data Sheet on page 168.

Housing Components

Objective

The housing of the Control Unit is modular in design, providing access to the input and output signals via its connectors.

Exterior view

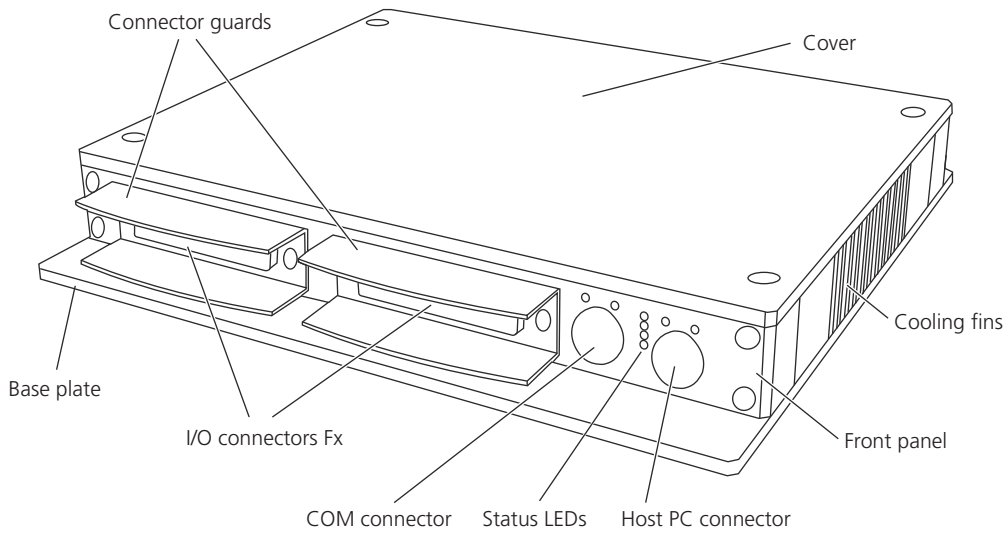

Components and their functions

The *front panel* provides different connectors:

- *I/O connectors Fx* provide the connections to the power supply (UBAT) and external devices.

- The *host PC connector* provides the communication with your host PC based on a USB interface. It is used for module configuration and diagnostics.
- *COM connector* for communication with your rapid control prototyping system, such as dSPACE's MicroAutoBox (only if the Control Unit is used as I/O subsystem).
- The *status LEDs* display different states of the Control Unit. They can be used for troubleshooting.

For detailed information on the connectors, their pinout, and the signal descriptions, refer to Front Panel Connectors on page 157.

For the meaning of the LEDs, refer to Status LEDs on page 163.

Connector labels

The labels of the I/O connectors on a front panel always begin with an 'F'. The communication connectors are labeled 'COM' and 'Host PC'. The labels are printed near the connectors at the front of the panel.

Carrier Board Components

Objective

The carrier board inside the Control Unit holds different components.

Interior view

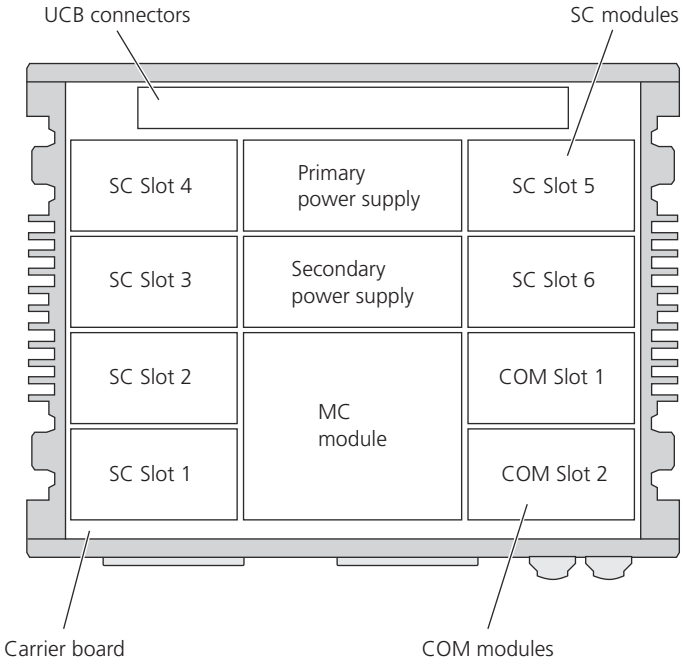

Components and their functions

- The *carrier board* comprises power supplies, a MC module, 6 *SC slots* for signal conditioning modules (SC modules), and 2 slots for communication modules (COM modules).
- The *MC module* is equipped with a MPC565 to extend an existing RCP system with additional I/O functionality.
- 2 *COM slots* for communication modules (COM modules) to connect the Control Unit to a host PC, and/or to an RCP system (master), via high-speed serial link (LVDS).
- The *power supply* of the Control Unit is modular in design. It is split into a primary and a secondary power supply for easy adaptation to different power supply requirements.
- The *UCB connectors* provide the internal connection to other RapidPro units via the unit connection bus (UCB).

Block Diagram

Overview illustration

The block diagram shows the functional units and their interrelations.

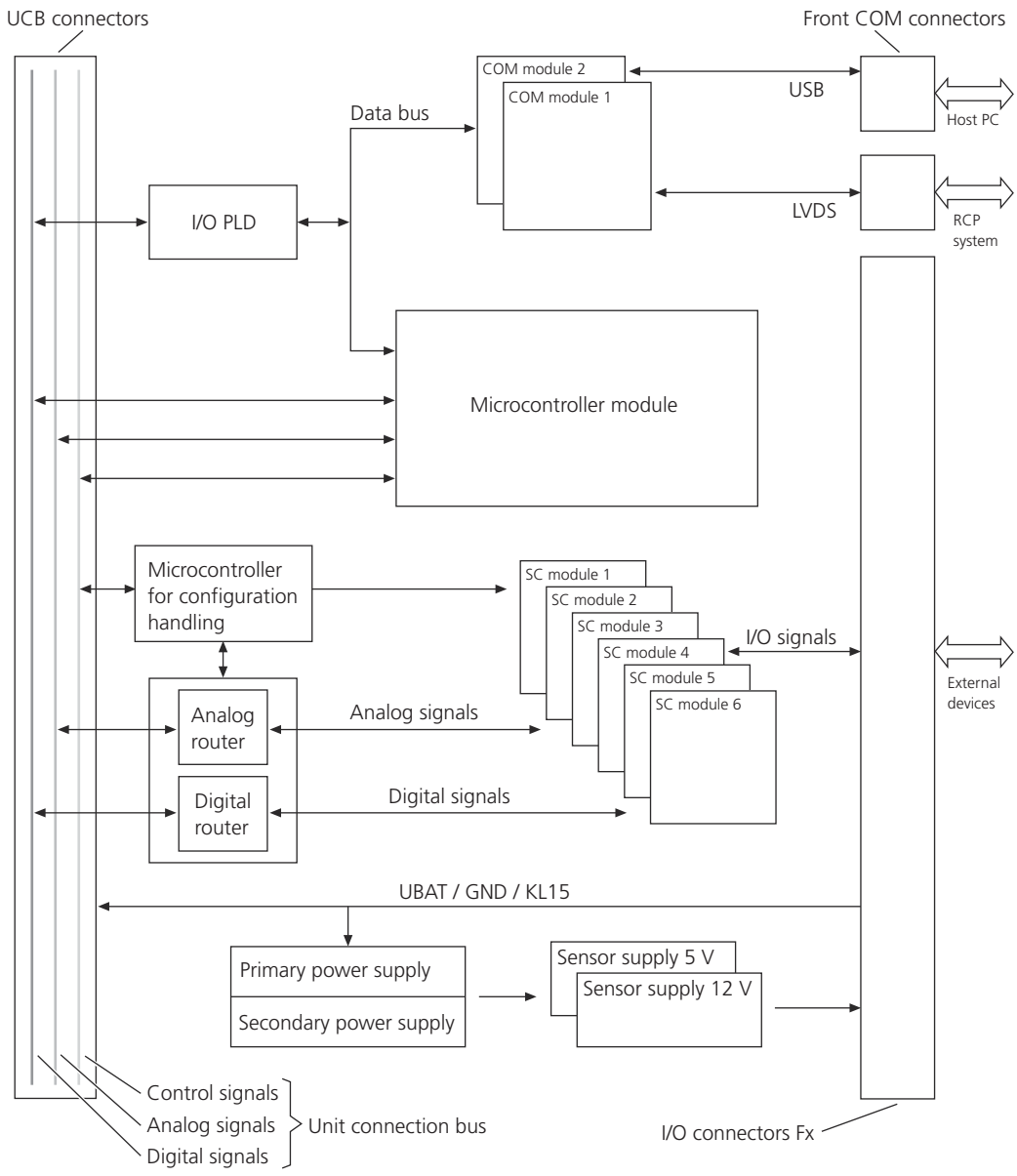

Signal routing

The digital and analog routers are controlled by the on-board microcontroller, which needs routing code (provided by dSPACE) containing pin-mapping information on the installed modules. This routing code defines which SC module can be installed on which slot.

For details, refer to Suitable Slots for SC Modules on page 139.

Unit connection bus (UCB)

The unit connection bus (UCB) includes digital, analog and control signals and is located on the UCB connectors. If one or more SC and/or Power Units are combined with the Control Unit, the UCB is the connection between the units.

Additionally the supply voltage (UBAT and GND) connected on the front I/O connector of the unit is passed on the UCB connectors. In this way all units in a stack get their power supply via the Control Unit. However, if there is a Power Unit in the stack it must be additionally connected to the power supply for driving loads at its outputs.

Characteristics of the I/O PLD

The programmable logic device (PLD) is used to enlarge the functionality of the microcontroller module (MC module).

Sensor supply 5 V/12 V

You can use the sensor supply for sensors connected to the unit. To avoid poor quality of the analog input signals, the sensor supply output is galvanically isolated from the internal supply voltages on the unit.

Note

The sensor supply voltages are switched on if the RapidPro system executes an application.

COM Modules

Available modules

The table below gives an overview on the communication modules (COM modules) and their functions.

Name	Identification	Description	Use Case
COM-LVDS 1/1	DS1606	▪ 1 channel LVDS interface module ▪ LVDS (ECU) interface for master-slave communication with MicroAutoBox II or modular system (DS1007 with DS4121)	I/O subsystem
COM-USB-CI 1/1	DS1609	▪ 1 channel USB configuration interface module ▪ USB 1.1 and USB 2.0 compatible ▪ For host communication (hardware configuration)	

Microcontroller Module

Objective

The Control Unit is equipped with a microcontroller module (MC module).

MC-MPC565 1/1 Module

Features of the MC-MPC565 1/1

Basic features are:

- Based on the microcontroller MPC565
  - 56 MHz, 4 MB external SRAM, 16 MB external flash, 1 MB internal flash
  - 3 TPUs with 16 channels each
  - 22-channel modular I/O system (MIOS)
  - 2 queued A/D converters with internal sample/hold
    - 40 A/D converter channels
    - 10-bit resolution
    - 4 µs conversion time per channel

For further information on the microcontroller, refer to the data sheet of the MPC565.

Identification

You can identify the MC-MPC565 1/1 module unambiguously by its dSPACE number: DS1602.

Suitable Slots for SC Modules

Objective

If you want to install, change or rearrange RapidPro modules in a single unit or a stack, you have to consider some restrictions.

Definition via routing code

Which module can be installed on which slot is defined via routing code. This code varies according to the assembly (single unit or stack) and the unit you use (Control Unit with MPC565).

The routing code is stored in the specific single unit or stack with UCB. You can identify it by its unique RoutingID, which can be displayed via ConfigurationDesk for RapidPro.

Where to go from here

Information in this section

Installation of SC Modules in a Single Control Unit..... 139

Installation of SC Modules in a Control Unit that is Part of a Stack with UCB..... 140

Installation of SC Modules in a Single Control Unit

Single Control Unit with MPC565 – RoutingID 16384

Objective

Which SC module can be installed on which slot of a single Control Unit (MPC565) is defined via routing code.

Note

If you rearrange the modules on the carrier board contrary to the table below, the routing code stored in the units has to be modified by dSPACE.

Installing or rearranging an SC-UHEGO 2/1 module (DS1639)

If you want to install or rearrange an SC-UHEGO 2/1 module (DS1639) in a single unit or a stack with UCB, you need a custom-built routing code. Contact dSPACE for an appropriate routing code.

RoutingID 16384 – Control Unit (MPC565)

The following table shows which SC modules can be installed on which slot of the Control Unit with MC-MPC565 1/1 module and suit the specifics of the unit's microcontroller channels you need in your application.

Single Control Unit (RoutingID 16384)	Slot	Signal	MPC565 Channel	Possible Module
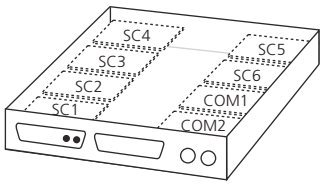	SC1	6 x TPU	TPU_A: 1 … 6	▪ SC-AI 4/1 [1] (DS1631) ▪ SC-AI 10/1 [2] (DS1633) ▪ SC-DI 8/1 (DS1642) ▪ SC-DO 8/1 [3] (DS1646) ▪ SC-DO 8/2 [3] (DS1647) ▪ SC-SENS 4/1 [4] (DS1626) ▪ SC-CCDI 6/1 (DS1637)
		2 x ADC (TRIG)	1 … 2	
		8 x analog	1 … 8	
	SC2	8 x TPU	TPU_A: 9 … 16	
		8 x analog	9 … 16	
	SC3	8 x TPU	TPU_B: 1 … 8	
		8 x analog	17 … 24	
	SC4	4 x analog	25 … 28	
		8 x bit I/O	1 … 8	
	SC5	8 x analog	29 … 36	
		8 x bit I/O	9 … 16	
	SC6	4 x analog	37 … 40	
		8 x bit I/O	17 … 24	

[1] You can insert a maximum of 4 SC-AI 4/1 modules in a unit to avoid exceeding the unit's maximum possible power consumption.
[2] The SC-AI 10/1 has 10 channels and requires two adjacent slots.
[3] If an SC-DO 8/1 or SC-DO 8/2 module is inserted in the first slot (SC1) you can use only a maximum of 6 module output channels.
[4] The SC-SENS 4/1 module is a sensor supply module and does not have signal connections to the Control Unit's microcontroller channels. Thus, you can insert an SC-SENS 4/1 module in any available slot. You can insert a maximum of 2 SC-SENS 4/1 modules in a unit to avoid exceeding the unit's maximum possible power consumption.

Installation of SC Modules in a Control Unit that is Part of a Stack with UCB

Where to go from here

Information in this section

Stack with Control Unit (MPC565) and SC Unit – RoutingID 16553 for SC-TC 8/1 Module 141

Stack with UCB Consisting of Control Unit (MPC565), SC Unit, and Power Unit – RoutingID 28555 for SC-TC 8/1 Module 142

Stack with Control Unit (MPC565) and Power Unit – RoutingID 35429 144

Stack with Control Unit (MPC565), Power, and SC Unit – RoutingID 11550 145

Stack with Control Unit (MPC565), SC Unit, and Power Unit – RoutingID 50551 for SC-TC 8/1 Module 146

Stack with Control Unit (MPC565), Two SC Units, and Power Unit – RoutingID 53202 for SC-TC 8/1 Module 148

Stack with Control Unit (MPC565), Power, and SC Unit – RoutingID 29752 for Engine Control 149

Stack with Control Unit (MPC565), Power Unit, and SC Unit – RoutingID 61376 for PS-DINJ 2/1 Module 151

Stack with Control Unit (MPC565), two Power Units, and SC Unit – RoutingID 65422 for PS-DINJ 2/1 Module 153

Stack with Control Unit (MPC565), Two SC Units, and Power Unit – RoutingID 10243 for SC-TC 8/1 Module and PS-DINJ 2/1 Module 155

Stack with Control Unit (MPC565) and SC Unit – RoutingID 16553 for SC-TC 8/1 Module

Objective

The routing code with RoutingID 16553 applies to the following configuration:

Stack with UCB consisting of:

- Control Unit with MC-MPC565 1/1 module (layer 1)
- SC Unit (layer 2) with one or more SC-TC 8/1 modules

Note

The routing of the Control Unit in this stack is identical to the routing of a single Control Unit with RoutingID 16384. Thus, an existing single Control Unit can be easily extended with an SC Unit with SC-TC 8/1 module(s) without changing the assembly of the other modules in the unit.

Note

If you rearrange the modules on the carrier boards contrary to the table below, the routing code stored in the units has to be modified by dSPACE.

Installing or rearranging an SC-UHEGO 2/1 module (DS1639)

If you want to install or rearrange an SC-UHEGO 2/1 module (DS1639) in a single unit or a stack with UCB, you need a custom-built routing code. Contact dSPACE for an appropriate routing code.

RoutingID 16553 – Control Unit (MPC565)

The following table shows which SC modules can be installed on which slot of the unit, and which suit the specifics of the Control Unit's microcontroller channels you need in your application.

Stack with UCB (RoutingID 16553)	Slot	Signal	MPC565 Channel	Possible Module
Control Unit (layer 1) 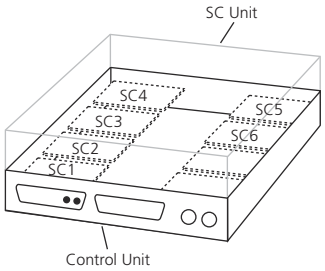	SC1	6 x TPU	TPU_A: 1 … 6	▪ SC-AI 4/1 [1] (DS1631) ▪ SC-AI 10/1 [2] (DS1633) ▪ SC-DI 8/1 (DS1642) ▪ SC-DO 8/1 [3] (DS1646) ▪ SC-DO 8/2 [3] (DS1647) ▪ SC-SENS 4/1 [4] (DS1626) ▪ SC-CCDI 6/1 (DS1637)
		2 x ADC (TRIG)	1 … 2	
		8 x analog	1 … 8	
	SC2	8 x TPU	TPU_A: 9 … 16	
		8 x analog	9 … 16	
	SC3	8 x TPU	TPU_B: 1 … 8	
		8 x analog	17 … 24	
	SC4	8 x bit I/O	1 … 8	
		4 x analog	25 … 28	
	SC5	8 x bit I/O	9 … 16	
		8 x analog	29 … 36	
	SC6	8 x bit I/O	17 … 24	
		4 x analog	37 … 40	

[1] You can insert a maximum of 4 SC-AI 4/1 modules in a unit to avoid exceeding the unit's maximum possible power consumption.

[2] The SC-AI 10/1 has 10 channels and requires two adjacent slots. The first slot has to process 8 channels and the second slot 2 channels. You can mount it on slots SC5 … SC6.

[3] If an SC-DO 8/1 or SC-DO 8/2 module is inserted in the first slot (SC1) you can use only a maximum of 6 module output channels.

[4] The SC-SENS 4/1 module is a sensor supply module and does not have signal connections to the Control Unit's microcontroller channels. Thus, you can insert an SC-SENS 4/1 module in any available slot. You can insert a maximum of 2 SC-SENS 4/1 modules in a unit to avoid exceeding the unit's maximum possible power consumption.

Stack with UCB Consisting of Control Unit (MPC565), SC Unit, and Power Unit – RoutingID 28555 for SC-TC 8/1 Module

Objective

The routing code with RoutingID 28555 applies to the following configuration:

Stack with UCB consisting of:

- Control Unit with MC-MPC565 1/1 module (layer 1)
- SC Unit (layer 2) with one or more SC-TC 8/1 modules
- Power Unit (layer 3)

Note

The routing of the Control Unit and the Power Unit in this stack is identical to the routing of the double stack consisting of Control and Power Unit with RoutingID 35429. Thus, an existing double stack can be easily extended with an SC Unit with SC-TC 8/1 module(s) without changing the assembly of the other modules in the stack.

Note

If you rearrange the modules on the carrier boards contrary to the table below, the routing code stored in the units has to be modified by dSPACE.

Installing or rearranging an SC-UHEGO 2/1 module (DS1639)

If you want to install or rearrange an SC-UHEGO 2/1 module (DS1639) in a single unit or a stack with UCB, you need a custom-built routing code. Contact dSPACE for an appropriate routing code.

RoutingID 28555 – Control Unit (MPC565)

The following table shows which SC modules can be installed on which slot of the unit, and which suit the specifics of the Control Unit's microcontroller channels you need in your application.

Stack with UCB (RoutingID 28555)	Slot	Signal	MPC565 Channel	Possible Module
Control Unit (layer 1) 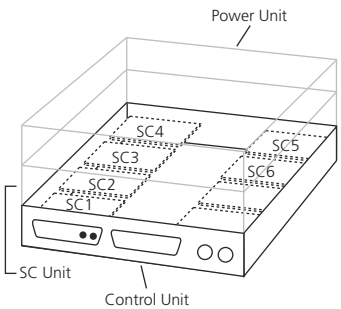 	SC1	6 x TPU	TPU_A: 1 … 6	▪ SC-DI 8/1 (DS1642) ▪ SC-DO 8/1 [1] (DS1646) ▪ SC-DO 8/2 [1] (DS1647) ▪ SC-SENS 4/1 [2] (DS1626) ▪ SC-CCDI 6/1 (DS1637)
		2 x ADC (TRIG)	1 … 2	
	SC2	8 x TPU	TPU_A: 9 … 16	▪ SC-AI 4/1 [3] (DS1631) ▪ SC-DI 8/1 (DS1642) ▪ SC-DO 8/1 (DS1646) ▪ SC-DO 8/2 (DS1647) ▪ SC-SENS 4/1 [2] (DS1626) ▪ SC-CCDI 6/1 (DS1637)
		4 x analog	13 … 16	
	SC3	8 x TPU	TPU_B: 1 … 8	▪ SC-AI 4/1 [3] (DS1631) ▪ SC-AI 10/1 [4] (DS1633) ▪ SC-DI 8/1 (DS1642) ▪ SC-DO 8/1 (DS1646) ▪ SC-DO 8/2 (DS1647) ▪ SC-SENS 4/1 [2] (DS1626)
		8 x analog	17 … 24	
	SC4	4 x analog	25 … 28	
		8 x bit I/O	1 … 8	
	SC5	8 x analog	29 … 36	

Stack with UCB (RoutingID 28555)	Slot	Signal	MPC565 Channel	Possible Module
		8 x bit I/O	9 … 16	▪ SC-CCDI 6/1 (DS1637)
	SC6	4 x analog	37 … 40	
		8 x bit I/O	17 … 24	

1) If an SC-DO 8/1 or SC-DO 8/2 module is inserted in the first slot (SC1) you can use only a maximum of 6 module output channels.
2) The SC-SENS 4/1 module is a sensor supply module and does not have signal connections to the Control Unit's microcontroller channels. Thus, you can insert an SC-SENS 4/1 module in any available slot. You can insert a maximum of 2 SC-SENS 4/1 modules in a unit to avoid exceeding the unit's maximum possible power consumption.
3) You can insert a maximum of 4 SC-AI 4/1 modules in a unit to avoid exceeding the unit's maximum possible power consumption.
4) The SC-AI 10/1 has 10 channels and requires two adjacent slots in the Control Unit. The first slot has to process 8 channels and the second slot 2 channels. You can mount it on slots SC3 … SC4, and SC5 … SC6.

Stack with Control Unit (MPC565) and Power Unit – RoutingID 35429

Objective

Which SC module can be installed on which slot of a Control Unit (MPC565) in a stack with UCB containing a Control Unit and a Power Unit is defined via routing code.

Note

If you rearrange the modules on the carrier board contrary to the tables below, the routing code stored in the units has to be modified by dSPACE.

Installing or rearranging an SC-UHEGO 2/1 module (DS1639)

If you want to install or rearrange an SC-UHEGO 2/1 module (DS1639) in a single unit or a stack with UCB, you need a custom-built routing code. Contact dSPACE for an appropriate routing code.

RoutingID 35429 – Control Unit (MPC565)

The routing code with the RoutingID 35429 is valid only if the stack consists of a Control Unit with MC-MPC565 1/1 module (layer 1) and a Power Unit (layer 2).

The following table shows which SC modules can be installed on which slot of the unit and suit the specifics of the Control Unit's microcontroller channels you need in your application.

Stack with UCB (RoutingID 35429)	Slot	Signal	MPC565 Channel	Possible Module
Control Unit (layer 1) 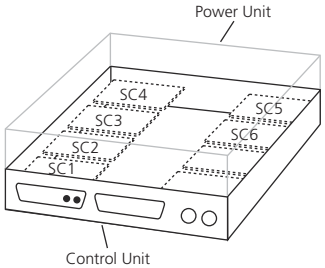	SC1	6 x TPU	TPU_A: 1 … 6	▪ SC-DI 8/1 (DS1642) ▪ SC-DO 8/1 [1] (DS1646) ▪ SC-DO 8/2 [1] (DS1647) ▪ SC-SENS 4/1 [2] (DS1626) ▪ SC-CCDI 6/1 (DS1637)
		2 x ADC (TRIG)	1 … 2	
	SC2	8 x TPU	TPU_A: 9 … 16	▪ SC-AI 4/1 [3] (DS1631) ▪ SC-DI 8/1 (DS1642) ▪ SC-DO 8/1 (DS1646) ▪ SC-DO 8/2 (DS1647) ▪ SC-SENS 4/1 [2] (DS1626) ▪ SC-CCDI 6/1 (DS1637)
		4 x analog	13 … 16	
	SC3	8 x TPU	TPU_B: 1 … 8	▪ SC-AI 4/1 [3] (DS1631) ▪ SC-AI 10/1 [4] (DS1633) ▪ SC-DI 8/1 (DS1642) ▪ SC-DO 8/1 (DS1646) ▪ SC-DO 8/2 (DS1647) ▪ SC-SENS 4/1 [2] (DS1626) ▪ SC-CCDI 6/1 (DS1637)
		8 x analog	17 … 24	
	SC4	4 x analog	25 … 28	
		8 x bit I/O	1 … 8	
	SC5	8 x analog	29 … 36	
		8 x bit I/O	9 … 16	
	SC6	4 x analog	37 … 40	
		8 x bit I/O	17 … 24	

[1] If an SC-DO 8/1 or SC-DO 8/2 module is inserted in the first slot (SC1) you can use only a maximum of 6 module output channels.

[2] The SC-SENS 4/1 module is a sensor supply module and does not have signal connections to the Control Unit's microcontroller channels. Thus, you can insert an SC-SENS 4/1 module in any available slot. You can insert a maximum of 2 SC-SENS 4/1 modules in a unit to avoid exceeding the unit's maximum possible power consumption.

[3] You can insert a maximum of 4 SC-AI 4/1 modules in a unit to avoid exceeding the unit's maximum possible power consumption.

[4] The SC-AI 10/1 has 10 channels and requires two adjacent slots in the Control Unit. The first slot has to process 8 channels and the second slot 2 channels. You can mount it on slots SC3 … SC4, and SC5 … SC6.

Stack with Control Unit (MPC565), Power, and SC Unit – RoutingID 11550

Objective

Which SC module can be installed on which slot of a Control Unit (MPC565) in a stack with UCB containing a Control, SC, and a Power Unit is defined via routing code.

Note

If you rearrange the modules on the carrier board contrary to the tables below, the routing code stored in the units has to be modified by dSPACE.

Installing or rearranging an SC-UHEGO 2/1 module (DS1639)

If you want to install or rearrange an SC-UHEGO 2/1 module (DS1639) in a single unit or a stack with UCB, you need a custom-built routing code. Contact dSPACE for an appropriate routing code.

RoutingID 11550 – Control Unit (MPC565)

The routing code with the RoutingID 11550 is valid only if the stack consists of a Control Unit with MC-MPC565 1/1 module (layer 1), SC Unit (layer 2), and a Power Unit (layer 3).

The following table shows which SC modules can be installed on which slot of the unit and suit the specifics of the Control Unit's microcontroller channels you need in your application.

Stack with UCB (RoutingID 11550)	Slot	Signal	MPC565 Channel	Possible Module
Control Unit (layer 1) 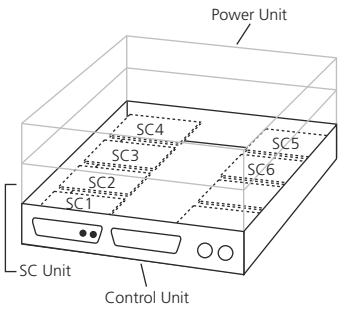 	SC1	6 x TPU	TPU_A: 1 … 6	▪ SC-DI 8/1 (DS1642) ▪ SC-DO 8/1 [1] (DS1646) ▪ SC-DO 8/2 [1] (DS1647) ▪ SC-SENS 4/1 [2] (DS1626) ▪ SC-CCDI 6/1 (DS1637)
		2 x ADC (TRIG)	1 … 2	
	SC2	8 x TPU	TPU_A: 9 … 16	
	SC3	8 x TPU	TPU_B: 1 … 8	
	SC4	8 x bit I/O	1 … 8	
	SC5	8 x bit I/O	9 … 16	
	SC6	8 x bit I/O	17 … 24	

[1] If an SC-DO 8/1 or SC-DO 8/2 module is inserted in the Control Unit's first slot (SC1) or in the SC Unit's third slot (SC3) you can use only a maximum of 6 module output channels.

[2] The SC-SENS 4/1 module is a sensor supply module and does not have signal connections to the Control Unit's microcontroller channels. Thus, you can insert an SC-SENS 4/1 module in any available slot. You can insert a maximum of 2 SC-SENS 4/1 modules in a unit to avoid exceeding the unit's maximum possible power consumption.

Stack with Control Unit (MPC565), SC Unit, and Power Unit – RoutingID 50551 for SC-TC 8/1 Module

Objective

The routing code with RoutingID 50551 applies to the following configuration:

Stack with UCB consisting of:

- Control Unit with MC-MPC565 1/1 module (layer 1)
- SC Unit (layer 2) with one or more SC-TC 8/1 modules
- Power Unit (layer 3)

Note

The routing of the Control Unit and the Power Unit in this stack is identical to the routing of the triple stack consisting of Control Unit, SC Unit, and Power Unit with RoutingID 11550. Thus, the SC Unit of an existing triple stack can be easily replaced by an SC Unit with SC-TC 8/1 module(s) without changing the assembly of the other modules in the stack.

Note

If you rearrange the modules on the carrier boards contrary to the table below, the routing code stored in the units has to be modified by dSPACE.

Installing or rearranging an SC-UHEGO 2/1 module (DS1639)

If you want to install or rearrange an SC-UHEGO 2/1 module (DS1639) in a single unit or a stack with UCB, you need a custom-built routing code. Contact dSPACE for an appropriate routing code.

RoutingID 50551 – Control Unit (MPC565)

The following table shows which SC modules can be installed on which slot of the unit, and which suit the specifics of the Control Unit's microcontroller channels you need in your application.

Stack with UCB (RoutingID 50551)	Slot	Signal	MPC565 Channel	Possible Module
Control Unit (layer 1) 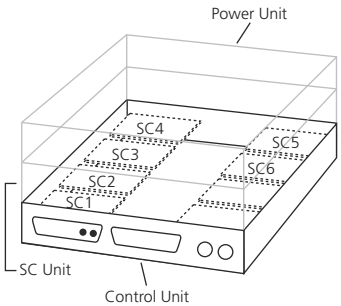	SC1	6 x TPU	TPU_A: 1 … 6	▪ SC-DI 8/1 (DS1642) ▪ SC-DO 8/1 [1] (DS1646) ▪ SC-DO 8/2 [1] (DS1646) ▪ SC-SENS 4/1 [2] (DS1626) ▪ SC-CCDI 6/1 (DS1637)
		2 x ADC (TRIG)	1 … 2	
	SC2	8 x TPU	TPU_A: 9 … 16	
	SC3	8 x TPU	TPU_B: 1 … 8	
	SC4	8 x bit I/O	1 … 8	
	SC5	8 x bit I/O	9 … 16	
	SC6	8 x bit I/O	17 … 24	

[1] If an SC-DO 8/1 or SC-DO 8/2 module is inserted in the Control Unit's first slot (SC1) you can use only a maximum of 6 module output channels.

[2] The SC-SENS 4/1 module is a sensor supply module and does not have signal connections to the Control Unit's microcontroller channels. Thus, you can insert an SC-SENS 4/1 module in any available slot. You can insert a maximum of 2 SC-SENS 4/1 modules in a unit to avoid exceeding the unit's maximum possible power consumption.

Stack with Control Unit (MPC565), Two SC Units, and Power Unit – RoutingID 53202 for SC-TC 8/1 Module

Objective

The routing code with RoutingID 53202 applies to the following configuration:

Stack with UCB consisting of:

- Control Unit with MC-MPC565 1/1 module (layer 1)
- SC Unit 1 (layer 2)
- SC Unit 2 (layer 3) with one or more SC-TC 8/1 modules
- Power Unit (layer 4)

Note

The routing of the Control Unit and the Power Unit in this stack is identical to the routing of the triple stack consisting of Control Unit, SC Unit, and Power Unit with RoutingID 11550. Thus, an existing triple stack can be easily extended with an SC Unit with SC-TC 8/1 module(s) without changing the assembly of the other modules in the stack.

Note

If you rearrange the modules on the carrier boards contrary to the table below, the routing code stored in the units has to be modified by dSPACE.

Installing or rearranging an SC-UHEGO 2/1 module (DS1639)

If you want to install or rearrange an SC-UHEGO 2/1 module (DS1639) in a single unit or a stack with UCB, you need a custom-built routing code. Contact dSPACE for an appropriate routing code.

RoutingID 53202 – Control Unit (MPC565)

The following table shows which SC modules can be installed on which slot of the unit, and which suit the specifics of the Control Unit's microcontroller channels you need in your application.

Stack with UCB (RoutingID 53202)	Slot	Signal	MPC565 Channel	Possible Module
Control Unit (layer 1) 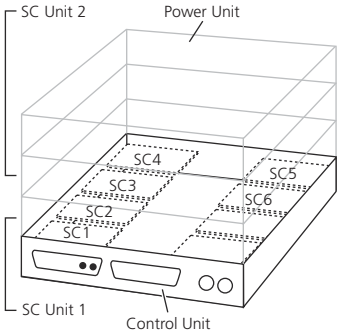	SC1	6 x TPU	TPU_A: 1 … 6	▪ SC-DI 8/1 (DS1642) ▪ SC-DO 8/1 [1] (DS1646) ▪ SC-DO 8/2 [1] (DS1647) ▪ SC-SENS 4/1 [2] (DS1626) ▪ SC-CCDI 6/1 (DS1637)
		2 x ADC (TRIG)	1 … 2	
	SC2	8 x TPU	TPU_A: 9 … 16	
	SC3	8 x TPU	TPU_B: 1 … 8	
	SC4	8 x bit I/O	1 … 8	
	SC5	8 x bit I/O	9 … 16	
	SC6	8 x bit I/O	17 … 24	

[1] If an SC-DO 8/1 or SC-DO 8/2 module is inserted in the Control Unit's first slot (SC1) you can use only a maximum of 6 module output channels.

[2] The SC-SENS 4/1 module is a sensor supply module and does not have signal connections to the Control Unit's microcontroller channels. Thus, you can insert an SC-SENS 4/1 module in any available slot. You can insert a maximum of 2 SC-SENS 4/1 modules in a unit to avoid exceeding the unit's maximum possible power consumption.

Stack with Control Unit (MPC565), Power, and SC Unit – RoutingID 29752 for Engine Control

Objective

Which SC module can be installed on which slot of a Control Unit (MPC565) in a stack with UCB containing a Control, SC, and a Power Unit is defined via routing code that is optimized for engine control.

Note

If you rearrange the modules on the carrier board contrary to the tables below, the routing code stored in the units has to be modified by dSPACE.

Installing or rearranging an SC-UHEGO 2/1 module (DS1639)

If you want to install or rearrange an SC-UHEGO 2/1 module (DS1639) in a single unit or a stack with UCB, you need a custom-built routing code. Contact dSPACE for an appropriate routing code.

RoutingID 29752 – Control Unit (MPC565) – engine control

The routing code with the RoutingID 29752 is valid only if the stack consists of a Control Unit with MC-MPC565 1/1 module (layer 1), SC Unit (layer 2), and a Power Unit (layer 3).

The following table shows which SC modules can be installed on which slot of the unit and suit the specifics of the Control Unit's microcontroller channels you need in your application.

Stack with UCB (RoutingID 29752) – Engine Control	Slot	Signal	MPC565 Channel	Possible Module
Control Unit (layer 1) 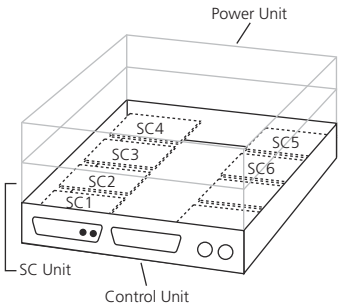 	SC1	1 x TPU, used as crankshaft signal	TPU_A: 3	▪ SC-DI 8/1 (DS1642) ▪ SC-CCDI 6/1 (DS1637) ▪ SC-SENS 4/1 [1] (DS1626)
		2 x TPU, used as camshaft signals	TPU_A: 4, 5	
		1 x ADC (TRIG)	1	
		4 x bit I/O	26 … 29	
	SC2	2 x MIOS (PWM), used to monitor the lambda probe heater control [2]	2, 3	▪ SC-EGOS 2/1 (DS1634) ▪ SC-SENS 4/1 [1] (DS1626)
		2 x bit I/O, used as Ri measurement controls	3, 4	
		4 x analog, used as module outputs	25 … 28	
	SC3	1 x TPU, used for generating the measurement window	TPU_A: 16	▪ SC-KNOCK 4/1 (DS1635) ▪ SC-SENS 4/1 [1] (DS1626)
		1 x SDI [3]	1	
		2 x bit I/O, used for channel selection	33, 34	
	SC4	4 x TPU	TPU_C: 2 … 5	▪ SC-DI 8/1 (DS1642) ▪ SC-DO 8/1 (DS1646) ▪ SC-DO 8/2 (DS1647) ▪ SC-CCDI 6/1 (DS1637) ▪ SC-SENS 4/1 [1] (DS1626)
		4 x bit I/O	1, 2, 35, 36	
	SC5	8 x analog	1 … 8	▪ SC-AI 4/1 (DS1631) ▪ SC-AI 10/1 [4] (DS1633) ▪ SC-SENS 4/1 [1] (DS1626)
	SC6	2 x analog	9, 10	▪ SC-AI 10/1 [4] (DS1633) ▪ SC-SENS 4/1 [1] (DS1626)

[1] The SC-SENS 4/1 module is a sensor supply module and does not have signal connections to the Control Unit's microcontroller channels. Thus, you can insert an SC-SENS 4/1 module in any available slot. You can insert a maximum of 2 SC-SENS 4/1 modules in a unit to avoid exceeding the unit's maximum possible power consumption.

[2] The signals are also routed to the Power Unit (see PS5 on the Power Unit).

[3] Serial Digital Interface for a connection to/from the microcontroller of the Control Unit.

[4] The SC-AI 10/1 has 10 channels and requires two adjacent slots. The first slot has to process 8 channels and the second slot 2 channels. You can mount it on the Control Unit's slots SC5 … SC6, and on the SC Unit's slots SC3 … SC4.

Stack with Control Unit (MPC565), Power Unit, and SC Unit – RoutingID 61376 for PS-DINJ 2/1 Module

Objective

The routing code with the RoutingID 61376 applies the following configuration:

- Engine control use scenario for engines with up to 4 cylinders
- Stack with UCB consisting of:
  - Control Unit with MC-MPC565 1/1 module (layer 1)
  - SC Unit (layer 2)
  - Power Unit (layer 3)
- One or more PS-DINJ 2/1 module

Safety precautions

⚠ WARNING

Hazardous voltages! The PS-DINJ 2/1 module generates output voltages up to 100 V.
Risk of electric shock

- Observe all safety precautions stated before using the PS-DINJ 2/1 module. Refer to Safety Precautions for Using the PS-DINJ 2/1 Module on page 27.

Installing or rearranging an SC-UHEGO 2/1 module (DS1639)

If you want to install or rearrange an SC-UHEGO 2/1 module (DS1639) in a single unit or a stack with UCB, you need a custom-built routing code. Contact dSPACE for an appropriate routing code.

RoutingID 61376 – Control Unit (MPC565) – engine control

The following table shows which SC modules can be installed on which slot of the unit and suit the specifics of the Control Unit's microcontroller channels you need in your application.

Stack with UCB (RoutingID 61376) – Engine Control	Slot	Signal	MPC565 Channel	Possible Module
Control Unit (layer 1) 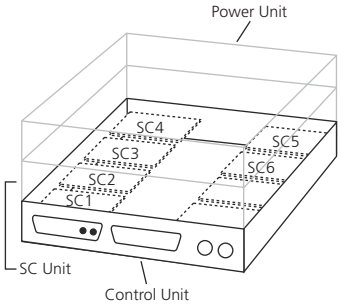	SC1	1 x TPU, used as crankshaft signal	TPU_A: 3	▪ SC-DI 8/1 (DS1642) ▪ SC-CCDI 6/1 (DS1637) ▪ SC-SENS 4/1 [1] (DS1626)
		2 x TPU, used as camshaft signals	TPU_A: 4, 5	
		1 x ADC (TRIG)	1	
		4 x bit I/O	26 … 29	
	SC2	2 x MIOS (PWM), used to monitor the lambda probe heater controls [2]	2, 3	▪ SC-EGOS 2/1 (DS1634) ▪ SC-SENS 4/1 [1] (DS1626)
		2 x bit I/O, used as Ri measurement controls	3, 4	
		4 x analog, used as module outputs	25 … 28	
	SC3	1 x TPU, used for generating the measurement window	TPU_A: 16	▪ SC-KNOCK 4/1 (DS1635) ▪ SC-SENS 4/1 [1] (DS1626)
		1 x SDI [3]	1	
		2 x bit I/O, used for channel selection	33, 34	
	SC4	4 x TPU	TPU_C: 2 … 5	▪ SC-DI 8/1 (DS1642) ▪ SC-DO 8/1 (DS1646) ▪ SC-DO 8/2 (DS1647) ▪ SC-CCDI 6/1 (DS1637) ▪ SC-SENS 4/1 [1] (DS1626)
		4 x bit I/O	1, 2, 35, 36	
	SC5	8 x analog	1 … 8	▪ SC-AI 4/1 (DS1631) ▪ SC-AI 10/1 [4] (DS1633) ▪ SC-SENS 4/1 [1] (DS1626)
	SC6	2 x analog	9, 10	▪ SC-AI 10/1 [4] (DS1633) ▪ SC-SENS 4/1 [1] (DS1626)

[1] The SC-SENS 4/1 module is a sensor supply module and does not have signal connections to the Control Unit's microcontroller channels. Thus, you can insert an SC-SENS 4/1 module in any available slot. You can insert a maximum of 2 SC-SENS 4/1 modules in a unit to avoid exceeding the unit's maximum possible power consumption.

[2] The signals are also routed to the Power Unit (see PS5 on the Power Unit).

[3] Serial Digital Interface for a connection to/from the microcontroller of the Control Unit.

[4] The SC-AI 10/1 has 10 channels and requires two adjacent slots. The first slot has to process 8 channels and the second slot 2 channels. You can mount it on the Control Unit's slots SC5 … SC6, and on the SC Unit's slots SC3 … SC4.

Stack with Control Unit (MPC565), two Power Units, and SC Unit – RoutingID 65422 for PS-DINJ 2/1 Module

Objective

The routing code with the RoutingID 65422 applies the following configuration:

- Engine control use scenario for engines with up to 8 cylinders
- Stack with UCB consisting of:
  - Control Unit with MC-MPC565 1/1 module (layer 1)
  - SC Unit (layer 2)
  - Power Unit 1 (layer 3)
  - Power Unit 2 (layer 4)
- One or more PS-DINJ 2/1 module

Safety precautions

⚠ WARNING

Hazardous voltages! The PS-DINJ 2/1 module generates output voltages up to 100 V.
Risk of electric shock

- Observe all safety precautions stated before using the PS-DINJ 2/1 module. Refer to Safety Precautions for Using the PS-DINJ 2/1 Module on page 27.

Installing or rearranging an SC-UHEGO 2/1 module (DS1639)

If you want to install or rearrange an SC-UHEGO 2/1 module (DS1639) in a single unit or a stack with UCB, you need a custom-built routing code. Contact dSPACE for an appropriate routing code.

RoutingID 65422 – Control Unit (MPC565) – engine control

The following table shows which SC modules can be installed on which slot of the unit and suit the specifics of the Control Unit's microcontroller channels you need in your application.

Stack with UCB (RoutingID 65422) – Engine Control	Slot	Signal	MPC565 Channel	Possible Module
Control Unit (layer 1) 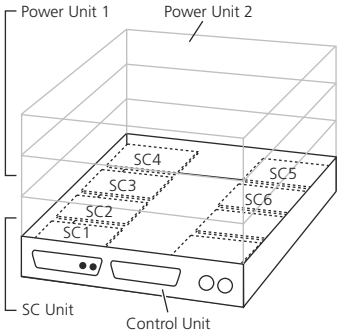 	SC1	1 x TPU, used as crankshaft signal	TPU_A: 3	▪ SC-DI 8/1 (DS1642) ▪ SC-CCDI 6/1 (DS1637) ▪ SC-SENS 4/1 [1] (DS1626)
		2 x TPU, used as camshaft signals	TPU_A: 4, 5	
		1 x ADC (TRIG)	1	
		4 x bit I/O	26 … 29	
	SC2	2 x MIOS (PWM), used to monitor the lambda probe heater controls [2]	2, 3	▪ SC-EGOS 2/1 (DS1634) ▪ SC-SENS 4/1 [1] (DS1626)
		2 x bit I/O, used as Ri measurement controls	3, 4	
		4 x analog, used as module outputs	25 … 28	
	SC3	1 x TPU, used for generating the measurement window	TPU_A: 16	▪ SC-KNOCK 4/1 (DS1635) ▪ SC-SENS 4/1 [1] (DS1626)
		1 x SDI [3]	1	
		2 x bit I/O, used for channel selection	33, 34	
	SC4	4 x TPU	TPU_C: 2 … 5	▪ SC-DI 8/1 (DS1642) ▪ SC-DO 8/1 (DS1646) ▪ SC-DO 8/2 (DS1647) ▪ SC-CCDI 6/1 (DS1637) ▪ SC-SENS 4/1 [1] (DS1626)
		4 x bit I/O	1, 2, 35, 36	
	SC5	8 x analog	1 … 8	▪ SC-AI 4/1 (DS1631) ▪ SC-AI 10/1 [4] (DS1633) ▪ SC-SENS 4/1 [1] (DS1626)
	SC6	2 x analog	9, 10	▪ SC-AI 10/1 [4] (DS1633) ▪ SC-SENS 4/1 [1] (DS1626)

[1] The SC-SENS 4/1 module is a sensor supply module and does not have signal connections to the Control Unit's microcontroller channels. Thus, you can insert an SC-SENS 4/1 module in any available slot. You can insert a maximum of 2 SC-SENS 4/1 modules in a unit to avoid exceeding the unit's maximum possible power consumption.

[2] The signals are also routed to the Power Unit (see PS5 on the Power Unit).

[3] Serial Digital Interface for a connection to/from the microcontroller of the Control Unit.

[4] The SC-AI 10/1 has 10 channels and requires two adjacent slots. The first slot has to process 8 channels and the second slot 2 channels. You can mount it on the Control Unit's slots SC5 … SC6, and on the SC Unit's slots SC3 … SC4.

Stack with Control Unit (MPC565), Two SC Units, and Power Unit – RoutingID 10243 for SC-TC 8/1 Module and PS-DINJ 2/1 Module

Objective

The routing code with the RoutingID 10243 applies the following configuration:

- Engine control use scenario for engines with up to 4 cylinders
- Stack with UCB consisting of:
  - Control Unit with MC-MPC565 1/1 module (layer 1)
  - SC Unit 1 (layer 2)
  - SC Unit 2 (layer 3) with one or more SC-TC 8/1 module
  - Power Unit (layer 4) with one or more PS-DINJ 2/1 module

Note

If you rearrange the modules on the carrier boards contrary to the table below, the routing code stored in the units has to be modified by dSPACE.

Safety precautions

⚠ WARNING

Hazardous voltages! The PS-DINJ 2/1 module generates output voltages up to 100 V.
Risk of electric shock

- Observe all safety precautions stated before using the PS-DINJ 2/1 module. Refer to Safety Precautions for Using the PS-DINJ 2/1 Module on page 27.

Installing or rearranging an SC-UHEGO 2/1 module (DS1639)

If you want to install or rearrange an SC-UHEGO 2/1 module (DS1639) in a single unit or a stack with UCB, you need a custom-built routing code. Contact dSPACE for an appropriate routing code.

RoutingID 10243 – Control Unit (MPC565) – engine control

The following table shows which SC modules can be installed on which slot of the unit and suit the specifics of the Control Unit's microcontroller channels you need in your application.

Stack with UCB (RoutingID 10243) – Engine Control	Slot	Signal	MPC565 Channel	Possible Module
Control Unit (layer 1) 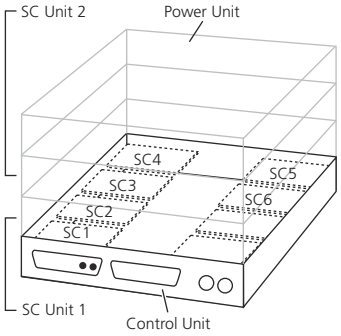 	SC1	1 x TPU, used as crankshaft signal	TPU_A: 3	▪ SC-DI 8/1 (DS1642) ▪ SC-CCDI 6/1 (DS1637) ▪ SC-SENS 4/1 [1] (DS1626)
		2 x TPU, used as camshaft signals	TPU_A: 4, 5	
		1 x ADC (TRIG)	1	
		4 x bit I/O	26 … 29	
	SC2	2 x MIOS (PWM), used to monitor the lambda probe heater controls [2]	2, 3	▪ SC-EGOS 2/1 (DS1634) ▪ SC-SENS 4/1 [1] (DS1626)
		2 x bit I/O, used as Ri measurement controls	3, 4	
		4 x analog, used as module outputs	25 … 28	
	SC3	1 x TPU, used for generating the measurement window	TPU_A: 16	▪ SC-KNOCK 4/1 (DS1635) ▪ SC-SENS 4/1 [1] (DS1626)
		1 x SDI [3]	1	
		2 x bit I/O, used for channel selection	33, 34	
	SC4	4 x TPU	TPU_C: 2 … 5	▪ SC-DI 8/1 (DS1642) ▪ SC-DO 8/1 (DS1646) ▪ SC-DO 8/2 (DS1647) ▪ SC-CCDI 6/1 (DS1637) ▪ SC-SENS 4/1 [1] (DS1626)
		4 x bit I/O	1, 2, 35, 36	
	SC5	8 x analog	1 … 8	▪ SC-AI 4/1 (DS1631) ▪ SC-AI 10/1 [4] (DS1633) ▪ SC-SENS 4/1 [1] (DS1626)
	SC6	2 x analog	9, 10	▪ SC-AI 10/1 [4] (DS1633) ▪ SC-SENS 4/1 [1] (DS1626)

[1] The SC-SENS 4/1 module is a sensor supply module and does not have signal connections to the Control Unit's microcontroller channels. Thus, you can insert an SC-SENS 4/1 module in any available slot. You can insert a maximum of 2 SC-SENS 4/1 modules in a unit to avoid exceeding the unit's maximum possible power consumption.

[2] The signals are also routed to the Power Unit (see PS5 on the Power Unit).

[3] Serial Digital Interface for a connection to/from the microcontroller of the Control Unit.

[4] The SC-AI 10/1 has 10 channels and requires two adjacent slots. The first slot has to process 8 channels and the second slot 2 channels. You can mount it on the Control Unit's slots SC5 … SC6.

Connectors and Pinouts

Objective

All external connectors of the Control Unit are located on the front panel. They provide access to the I/O signals of the unit.

Front Panel Connectors

Objective

The front panel provides the I/O connectors and communication connectors.

Connector labels

The labels of the I/O connectors on a front panel always begin with an 'F'. The communication connectors are labeled 'COM' and 'Host PC'. The labels are printed near the connectors at the front of the panel.

Where to go from here

Information in this section

Pinout information and signal specifications of the front panel connectors will help you to build the cable harness.

F1 Connector 157
F2 Connector 160
COM Connector 161
Host PC Connector 162

F1 Connector

Purpose

The F1 connector is used to obtain access to the power supply and the signals from/to the SC module inserted in SC slot 1, and the signals from/to the bus transceiver modules.

Pinout

The F1 connector of the Control Unit is a male Sub-D connector with 41 signal and two high-current pins. The pin numbering used for Sub-D connectors is not standardized. The following illustration shows the numbering used (front view).

Note

Do not rely on the numbers written on Sub-D connectors.

F1 Connector	Pin	Signal	Pin	Signal	Pin	Signal
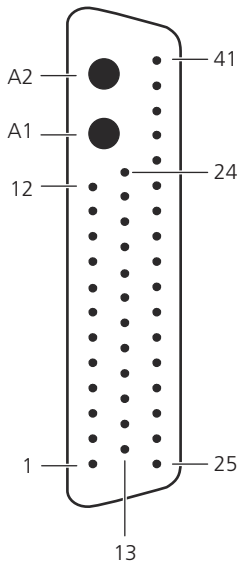					41	S1_IO9 [1]
	A2	GND			40	S1_IO8
					39	S1_IO7
	A1	UBAT			38	S1_IO6
			24	KL15_PU	37	S1_IO5
	12	KL15	23	Reserved	36	S1_IO4
	11	Reserved	22	Reserved	35	S1_IO3
	10	Reserved	21	Reserved	34	S1_IO2
	9	Reserved	20	Reserved	33	S1_IO1
	8	Reserved	19	Reserved	32	Reserved
	7	Reserved	18	Reserved	31	Reserved
	6	Reserved	17	Reserved	30	Reserved
	5	Reserved	16	Reserved	29	Reserved
	4	Reserved	15	Reserved	28	Reserved
	3	Reserved	14	Reserved	27	Reserved
	2	Reserved	13	Reserved	26	Reserved
	1	Reserved			25	Reserved

[1] The mapping between a single I/O signal of a module and a pin on the front I/O connector depends on the types of the installed modules and the carrier board slots that they are inserted in. You can get the necessary pinout information by exporting it to a file via ConfigurationDesk for RapidPro. You can read this file via Microsoft™ Excel.

Signal specification

Signal	Description	Specification [1]	
S1_IOx [2]	Analog or digital input/output signal, depends on the SC	Input/output voltage range	Depends on SC module
		Max. input/output current	
		Overvoltage protection	

Signal	Description	Specification [1]	
	module inserted in SC slot 1 on the carrier board		
UBAT	External power supply input (for example, from car battery) **Note** In a stack the UBAT and GND pins are internally connected to the UCB connectors to power the other units.	Input voltage range	+6 V … +54 V DC [3]
		Power consumption	Without modules: ▪ Approx. 4 W With modules: ▪ Approx. 10 W (depends on the SC modules used)
		Standby current (KL15 off)	< 10 mA (typ. 8 mA)
		Overvoltage protection	Up to ±100 V
GND	Power supply ground line	–	
KL15	Remote control input for switching on the Control Unit with a remote switch, KL15 for example (output of ignition/driving switch)	Power-on voltage Power-off voltage	> 4 V < 3 V
		Overvoltage protection	Up to ±100 V
KL15_PU	Power supply output (internally connected to UBAT input via pull-up resistor). The Control Unit operates continuously if KL15_PU is connected directly to the remote control input (KL15).	Output voltage range	–

[1] Unless stated otherwise, the specifications are valid only if the dSPACE hardware is correctly powered, switched on, and ready for operation.
[2] S1 refers to the SC slot 1 on the carrier board, IOx refers to the I/O pin of the slot and is in the range IO1 … IO9.
[3] With an additional absolute maximum tolerance of +6 V.

⚠ WARNING

Hazardous voltages
Risk of electric shock and/or damage to the hardware

- Do not connect any high-voltage devices to the I/O connectors of the hardware.
- Do not apply any voltages/currents outside the specified ranges to the connector pins.

Matching connectors

Matching connectors come with the hardware package. If you require additional connectors, you can order them from dSPACE. For details, refer to Hardware Accessories (RapidPro System Hardware Installation Guide 🕮).

F2 Connector

Purpose

The F2 connector is used to obtain access to the signals from/to the SC modules inserted in the SC slots 2 … 6, and the sensor power supplies.

Pinout

The F2 connector of the Control Unit is a 50-pin, male Sub-D connector. The pin numbering used for Sub-D connectors is not standardized. The following illustration shows the numbering used (front view).

Note

Do not rely on the numbers written on Sub-D connectors.

F2 Connector	Pin	Signal	Pin	Signal	Pin	Signal
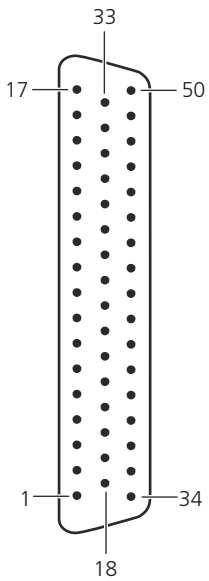	17	S6_IO9 [1]			50	S6_IO7
	16	S6_IO6	33	S6_IO8	49	S6_IO4
	15	S6_IO3	32	S6_IO5	48	S6_IO1
	14	S5_IO9	31	S6_IO2	47	S5_IO7
	13	S5_IO6	30	S5_IO8	46	S5_IO4
	12	S5_IO3	29	S5_IO5	45	S5_IO1
	11	S4_IO9	28	S5_IO2	44	S4_IO7
	10	S4_IO6	27	S4_IO8	43	S4_IO4
	9	S4_IO3	26	S4_IO5	42	S4_IO1
	8	S3_IO9	25	S4_IO2	41	S3_IO7
	7	S3_IO6	24	S3_IO8	40	S3_IO4
	6	S3_IO3	23	S3_IO5	39	S3_IO1
	5	S2_IO9	22	S3_IO2	38	S2_IO7
	4	S2_IO6	21	S2_IO8	37	S2_IO4
	3	S2_IO3	20	S2_IO5	36	S2_IO1
	2	USENS_5V_GND	19	S2_IO2	35	USENS_12V_GND
	1	USENS_5V [2]	18	–	34	USENS_12V [2]

[1] The mapping between a single I/O signal of a module and a pin on the front I/O connector depends on the types of the installed modules and the carrier board slots that they are inserted in. You can get the necessary pinout information by exporting it to a file via ConfigurationDesk for RapidPro. You can read this file via Microsoft™ Excel.

[2] The sensor supply voltages are switched on if the RapidPro system executes an application.

Signal specification

Signal	Description	Specification [1]	
Sx_IOx [2]	Analog or digital input/output signal, depends on the SC module installed on the carrier board	Input/output voltage range	Depends on SC module
		Max. input/output current	
		Overvoltage protection	
USENS_5V [3]	5 V sensor supply	Output voltage	5 V/2 W
USENS_5V_GND	Ground of the 5 V sensor supply	–	
USENS_12V [3]	12 V sensor supply	Output voltage	12 V/2 W
USENS_12V_GND	Ground of the 12 V sensor supply	–	

[1] Unless stated otherwise, the specifications are valid only if the dSPACE hardware is correctly powered, switched on, and ready for operation.
[2] Sx refers to the slot number on the carrier board and is in the range S2 … S6, IOx refers to the I/O pin of the slot and is in the range IO1 … IO9.
[3] The sensor supply voltages are switched on if the RapidPro system executes an application.

⚠ WARNING

Hazardous voltages
Risk of electric shock and/or damage to the hardware

- Do not connect any high-voltage devices to the I/O connectors of the hardware.
- Do not apply any voltages/currents outside the specified ranges to the connector pins.

Matching connectors

Matching connectors come with the hardware package. If you require additional connectors, you can order them from dSPACE. For details, refer to Hardware Accessories (RapidPro System Hardware Installation Guide 🕮).

COM Connector

Purpose

The COM connector is used to obtain access to the signals from/to the COM-LVDS 1/1 module (DS1606), that is inserted in the COM slot 1 if the Control Unit is used as an I/O subsystem.

Pinout and signal description

The COM connector is a 4-pin, circular connector. It is color-coded (brown) and has keyways to avoid false connecting. The following table shows the pin assignment (front view).

COM Connector	Pin	Signal	Description
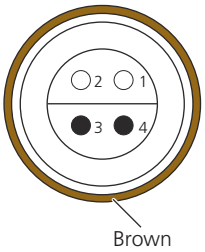	1	RX–	LVDS [1] receive negative
	2	RX+	LVDS receive positive
	3	TX+	LVDS transmit positive
	4	TX–	LVDS transmit negative

[1] Low voltage differential signaling

Matching cable

You can order a matching LVDS connection cable from dSPACE. For details, refer to Hardware Accessories (RapidPro System Hardware Installation Guide 🕮).

Host PC Connector

Purpose

The host PC connector is used to obtain access to the signals from/to the COM module, that is inserted in the COM slot 2 of the Control Unit.

Pinout and signal description

The host PC connector is a 4-pin, female circular connector. The following table shows the pin assignment (front view):

Host PC Connector	COM Module	Pin	Signal	Description
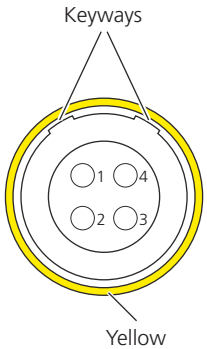	COM-USB CI 1/1 (DS1609)	1	VBUS	USB power
		2	D+	USB data – noninverted signal of differential data pair
		3	D–	USB data – inverted signal of differential data pair
		4	GND	USB ground

Matching cable

You can order a matching PC connection cable from dSPACE. For details, refer to Hardware Accessories (RapidPro System Hardware Installation Guide 🕮).

Unit in Use

Objective

During operation, the Control Unit indicates its status by status LEDs and temperature sensors.

Where to go from here

Information in this section

Status LEDs..... 163

Temperature Sensors..... 166

Status LEDs

Purpose of the status LEDs

The RapidPro Control Unit is equipped with eight status LEDs on the front panel:

- Four status LEDs indicate faults at the inputs/outputs, damage to the hardware or bad power supply.
- The COM connector and the host PC connector have two connection status LEDs each to indicate the status of the communication connections.

Location of the LEDs

The status LEDs 1 … 4 and the connection status LEDs are located on the front panel of each unit as shown in the illustration below.

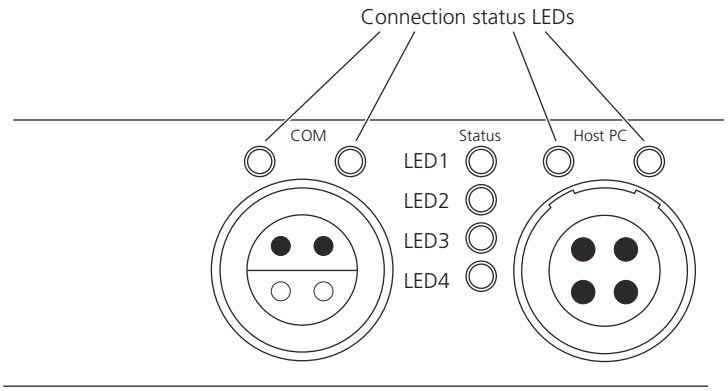

Connection status LEDs

The meanings of the connection status LEDs are as follows:

- Left LED above a connector:

  Lit *green* if the connection is established and the interface is ready for communication.

- Right LED above a connector:
  Flashes *green* if data is being sent or received.

Status LEDs 1 … 4

The display principles of the LEDs 1 … 4 are as follows:

- LED 1 shows the status of the external power supply.
- LED 2 … LED 4 show failures of the RapidPro system or application faults at the devices connected to the RapidPro system.
- LEDs lit *green* show correct behavior.
- LEDs lit *orange* or *red* show incorrect behavior.

The following table shows the faults indicated by the LEDs and the measures for solving the problems.

LED	Display	Description	Remedy
LED 1	Green	The power supply is working correctly.	–
	Orange	Single unit: The external supply voltage is connected but there is no enable signal on the KL15 pin.	Connect KL15 to the external supply voltage or to KL15_PU.
		Stack with UCB: ▪ The external supply voltage is connected but there is no enable signal on the Control Unit's KL15 pin. ▪ The Control Unit has disabled the power supplies of all other stack units.	▪ Connect Control Unit's KL15 to the external supply voltage or to KL15_PU. ▪ –
	Red	The external supply voltage is outside the permitted voltage range.	Apply an external supply voltage to the Control Unit of: +6 V … +54 V DC [1)]
	None	No power is supplied to the unit.	
LED 2	Green	No failure condition detected at the devices connected to the RapidPro hardware.	–
	Orange	A failure condition is detected, for example, overload, no load, overtemperature or short circuit.	▪ Disconnect and reconnect the link between the RapidPro

LED	Display	Description	Remedy
			unit and the connected devices. ▪ Check all signals. The signal levels must be in the specified range. ▪ Reset all diagnostics via ConfigurationDesk for RapidPro.
	Red	Internal memory write or erase failures. The carrier board is operating in shutdown mode. This means module functions are disabled.	–
	None	A failure is indicated by another LED (LED 3 or LED 4 are red).	–
		No power is supplied to the unit.	
LED 3	Green	The routing information of the RapidPro hardware is valid.	–
	Orange	Lights up for approx. 1 minute if you changed or removed modules. If the LED is permanently on, the routing code of the RapidPro hardware is invalid.	▪ Restore the positions of the modules on the carrier board(s) to match the routing code. ▪ Or contact dSPACE to obtain a suitable routing code.
	Red	The communication between the microcontroller of the MC module and the carrier board of the unit is faulty.	–
		A monitoring failure is detected on the Control Unit (LED 3 and LED 4 are red).	
	None	A failure is indicated by another LED (LED 2 or LED 4 are red).	–
		No power is supplied to the unit.	
LED 4	Green	All internal supply voltages are in the correct voltage range.	–
	Orange	One of the internal supply voltages is not in the correct range. The carrier board is operating in shutdown mode. This means module functions are disabled.	▪ Remove the modules from the carrier board to localize the error. ▪ If the error is displayed again after restart, the carrier board is defect. Otherwise a module is defect. ▪ Reset all diagnostics via ConfigurationDesk for RapidPro.

LED	Display	Description	Remedy
	Red	The communication between the carrier board and the modules is faulty.	–
		A monitoring failure is detected on the Control Unit (LED 3 and LED 4 are red).	
	None	A failure is indicated by another LED (LED 2 or LED 3 are red).	–
		No power is supplied to the unit.	

[1] With an additional absolute maximum tolerance of +6 V.

Temperature Sensors

Objective

The carrier board of the Control Unit provides six temperature sensors to observe the temperature on the unit's carrier board at several critical locations.

Sensor locations

Top view

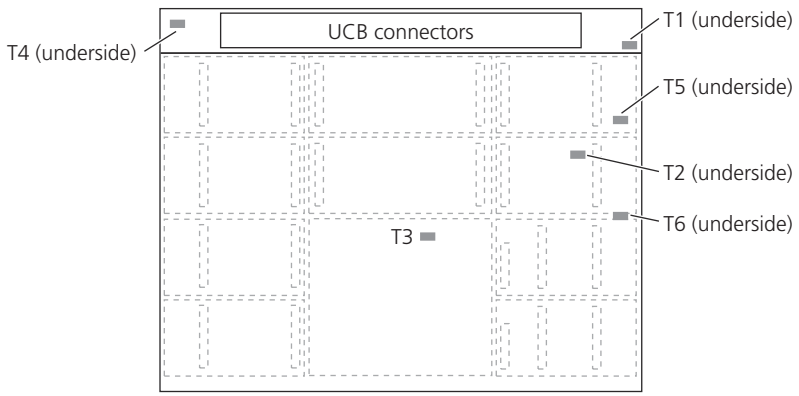

Sensor functions and permitted values

The following table provides details on the sensor function and the permitted values:

Sensor	Function	Permitted Temperature Range
T1	Monitors the housing temperature on the right side near the UCB connectors.	–40 … +105 °C (–40 … +221 °F)
T2	Monitors the temperature near the on-board microcontroller that controls the analog and digital routers.	

Sensor	Function	Permitted Temperature Range
T3	Monitors the temperature below the microcontroller module on the topside of the carrier board.	–40 … +115 °C (–40 … +239 °F)
T4	Monitors the housing temperature on the left side near the UCB connectors.	–40 … +105 °C (–40 … +221 °F)
T5	Monitors the temperature near the 5 V sensor supply.	
T6	Monitors the temperature near the 12 V sensor supply.	

ConfigurationDesk for RapidPro displays the values measured by the temperature sensors. This information can be helpful for error detection. Out-of-range temperatures do not trigger error or diagnostic messages.

Data Sheet

RapidPro Control Unit Data Sheet

Technical data

Parameter		Specification [1)]
General		Compact unit with: ▪ Microcontroller module based on MPC565 ▪ 6 slots for signal conditioning modules (SC modules) ▪ 2 slots for communication modules (COM modules) (USB host interface, LVDS slave interface) ▪ Unit connection bus (UCB) to expand RapidPro Control Unit with RapidPro SC and/or Power Units
Microcontroller module	MC-MPC565 1/1	▪ Based on MPC565, 56 MHz, 4 MB external SRAM, 16 MB external flash memory, 1 MB internal flash memory
Signal conditioning		▪ Up to 6 SC modules ▪ Up to 8 channels per SC slot ▪ Mixed channel configurations (analog/digital) possible ▪ Support of modules with different form factors (single-slot size and double-slot size)
Software configuration		▪ Configuration of the Control Unit and the SC modules from a host PC via ConfigurationDesk for RapidPro ▪ Displaying module version information, measurement values, module parameters (voltage range, offset, gain etc.) and getting I/O pinout information
Diagnostics		▪ Indication of different states: for example, no load, overload, undervoltage, overtemperature, short circuit
Measurement		▪ Constant measurement of values and states on each channel ▪ Displaying results with configuration software ▪ Temperature monitoring at different locations on the carrier board
Modes and functions		▪ Operating mode ▪ Power save mode with wake up function (via KL15 pin) ▪ Remote-controlled operation (external power on/off via remote input) ▪ Powered-off function: The unit is switched off, if the supply voltage drops under a defined voltage level.

Parameter		Specification [1]
Electrical characteristics	Remote-controlled operation	▪ Power on voltage: > 4 V ▪ Power off voltage: < 3 V
	Power-up state	Defined "powered-off" state during initialization and booting
	I/O protection	Overvoltage protection for the SC module pins at the front I/O connector depends on the SC modules
	Sensor power supply	+5 V DC, 2 W, galvanically isolated
		+12 V DC, 2 W, galvanically isolated
	Power supply	▪ +6 V … +54 V DC [2] ▪ Load dump protection up to +100 V ▪ Reverse voltage protection up to –100 V
	Standby current (KL15 off)	< 10 mA (typ. 8 mA)
	Power consumption [3] (without modules)	Approx. 4 W
	Power consumption [3] (with modules)	Approx. 10 W (depends on the SC modules used)
Internal battery characteristics	Manufacturer	Tadiran Batteries GmbH
	Type	SL-550
	Lithium content	350 mg
	UN test	Passed
	Nominal capacity	900 mAh
Mechanical characteristics	Chassis	▪ Aluminum box with cooling fins ▪ Passive cooling, no fan ▪ Easy insertion of modules ▪ Anti-vibration system locks the modules against accidental disconnection ▪ Housing setup allows flexible assembling (stack mount, single unit mount)
	Connectors	▪ Front panel with: – I/O connectors for connection to external devices (sensors, actuators) – Host PC connector for communication with the host PC (USB1.1 and USB 2.0 compatible) – COM connector for connection to a dSPACE RCP system (only if unit used as I/O subsystem)
	Status LEDs	▪ 8 LEDs displaying states and errors

Parameter		Specification [1]	
		▪ Integrated into the front panel	
	Physical size (with cover and base plate)	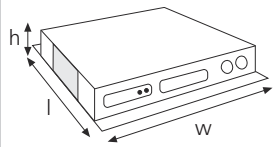	▪ l: 208 mm (8.19 in.) ▪ w: 225 mm (8.86 in.) ▪ h: 36 mm (1.42 in.)
	Physical size (without cover and base plate)	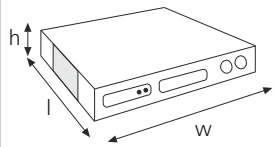	▪ l: 172.5 mm (6.79 in.) ▪ w: 225 mm (8.86 in.) ▪ h: 26 mm (1.02 in.)
	Weight	▪ Approx. 1.5 kg (3.2 lb.) with cover and base plate ▪ Approx. 1.0 kg (2.2 lb.) without cover and base plate	
Environmental conditions	Operating temperature	–40 … +85 °C (–40 … +185 °F) [4]	
	Storage temperature	–65 … +125 °C (–85 … +257 °F)	
	Humidity	0 … 95%, noncondensing	
	Shock	ISO 16750-3:2007 / 4.2.2.	Test conditions: ▪ Linear shock (1/2 sine pulse), 6-axis ▪ 500 m/s^2, 6 ms, 10 pulses per axis ▪ Operating
	Vibration	ISO 16750-3:2007 / 4.1.2.4 Test IV	Test conditions: Broad band noise, 2h per axis, RMS-acceleration 27,8 m/s^2
		EN 60068-2-6	Test conditions: ▪ Swept sine, 1 octave per minute, 3-axis test ▪ 5 ... 2000 Hz, up to 5 g, 2 sweeps per axis ▪ Operating
EMC standards		EN 61326-1 Table 2	Immunity standard for industrial environments [5]
		CISPR 11, EN 55011 Group 1, Class A	Emission standard for industrial environments
CE compliance		2014/30/EU (Electromagnetic Compatibility Directive)	

[1] Unless stated otherwise, the specifications are valid only if the dSPACE hardware is correctly powered, switched on, and ready for operation.
[2] With an additional absolute maximum tolerance of +6 V.
[3] Typical value at T_Housing = +25 °C (+77 °F).
[4] The total output capacity of the RapidPro system depends on the modules used and the assembly (single unit or stack). It is limited by the thermal capacity of the housing. As long as the maximum housing temperature T_Housing = +95 °C (+203 °F) is not exceeded, the function of the RapidPro system is guaranteed.
[5] Tested with an I/O cable length < 3 m. Connected cables might affect the specified characteristics due to physical effects such as crosstalk, voltage drops, and influences through electromagnetic fields.

SC-AI 4/1 Module

Short description

The SC-AI 4/1 module (DS1631) is an analog input module with four differential input channels.

Where to go from here

Information in this section

Module Overview..... 172
Information on the module's features, components, and functionality will help you assess its possible uses.

Software Configuration..... 174
The SC-AI 4/1 module provides parameters which are software-configurable via ConfigurationDesk for RapidPro.

Hardware Configuration..... 176
The SC-AI 4/1 module provides user-configurable circuits to add electronic components (resistors, capacitors) to the input circuit of the module.

Module in Use..... 180
You have access to information (i.e., output voltages, temperatures on the circuit board) which the module provides during operation.

Data Sheet..... 181
The data sheet summarizes the technical data of the SC-AI 4/1 module; there is also a template that you can use as a master to document your configuration settings.

Module Overview

Where to go from here

Information in this section

Module Features..... 172
Module Components and Functionality..... 172

Module Features

Main features

The main features of the SC-AI 4/1 module are:

- Analog input module with four differential input channels
- Input voltage range: ±0.1 V and ±50 V (software-configurable in steps)
- Input circuit is hardware-configurable
- Four software-selectable 1st order low-pass filter (per channel)
  Cutoff frequencies:
  - 10 Hz
  - 50 Hz
  - 100 Hz
  - 1 kHz
- Output voltage setting: 0 … +5 V, 0 … +10 V, –5 V … +5 V, -10 V … +10 V (software-configurable globally for all channels)

Software

ConfigurationDesk 1.0 (on dSPACE Release 4.2) or later is required to work with the SC-AI 4/1 module.

More features

For a complete list of the module's features, refer to SC-AI 4/1 Data Sheet on page 181.

Module Components and Functionality

Objective

The module's components are shown on the basis of its simplified I/O circuit. More detailed descriptions of the components are given if their functions are not clear from the I/O circuit.

I/O circuit

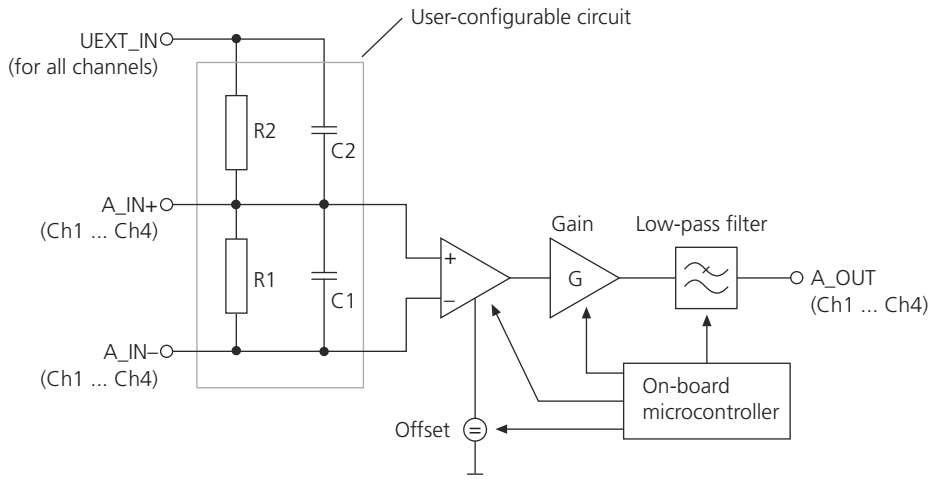

Note

To avoid measuring errors connect a constant signal (recommended: GND) to the A_IN– pin of each channel.

User-configurable circuit

Additional components (resistors, capacitors) can be soldered to each input to adapt it to different sensor types. For example, you can emulate typical ECU input characteristics with adding pull-up or pull-down configurations.

For further information on the user-configurable circuit, refer to Hardware Configuration on page 176.

Related topics

References

Overview of User-Configurable Circuit..... 176

Software Configuration

Configuration via ConfigurationDesk for RapidPro

Objective

Various parameters of the module are configurable via ConfigurationDesk for RapidPro. In addition, the software provides module-specific edit fields to document the values of the soldered components of the user-configurable circuit. This hardware information is stored on the module.

Software-configurable parameters

Parameter	Range/Setting	Factory Default Setting	Description	Valid
Input voltage range	▪ ±0.1 V ▪ ±0.2 V ▪ ±0.5 V ▪ ±1 V ▪ ±2 V ▪ ±5 V ▪ ±10 V ▪ ±20 V ▪ ±50 V	±5 V	–	Per channel
Low-pass filter frequency	▪ 10 Hz ▪ 50 Hz ▪ 100 Hz ▪ 1000 Hz	100 Hz	–3 dB cutoff frequency of the 1st order low-pass filter	
Output voltage range	▪ 0 … +5 V ▪ ± 5 V ▪ 0 … +10 V [1)] ▪ ± 10 V [1)]	0 … +5 V	*Installed in an SC Unit that is used as single unit:* The output voltage configuration allows you to adapt the analog outputs to different types of dSPACE I/O boards. The output voltage is available on the rear I/O connectors of a single unit.	Global for all channels
Input voltage	▪ Unipolar ▪ Bipolar	Bipolar	*Installed in a Control Unit or SC Unit in a stack with UCB* ▪ Unipolar: Use this setting, if you want to connect only positive voltages	

Parameter	Range/Setting	Factory Default Setting	Description	Valid
			(+0.1 V … +50 V) to the inputs of the module ▪ Bipolar: Use this setting, if you want to connect positive *and* negative voltages (±0.1 V … ±50 V) to the inputs of the module.	

[1] This setting doubles the gain if the module is installed in a Control Unit or SC Unit in a stack with unit connection bus (UCB).

Hardware information

You can enter information about the user-configurable circuit on the module-specific properties dialog. The information is stored on the module as reminder and does not affect the channel's behavior.

The following table shows the relation between the parameter names used in ConfigurationDesk for RapidPro and the names of the components used in the user-configurable circuit:

Parameter in ConfigurationDesk for RapidPro	Component in the Input Circuit	Description	Valid
R pull-up	R2	–	Per channel
R pull-down	R1		
C block-up	C2	Blocking capacitor	
C block-down	C1		

If the components were soldered by dSPACE according to your order, the specific values are already stored.

For a detailed circuit illustration, refer to Overview of User-Configurable Circuit on page 176.

Related topics

Examples

Configuration Example: Determining the Internal Resistance of a Temperature Sensor 178

References

Overview of User-Configurable Circuit..... 176
SC-AI 4/1 Configuration Template..... 183
Solder Pads and Component Requirements..... 177

Hardware Configuration

Objective

Additional electronic components can be added to the input of each channel to adapt it to different sensor types. The module provides solder pads where you can solder components like resistors, or capacitors in user-configurable circuits.

Where to go from here

Information in this section

Overview of User-Configurable Circuit..... 176

Solder Pads and Component Requirements..... 177

Configuration Example: Determining the Internal Resistance of a Temperature Sensor..... 178

Overview of User-Configurable Circuit

Objective

Each channel of the module provides a user-configurable circuit which can be used to adapt the channel input to different sensor types.

Components of the user-configurable circuit

The following illustration shows the circuit of the SC-AI 4/1 module. Up to four components can be soldered on to configure the input circuit.

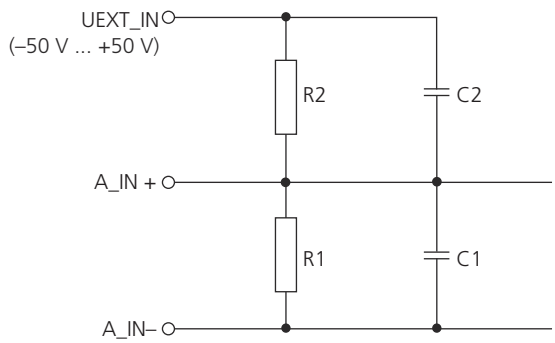

Factory default settings

The settings depend on your order as follows:

- If you did not specify components in your order, the user-configurable circuit of each channel is equipped with:
  - R1 = 1 MΩ
  - C1 = 1 nF

- If you specified components in your order, these were soldered by dSPACE.

Note

If R2 or C2 are soldered, you must connect an external voltage (i.e., +5 V or UBAT) to UEXT_IN to avoid crosstalk.

Hardware information in ConfigurationDesk for RapidPro

ConfigurationDesk for RapidPro provides a module-specific properties dialog where you can edit the values of the soldered components as reminders for each channel on the module.

For the relevant parameters, refer to Hardware information on page 175.

Related topics

Basics

Changing the Hardware Configuration of SC/PS Modules (RapidPro System Hardware Installation Guide 🕮)
Changing the Installation of SC/PS/COM Modules (RapidPro System Hardware Installation Guide 🕮)

References

Configuration via ConfigurationDesk for RapidPro..... 174
Module Components and Functionality..... 172
SC-AI 4/1 Configuration Template..... 183

Solder Pads and Component Requirements

Objective

The SC-AI 4/1 module provides solder pads to add components on the module's circuit board.

Positions of solder pads

The following illustration shows the topside of the SC-AI 4/1 module, containing the positions of the solder pads for the user-configurable circuit. The signals available at the different pads are also indicated.

Top view

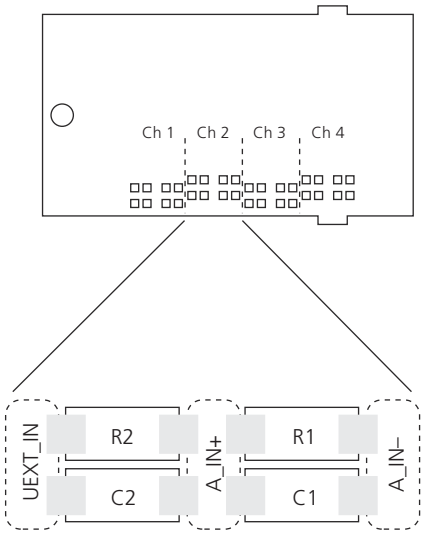

Component requirements

The circuit board is designed for soldering standard 0805 size SMDs (surface mounted devices).

Related topics

Basics

Changing the Hardware Configuration of SC/PS Modules (RapidPro System Hardware Installation Guide 🕮)
Changing the Installation of SC/PS/COM Modules (RapidPro System Hardware Installation Guide 🕮)

References

Configuration via ConfigurationDesk for RapidPro..... 174
SC-AI 4/1 Configuration Template..... 183

Configuration Example: Determining the Internal Resistance of a Temperature Sensor

Objective

You can configure the user-configurable circuit to determine the internal resistance of a connected temperature sensor.

Assignment of the components

The following illustration shows the involved components and their assignment:

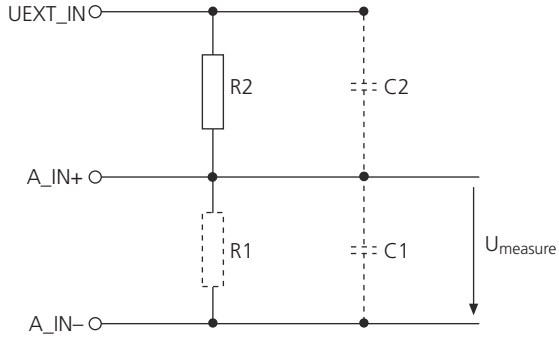

Calculating R_{in}

The sensors internal resistance R_{in} can be calculated using the following formula:

$$R_{in} = R2 \times \frac{1}{\left(\frac{UEXT_IN}{Umeasure} - 1\right)}$$

Related topics

Basics

Changing the Hardware Configuration of SC/PS Modules (RapidPro System Hardware Installation Guide 🕮)
Changing the Installation of SC/PS/COM Modules (RapidPro System Hardware Installation Guide 🕮)

References

Configuration via ConfigurationDesk for RapidPro..... 174
SC-AI 4/1 Configuration Template..... 183

Module in Use

Objective

During operation you can access status information of the SC-AI 4/1 module via ConfigurationDesk for RapidPro, such as permanent monitoring of various measurement values.

Monitoring

Monitored parameters

The SC-AI 4/1 provides monitoring of the following parameters:

Parameter	Description	Valid
Signal Monitoring	The current voltage of each channel is displayed at a typical scan rate of approx. 200 ms. Thus, you can measure only DC signals correctly. The following illustration shows the measuring position. 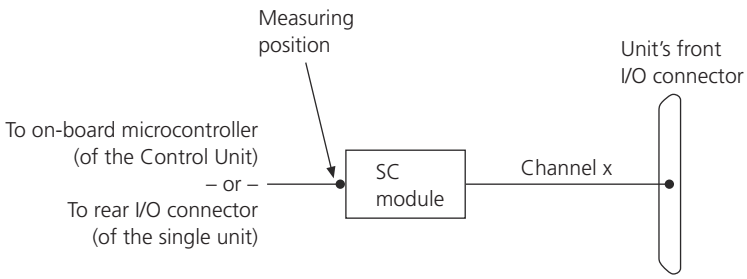	Per channel
Temperature sensor T1 … T4	The temperatures are measured on the module's circuit board at some critical points. They serve for troubleshooting purposes.	For the module

Data Sheet

Where to go from here

Information in this section

SC-AI 4/1 Data Sheet 181
This gives you a complete overview of the module's technical data.

SC-AI 4/1 Configuration Template 183
You can copy and/or print out the template and use it as a master to document your configuration settings.

SC-AI 4/1 Data Sheet

Technical data

Parameter		**Specification** [1]
Identification		Top view 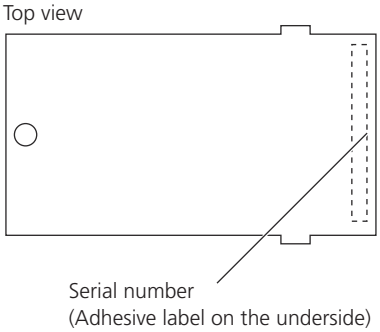
Channels		4 differential analog inputs
Software		ConfigurationDesk 1.0 (on dSPACE Release 4.2) or later is required
Diagnostics		Not available
Input voltage range		▪ ±100 mV … ±50 V ▪ Software-configurable per channel in steps
Output voltage range		▪ 0 … +5 V, 0 … +10 V, –5 V … +5 V, –10 V … +10 V ▪ Software-configurable globally for all channels
Filter	Type	1st order low-pass filter
	–3 dB cutoff frequency	▪ 10 Hz, 50 Hz, 100 Hz, 1 kHz ▪ Software-selectable per channel
	Accuracy of cutoff frequency [2]	±10%

Parameter		Specification [1]
Input impedance		Depends on the interdependence between the input and output voltage, refer to Input impedance on page 182.
Input circuit		Additional components (resistors, capacitors) can be soldered to each channel to adapt the input circuit to different sensor types.
Channel crosstalk		Typ. 80 dB (at 100 Hz signal frequency)
Offset	Offset error [2]	±5 mV
	Offset drift [2]	±100 µV/K
Gain	Gain error [2]	▪ ±1% (gain ≤ 30) ▪ ±2% (gain > 30)
	Gain drift [2]	±30 ppm of FSR/K
DC common-mode rejection		Typ. 60 dB (gain = 1)
Absolute accuracy [2]		Typ. ±1%
Overvoltage protection		Up to ±70 V continuous (unit powered on or off)
Physical size (length x width)		▪ 60 x 31.5 mm (2.36 x 1.24 in.) ▪ Requires one slot

[1] Unless stated otherwise, the specifications are valid only if the dSPACE hardware is correctly powered, switched on, and ready for operation.
[2] Typical value at T_Housing = +25 °C (+77 °F)

Input impedance

The current input impedance of the SC-AI 4/1 results from the input and output voltage as shown in the table below:

Input Voltage	Output Voltage	Input Impedance Constellation
± 5 V … ± 50 V	▪ ± 5 V ▪ 0 … +10 V ▪ ± 10 V	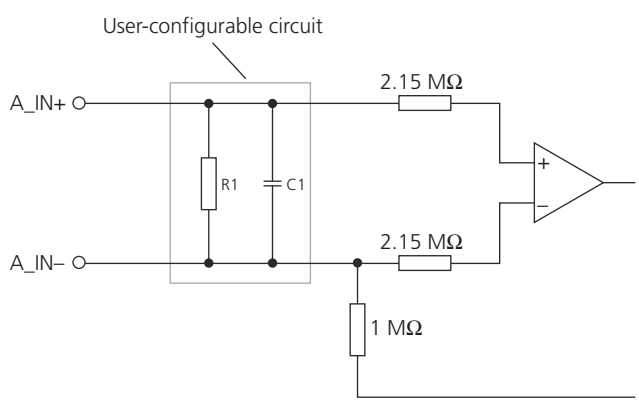 Max. common-mode voltage: ±35 V (A_IN–)
± 2.5 V … ± 50 V	0 … +5 V	

Input Voltage	Output Voltage	Input Impedance Constellation
< ± 5 V	▪ ± 5 V ▪ 0 … +10 V ▪ ± 10 V	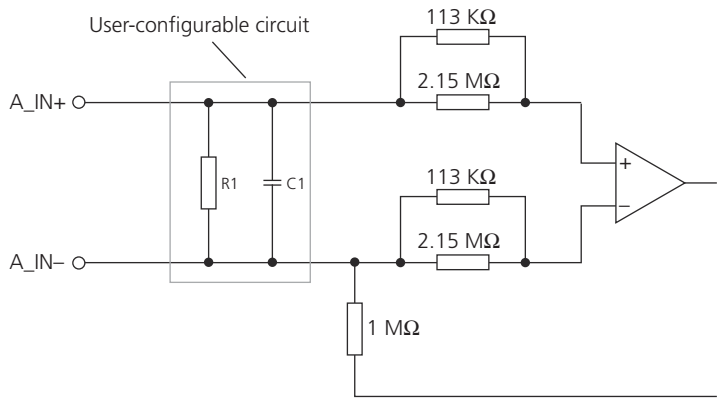 Max. common-mode voltage: ±4 V (A_IN–)
< ± 2.5 V	0 … +5 V	

Note

The values above are valid only if the user-configurable circuit is equipped with R1 = 1 MΩ and C1 = 1 nF (R2 and C2 are not soldered).

SC-AI 4/1 Configuration Template

Objective

You can use the following template to document the settings of your module.

Identification and location

Enter the following parameters to identify and locate the module unambiguously.

Parameter		Specification	Label Location
Identification	dSPACE number	1631	Top view 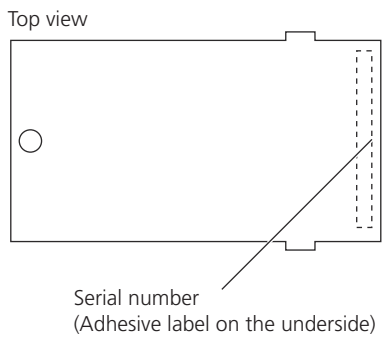
	Serial number		
	Module variant		
Place of installation	System name (unit/stack name)		
	Layer number(s) (unit position in a stack)		
	Slot number		

Parameter		Specification	Label Location
	(slot on the unit's carrier board)		

Software configuration

Enter the settings for each channel in the table below:

Parameter	CH1	CH2	CH3	CH4
Channel name				
Output voltage range [1] – Input voltage [2]				
Input voltage range				
Low-pass filter frequency				

[1] Available only, if the module is installed in an SC Unit used as single unit.
[2] Available only, if the module is installed in a Control Unit or SC Unit in a stack with UCB.

User-configurable circuit

Enter the settings for each channel in the table below:

Parameter		CH1	CH2	CH3	CH4
Channel name					
UEXT_IN					
R1	R pull-down				
R2	R pull-up				
C1	C block-down				
C2	C block-up				
Input circuit					

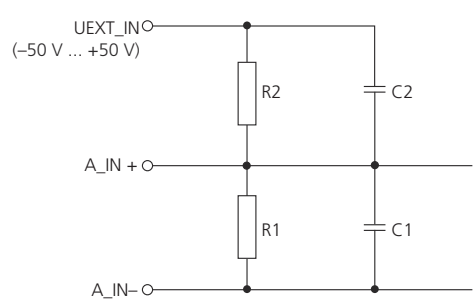

Parameter	CH1	CH2	CH3	CH4
Solder pads	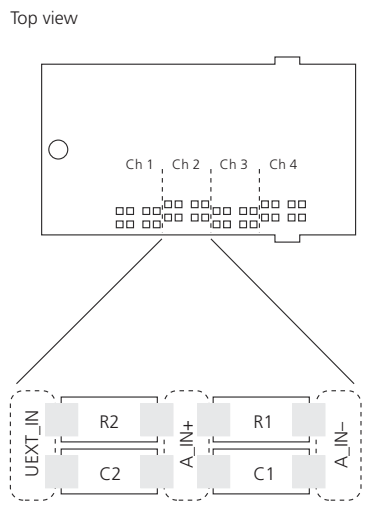			
Package type	0805 SMD			

Related topics

References

Configuration via ConfigurationDesk for RapidPro..... 174
Overview of User-Configurable Circuit..... 176
Solder Pads and Component Requirements..... 177

SC-AI 10/1 Module

Short description

The SC-AI 10/1 module (DS1633) is an analog input module with ten single-ended input channels which are referenced to isolated ground (A_GND). The module requires two slots on the unit's carrier board.

Where to go from here

Information in this section

Module Overview..... 188
Information on the module's features, components, and functionality will help you assess its possible uses.

Software Configuration..... 191
The SC-AI 10/1 module provides parameters which are software-configurable via ConfigurationDesk for RapidPro.

Hardware Configuration..... 193
The SC-AI 10/1 module provides user-configurable circuits to add electronic components (resistors, capacitors) to the input circuit of the module.

Module in Use..... 198
You have access to information (i.e., output voltages) which the module provides during operation.

Data Sheet..... 200
The data sheet summarizes the technical data of the SC-AI 10/1 module; there is also a template that you can use as a master to document your configuration settings.

Module Overview

Where to go from here

Information in this section

Module Features..... 188
Module Components and Functionality..... 188

Module Features

Main features

The main features of the SC-AI 10/1 module are:

- Ten single-ended input channels
- Input voltage range: 0 … +5 V (expandable via voltage divider on the user-configurable circuit)
- Input circuit is hardware-configurable
- Output voltage range: (GND - 0.3 V) … (VCC + 0.3 V)
- Gain: 0 dB
- Sensor supply output (galvanically isolated): 5 V / max. 200 mA

Software

ConfigurationDesk 1.0 (on dSPACE Release 4.2) or later is required to work with the SC-AI 10/1 module.

More features

For a complete list of the module's features, refer to SC-AI 10/1 Data Sheet on page 200.

Module Components and Functionality

Objective

The module's components are shown on the basis of its simplified I/O circuit. More detailed descriptions of the components are given if their functions are not clear from the I/O circuit.

I/O circuit

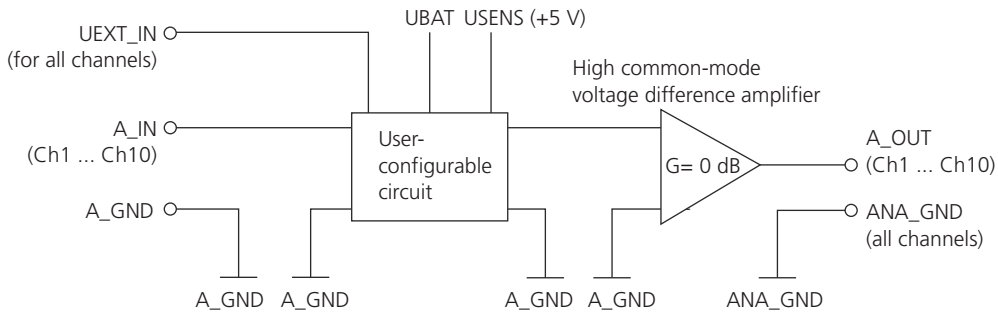

Sensor supply output:

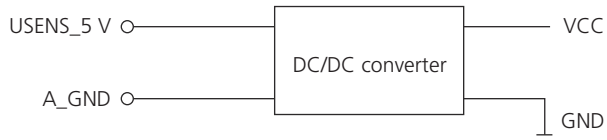

User-configurable circuit

Additional components (resistors, capacitors, diodes) can be connected to each input to adapt it to different sensor types. You can:

- Change the amplifier characteristics of the module, for example, gain and offset.
- Add a filter to the input, for example, a 1st or 2nd order low-pass filter.
- Add pull-up or pull-down configuration to the input.

Amplifier

The user-configurable circuit is followed by a high common-mode voltage difference amplifier with G = 0 dB. This is used to reference the isolated input signal to AGND and to translate a high input impedance to a lower output impedance. The amplifier will not affect the characteristics of the user-configurable circuit because its input impedance is higher than 1 GΩ.

Sensor supply

You can use the sensor supply for sensors connected to each channel of the module.

To avoid poor quality of the analog input signals, the sensor supply output is galvanically isolated from the internal supply voltages on the module by a DC/DC converter. However, do not overload the sensor supply to guarantee that the module functions properly.

There are two pins for connection, both with the same function.

Note

The module's sensor supply output behavior is defined for safety reasons as follows:

- Installed in a single unit: KL15 (switched on via ignition switch) and the ENABLE pin on the rear I/O connector R2 must be connected to get a output signal.
- Installed in a stack with UCB that is connected to a MicroAutoBox/AutoBox: The application must run to get a output signal.
- There is no module output during configuring the RapidPro system via ConfigurationDesk fpr RapidPro.

A_GND

A_GND (isolated ground) of the sensor supply output and A_GND of the input channels provide the same ground-potential. You can therefore use an I/O pin providing A_GND for the ground connection of both.

There are five pins for connection, all with the same function.

A_GND of different signal conditioning modules (same type or different type) may not provide the same ground potential. Do not use A_GND of other modules for ground connection.

Note

You *must* connect the module's ground pins, which are available on the RapidPro unit's front connectors, to the ground of the RapidPro system. Unconnected ground pins can cause the module to malfunction.
For details on grounding, refer to Evaluating Star Point Grounding Schemes (RapidPro System Hardware Installation Guide 🕮).

Related topics

Basics

Evaluating Star Point Grounding Schemes (RapidPro System Hardware Installation Guide 🕮)

References

Overview of User-Configurable Circuit..... 193

Software Configuration

Configuration via ConfigurationDesk for RapidPro

Objective

The hardware parameters of the SC-AI 10/1 module are not software-configurable. Nevertheless, ConfigurationDesk for RapidPro provides module-specific edit fields to document the values of the soldered components of the user-configurable circuit. This hardware information is stored on the module.

Hardware information

You can enter information about the user-configurable circuit on the module-specific properties dialog. The information is stored on the module as reminder and does not affect the channel's behavior.

The following table shows the relation between the parameter names used in ConfigurationDesk for RapidPro and the names of the components used in the user-configurable circuit:

Parameter in ConfigurationDesk for RapidPro	Component(s) in the Input Circuit	Description	Valid
Pull-up voltage	▪ UBAT = X10 ▪ UEXT_IN = X11 ▪ USENS = X12	You can choose the following values from a drop-down list: ▪ UEXT_IN ▪ USENS ▪ UBAT ▪ not connected	Per channel
R pull-up	X9	–	
R pull-down	X6	–	
Input voltage range (0 V … 100 V)	X5, X7	You can enter the reminder value of the input voltage range connected to A_IN. The range can be determined using a voltage divider. The value is set to +5 V by default.	
1st filter frequency (1 Hz … 65535 Hz)	X3 and X4	Value of the –3 dB cutoff frequency of the first filter (in Hz).	
2nd filter frequency (1 Hz … 65535 Hz)	X1, X2, X3, and X4	Value of the –3 dB cutoff frequency of the second filter (in Hz).	

If the components were soldered by dSPACE according to your order, the specific values are already stored.

For a detailed circuit illustration, refer to Overview of User-Configurable Circuit on page 193.

Related topics

References

Configuration Example: Configuring a Low-Pass Filter 195
Overview of User-Configurable Circuit 193
SC-AI 10/1 Configuration Template 201
Solder Pads and Component Requirements 194

Hardware Configuration

Objective

Additional electronic components can be added to the input of each channel to adapt it to different sensor types. The module provides solder pads where you can solder components like resistors, or capacitors in user-configurable circuits.

Where to go from here

Information in this section

Overview of User-Configurable Circuit..... 193
Solder Pads and Component Requirements..... 194
Configuration Example: Configuring a Low-Pass Filter..... 195

Overview of User-Configurable Circuit

Objective

Each channel of the module provides a user-configurable circuit which can be used to adapt the channel input to different sensor types.

Overview of the user-configurable circuit

The following illustration shows the circuit of the SC-AI 10/1 module for one channel. Up to 12 components (X1 … X12 = dummies) can be soldered on to configure the input circuit.

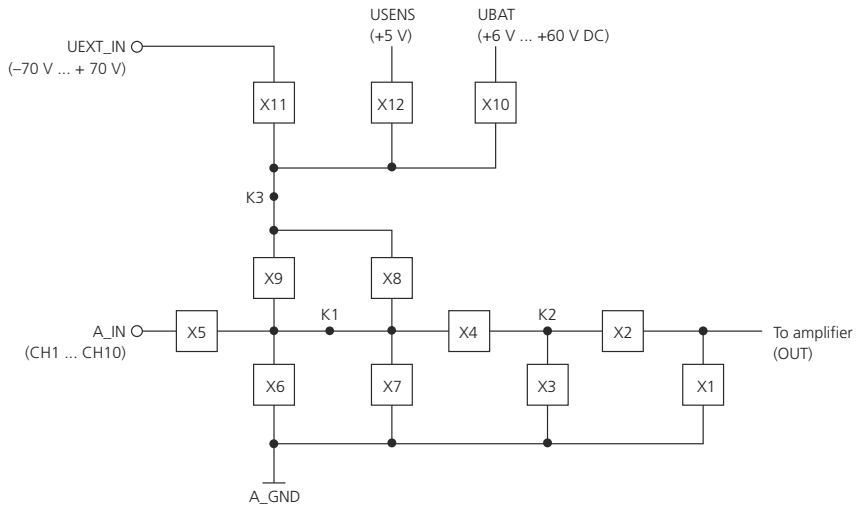

Factory default settings

The settings depend on your order as follows:

- If you did not specify components in your order the solder pads X5, X4, and X2 are soldered with 0 Ω resistors. So the input voltage range is set to 0 … +5 V.
- If you specified components in your order, these were soldered by dSPACE.

Hardware information in ConfigurationDesk for RapidPro

ConfigurationDesk for RapidPro provides a module-specific properties dialog where you can edit the values of the soldered components as reminders for each channel on the module.

For the relevant parameters, refer to Hardware information on page 191.

Related topics

Basics

Changing the Hardware Configuration of SC/PS Modules (RapidPro System Hardware Installation Guide 🕮)
Changing the Installation of SC/PS/COM Modules (RapidPro System Hardware Installation Guide 🕮)

References

Configuration via ConfigurationDesk for RapidPro..... 191
Module Components and Functionality..... 188
SC-AI 10/1 Configuration Template..... 201

Solder Pads and Component Requirements

Objective

The SC-AI 10/1 module provides solder pads to add components on the module's circuit board.

Positions of solder pads

The following illustration shows the topside of the SC-AI 10/1 module, containing the positions of the solder pads for the user-configurable circuit. The signals available at the different pads are also indicated.

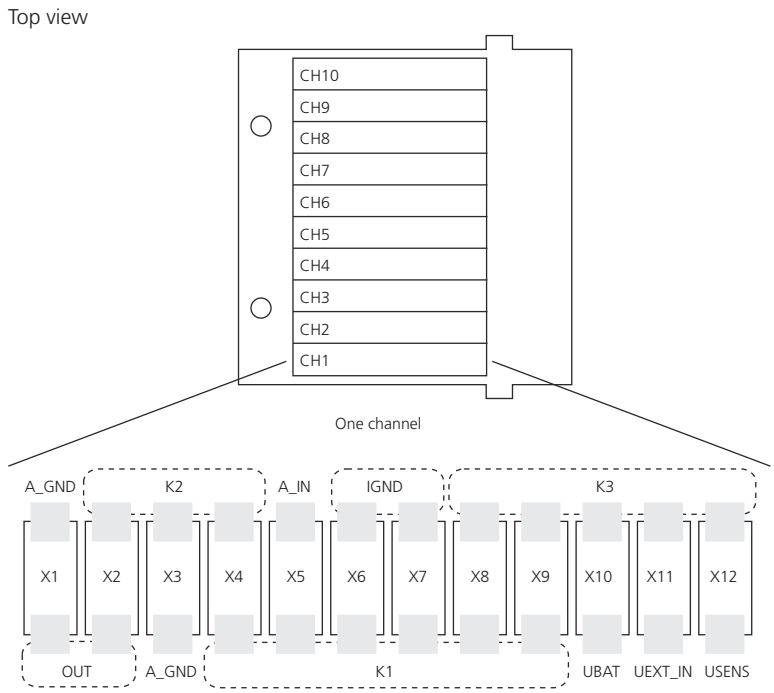

Component requirements

The circuit board is designed for soldering standard 1206 size SMDs (surface mounted devices).

Related topics

Basics

Changing the Hardware Configuration of SC/PS Modules (RapidPro System Hardware Installation Guide 🕮)
Changing the Installation of SC/PS/COM Modules (RapidPro System Hardware Installation Guide 🕮)

References

Configuration via ConfigurationDesk for RapidPro..... 191
SC-AI 10/1 Configuration Template..... 201

Configuration Example: Configuring a Low-Pass Filter

Objective

You can equip each channel with a first-order low-pass filter to filter high-frequency distortions. You can configure the –3 dB cutoff frequency by soldering resistors and capacitors.

Assignment of the components

The following illustration shows the components and their assignment:

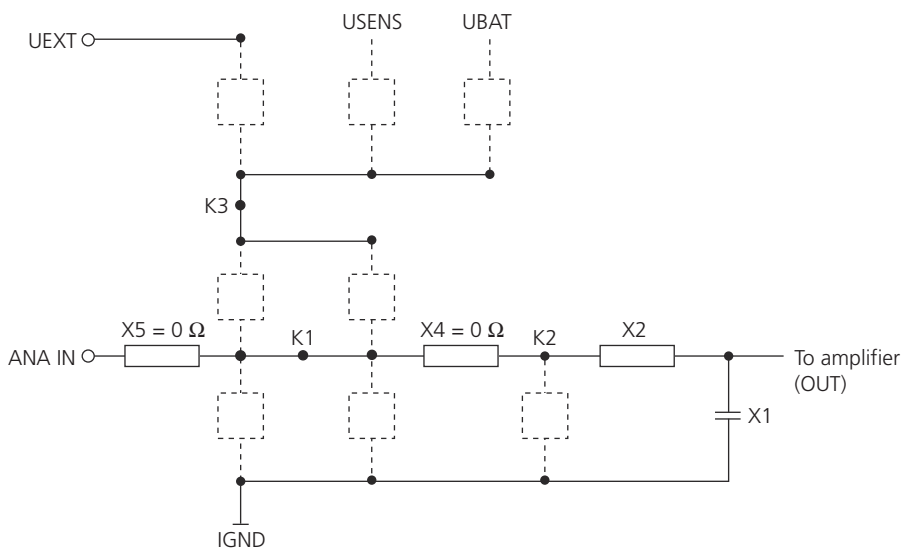

Solder the following components to realize a low pass filter:

- X5 and X4 must be soldered with 0 Ω resistors.
- X2 = resistor R
- X1 = capacitor C
- The components illustrated with doted lines must not be soldered.

Calculating the cutoff frequency

Via a 1st order lowpass filter you can set an upper cutoff frequency. The cutoff frequency fg of a low pass filter can simply be calculated using the following formula:

$$fg = \frac{1}{2 \times \pi \times R \times C}$$

Example values

The following table gives examples for different cutoff frequencies:

Cutoff Frequency fg	Resistor R	Capacitor C
10 Hz	160 kΩ	100 nF
20 Hz	75 kΩ	100 nF
50 Hz	68 kΩ	47 nF
100 Hz	16 kΩ	100 nF
200 Hz	24 kΩ	33 nF
500 Hz	6.8 kΩ	47 nF
1 kHz	16 kΩ	10 nF

Cutoff Frequency fg	Resistor R	Capacitor C
1.5 kHz	16 kΩ	6.8 nF
2 kHz	24 kΩ	3.3 nF
3 kHz	16 kΩ	3.3 nF
4 kHz	12 kΩ	3.3 nF
5 kHz	6.8 kΩ	4.7 nF

Related topics

Basics

Changing the Hardware Configuration of SC/PS Modules (RapidPro System Hardware Installation Guide 🕮)
Changing the Installation of SC/PS/COM Modules (RapidPro System Hardware Installation Guide 🕮)

References

Configuration via ConfigurationDesk for RapidPro..... 191
SC-AI 10/1 Configuration Template..... 201

Module in Use

Objective

During operation you can access status information of the SC-AI 10/1 module via ConfigurationDesk for RapidPro. The module provides:

- Permanent monitoring of the channel inputs of the module
- Diagnostic messages about the status of the module and the status of the connection to external devices

Where to go from here

Information in this section

Monitoring 198
Diagnostics 198

Monitoring

Monitored parameter

The SC-AI 10/1 provides monitoring the following parameter:

Parameter	Description	Valid
Signal Monitoring	The current voltage of each channel is displayed at a typical scan rate of approx. 200 ms. Thus, you can measure only DC signals correctly. The following illustration shows the measuring position. 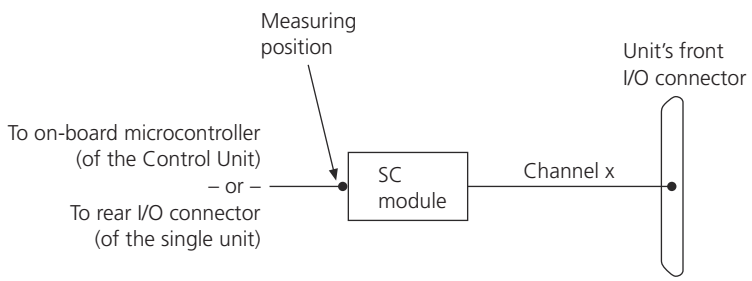	Per channel

Diagnostics

Diagnostic warnings and diagnostic errors

The diagnostic messages can be divided into warnings and errors.

- Diagnostic warnings occur if a fault is detected. Each warning is dropped as soon as the reason for it is removed.

- Diagnostic errors cause the module functions to be disabled (= Shutdown). If a diagnostic error occurs, you have to remove the source of the error and reset the module's diagnostics via ConfigurationDesk for RapidPro.

Precondition to get diagnostic messages

ConfigurationDesk for RapidPro can receive diagnostic messages about channels sent by the RapidPro modules only if the RapidPro system is in execution mode. For further information, refer to Basics on the Display of Diagnostic Messages (ConfigurationDesk for RapidPro - Guide 🕮).

Possible diagnostic messages

Diagnostic Message		Description	Valid
Warning	–	The SC-AI 10/1 module does not provide diagnostic warnings.	–
Error	Shutdown	All channels are set to shutdown mode. This means module functions are disabled.	All channels

Data Sheet

Where to go from here

Information in this section

SC-AI 10/1 Data Sheet.....200
This gives you a complete overview of the module's technical data.

SC-AI 10/1 Configuration Template.....201
You can copy and/or print out the template and use it as a master to document your configuration settings.

SC-AI 10/1 Data Sheet

Technical data

Parameter	Specification [1)]
Identification	Top view 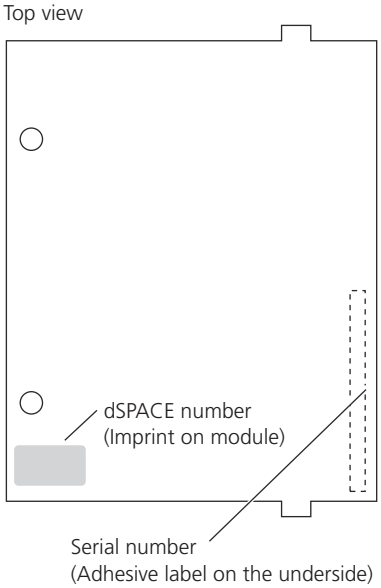 dSPACE number: DS1633
Channels	▪ 10 analog single-ended inputs ▪ 1 sensor supply output (can be used to supply sensors connected to the analog inputs)
Software	ConfigurationDesk 1.0 (on dSPACE Release 4.2) or later is required
Diagnostics	Not available

Parameter		Specification [1]
Input voltage range		0 … +5 V (= required input voltage range for high common-mode voltage difference amplifier) (– expandable via voltage divider on the user-configurable circuit)
Output voltage range		0 ... +5 V
Gain		0 dB (if the solder pads X5, X4, and X2 are soldered with 0 Ω resistors)
Input frequency		Max. 10 kHz
Input impedance		Typ. 1 GΩ (hardware configurable)
Input circuit		Additional components (resistors, capacitors, diodes) can be connected to each channel to adapt the input to different sensor types. Refer to Overview of User-Configurable Circuit on page 193.
Offset error [2]		±4 mV
Gain error [2]		±0.05 % of FSR (full scale range)
Absolute accuracy [2]		±5 mV
Overvoltage protection		Up to ±70 V continuous (unit powered on or off)
Sensor supply output	Output voltage	▪ +5.0 V ▪ Accuracy: – Max. +3 % – Typ. +2 % without load – Typ. +0.5 % with load (200 mA) [2]
	Output current	Max. 200 mA
	Isolation	Galvanically isolated from internal voltages on the module
	Protection	Voltage reverse protection up to +30 V, negative voltages cause short-circuits
Power consumption [2]		650 mW + external loads (max. 0.8 A)
Physical size (length x width)		▪ 60 x 64 mm (2.36 x 2.52 in.) ▪ Requires two slots

[1] Unless stated otherwise, the specifications are valid only if the dSPACE hardware is correctly powered, switched on, and ready for operation.
[2] Typical value at T_Housing = +25 °C (+77 °F).

SC-AI 10/1 Configuration Template

Objective

You can use the following template to document the settings of your module.

Identification and location

Enter the following parameters to identify and locate the module unambiguously.

Parameter		Specification	Label Location
Identification	dSPACE number	1633	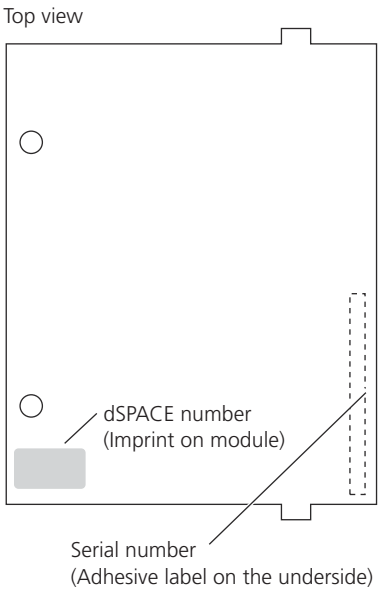
	Serial number		
	Module variant		
Place of installation	System name (unit/stack name)		
	Layer number(s) (unit position in a stack)		
	Slot number (slot on the unit's carrier board)		

User-configurable circuit

Enter the settings for each channel in the table below:

Parameter		CH1	CH2	CH3	CH4	CH5	CH6	CH7	CH8	CH9	CH10
Channel name											
UEXT_IN											
X1											
X2											
X3											
X4											
X5											
X6	R pull-down [1)]										
X7											
X8											
X9	R pull-up [1)]										
X10	Pull-up voltage [1)]										
X11											
X12											
Low-pass filter frequency 1st order [1)] (built with X3 and X4)											
Low-pass filter frequency 2nd order [1)] (built with X1, X2, X3, X4)											
Input circuit		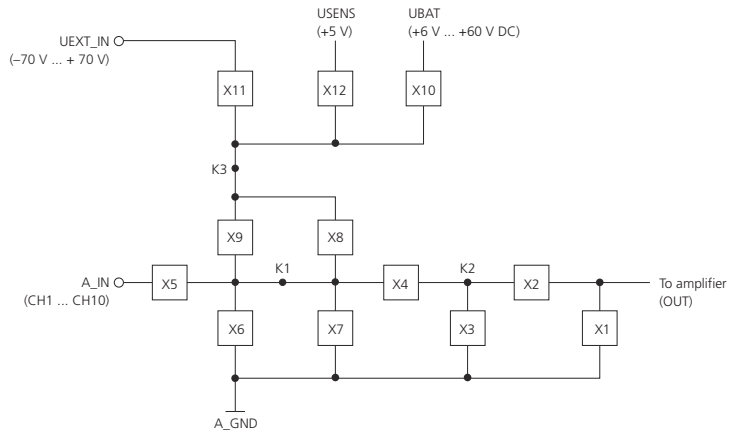									

Parameter	CH1	CH2	CH3	CH4	CH5	CH6	CH7	CH8	CH9	CH10
Solder pads	Top view 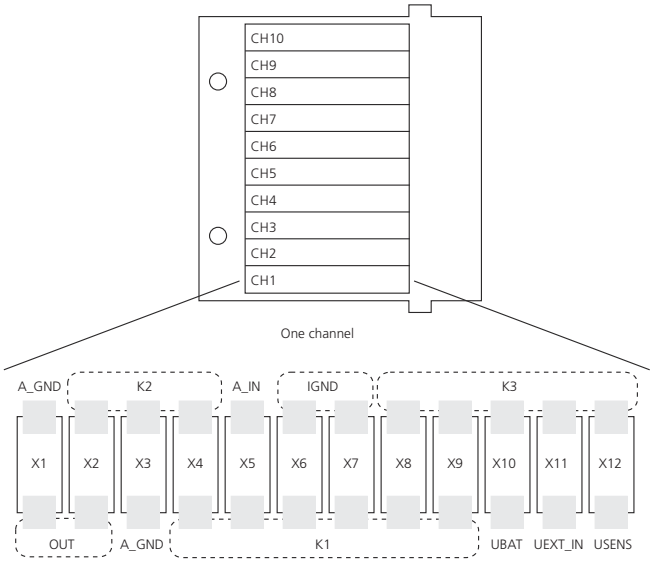									
Package type	1206 SMD									

1) Parameter in ConfigurationDesk for RapidPro

SC-DI 8/1 Module

Short description

The SC-DI 8/1 module (DS1642) is a digital input module which contains eight comparator channels.

Where to go from here

Information in this section

Module Overview.....206
Information on the module's features, components, and functionality will help you assess its possible uses.

Software Configuration.....209
The SC-DI 8/1 module provides parameters which are software-configurable via ConfigurationDesk for RapidPro.

Hardware Configuration.....211
The SC-DI 8/1 module provides user-configurable circuits to add electronic components (resistors, capacitors) to the input circuit of the module.

Connection to Sensors.....216
You have to note points regarding the cable harness if you connect sensors to the module.

Module in Use.....217
You have access to information (i.e., output voltages) which the module provides during operation.

Data Sheet.....218
The data sheet summarizes the technical data of the SC-DI 8/1 module; there is also a template that you can use as a master to document your configuration settings.

Module Overview

Where to go from here

Information in this section

Module Features.....206
Module Components and Functionality.....206

Module Features

Main features

The main features of the module are:

- Eight comparator channels
- Input voltage range: –55 V … +55 V
- Threshold voltage range: –39.5 V … +39.5 V (lower and upper threshold software-configurable)
- Input circuit is hardware-configurable
- Output voltage: TTL level

Software

ConfigurationDesk 1.0 (on dSPACE Release 4.2) or later is required to work with the SC-DI 8/1 module.

More features

For a complete list of the module's features, refer to SC-DI 8/1 Data Sheet on page 218.

Module Components and Functionality

Objective

The module's components are shown on the basis of its simplified I/O circuit. More detailed descriptions of the components are given if their functions are not clear from the I/O circuit.

I/O circuit

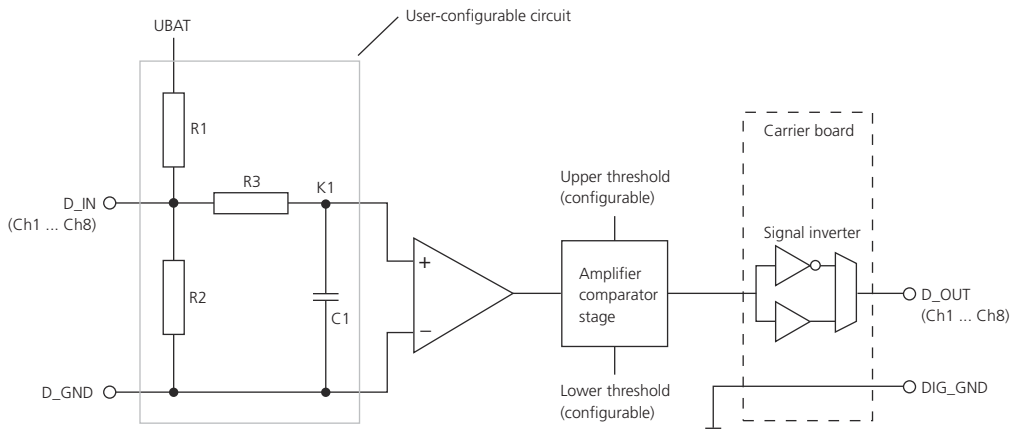

User-configurable circuit

Additional components (resistors, capacitors) can be connected to each input to adapt it to different sensor types. For example, you can add pull-up or pull-down configuration to the inputs.

For details, refer to Overview of User-Configurable Circuit on page 211.

D_GND

D_GND (isolated ground) of different signal conditioning modules (same type or different type) may not provide the same ground potential. Do not use D_GND of other modules for ground connection.

Note

You *must* connect the module's ground pins, which are available on the RapidPro unit's front connectors, to the ground of the RapidPro system. Unconnected ground pins can cause the module to malfunction.
For details on grounding, refer to Evaluating Star Point Grounding Schemes (RapidPro System Hardware Installation Guide 🕮).

Signal inverter

The logical level of the digital outputs can be inverted by signal inverters, which are integrated on the unit's carrier board. You can configure the signal polarity via ConfigurationDesk for RapidPro. For details, refer to Configuration via ConfigurationDesk for RapidPro on page 209.

Related topics

Basics

Evaluating Star Point Grounding Schemes (RapidPro System Hardware Installation Guide 🕮)

References

Overview of User-Configurable Circuit..... 211

Software Configuration

Configuration via ConfigurationDesk for RapidPro

Objective

Various parameters of the module are configurable via ConfigurationDesk for RapidPro. In addition, the software provides module-specific edit fields to document the values of the soldered components of the user-configurable circuit. This hardware information is stored on the module.

Software-configurable parameters

Parameter	Range/Setting	Factory Default Setting	Description	Valid
Upper threshold	-39.5 V … +39.5 V	2 V	The value must be greater than or equal to the lower threshold voltage.	Per channel
Lower threshold	-39.5 V … +39.5 V	0.8 V	The value must be less than or equal to the upper threshold voltage.	
Signal polarity	▪ Non-inverted ▪ Inverted	Non-inverted	Polarity of the output signal	

Storage of the signal polarity settings

The signal polarity settings are stored on the hardware as follows:

- *Using ConfigurationDesk 1.1 and later:*

  The signal polarity settings are stored on the module. If you mount the SC-DI 8/1 module in another unit, the settings you made previously are still set.
- *Using ConfigurationDesk 1.0:*

  The signal polarity settings are stored on the unit's carrier board. They do not change if you replace the SC-DI 8/1 module by another SC-DI 8/1 module.

Hardware information

You can enter information about the user-configurable circuit on the module-specific properties dialog. The information is stored on the module as reminder and does not affect the channel's behavior.

The following table shows the relation between the parameter names used in ConfigurationDesk for RapidPro and the names of the components used in the user-configurable circuit:

Parameter in ConfigurationDesk for RapidPro	Component in the Input Circuit	Description	Valid
R pull-up	R1	–	Per channel
R pull-down	R2		
Low-pass filter frequency	R3 and C1		

If the components were soldered by dSPACE according to your order, the specific values are already stored.

For a detailed circuit illustration, refer to *Overview of User-Configurable Circuit on page 211*.

Related topics

References

Configuration Example: Configuring a Pull-Up Resistor 213
Configuration Example: Configuring the Low-Pass Filter 214
Overview of User-Configurable Circuit 211
SC-DI 8/1 Configuration Template 219
Solder Pads and Component Requirements 212

Hardware Configuration

Objective

Additional electronic components can be added to the input of each channel to adapt it to different sensor types. The module provides solder pads where you can solder components like resistors or capacitors in user-configurable circuits.

Where to go from here

Information in this section

Overview of User-Configurable Circuit.....211
Solder Pads and Component Requirements.....212
Configuration Example: Configuring a Pull-Up Resistor.....213
Configuration Example: Configuring the Low-Pass Filter.....214

Overview of User-Configurable Circuit

Objective

Each channel of the module provides a user-configurable circuit which can be used to adapt the channel input to different sensor types.

Components of the user-configurable circuit

The following illustration shows the circuit of the SC-DI 8/1 module. Up to four components can be connected to configure the input circuit.

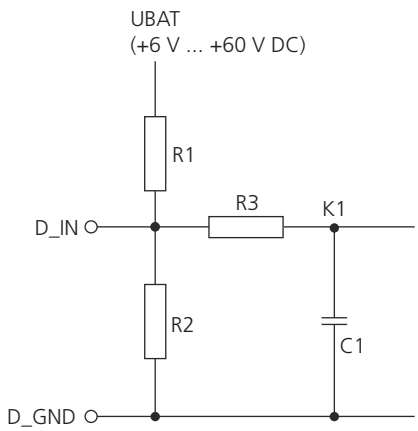

Factory default settings

The settings depend on your order as follows:

- If you did not specify components in your order, the user-configurable circuit of each channel is equipped with R3 = 0 Ω.

- If you specified components in your order, these were soldered by dSPACE.

Hardware information in ConfigurationDesk for RapidPro

ConfigurationDesk for RapidPro provides a module-specific properties dialog where you can edit the values of the soldered components as reminders for each channel on the module.

For the relevant parameters, refer to Hardware information on page 209.

Related topics

Basics

Changing the Hardware Configuration of SC/PS Modules (RapidPro System Hardware Installation Guide 🕮)
Changing the Installation of SC/PS/COM Modules (RapidPro System Hardware Installation Guide 🕮)

References

Configuration via ConfigurationDesk for RapidPro..... 209
Module Components and Functionality..... 206
SC-DI 8/1 Configuration Template..... 219

Solder Pads and Component Requirements

Objective

The SC-DI 8/1 module provides solder pads to add components on the module's circuit board.

Positions of solder pads

The following illustration shows the topside of the SC-DI 8/1 module, containing the positions of the solder pads for the user-configurable circuit. The signals available at the different pads are also indicated.

Top view

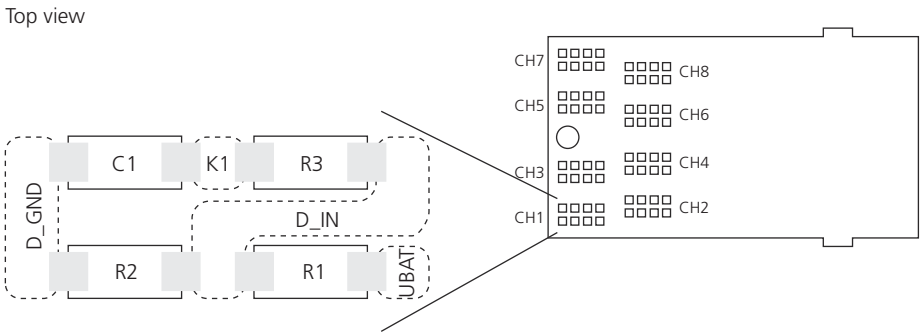

Component requirements

The circuit board is designed for soldering standard 1206 size SMDs (surface mounted devices).

Related topics

Basics

Changing the Hardware Configuration of SC/PS Modules (RapidPro System Hardware Installation Guide 🕮)
Changing the Installation of SC/PS/COM Modules (RapidPro System Hardware Installation Guide 🕮)

References

Configuration via ConfigurationDesk for RapidPro..... 209
SC-DI 8/1 Configuration Template..... 219

Configuration Example: Configuring a Pull-Up Resistor

Objective

To define the input signal, for example, for a connected sensor with three-state output, solder a pull-up resistor to the user-configurable circuit.

Assignment of the component

The illustration below shows the components and their assignment:

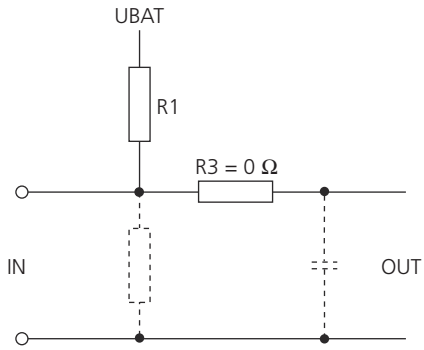

Note

The output stage of the connected device must be compatible to UBAT signals, because the pull-up resistor R1 is connected to UBAT.

Example values

R1 is typically in the range 1 kΩ … 10 kΩ. You have to choose the resistor value depending on the characteristics of the output stage of the connected sensor.

The R3 component must be an 0 Ω resistor in this configuration example.

Related topics

Basics

Changing the Hardware Configuration of SC/PS Modules (RapidPro System Hardware Installation Guide 🕮)
Changing the Installation of SC/PS/COM Modules (RapidPro System Hardware Installation Guide 🕮)

References

Configuration via ConfigurationDesk for RapidPro..... 209
SC-DI 8/1 Configuration Template..... 219

Configuration Example: Configuring the Low-Pass Filter

Objective

You can equip each channel with a first-order low-pass filter. You can configure the –3 dB cutoff frequency for each filter by soldering resistors and capacitors.

Calculating the cutoff frequency

The cutoff frequency fg of the low-pass filters is easy to calculate with the simplified formula below.

$$fg = \frac{1}{2 \times \pi \times R3 \times C1}$$

Assignment of the components

The illustration below shows the components and their assignment:

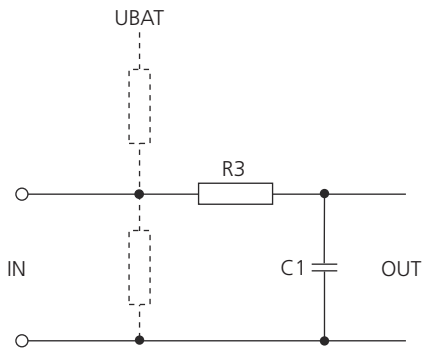

Note

The resistor R3 must not exceed 5 kΩ.

Example values

The following table shows standardized component values for different cutoff frequencies:

Cutoff Frequency fg	Resistor R3	Capacitor C1
100 Hz	1.6 kΩ	1 µF
200 Hz	2.4 kΩ	330 nF
500 Hz	3.9 kΩ	82 nF
1 kHz	1.6 kΩ	100 nF
2 kHz	2.4 kΩ	33 nF
10 kHz	1.6 kΩ	10 nF
20 kHz	2.4 kΩ	3.3 nF
50 kHz	3.9 kΩ	820 pF
100 kHz	1.6 kΩ	1 nF
200 kHz	2.4 kΩ	330 pF

Related topics

Basics

Changing the Hardware Configuration of SC/PS Modules (RapidPro System Hardware Installation Guide 🕮)
Changing the Installation of SC/PS/COM Modules (RapidPro System Hardware Installation Guide 🕮)

References

Configuration via ConfigurationDesk for RapidPro..... 209
SC-DI 8/1 Configuration Template..... 219

Connection to Sensors

Notes on Connecting Sensors

Objective

If you use the SC-DI 8/1 module in a stack with UCB, the RapidPro system can freeze if the microprocessor module of the Control Unit is overloaded with interrupt tasks. This can be determined by a faulty connection while an application is executing your RapidPro system.

Sources of defects and remedies

Source of Defect	Remedy
There is a break in a cable in the cable harness to the connected sensor.	Stop the application via ControlDesk, power off the RapidPro hardware, and check the cable harness.
There is no sensor connected.	Connect a sensor.
The cable (cable harness) is too long.	The cable harness should be as short as possible and must not be longer than 20 m (65.6 ft.).
The hysteresis of digital signals is not sufficient.	The hysteresis of digital signals should be in minimum 500 mV.
There are module inputs not connected.	Unused inputs of the module must be equipped with pull-ups (R1 and R3) or pull-downs (R2 and R3).

Module in Use

Objective

During operation you can access status information of the SC-DI 8/1 module via ConfigurationDesk for RapidPro, such as permanent monitoring of measurement values.

Monitoring

Monitored parameter

The SC-DI 8/1 provides monitoring the following parameter:

Parameter	Description	Valid
Signal Monitoring	The current logic level of each channel is displayed at a typical scan rate of approx. 200 ms. Thus, you can measure only DC signals correctly. The following illustration shows the measuring position. 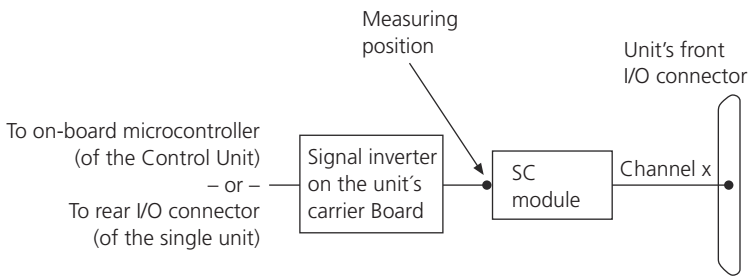	Per channel

Data Sheet

Where to go from here

Information in this section

SC-DI 8/1 Data Sheet.....218
This gives you a complete overview of the module's technical data.

SC-DI 8/1 Configuration Template.....219
You can copy and/or print out the template and use it as a master to document your configuration settings.

SC-DI 8/1 Data Sheet

Technical data

Parameter	**Specification** [1)]
Identification	Top view 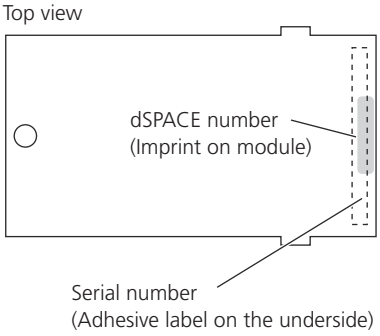 dSPACE number: DS1642
Channels	8 comparator inputs
Software	ConfigurationDesk 1.0 (on dSPACE Release 4.2) or later is required
Diagnostics	Not available
Input voltage range	–55 V … +55 V
Input frequency	Max. 1 MHz at TTL-Level
Input impedance	Min. 170 kΩ (for R3 = 0 Ω; R1, R2, C1 not soldered)
Input circuit	Additional components (resistors, capacitors) can be connected to each channel to adapt the input to different sensor types.
Bandwidth	5 MHz
Threshold voltage range	▪ –39.5 V … +39.5 V ▪ Lower and upper threshold software-configurable

Parameter		Specification [1]
Threshold voltage accuracy		1% ±100 mV (for R3 = 0 Ω)
Output voltage		TTL output voltage level
Output current		Max. 24 mA
Propagation delay	Low to high	▪ Typ. 110 ns ▪ Max. 140 ns
	High to low	▪ Typ. 100 ns ▪ Max. 140 ns
Overvoltage protection		Up to ±70 V continuous (unit powered on or off)
Physical size (length x width)		▪ 60 x 31.5 mm (2.36 x 1.24 in.) ▪ Requires one slot

[1] Unless stated otherwise, the specifications are valid only if the dSPACE hardware is correctly powered, switched on, and ready for operation.

SC-DI 8/1 Configuration Template

Objective

You can use the following template to document the settings of your module.

Identification and location

Enter the following parameters to identify and locate the module unambiguously.

Parameter		Specification	Label Location
Identification	dSPACE number	1642	Top view 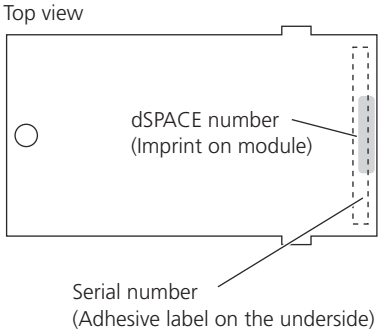
	Serial number		
	Module variant		
Place of installation	System name (unit/stack name)		
	Layer number(s) (unit position in a stack)		
	Slot number (slot on the unit's carrier board)		

Software configuration

Enter the settings for each channel in the table below:

Parameter	CH1	CH2	CH3	CH4	CH5	CH6	CH7	CH8
Channel name								
Upper threshold voltage								
Lower threshold voltage								
Signal polarity								

User-configurable circuit

Enter the settings for each channel in the table below:

Parameter		CH1	CH2	CH3	CH4	CH5	CH6	CH7	CH8
Channel name									
UBAT									
R1	R pull-up [1]								
R2	R pull-down [1]								
R3	Low-pass filter frequency[1]								
C1									
Input circuit		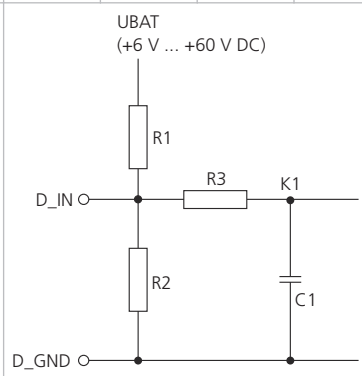							
Solder pads		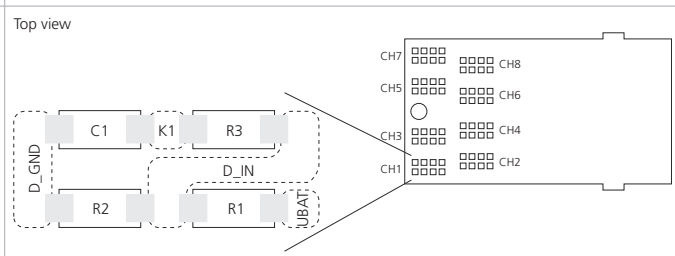							
Package type		1206 SMD							

[1] Parameter in ConfigurationDesk for RapidPro

SC-DO 8/1 Module

Short description

The SC-DO 8/1 module (DS1646) is a digital output module providing eight decoupled open drain outputs.

Where to go from here

Information in this section

Module Overview.....222
Information on the module's features, components, and functionality will help you assess its possible uses.

Software Configuration.....225
The SC-DO 8/1 module provides parameters which are software-configurable via ConfigurationDesk for RapidPro.

Hardware Configuration.....227
The SC-DO 8/1 module provides user-configurable circuits to add electronic components (resistors) to the output circuit of the module.

Connection to Peripheral Devices.....230
When you connect peripheral devices, there are points to note.

Module in Use.....232
You have access to information (i.e., input voltages) which the module provides during operation.

Data Sheet.....234
The data sheet summarizes the technical data of the SC-DO 8/1 module; there is also a template that you can use as a master to document your configuration settings.

Module Overview

Where to go from here

Information in this section

Module Features.....222
Module Components and Functionality.....222

Module Features

Main features

The main features of the module are:

- Eight decoupled open drain outputs
- Output voltage: +40 V continuous
- Output current: max. 1 A each channel, however max. 1 A per module
- Overload protection
- Short-circuit proof

Software

ConfigurationDesk 1.0 (on dSPACE Release 4.2) or later is required to work with the SC-DO 8/1 module.

More features

For a complete list of the module's features, refer to SC-DO 8/1 Data Sheet on page 234.

Module Components and Functionality

Objective

The module's components are shown on the basis of its simplified I/O circuit. More detailed descriptions of the components are given if their functions are not clear from the I/O circuit.

I/O circuit

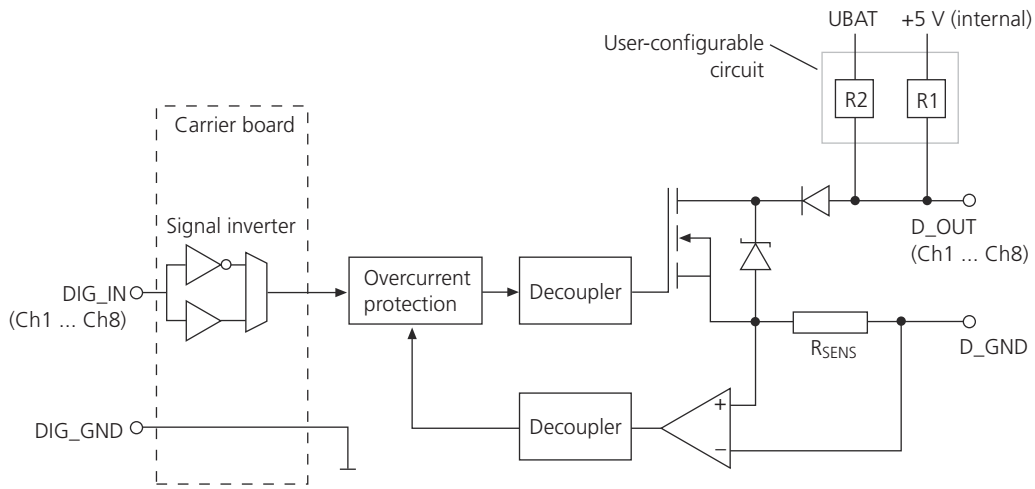

Overcurrent protection

The overcurrent protection (= overload protection) is realized as a closed-loop. The state of the closed-loop is controlled by the voltage that is measured at the current sensing resistor (R_{SENS}).

The overcurrent protection limits the output current to max. 1 A each channel, however to max. 1 A per module.

User-configurable circuit

Additional components (resistors) can be connected to each input to adapt it to different sensor types. You can add pull-up resistors or to the outputs. For details, refer to Overview of User-Configurable Circuit on page 227.

Signal inverter

The logical level of the digital inputs can be inverted by signal inverters, which are integrated on the unit's carrier board. You can configure this signal polarity via ConfigurationDesk for RapidPro. For details, refer to Configuration via ConfigurationDesk for RapidPro on page 225.

D_GND

D_GND (isolated ground) of different signal conditioning modules (same type or different type) may not provide the same ground potential. Do not use D_GND of other modules for ground connection.

Note

You *must* connect the module's ground pins, which are available on the RapidPro unit's front connectors, to the ground of the RapidPro system. Unconnected ground pins can cause the module to malfunction.
For details on grounding, refer to Evaluating Star Point Grounding Schemes (RapidPro System Hardware Installation Guide 🕮).

Related topics

Basics

Evaluating Star Point Grounding Schemes (RapidPro System Hardware Installation Guide 🕮)

References

Overview of User-Configurable Circuit..... 227

Software Configuration

Configuration via ConfigurationDesk for RapidPro

Objective

The channels of the module are configurable via ConfigurationDesk for RapidPro. In addition, the software provides module-specific edit fields to document the values of the soldered components of the user-configurable circuit. This hardware information is stored on the module.

Software-configurable parameter

Parameter	Range/Setting	Factory Default Setting	Description	Valid
Signal polarity	▪ Non-inverted ▪ Inverted	Non-inverted	Polarity of the input signal	Per channel

⚠ WARNING

Changing the signal polarity can damage the connected devices.

- Before changing this parameter think through the effects of the changes you are planning.
- You can also invert the signal via the RTI RapidPro Control Unit Blockset (if used). If you are not sure what the actual polarity is, measure/monitor the output signals before connecting a device.

Storage of the signal polarity settings

The signal polarity settings are stored on the hardware as follows:

- *Using ConfigurationDesk 1.1 and later:*

  The signal polarity settings are stored on the module. If you mount the SC-DO 8/1 module in another unit, the settings you made previously are still set.
- *Using ConfigurationDesk 1.0:*

  The signal polarity settings are stored on the unit's carrier board. They do not change if you replace the SC-DO 8/1 module by another SC-DO 8/1 module.

Hardware information

You can enter information about the user-configurable circuit on the module-specific properties dialog. The information is stored on the module as reminder and does not affect the channel's behavior.

The following table shows the relation between the parameter names used in ConfigurationDesk for RapidPro and the names of the components used in the user-configurable circuit:

Parameter in ConfigurationDesk for RapidPro	Component in the Output Circuit	Description	Valid
Pull-up voltage	▪ UBAT = R2 ▪ U5V = R1	You can choose the following values from a drop-down list: ▪ UBAT ▪ U5V ▪ not connected	Per channel
R pull-up	R1 or R2	Stores the value of the pull-up resistor.	

If the components were soldered by dSPACE according to your order, the specific values are already stored.

For details on the output circuits, refer to Overview of User-Configurable Circuit on page 227.

Related topics

References

Overview of User-Configurable Circuit 227
SC-DO 8/1 Configuration Template 235
Solder Pads and Component Requirements 228

Hardware Configuration

Objective

Additional electronic components can be added to the output of each channel to adapt it to different external devices. The module provides solder pads where you can solder pull-up resistors in user-configurable circuits.

Where to go from here

Information in this section

Overview of User-Configurable Circuit.....227
Solder Pads and Component Requirements.....228

Overview of User-Configurable Circuit

Objective

Each channel of the module provides a user-configurable circuit. This is to adapt it to different use cases.

Overview of the user-configurable circuit

The following illustration shows the user-configurable circuit of the module. You must connect either a pull-up resistor to UBAT or to +5 V.

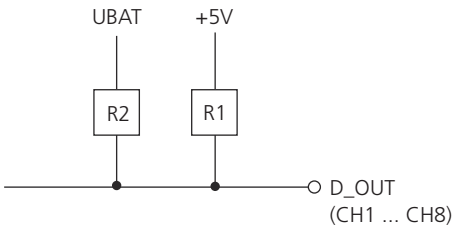

Note

- If you solder a pull-up resistor to +5 V, note that the maximum output current is 160 mA for all channels in total.
- If you solder a pull-up resistor to UBAT, note that UBAT must not exceed 40 V to avoid damage to the SC-DO 8/1 module.

Factory default settings

The settings depend on your order as follows:

- If you did not specify components in your order, the user-configurable circuit is shipped without components.
- If you specified components in your order, these were soldered by dSPACE.

Hardware information in ConfigurationDesk for RapidPro

ConfigurationDesk for RapidPro provides a module-specific properties dialog where you can edit the values of the soldered components as reminders for each channel on the module.

For the relevant parameters, refer to Hardware information on page 225.

Related topics

Basics

Changing the Hardware Configuration of SC/PS Modules (RapidPro System Hardware Installation Guide 🕮)
Changing the Installation of SC/PS/COM Modules (RapidPro System Hardware Installation Guide 🕮)

References

Configuration via ConfigurationDesk for RapidPro..... 225
Module Components and Functionality..... 222
SC-DO 8/1 Configuration Template..... 235

Solder Pads and Component Requirements

Objective

The SC-DO 8/1 module provides solder pads to add components on the module's circuit board.

Positions of solder pads

The following illustration shows the topside of the module, containing the positions of the solder pads.

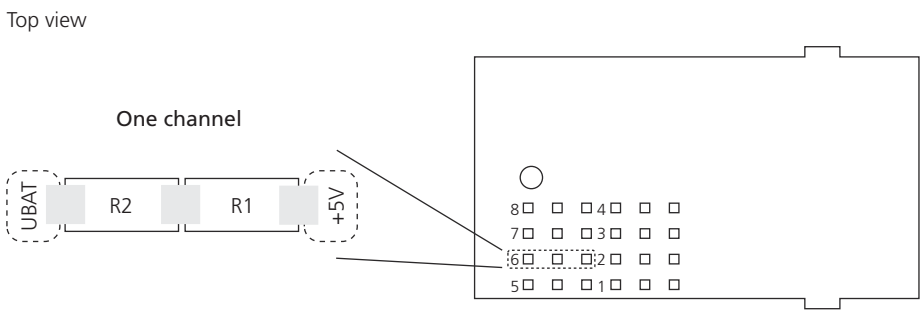

Component requirements

- The circuit board is designed for soldering standard 1206 size SMDs (surface mounted devices).
- The value of the pull-up resistors depend on the specifics of your application and must be in the range 500 Ω … 10 kΩ.

Related topics

Basics

Changing the Hardware Configuration of SC/PS Modules (RapidPro System Hardware Installation Guide 🕮)
Changing the Installation of SC/PS/COM Modules (RapidPro System Hardware Installation Guide 🕮)

References

Configuration via ConfigurationDesk for RapidPro..... 225
SC-DO 8/1 Configuration Template..... 235

Connection to Peripheral Devices

Output Behavior Depending on the Signal Polarity Parameter

Objective

Using the signal generation (PWM or bit I/O) with the above mentioned modules can cause unintended movements and/or material damage of connected devices in specific operating modes. You have to note the effects which the module's input signal can have on the connected load.

Current output on the load

In the following the interaction between input and output is shown, using a Control Unit (I/O subsystem with MPC565) with the RapidPro RTI Blockset.

The descriptions also apply to all other fields of application where RapidPro hardware and signal generation (PWM or bit I/O) are involved, such as a single RapidPro unit connected to MicroAutoBox using implementation software (RTLib, etc.).

The duty cycle setting you make in your Simulink® model with the RapidPro RTI Blockset and the signal polarity set with ConfigurationDesk for RapidPro take effect on the connected load.

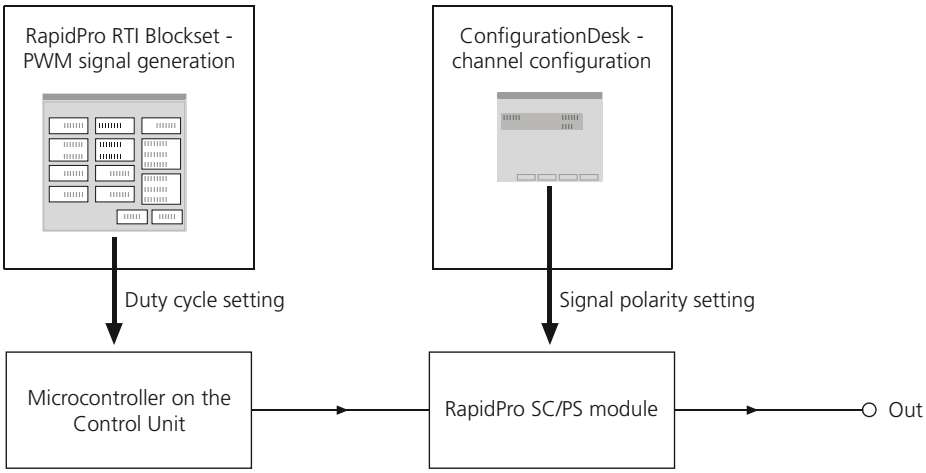

The following table shows the effect of the selected duty cycle to the connected load:

Duty Cycle	Signal Polarity	Output Current
"0"	Non-inverted	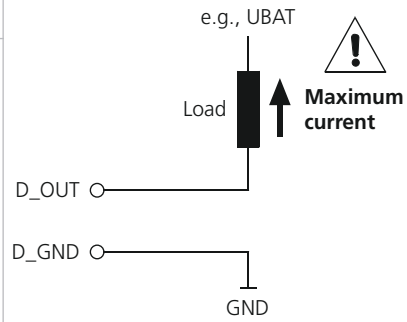
"1"	Inverted	
"1"	Non-inverted	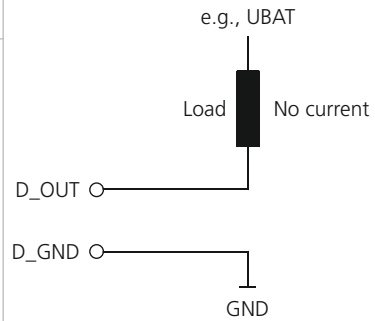
"0"	Inverted	

Module in Use

Objective

During operation you can access status information of the SC-DO 8/1 module via ConfigurationDesk for RapidPro. The module provides:

- Permanent monitoring of the channel inputs of the module
- Diagnostic messages about the status of the module and the status of the connection to external devices

Where to go from here

Information in this section

Monitoring.....232
Diagnostics.....232

Monitoring

Monitored parameters

The SC-DO 8/1 provides monitoring the following parameter:

Parameter	Description	Valid
Signal Monitoring	The current voltage of each channel is displayed at a typical scan rate of approx. 200 ms. The following illustration shows the measuring position. 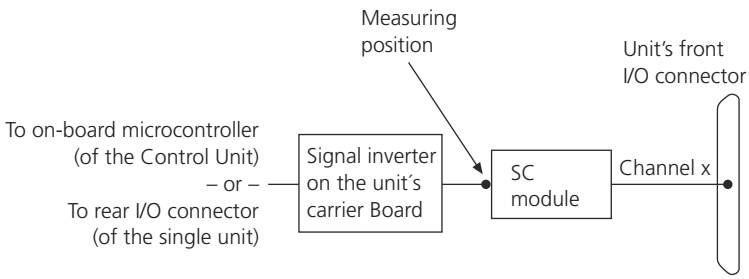	Per channel

Diagnostics

Diagnostic warnings and diagnostic errors

The diagnostic messages can be divided into warnings and errors.

- Diagnostic warnings occur if a fault is detected. Each warning is dropped as soon as the reason for it is removed.

- Diagnostic errors cause the module functions to be disabled (= Shutdown). If a diagnostic error occurs, you have to remove the source of the error and reset the module's diagnostics via ConfigurationDesk for RapidPro.

Precondition to get diagnostic messages

ConfigurationDesk for RapidPro can receive diagnostic messages about channels sent by the RapidPro modules only if the RapidPro system is in execution mode. For further information, refer to Basics on the Display of Diagnostic Messages (ConfigurationDesk for RapidPro - Guide 🕮).

Possible diagnostic messages

Diagnostic Message		Description	Valid
Warning	–	The SC-DO 8/1 module does not provide diagnostic warnings.	–
Error	Overcurrent	The current is limited to 1 A per module. If this limit is exceeded the message "Overcurrent" is displayed. This message always occurs together with the diagnostic message Shutdown.	All channels
	Shutdown	If an overcurrent situation occurs, all channels are set to shutdown mode. This means module functions are disabled.	

Data Sheet

Where to go from here

Information in this section

SC-DO 8/1 Data Sheet.....234
This gives you a complete overview of the module's technical data.

SC-DO 8/1 Configuration Template.....235

SC-DO 8/1 Data Sheet

Technical data

Parameter		**Specification** [1)]
Identification		Top view 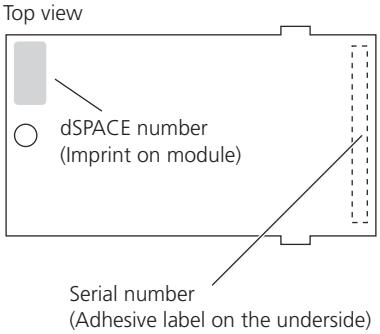 Imprint on module: DS1646
Channels		8 open drain digital outputs
Software		ConfigurationDesk 1.0 (on dSPACE Release 4.2) or later is required
Diagnostics		Overcurrent, shutdown
Output voltage		Max. 40 V
Output current	With external pull-up	Max. 1 A for all channels in total
	With pull-up to + 5 V	Max. 160 mA for all channels in total
Propagation delay	High – Low	Typ. 530 ns
	Low – High	Typ. 140 ns

Parameter		Specification [1]
Rise time	R_{load} = 500 Ω	Typ. 450 ns
	R_{load} = 1 kΩ	Typ. 860 ns
	R_{load} = 10 kΩ	Typ. 7 µs
Fall time		Typ. 120 ns
Isolation		Inductive decoupling
Protection		Overload protection limits output current to 1 A per module
Physical size (length x width)		▪ 60 x 31.5 mm (2.36 x 1.24 in.) ▪ Requires one slot

[1] Unless stated otherwise, the specifications are valid only if the dSPACE hardware is correctly powered, switched on, and ready for operation.

SC-DO 8/1 Configuration Template

Objective

You can use the following template as a master to document the settings of your module.

Identification and location

Enter the following parameters to identify and locate the module unambiguously.

Parameter		Specification	Label Location
Identification	dSPACE number	1646	Top view 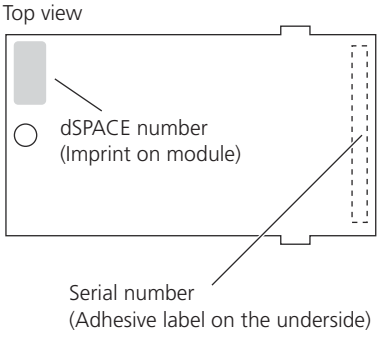
	Serial number		
	Module variant		
Place of installation	System name (unit/stack name)		
	Layer number(s) (unit position in a stack)		
	Slot number (slot on the unit's carrier board)		

Software configuration

Enter the settings for each channel in the table below:

Parameter	CH1	CH2	CH3	CH4	CH5	CH6	CH7	CH8
Channel name								
Signal polarity								

User-configurable circuit

Enter the settings for each channel in the table below:

Parameter		CH1	CH2	CH3	CH4	CH5	CH6	CH7	CH8
Channel name									
R1	R pull-up [1]								
R2									
Pull-up voltage [1]									
Output circuit		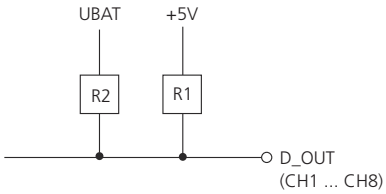							
Solder pads		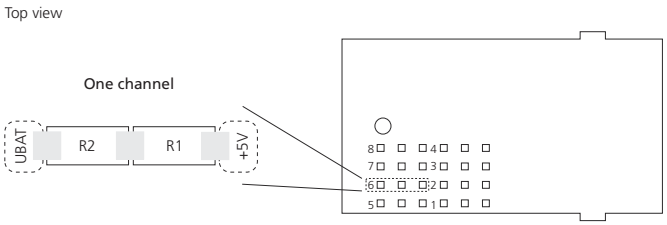							
Package type		1206 SMD							

[1] Parameter in ConfigurationDesk for RapidPro

SC-DO 8/2 Module

Short description

The SC-DO 8/2 module (DS1647) is a digital output module providing eight galvanically isolated outputs which can operate in different output modes (push/pull, low-side, or high-side).

Where to go from here

Information in this section

Module Overview.....238
Information on the module's features, components, and functionality will help you assess its possible uses.

Software Configuration.....241
The SC-DO 8/2 module provides parameters which are software-configurable via ConfigurationDesk for RapidPro.

Module in Use.....243
You have access to information (e. g., temperatures on the circuit board) which the module provides during operation.

Connection to Peripheral Devices.....245
There are points to note when you connect peripheral devices.

Data Sheet.....249
The data sheet summarizes the technical data of the SC-DO 8/2 module; there is also a template that you can use as a master to document your configuration settings.

Module Overview

Where to go from here

Information in this section

Module Features.....238
Module Components and Functionality.....238

Module Features

Main features

The main features of the module are:

- Eight galvanically isolated digital outputs
- The output mode (push/pull, low-side, or high-side) is software configurable for each channel
- Voltages are switched up to 30 V (only in low-side mode)
- 5 V TTL/CMOS compatible output (only in push/pull mode)

Software

The following software combinations are required to work with the SC-DO 8/2 module:

- From ConfigurationDesk 1.2.1 (on dSPACE Release 5.4) up to ConfigurationDesk 3.0 (on dSPACE Release 6.3) with specific plug-in software
- ConfigurationDesk 3.0.1 (on dSPACE Release 6.4) or later

More features

For a complete list of the module's features, refer to SC-DO 8/2 Data Sheet on page 249.

Module Components and Functionality

Objective

The module's components are shown on the basis of its simplified I/O circuit. More detailed descriptions of the components are given if their functions are not clear from the I/O circuit.

I/O circuit

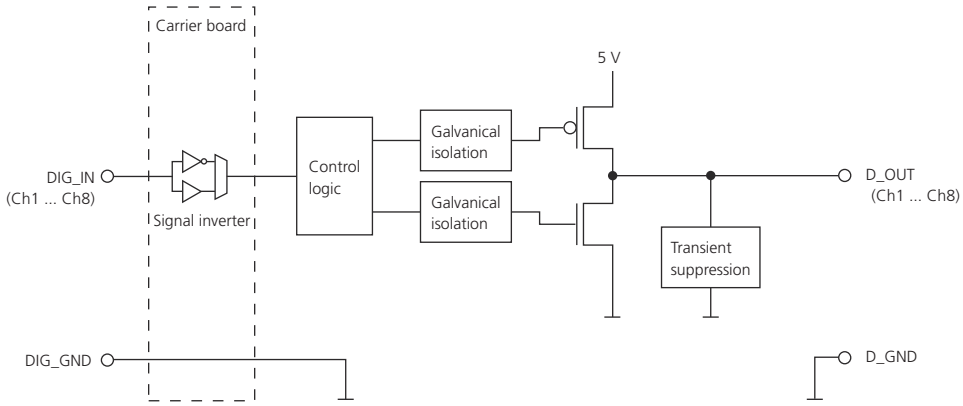

Signal inverter

The logical level of the digital inputs can be inverted by signal inverters, which are integrated on the unit's carrier board. You can configure this signal polarity via ConfigurationDesk for RapidPro. For details, refer to Configuration via ConfigurationDesk for RapidPro on page 241.

Galvanically isolated

All channels of the SC-DO 8/2 module are galvanically isolated from their outputs.

Configuring the output mode

You can use each channel of the SC-DO 8/2 module as either a push/pull, high-side, or low-side driver.

You can choose between the output modes via ConfigurationDesk for RapidPro. For further information, refer to Configuration via ConfigurationDesk for RapidPro on page 241.

For connection examples of the different output modes, refer to Connection to Peripheral Devices on page 245.

Output behavior

The behavior of the outputs depends on the state of the RapidPro system:

- *When booting the RapidPro system*

  All channel outputs of the SC-DO 8/2 module are set to high impedance (*tristate*) for max. 100 ms when booting the RapidPro system. When the system is ready after booting the specified state takes place (see below).

- *In idle mode*

  You can specify a defined state for the channel outputs if the RapidPro system is in idle mode. For further information, refer to Configuration via ConfigurationDesk for RapidPro on page 241.

  For information on the idle mode, refer to Characteristics of Application States and Operating Modes (ConfigurationDesk for RapidPro - Guide 🕮).

- *If an error occurs*

  The temperature of the module is permanently monitored. If the condition for overheat occurs, the channel outputs are set to high impedance (*tristate*) (see Diagnostics on page 243).

Transient suppression

Each channel has a suppressor diode at the output to protect against transient overvoltage spikes.

D_GND

D_GND (isolated ground) of different signal conditioning modules (same type or different type) may not provide the same ground potential. Do not use D_GND of other modules for ground connection.

Note

You *must* connect the module's ground pins, available on the RapidPro unit's front connectors, to the ground of the RapidPro system. Unconnected ground pins can cause the module to malfunction.
For details on grounding, refer to Evaluating Star Point Grounding Schemes (RapidPro System Hardware Installation Guide 🕮).

Short circuit

Note

A short circuit of one or more channels to a voltage > 14 V damages the module.

Related topics

Basics

Evaluating Star Point Grounding Schemes (RapidPro System Hardware Installation Guide 🕮)

Software Configuration

Configuration via ConfigurationDesk for RapidPro

Objective

The channels of the module are configurable via ConfigurationDesk for RapidPro.

Software-configurable parameter

Parameter	Range/Setting	Factory Default Setting	Description	Valid
Signal polarity	▪ Non-inverted ▪ Inverted	Non-inverted	Polarity of the input signal	Per channel
Output driver mode	Push/pull	Push/pull	The output is a digital signal (TTL-level). You can use it to control externally connected power amplifiers, such as electric motors, or ignition stages.	
	Low side		The channel's output switches a load to the low side. The load is connected on the other side to a voltage.	
	High side		The channel's output switches a load to the high side. The load is connected on the other side to ground. You can use the high-side mode, for example, with two or more channels wired together as a *wired OR*.	
Output driver state in idle mode	▪ Tristate ▪ Low ▪ High	Tristate	Lets you specify a defined state for the channel outputs if the RapidPro system is in idle mode. *Tristate* means the output is set to high impedance. So the output is set to a defined enable state.	Per channel

⚠ WARNING

Changing the signal polarity can damage the connected devices.

- Before changing this parameter, consider the implications that the change will have.

Module in Use

Objective

During operation you can access status information on the SC-DO 8/2 module via ConfigurationDesk for RapidPro. The module provides:

- Permanent monitoring of the channel inputs of the module
- Diagnostic messages about the status of the module

Where to go from here

Information in this section

Monitoring.....243
Diagnostics.....243

Monitoring

Monitored parameters

The SC-DO 8/2 provides monitoring of the following parameter:

Parameter	Description	Valid
Temperature	The temperature is measured via a sensor on the module's circuit board. The monitored temperature serves for troubleshooting purposes.	For the module
Signal Monitoring	The current voltage of each channel is displayed at a typical scan rate of approx. 200 ms. The following illustration shows the measuring position. 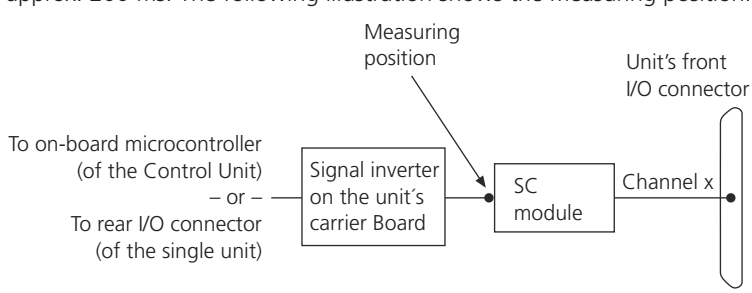	Per channel

Diagnostics

Diagnostic warnings and diagnostic errors

There are two types of diagnostic messages: warnings and errors:

- Diagnostic warnings occur if a fault is detected. Each warning is dropped as soon as the reason for it is removed.

- Diagnostic errors cause the module functions to be disabled (= Shutdown). If a diagnostic error occurs, you have to remove the source of the error and reset the module's diagnostics via ConfigurationDesk for RapidPro.

Precondition to get diagnostic messages

ConfigurationDesk for RapidPro can receive diagnostic messages about channels sent by the RapidPro modules only if the RapidPro system is in execution mode. For further information, refer to Basics on the Display of Diagnostic Messages (ConfigurationDesk for RapidPro - Guide 🕮).

Possible diagnostic messages

Diagnostic Message		Description	Valid
Warning	Overheat	The temperature on the module has reached a critical value. All modules outputs are set to high impedance (tristate). If the temperature falls under the critical value, the outputs are automatically enabled again. **Note** The temperature is measured on the module and the outputs set to high impedance (tristate) even if the RapidPro system is in idle mode. Consequently, the state of the outputs can differ from your configured setting of the **Output driver state in idle mode** parameter (see Configuration via ConfigurationDesk for RapidPro on page 241). When the RapidPro system is in idle mode neither ConfigurationDesk for RapidPro nor the LED on the front panel of the system indicate if overheat occurs.	All channels
Error	Shutdown	All channels are set to shutdown mode. This means module functions are disabled.	

Connection to Peripheral Devices

Where to go from here

Information in this section

Connecting External Devices in Push/Pull Mode.....245
Connecting Loads in Low Side Mode.....246
Connecting Loads in High Side Mode.....247

Connecting External Devices in Push/Pull Mode

Objective

If you specify the push/pull mode of the SC-DO 8/2 module you have to note the internal circuit of the module. The circuit is shown in the simple illustration below.

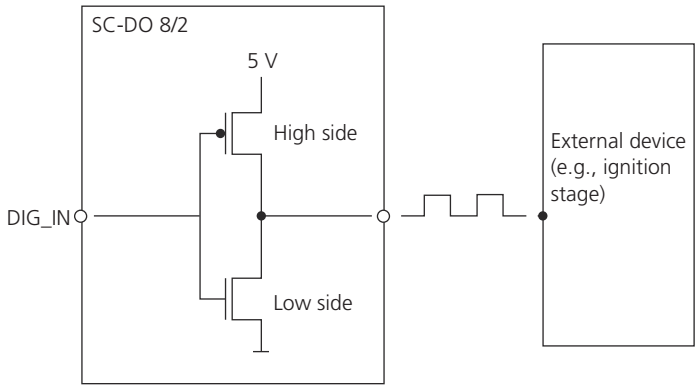

Current enhancement

Channels can be connected in parallel to enhance the maximum possible current.

Note

You must consider the two different use scenarios if you want to use channels in parallel.

- *Installed in a single SC Unit – signal conditioning and power stage use scenario*
  The inputs of all parallel channels must be controlled by the same signal to ensure synchronous switching.
- *Installed in a stack with UCB – intelligent I/O subsystem use scenario*
  You need a custom-built routing code to connect channels of the SC-DO 8/2 module in parallel. Contact dSPACE for an appropriate routing code.

Connecting Loads in Low Side Mode

Objective

The load of channel in low-side mode must be connected at one side to a voltage as shown in the illustration below.

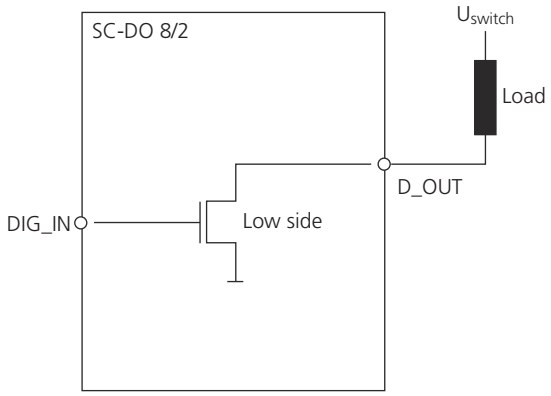

Short-circuit strength

Note

A short circuit of one or more channels to a voltage over 14 V can damage the module.

Maximum switchable voltage

Note

The maximum voltage (U_{switch}) can differ from UBAT but must not exceed 30 V.

Current enhancement

Channels can be connected in parallel to enhance the maximum possible current.

Note

You must consider the two different use scenarios if you want to use channels in parallel.

- *Installed in a single SC Unit – signal conditioning and power stage use scenario*
  The inputs of all parallel channels must be controlled by the same signal to ensure synchronous switching.
- *Installed in a stack with UCB – intelligent I/O subsystem use scenario*
  You need a custom-built routing code to connect channels of the SC-DO 8/2 module in parallel. Contact dSPACE for an appropriate routing code.

Connecting Loads in High Side Mode

Objective

The load of channel in high-side mode must be connected at one side to GND as shown in the illustration below.

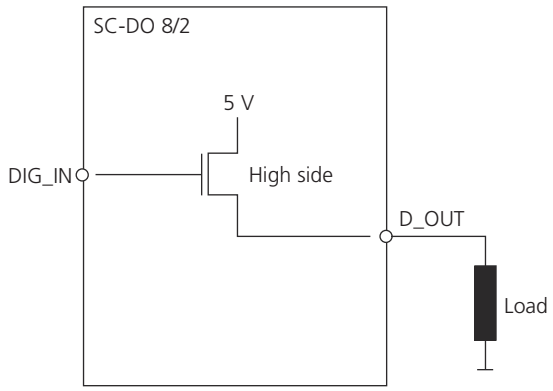

Use case

You can use the SC-DO 8/2 module in high-side mode, for example, as a *wired OR* as shown in the illustration below.

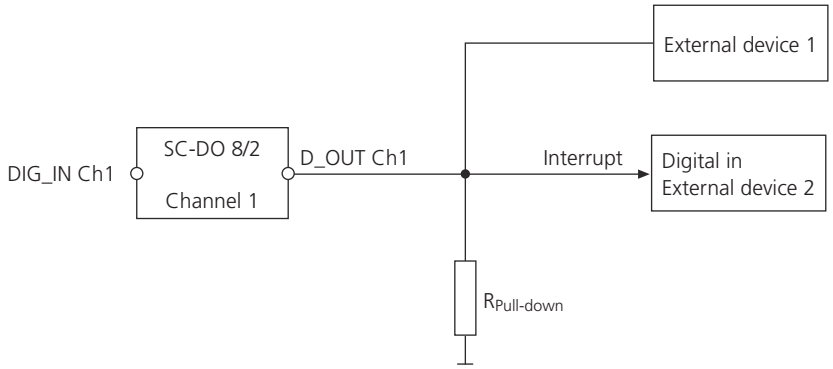

Current enhancement

Channels can be connected in parallel to enhance the maximum possible current.

Note

You must consider the two different use scenarios if you want to use channels in parallel.

- *Installed in a single SC Unit – signal conditioning and power stage use scenario*
  The inputs of all parallel channels must be controlled by the same signal to ensure synchronous switching.
- *Installed in a stack with UCB – intelligent I/O subsystem use scenario*
  You need a custom-built routing code to connect channels of the SC-DO 8/2 module in parallel. Contact dSPACE for an appropriate routing code.

Data Sheet

Where to go from here

Information in this section

SC-DO 8/2 Data Sheet.....249
This gives you a complete overview of the module's technical data.

SC-DO 8/2 Configuration Template.....250

SC-DO 8/2 Data Sheet

Technical data

Parameter		**Specification** [1)]
Identification		Top view 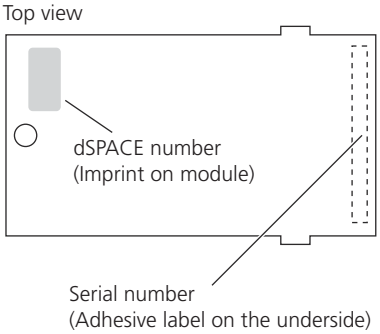 Imprint on module: DS1647
Channels		8 galvanically isolated digital outputs
Software		▪ From ConfigurationDesk 1.2.1 (on dSPACE Release 5.4) up to ConfigurationDesk 3.0 (on dSPACE Release 6.3) with specific plug-in software ▪ ConfigurationDesk 3.0.1 (on dSPACE Release 6.4) or later
Diagnostics		Overheat
HIGH-level output voltage	@ $I_{high\text{-}level}$= 0.1 mA	min. 4.3 V; typ. 4.46 V
	@ $I_{high\text{-}level}$= 10 mA	min. 3.8 V; typ. 3.96 V
	@ $I_{high\text{-}level}$= 20 mA	min. 3.5 V; typ. 3.66 V
LOW-level output voltage	@ $I_{low\text{-}level}$= -0.1 mA	typ. 0.09 V; max. 0.1 V
	@ $I_{low\text{-}level}$= -10 mA	typ. 0.45 V; max. 0.5 V
	@ $I_{low\text{-}level}$= -20 mA	typ. 0.55 V; max. 0.6 V
	@ $I_{low\text{-}level}$= -50 mA	typ. 0.9 V; max. 1 V

Parameter		Specification [1]
Output current (per channel)	High	max. 28 mA
	Low	max. -78 mA
Propagation delay rising edge	Open load	typ. 490 ns
	R_L = 1.5 kΩ ‖ C_L = 330 pF	typ. 560 ns
Propagation delay falling edge	Open load	typ. 490 ns
	R_L = 1.5 kΩ ‖ C_L = 330 pF	typ. 540 ns
Rise time 0.8 V / 3.5 V	Open load	typ. 230 ns
Fall time 3.5 V / 0.8 V	Open load	typ. 160 ns
Minimum pulse width	Positive, open load	max. 400 ns
	Negative, open load	max. 400 ns
Inductive load switching, avalanche power	One channel	max. 0.5 W
Protection	Short circuit duration	▪ To ground: typ. ∞ s ▪ To UBAT = 14 V, one channel: typ. ∞ s ▪ To UBAT = 28 V, one channel, $t_{operating}$ = 25 °C: typ. 5 s
	Internal clamping voltage	▪ Positive: min. 42 V; max. 53 V [2] ▪ Negative: min. -42 V
Isolation		Inductive decoupling
Physical size (length x width)		▪ 60 x 31.5 mm (2.36 x 1.24 in.) ▪ Requires one slot

[1] Unless stated otherwise, the specifications are valid only if the dSPACE hardware is correctly powered, switched on, and ready for operation.

[2] Inductive load, maximum current 50 mA

SC-DO 8/2 Configuration Template

Objective

You can use the following template as a master to document the settings of your module.

Identification and location

Enter the following parameters to identify and locate the module unambiguously.

Parameter		Specification	Label Location
Identification	dSPACE number	1647	Top view 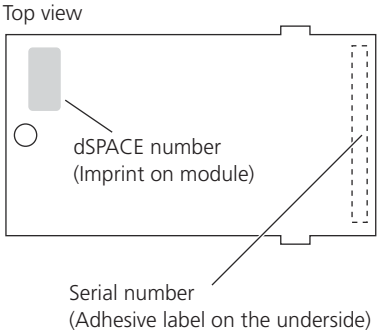
	Serial number		
	Module variant		
Place of installation	System name (unit/stack name)		
	Layer number(s) (unit position in a stack)		
	Slot number (slot on the unit's carrier board)		

Software configuration

Enter the settings for each channel in the table below:

Parameter	CH1	CH2	CH3	CH4	CH5	CH6	CH7	CH8
Channel name								
Signal polarity								
Output driver mode								
Output driver state in idle mode								

SC-SENS 4/1 Module

Short description

The SC-SENS 4/1 module (DS1626) is a sensor supply module which contains 4 differential output channels.

Where to go from here

Information in this section

Module Overview.....254
Information on the module's features, components, and functionality will help you assess its possible uses.

Software Configuration.....256
The SC-SENS 4/1 module provides parameters which are software-configurable via ConfigurationDesk for RapidPro.

Module in Use.....257
You have access to information (i.e., output voltages, temperatures on the circuit board) which the module provides during operation.

Data Sheet.....259
The data sheet summarizes the technical data of the SC-SENS 4/1 module; there is also a template that you can use as a master to document your configuration settings.

Module Overview

Where to go from here

Information in this section

Module Features.....254
Module Components and Functionality.....254

Module Features

Main features

The main features of the module are:

- 4 differential output channels
- Output voltage range: +2 V … +20 V
- Output power: 1.2 W per channel
- Overload protected with temperature sensors
- Common-mode range: up to ±100 V

Software

ConfigurationDesk 1.0 (on dSPACE Release 4.2) or later is required to work with the SC-SENS 4/1 module.

More features

For a complete list of the module's features, refer to SC-SENS 4/1 Data Sheet on page 259.

Module Components and Functionality

Objective

The module's components are shown on the basis of its simplified I/O circuit.

I/O circuit

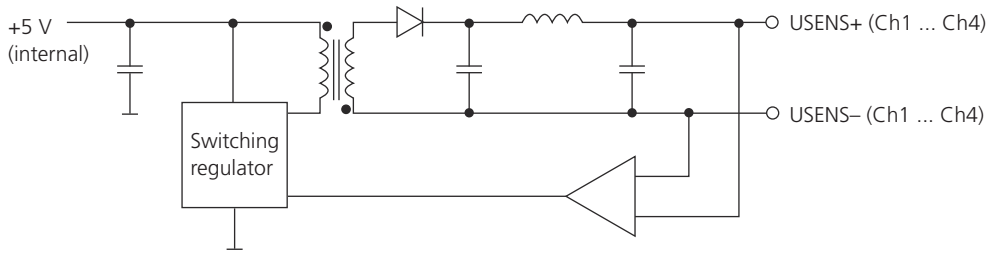

Output behavior

Note

The module's sensor supply output behavior is defined for safety reasons as follows:

- Installed in a single unit: KL15 (switched on via ignition switch) and the ENABLE pin on the rear I/O connector R2 must be connected to get a output signal.
- Installed in a stack with UCB that is connected to a MicroAutoBox/AutoBox: The application must run to get a output signal.
- There is no module output during configuring the RapidPro system via ConfigurationDesk fpr RapidPro.

Software Configuration

Configuration via ConfigurationDesk for RapidPro

Software-configurable parameter

You can configure the following hardware parameter of the SC-SENS 4/1 module on each channel individually:

Parameter	Range/Setting	Factory Default Setting	Description	Valid
Output voltage (2 V … 20 V)	+2 V … +20 V	+5 V	–	Per channel

Tip

Negative output voltages can be obtained by reversing the load's polarity.

Related topics

References

SC-SENS 4/1 Configuration Template..... 261

Module in Use

Objective

During operation you can access status information of the SC-SENS 4/1 module via ConfigurationDesk for RapidPro. The module provides:

- Permanent monitoring of various measurement values
- Diagnostic messages about the status of the module and the status of the connection to sensors

Where to go from here

Information in this section

Monitoring.....257
Diagnostics.....258

Monitoring

Monitored parameters

The SC-SENS 4/1 provides monitoring of the following parameters:

Parameter	Description	Valid
Monitored module output	The actual output voltage of each channel is displayed at a typical scan rate of approx. 200 ms. The following illustration shows the measuring position. 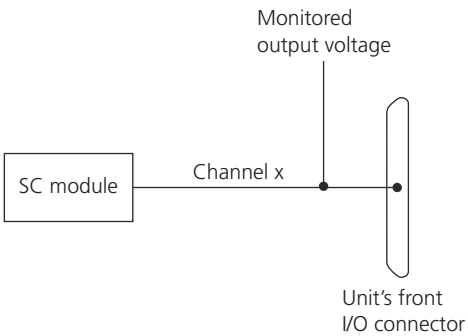	Per channel
Temperature sensor T1 … T4	The temperatures are measured on the module's circuit board at some critical points. They serve for troubleshooting purposes.	For the module

Diagnostics

Diagnostic warnings and diagnostic errors

The diagnostic messages can be divided into warnings and errors.

- Diagnostic warnings occur if a fault, such as "Overvoltage", is detected. Each warning is dropped as soon as the reason for it is removed.
- Diagnostic errors cause the module functions to be disabled (shutdown). If a diagnostic error occurs, you have to remove the source of the error and reset the module's diagnostics via ConfigurationDesk for RapidPro.

Precondition to get diagnostic messages

ConfigurationDesk for RapidPro can receive diagnostic messages about channels sent by the RapidPro modules only if the RapidPro system is in execution mode. For further information, refer to Basics on the Display of Diagnostic Messages (ConfigurationDesk for RapidPro - Guide 🕮).

Possible diagnostic messages

Diagnostic Message		Description	Valid
Warning	Overvoltage	The measured output voltage is more than 1 V above the configured output voltage.	Per channel
	Undervoltage	The measured output voltage is more than 1 V below the configured output voltage.	
	Temperature warning	The temperature of a specific channel is close to the 'Overheat' limit.	
Error	Overheat	The temperature of a specific channel has reached a critical value. This message always occurs together with the diagnostic message Shutdown.	Per channel
	Shutdown	All channels are set to shutdown mode. This means module functions are disabled.	All channels

Data Sheet

Where to go from here

Information in this section

SC-SENS 4/1 Data Sheet.....259
This gives you a complete overview of the module's technical data.

SC-SENS 4/1 Configuration Template.....261
You can copy and/or print out the template and use it as a master to document your configuration settings.

SC-SENS 4/1 Data Sheet

Technical data

Parameter		Specification [1]
Identification		Top view 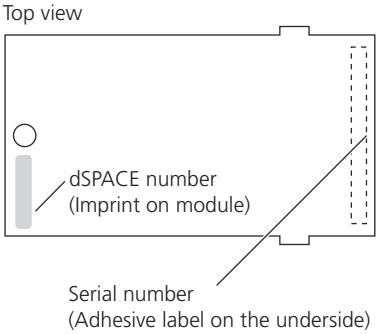 dSPACE number: DS1626
Channels		4 independent differential sensor supply outputs
Software		ConfigurationDesk 1.0 (on dSPACE Release 4.2) or later is required
Diagnostics		Overvoltage, undervoltage, temperature warning, overheat, shutdown
Output voltage (DC)	Voltage range	▪ +2 V … +20 V ▪ Configurable in steps of 5.5 mV ▪ Negative output voltages can be obtained by reversing the load's polarity
	Accuracy [2]	1% (= 200 mV)
	Temperature caused voltage drift	▪ Typ. 1 mV/K

Parameter		Specification [1]
		▪ Max. 2.5 mV/K
	Common mode rejection	50 dB
Output current		▪ Max. 200 mA @ U_{out} = 2 V ▪ Max. 60 mA @ U_{out} = 20 V ▪ Dependencies on operating temperature are shown in Output current diagram on page 261
Output power [3]		1.2 W per channel
Overload power [3]		Max. 2.5 W per channel till overload is detected
Output ripple		Max. 40 mV peak to peak
Efficiency (E = P_{out}/P_{in})		▪ Typ. 70% ▪ Max. 78%
Common mode range		Up to ±100 V
Protection between USENS+ and USENS–	Reverse voltage	Max. +50 V continuous (unit powered on or off)
	Short current [3]	Max. 650 mA (unit powered on or off)
	Overload	All outputs are overload protected using temperature sensors. If an overload situation occurs, diagnostic messages are generated by the software. For their meanings, refer to Possible diagnostic messages on page 258.
Physical size (length x width)		▪ 60 x 31.5 mm (2.36 x 1.24 in.) ▪ Requires one slot

[1] Unless stated otherwise, the specifications are valid only if the dSPACE hardware is correctly powered, switched on, and ready for operation.
[2] Typical value in operating temperature range of –40 … +85 °C (–40 … +185 °F).
[3] Typical value at T_Housing = +25 °C (+77 °F)

Output current diagram

The following illustration shows the maximum output current ($I_{out, max}$) as a function of the output voltage for different operating temperatures.

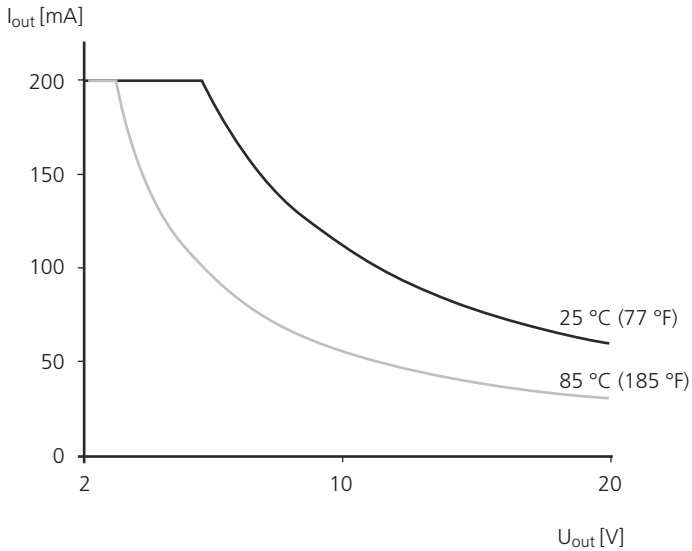

SC-SENS 4/1 Configuration Template

Objective

You can use the following template as a master to document the settings of your module.

Identification and location

Enter the following parameters to identify and locate the module unambiguously.

Parameter		Specification	Label Location
Identification	dSPACE number	1626	Top view 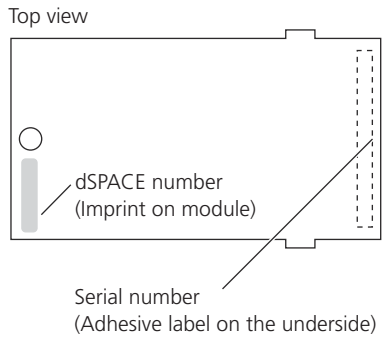
	Serial number		
	Module variant		
Place of installation	System name (unit/stack name)		
	Layer number(s) (unit position in a stack)		
	Slot number		

Parameter		Specification	Label Location
	(slot on the unit's carrier board)		

Software configuration

Enter the settings for each channel in the table below:

Parameter	CH1	CH2	CH3	CH4
Channel name				
Output voltage				

SC-CCDI 6/1 Module

Short description

The SC-CCDI 6/1 module (DS1637) is an input module especially designed to condition the signals of camshaft and crankshaft sensors.

Where to go from here

Information in this section

Module Overview.....264
Information on the module's features, components, and functionality will help you assess its possible uses.

Software Configuration.....268
The SC-CCDI 6/1 module provides parameters which are software-configurable via ConfigurationDesk for RapidPro.

Hardware Configuration.....270
The SC-CCDI 6/1 module provides user-configurable circuits to add electronic components (resistors, capacitors) to the input circuit of the module.

Connection to Sensors.....277
You have to note points regarding the cable harness if you connect sensors to the module.

Module in Use.....278
You have access to information (i.e., output voltages) which the module provides during operation.

Data Sheet.....279
The data sheet summarizes the technical data of the SC-CCDI 6/1 module; there is also a template that you can use as a master to document your configuration settings.

Module Overview

Where to go from here

Information in this section

Module Features.....264
Module Components and Functionality.....265

Module Features

Main features

The main features of the module are:

- Four camshaft input channels
  - Floating digital inputs with one common isolated ground (D_GND)
  - Input voltage range: –55 V … +55 V
  - Threshold voltage range: –39.5 V … +39.5 V (lower and upper threshold software-configurable)
  - The channels may be also used as digital input channels, such as the channels of the SC-DI 8/1 module
- Two crankshaft input channels
  - Floating differential inputs
  - Connection of rotational speed sensors with open load voltage up to ±200 V (±60 V DC)
  - The channels may be also used, wherever you want to detect the zero crossing points of an analog signal, i.e., for engine control
- Input circuits are hardware-configurable
- TTL output voltage level (all channels)

Software

ConfigurationDesk 1.0 (on dSPACE Release 4.2) or later is required to work with the SC-CCDI 6/1 module.

More features

For a complete list of the module's features, refer to SC-CCDI 6/1 Data Sheet on page 279.

Module Components and Functionality

Objective

The module's components are shown on the basis of its simplified I/O circuit. More detailed descriptions of the components are given if their functions are not clear from the I/O circuit.

I/O circuit

Camshaft input channel

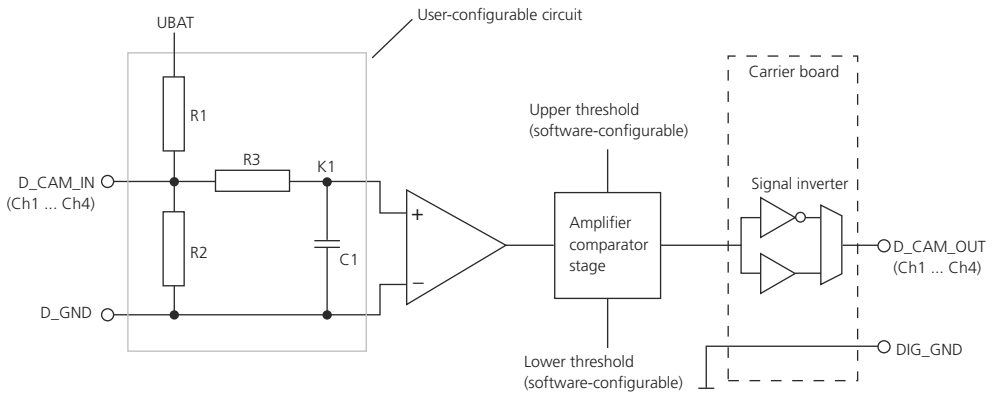

Crankshaft input channel

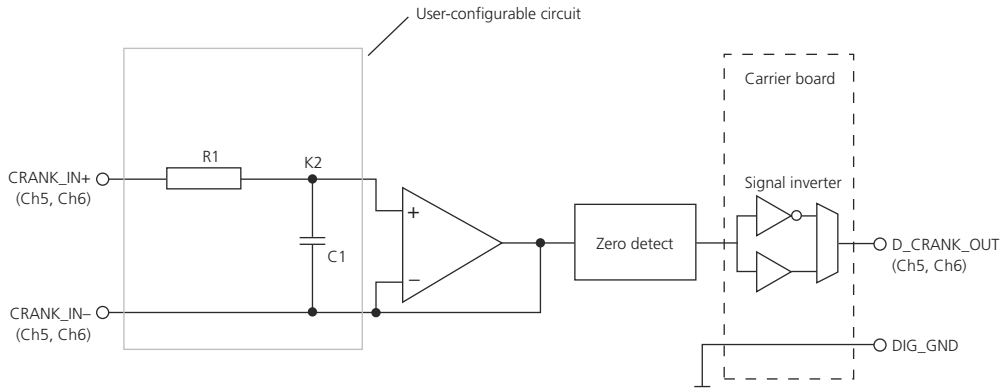

User-configurable circuit

Additional components (resistors, capacitors) can be connected to each input to adapt it to different sensor types. For example, you can add pull-up or pull-down configuration to the camshaft inputs. For details, refer to Overview of User-Configurable Circuit on page 270.

Amplifier comparator stage

You can configure the lower and the upper threshold of the amplifier comparator stage for the camshaft input channels (CH1 … CH4) via ConfigurationDesk. For details, refer to Configuration via ConfigurationDesk for RapidPro on page 268.

Signal inverter

The logic level of the outputs can be inverted by signal inverters, which are integrated on the unit's carrier board. You can configure the signal polarity via ConfigurationDesk. For details, refer to Configuration via ConfigurationDesk for RapidPro on page 268.

Zero detect

The analog input signals of the crankshaft input channels (CH5, CH6) are converted into digital signals by detecting the zero crossing points of the analog signals. The illustration below shows an example of an input and the corresponding output signal.

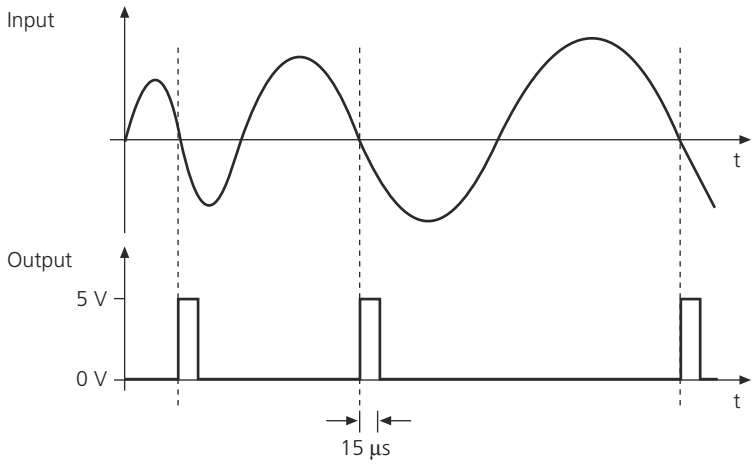

D_GND

D_GND (isolated ground) of different signal conditioning modules (same type or different type) may not provide the same ground potential. Do not use D_GND of other modules for ground connection.

Note

You *must* connect the module's ground pins, which are available on the RapidPro unit's front connectors, to the ground of the RapidPro system. Unconnected ground pins can cause the module to malfunction.
For details on grounding, refer to Evaluating Star Point Grounding Schemes (RapidPro System Hardware Installation Guide 🕮).

Related topics

Basics

Evaluating Star Point Grounding Schemes (RapidPro System Hardware Installation Guide 🕮)

References

Overview of User-Configurable Circuit..... 270

Software Configuration

Configuration via ConfigurationDesk for RapidPro

Objective

Various parameters of the module are configurable via ConfigurationDesk for RapidPro. In addition, the software provides module-specific edit fields to document the values of the soldered components of the user-configurable circuit. This hardware information is stored on the module.

Software-configurable parameters

Parameter	Range/Setting	Factory Default Setting	Description	Valid
Upper threshold voltage	-39.5 V … +39.5 V	2 V	The value must be greater than or equal to the lower threshold voltage.	Per camshaft channel (CH1 … CH4)
Lower threshold voltage	-39.5 V … +39.5 V	0.8 V	The value must be less than or equal to the upper threshold voltage.	
Signal polarity	▪ Non-inverted ▪ Inverted	Non-inverted	Polarity of the output signal	All channels

Note

If you use the RTI RapidPro Control Unit Blockset, you must use the blockset to invert camshaft and crankshaft signals. You must not invert the signals via ConfigurationDesk for RapidPro.

Storage of the signal polarity settings

The signal polarity settings are stored on the hardware as follows:

- *Using ConfigurationDesk 1.1 and later:*

  The signal polarity settings are stored on the module. If you mount the SC-CCDI 6/1 module in another unit, the settings you made previously are still set.
- *Using ConfigurationDesk 1.0:*

  The signal polarity settings are stored on the unit's carrier board. They do not change if you replace the SC-CCDI 6/1 module by another SC-CCDI 6/1 module.

Hardware information

You can enter information about the user-configurable circuit on the module-specific properties dialog. The information is stored on the module as reminder and does not affect the channel's behavior.

The following table shows the relation between the parameter names used in ConfigurationDesk for RapidPro and the names of the components used in the user-configurable circuit:

Parameter in ConfigurationDesk for RapidPro	Component in the Input Circuit	Description	Valid
R pull-up	R1	–	Per camshaft channel (CH1 … CH4)
R pull-down	R2		
Low-pass filter frequency	R1 and C1		Per channel

If the components were soldered by dSPACE according to your order, the specific values are already stored.

For a detailed circuit illustration, refer to Overview of User-Configurable Circuit on page 270.

Related topics

References

Configuration Example: Configuring a Pull-Up Resistor for a Camshaft Channel..... 273
Configuration Example: Configuring the Low-Pass Filter..... 274
Overview of User-Configurable Circuit..... 270
SC-CCDI 6/1 Configuration Template..... 280
Solder Pads and Component Requirements..... 272

Hardware Configuration

Objective

Additional electronic components can be added to the input of each channel to adapt it to different sensor types. The module provides solder pads where you can solder components like resistors, or capacitors in user-configurable circuits.

Where to go from here

Information in this section

Overview of User-Configurable Circuit.....270
Solder Pads and Component Requirements.....272
Configuration Example: Configuring a Pull-Up Resistor for a Camshaft Channel.....273
Configuration Example: Configuring the Low-Pass Filter.....274

Overview of User-Configurable Circuit

Objective

Each channel of the module provides a user-configurable circuit which can be used to adapt the channel input to different sensor types.

Components of the user-configurable circuits

The following illustration shows the user-configurable circuits of the SC-CCDI 6/1. Up to four components per channel can be soldered to configure the input circuit.

Camshaft input channel

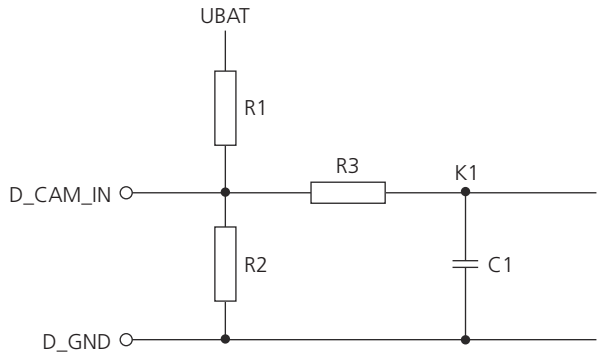

Crankshaft input channel

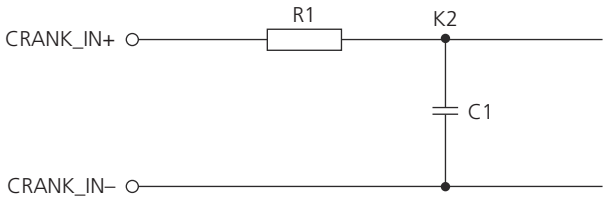

Factory default settings

The settings depend on your order as follows:

- If you did not specify components in your order, the user-configurable circuits are equipped with:
  - Camshaft input channel R3 = 0 Ω
  - Crankshaft input channel R1 = 0 Ω
- If you specified components in your order, these were soldered by dSPACE.

Hardware information in ConfigurationDesk for RapidPro

ConfigurationDesk for RapidPro provides a module-specific properties dialog where you can edit the values of the soldered components as reminders for each channel on the module.

For the relevant parameters, refer to Hardware information on page 269.

Related topics

Basics

Changing the Hardware Configuration of SC/PS Modules (RapidPro System Hardware Installation Guide 🕮)
Changing the Installation of SC/PS/COM Modules (RapidPro System Hardware Installation Guide 🕮)

References

Configuration via ConfigurationDesk for RapidPro..... 268
SC-CCDI 6/1 Configuration Template..... 280

Solder Pads and Component Requirements

Objective

The SC-CCDI 6/1 module provides solder pads to add components on the module's circuit board.

Positions of solder pads

The following illustration shows the topside of the SC-CCDI 6/1 (hardware revision DS1637-04), containing the positions of the solder pads for the user-configurable circuits. The signals available at the pads are also indicated.

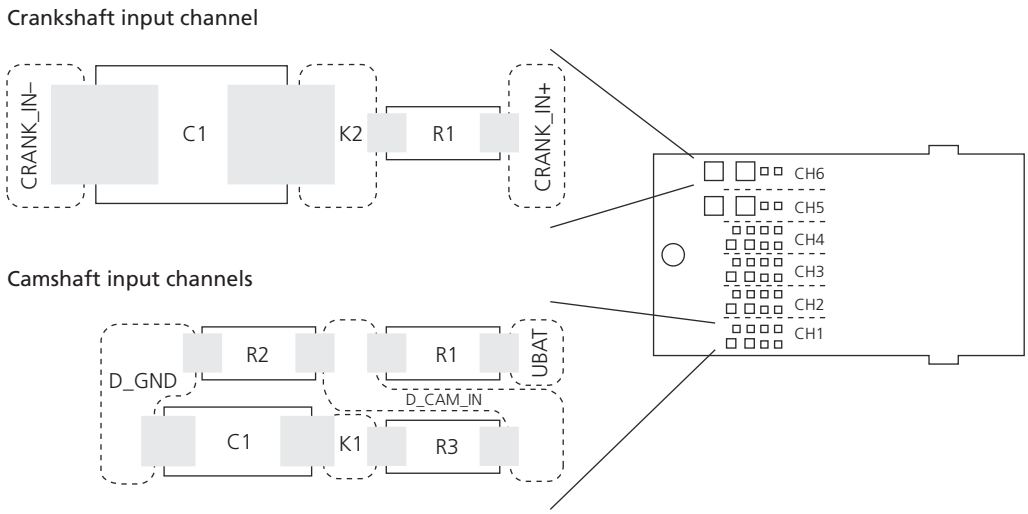

Note

The locations and functionalities of the solder pads are basically the same for all hardware revisions. Only the package type of the SMDs can change (see table below).

Component requirements

The circuit board is designed for soldering standard surface mounted devices (SMD):

Hardware Revision	Channel	Component	Package Type
Up to DS1637-04	Crankshaft input channels (Ch5 … Ch6)	R1	0805
		C1	1206 or 1812
	Camshaft input channels (Ch1 … Ch4)	R1, R2, R3	0805
		C1	0805 or 1206
DS1637-05	Crankshaft input channels (Ch5 … Ch6)	R1	0805 or 1206
		C1	1206 or 1812
	Camshaft input channels (Ch1 … Ch4)	R1, R2, R3	0805 or 1206
		C1	0805 or 1206

Related topics

Basics

Changing the Hardware Configuration of SC/PS Modules (RapidPro System Hardware Installation Guide 🕮)
Changing the Installation of SC/PS/COM Modules (RapidPro System Hardware Installation Guide 🕮)

References

Configuration via ConfigurationDesk for RapidPro..... 268
SC-CCDI 6/1 Configuration Template..... 280

Configuration Example: Configuring a Pull-Up Resistor for a Camshaft Channel

Objective

To define the input signal of a camshaft channel (CH1 … CH4), for example, for a connected sensor with three-state output, solder a pull-up resistor to the user-configurable circuit.

Assignment of the components

The illustration below shows the components and their assignment:

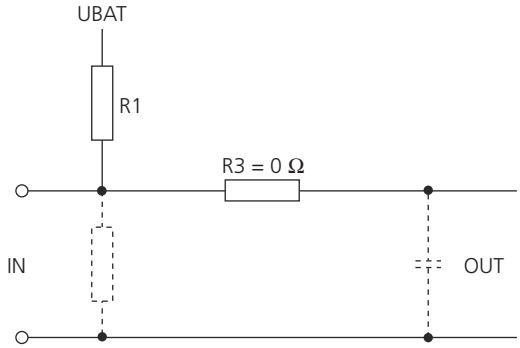

Note

The output stage of the connected device must be compatible to UBAT signals, because the pull-up resistor R1 is connected to UBAT.

Example values

R1 is typically in the range 1 kΩ … 10 kΩ. You have to choose the resistor value depending on the characteristics of the output stage of the connected sensor.

The R3 component must be an 0 Ω resistor in this configuration example.

Related topics

Basics

Changing the Hardware Configuration of SC/PS Modules (RapidPro System Hardware Installation Guide 🕮)
Changing the Installation of SC/PS/COM Modules (RapidPro System Hardware Installation Guide 🕮)

References

Configuration via ConfigurationDesk for RapidPro..... 268
SC-CCDI 6/1 Configuration Template..... 280

Configuration Example: Configuring the Low-Pass Filter

Objective

You can equip each channel with a first-order low-pass filter. The following example describes the configuring of the low-pass filter for a camshaft channel. You can configure the –3 dB cutoff frequency for each filter by soldering resistors and capacitors.

Calculating the cutoff frequency

The cutoff frequency fg of the low-pass filters is easy to calculate with the simplified formula below.

$$fg = \frac{1}{2 \times \pi \times R3 \times C1}$$

Assignment of the components

The illustration below shows the components and their assignment:

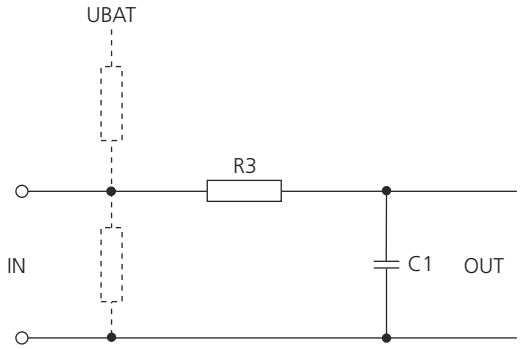

Note

The resistor R3 must not exceed 5 kΩ.

Example values

The following table shows standardized component values for different cutoff frequencies:

Cutoff Frequency fg	Resistor R3	Capacitor C1
100 Hz	1.6 kΩ	1 µF
200 Hz	2.4 kΩ	330 nF
500 Hz	3.9 kΩ	82 nF
1 kHz	1.6 kΩ	100 nF
2 kHz	2.4 kΩ	33 nF
10 kHz	1.6 kΩ	10 nF
20 kHz	2.4 kΩ	3.3 nF
50 kHz	3.9 kΩ	820 pF
100 kHz	1.6 kΩ	1 nF
200 kHz	2.4 kΩ	330 pF

Related topics

Basics

Changing the Hardware Configuration of SC/PS Modules (RapidPro System Hardware Installation Guide 🕮)
Changing the Installation of SC/PS/COM Modules (RapidPro System Hardware Installation Guide 🕮)

References

Configuration via ConfigurationDesk for RapidPro..... 268
SC-CCDI 6/1 Configuration Template..... 280

Connection to Sensors

Notes on Connecting Sensors

Objective

If you use the SC-CCDI 6/1 module in a stack with UCB, the RapidPro system can freeze if the microprocessor module of the Control Unit is overloaded with interrupt tasks. This can be determined by a faulty connection while an application is executing your RapidPro system.

Sources of defects and remedies

Source of Defect	Remedy	Valid For
There is a break in a cable in the cable harness to the connected sensor.	Stop the application via ControlDesk, power off the RapidPro hardware, and check the cable harness.	All channels
There is no sensor connected.	Connect a sensor.	
The cable (cable harness) is too long.	The cable harness should be as short as possible and must not be longer than 20 m (65.6 ft.).	Crankshaft channels = Ch5 … Ch6
The hysteresis of digital signals is not sufficient.	The hysteresis of digital signals should be in minimum 500 mV.	Camshaft channels = Ch1 … Ch4
There are module inputs not connected.	Unused inputs of the module must be equipped with pull-ups (R1 and R3) or pull-downs (R2 and R3).	

Module in Use

Objective

During operation you can access status information of the SC-CCDI 6/1 module via ConfigurationDesk for RapidPro, such as permanent monitoring of various measurement values.

Monitoring

Monitored parameter

The SC-CCDI 6/1 provides monitoring the following parameter:

Parameter	Description	Valid
Signal Monitoring	The current logic level of each channel is displayed at a typical scan rate of approx. 200 ms. Thus, you can measure only DC signals correctly. The following illustration shows the measuring position. 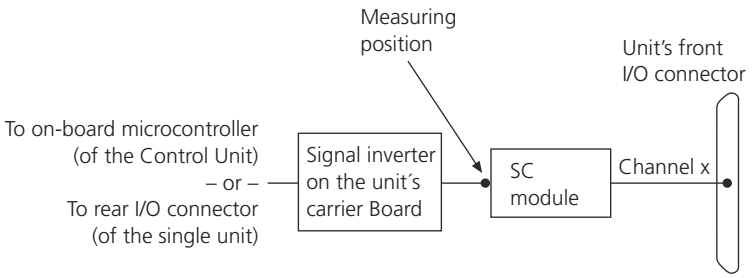	Per channel

Data Sheet

Where to go from here

Information in this section

SC-CCDI 6/1 Data Sheet.....279
This gives you a complete overview of the module's technical data.

SC-CCDI 6/1 Configuration Template.....280
You can copy and/or print out the template and use it as a master to document your configuration settings.

SC-CCDI 6/1 Data Sheet

Technical data

Parameter		**Specification** [1)]
Identification		Top view 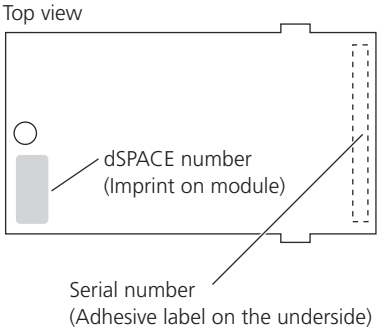 Imprint on module: DS1637
Channels		▪ 4 camshaft input channels ▪ 2 crankshaft input channels
Software		ConfigurationDesk 1.0 (on dSPACE Release 4.2) or later is required
Diagnostics		Not available
Input voltage range	Camshaft channels	–55 V … +55 V
	Crankshaft channels	–200 V … +200 V (±60 V DC)
Input frequency	Camshaft channels	Max. 1 MHz at TTL Level
	Crankshaft channels	Max. 30 kHz

Parameter		Specification [1]
Input impedance	Camshaft channels	Min. 170 kΩ
	Crankshaft channels	Differential, typ. 67 kΩ
		Common mode, typ. 67 kΩ
Input circuit		Additional components (resistors, capacitors) can be connected to each channel to adapt the input to different sensor types.
Bandwidth		5 MHz
Threshold voltage range [2]		▪ –39.5 V … +39.5 V ▪ Lower and upper thresholds software-configurable
Threshold voltage accuracy [2]		1% ±100 mV (for R3 = 0 Ω)
Output voltage	Camshaft channels	TTL output voltage level
	Crankshaft channels	TTL output voltage level (Pulsewidth = 10 µs)
Output current		24 mA
Propagation delay	Camshaft channels	Low to high, typ. 110 ns
		High to low, typ. 100 ns
	Crankshaft channels	Zero detection, typ. 500 ns
Rise time	Camshaft channels	Typ. 36 ns
	Crankshaft channels	Typ. 53 ns
Fall time	Camshaft channels	Typ. 32 ns
	Crankshaft channels	Typ. 49 ns
Overvoltage protection	Camshaft channels	Up to ±150 V continuous (unit powered on or off)
	Crankshaft channels	Up to ±500 V for 100 µs (unit powered on or off)
Physical size (length x width)		▪ 60 x 31.5 mm (2.36 x 1.24 in.) ▪ Requires one slot

[1] Unless stated otherwise, the specifications are valid only if the dSPACE hardware is correctly powered, switched on, and ready for operation.
[2] Valid only for the camshaft channels.

SC-CCDI 6/1 Configuration Template

Objective

You can use the following template to document the settings of your module.

Identification and location

Enter the following parameters to identify and locate the module unambiguously.

Parameter		Specification	Label Location
Identification	dSPACE number	1637	Top view 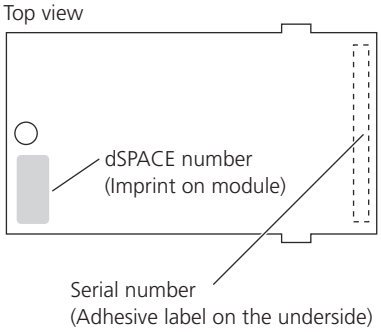
	Serial number		
	Module variant		
Place of installation	System name (unit/stack name)		
	Layer number(s) (unit position in a stack)		
	Slot number (slot on the unit's carrier board)		

Software configuration

Enter the settings for each channel in the table below:

Parameter	CH1	CH2	CH3	CH4	CH5	CH6
Channel name						
Upper threshold voltage					Not available.	
Lower threshold voltage						
Signal polarity						

User-configurable circuit

Enter the settings for each channel in the table below:

Parameter	CH1	CH2	CH3	CH4	CH5	CH6
Channel name						

Parameter			CH1	CH2	CH3	CH4	CH5	CH6
UBAT								
Camshaft input channel	R1	R pull-up [1]					Not available	
	R2	R pull-down [1]						
	R3	Low-pass filter frequency [1]						
	C1							
Crankshaft input channel	R1	Low-pass filter frequency [1]	Not available					
	C1							
Input circuit			Camshaft input channel 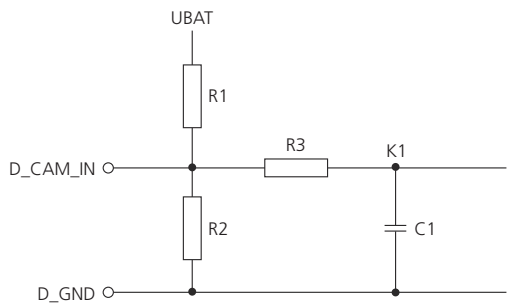 Crankshaft input channel 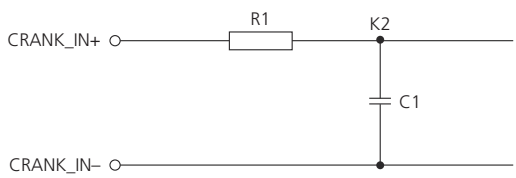					

Parameter	CH1	CH2	CH3	CH4	CH5	CH6
Solder pads	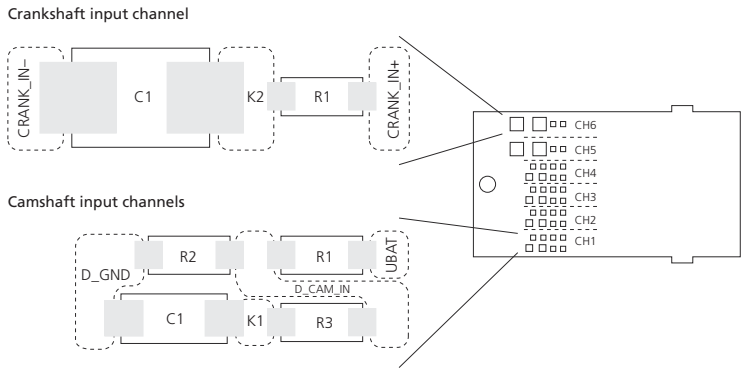 (Hardware revision DS1637-04)					
Package type	Hardware revision DS1637-04		Crankshaft input channels ▪ R1 = 0805 SMD ▪ C1 = 1206 SMD or 1812 SMD		Camshaft input channels ▪ R1, R2, R3 = 0805 SMD ▪ C1 = 0805 SMD or 1206 SMD	
	Hardware revision DS1637-05		Crankshaft input channels ▪ R1 = 0805 SMD or 1206 SMD ▪ C1 = 1206 SMD or 1812 SMD		Camshaft input channels ▪ R1, R2, R3 = 0805 SMD or 1206 SMD ▪ C1 = 0805 SMD or 1206 SMD	

[1] Parameter in ConfigurationDesk for RapidPro

SC-EGOS 2/1 Module

Short description

The SC-EGOS 2/1 module (DS1634) is a two channel *exhaust gas oxygen sensor* (EGOS) module for connecting LSU4.2, LSU4.9, or LSU ADV (hardware revision DS1634-06 or later) Bosch lambda probes.

Required knowledge

Note

- Complete knowledge on the connected lambda probes is recommended for working with the SC-EGOS 2/1 module. Refer to the technical documentation of the specific lambda probe.
- The signal terms in this section correspond to the signal terms of the supported lambda probes and the Bosch CJ125 ICs. The Bosch CJ125 ICs are part of the module's hardware and control the connected lambda probes.

Where to go from here

Information in this section

Module Overview.....287
Information on the module's features, components, and functionality will help you assess its possible uses.

Software Configuration.....290
The SC-EGOS 2/1 module provides parameters which are software-configurable via ConfigurationDesk for RapidPro.

Connection to Lambda Probes.....292
You have to note points regarding the connection of probes to the module and get information on calculating values for analysis.

Module in Use.....296
You have access to information (i.e., output voltages, temperatures on the circuit board) which the module provides during operation.

Data Sheet 298
The data sheet summarizes the technical data of the SC-EGOS 2/1 module; there is also a template that you can use as a master to document your configuration settings.

Module Overview

Where to go from here

Information in this section

Module Features.....287
Module Components and Functionality.....287

Module Features

Main features

The main features of the module are:

- It is based on two Bosch CJ125 ICs which are used to control the connected lambda probes.
- It provides two channels to connect either LSU4.2, LSU4.9, or LSU ADV (hardware revision DS1634-06 or later) Bosch lambda probes.

  It depends on your order which lambda probe type you can connect to the SC-EGOS 2/1 module. If you want to change to another lambda probe type, the SC-EGOS 2/1 must be modified by dSPACE.
- Lambda measurement range: 0.65 … inf and 0.75 … inf (software-configurable).
- Pump reference current: 0 … 150 µA (software-configurable in 10 µA steps).

Software

ConfigurationDesk 1.1 (on dSPACE Release 5.0) is required to work with the SC-EGOS 2/1 module.

More features

For a complete list of the module's features, refer to SC-EGOS 2/1 Data Sheet on page 298.

Module Components and Functionality

Objective

The module's components are shown on the basis of its simplified I/O circuit. More detailed descriptions of the components are given if their functions are not clear from the I/O circuit.

I/O circuit

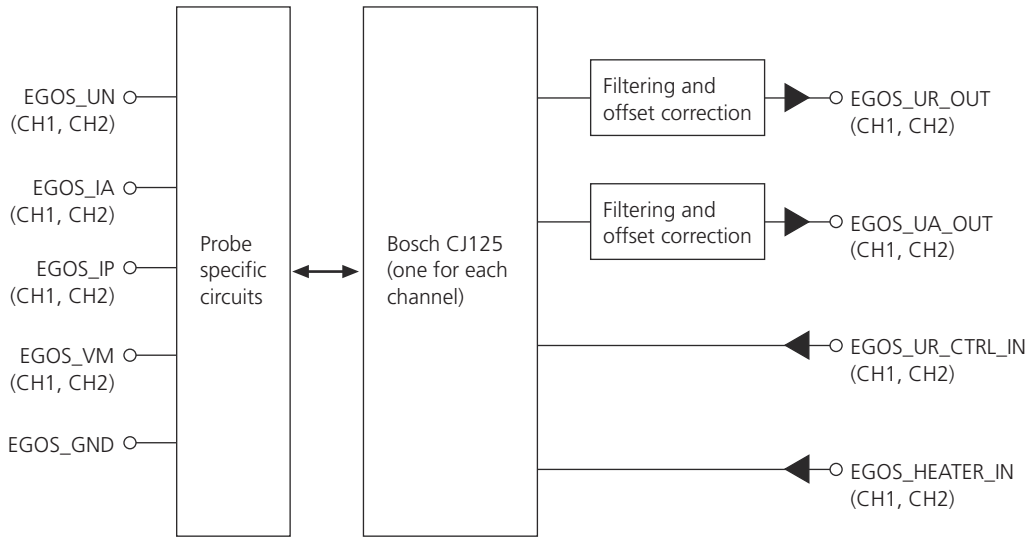

The SC-EGOS 2/1 module is based on two CJ125 ICs from Bosch.

EGOS signals

The following table lists the available signals:

Signal	Description
EGOS_UN	Nernst voltage (lambda probe)
EGOS_IA [1)]	Trim resistor (lambda probe)
EGOS_IP	Pump current (lambda probe)
EGOS_VM	Virtual ground (lambda probe)
EGOS_GND	Module ground **Note** You *must* connect the EGOS_GND pin, which is available on the RapidPro unit's front connector, to the ground of the RapidPro system. An unconnected ground pin can cause the module to malfunction.
EGOS_UR_OUT	Ri-measurement output voltage: The output voltage is a linear function of the internal resistance of the connected lambda probe. For information on calculating the internal resistance Ri, refer to Calculation of Ri in relation to EGOS_UR_OUT on page 294.

Signal	Description
EGOS_UA_OUT	Lambda-measurement output voltage: The output voltage is a linear function of the pump current. **Note** For information on the connection between λ and the pump current IP, refer to the technical documentation of the specific lambda probe. For information on calculating the pump current, refer to Calculation of IP in relation to EGOS_UA_OUT on page 293.
EGOS_UR_CTRL_IN	Ri measurement control input: ▪ Low level = Ri measurement on ▪ High level = Ri measurement off The signal quality of UA is improved if the Ri measurement is switched off.
EGOS_HEATER_IN	Heater signal input: The CJ125 must know whether the heater of the lambda probe is on. This is to improve measurement quality. ▪ Low level = heater on ▪ High level = heater off **Note** The heater of a connected lambda probe is not driven by the SC-EGOS 2/1 module. For details, refer to Notes on Connecting Lambda Probes on page 292.

[1] LSU ADV: The LSU ADV lambda probe does not provide a corresponding connection. You have to leave the EGOS_IA unconnected.

Software Configuration

Configuration via ConfigurationDesk for RapidPro

Objective

Various parameters of the module are configurable via ConfigurationDesk for RapidPro.

Software-configurable parameters

Note

Complete knowledge on the connected lambda probes is recommended for working with the SC-EGOS 2/1 module. Refer to the technical documentation of the specific lambda probe.

Parameter	Range/ Setting	Factory Default Setting	Description	Valid
Lambda measurement range	▪ 0.65 … inf ▪ 0.75 … inf	0.75 … inf	Restricting the measurement range raises the accuracy of the measurement.	For each channel
Pump reference current	0 … 150 µA (configurable in 10 µA steps)	0 µA	You can specify the current on the internal resistance of the connected lambda probe. Change this parameter only according to the technical specifications of the lambda probe. ***NOTICE*** **Setting the pump reference current unequal 0 A can damage the connected lambda probe.** To avoid damage, the selected reference current must not exceed the maximum current specified in the probe's documentation.	For each channel
Short circuit detection of UN to UBAT	▪ Enabled ▪ Disabled	Disabled	Detection is disabled by default to suppress the diagnostic message ‘Short to UBAT: UN, IA, IP,	For each channel

Parameter	Range/ Setting	Factory Default Setting	Description	Valid
			VM' if there is a short circuit between UN and UBAT. If there is a short circuit between UBAT and IA, IP, or VM, the message is displayed even if the detection is disabled. **Note** If detection is enabled the diagnostic message can occur without a reason in ConfigurationDesk for RapidPro. This happens if you set the pump reference current (see above) to ≠ 0 A and the internal resistance Ri of the lambda probe is high (cold probe).	

Related topics

References

SC-EGOS 2/1 Configuration Template..... 299

Connection to Lambda Probes

Where to go from here

Information in this section

Notes on Connecting Lambda Probes.....292

Determining the Pump Current of a Lambda Probe.....293
You can calculate the pump current IP, which allows you to draw conclusions of λ.

Determining the Internal Resistance of a Lambda Probe.....294
You can calculate the internal resistance Ri, which gives an indication of the probe's temperature.

Notes on Connecting Lambda Probes

Objective

Depending on your hardware assembly (SC-EGOS 2/1 installed in a single SC Unit – SC-EGOS 2/1 installed in a Control Unit or stack with UCB), you must note the following points when using lambda probes.

For detailed notes and tips, there is a dSPACE application note which can be provided on request.

Installed in a single SC Unit

If you want to use a lambda probe with an SC-EGOS 2/1 module installed in a single SC Unit, you also need a Power Unit with a low-side driver module PS-LSD 6/1 to drive the heater of the probe.

The following illustration gives a simplified connection example. The signal terms correspond to the signal terms of the supported lambda probes and the Bosch CJ125 ICs. The Bosch CJ125 ICs are part of the module's hardware and control the connected lambda probes.

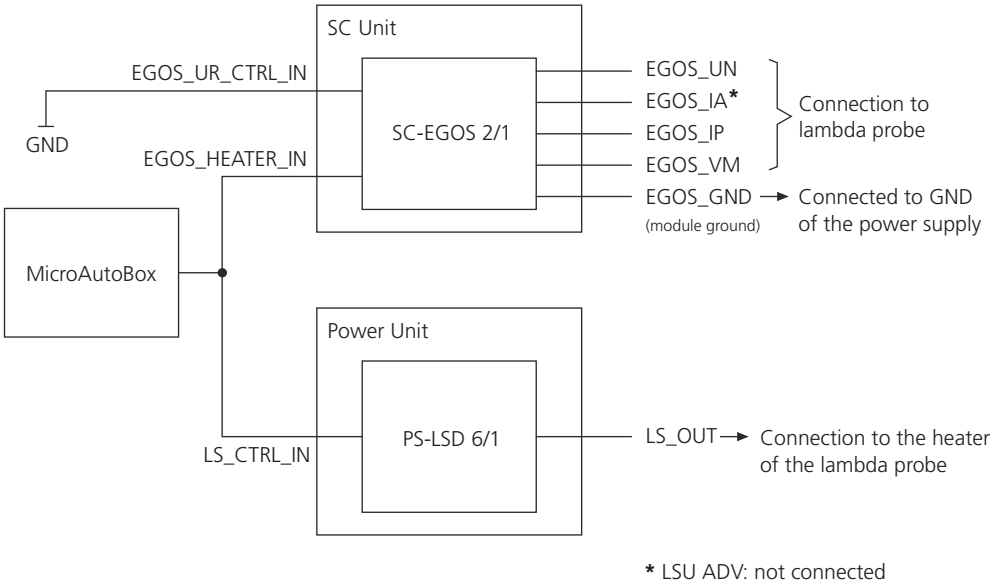

Note

You must connect the EGOS_GND pin to the ground of the RapidPro system to avoid module malfunction.

Installed in a stack with UCB

A stack with UCB must be at least consist of a Control and a Power Unit to use lambda probes with an installed SC-EGOS 2/1 module. In the Power Unit a low-side driver module (PS-LSD 6/1) must be installed to drive the heater of the probe. Additionally you need a specific routing code for the RapidPro system. Contact dSPACE for details.

Determining the Pump Current of a Lambda Probe

Objective

To draw conclusions about λ, you can determine the pump current IP of a connected lambda probe with the output signal EGOS_UA_OUT.

Calculation of IP in relation to EGOS_UA_OUT

The output signal EGOS_UA_OUT lets you determine the pump current IP of the lambda probe. You can calculate IP in relation to EGOS_UA_OUT with the formulas in the table:

Lambda Probe	Lambda measurement range 0.65 ... inf	Lambda measurement range 0.75 ... inf
LSU4.2/ LSU4.9	$IP[A] = \frac{EGOS_UA_OUT[V] - 1.5}{496}$	$IP[A] = \frac{EGOS_UA_OUT[V] - 1.5}{1052.3}$
LSU ADV - gasoline application	$IP[A] = \frac{EGOS_UA_OUT[V] - 1.5}{572}$	$IP[A] = \frac{EGOS_UA_OUT[V] - 1.5}{1215.5}$
LSU ADV - diesel application	$IP[A] = \frac{EGOS_UA_OUT[V] - 1.5}{1680}$	$IP[A] = \frac{EGOS_UA_OUT[V] - 1.5}{8670}$

The result of the calculation provides information on λ:

- IP = 0 mA (EGOS_UA_OUT = 1.5 V) => λ = 1
- IP < 0 mA (EGOS_UA_OUT < 1.5 V) => λ < 1 (rich exhaust gas)
- IP > 0 mA (EGOS_UA_OUT > 1.5 V) => λ > 1 (lean exhaust gas).

Note

For detailed information on the connection between λ and the pump current IP, refer to the technical documentation of the specific lambda probe.

Monitoring EGOS_UA_OUT

The SC-EGOS 2/1 module lets you monitor the output voltage EGOS_UA_OUT for each channel. For further information, refer to Monitoring on page 296.

Determining the Internal Resistance of a Lambda Probe

Objective

The temperature of a lambda probe can be deduced from its internal resistance. For this you can calculate the internal resistance Ri.

Calculation of Ri in relation to EGOS_UR_OUT

The output signal EGOS_UR_OUT lets you determine the lambda probe's internal resistance Ri, which also depends on the probe's temperature. You can calculate the Ri in relation to EGOS_UR_OUT.

- For LSU4.2:

$$Ri[Ohm] = \frac{EGOS_UR_OUT[V] - 0.294}{0.00775}$$

- For LSU4.9:

$$Ri[Ohm] = \frac{EGOS_UR_OUT[V] - 0.294}{0.00245}$$

- For LSU ADV:

$$Ri\,[Ohm] = \frac{EGOS_UR_OUT\,[V] - 0.294}{0.001379}$$

Note

For detailed information on the connection between Ri and the probe's temperature, refer to the technical documentation of the specific probe.

Monitoring EGOS_UR_OUT

The SC-EGOS 2/1 module lets you monitor the output voltage EGOS_UR_OUT for each channel. For further information, refer to Monitoring on page 296.

Module in Use

Objective

During operation you can access status information of the SC-EGOS 2/1 module via ConfigurationDesk for RapidPro. The module provides:

- Permanent monitoring of the channel outputs of the module
- Diagnostic messages about the status of the module and the status of the connection to external devices

Where to go from here

Information in this section

Monitoring.....296
Diagnostics.....296

Monitoring

Monitored parameters

The SC-EGOS 2/1 lets you monitor the following parameters:

Parameter	Description	Valid
System Monitoring	The current voltage of the selected signal is displayed at a typical sampling rate of approx. 200 ms. The following illustration shows the measurement position. 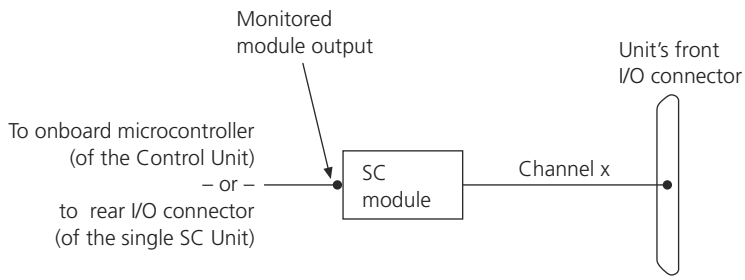	For each channel

Diagnostics

Diagnostic warnings and diagnostic errors

The diagnostic messages can be divided into warnings and errors.

- Diagnostic warnings occur if a fault is detected. Each warning is dropped as soon as the reason for it is removed.

- Diagnostic errors cause the module functions to be disabled (shutdown). If a diagnostic error occurs, you have to remove the source of the error and reset the module's diagnostics via ConfigurationDesk for RapidPro.

Precondition to get diagnostic messages

ConfigurationDesk for RapidPro can receive diagnostic messages about channels sent by the RapidPro modules only if the RapidPro system is in execution mode. For further information, refer to Basics on the Display of Diagnostic Messages (ConfigurationDesk for RapidPro - Guide 🕮).

Possible diagnostic messages

Diagnostic Message		Description	Valid
Warning	–	The SC-EGOS 2/1 module does not provide diagnostic warnings.	–
Error	Short to GND: UN, VM	The message occurs if a short circuit between the EGOS_UN pin and GND, or the EGOS_VM pin and GND is detected. [1]	Per channel
	Short to GND: IA, IP [2]	The message occurs if a short circuit between the EGOS_IA pin and GND, or the EGOS_IP pin and GND, is detected. [1]	
	Short to UBAT: UN, IA, IP, VM [2]	The message occurs if a short circuit between UBAT and the EGOS_UN, EGOS_IA, EGOS_IP, or EGOS_VM pin is detected. [1]	
	Low voltage at UB	Low voltage detection of UBAT. [1] At least one of the module's CJ125 ICs is not properly connected to UBAT. The message occurs in either of the following cases: ▪ The module's hardware is damaged ▪ The module's EGOS_GND pin is not connected to the ground of the power supply	All channels
	Shutdown	If one of the above error messages occurs, the specific channel or all channels (for 'Low voltage at UB') are set to shutdown mode. This means the functions of the channel(s) are disabled.	Per channel

[1] The module retries detection within five seconds. If the reason for the diagnostic error is not removed in this time, the channel(s) is(are) set to shutdown mode.

[2] Settings in ConfigurationDesk for RapidPro can take effect on the occurrence of the diagnostic messages.

Data Sheet

Where to go from here

Information in this section

SC-EGOS 2/1 Data Sheet.....298
This gives you a complete overview of the module's technical data.

SC-EGOS 2/1 Configuration Template.....299
You can copy and/or print out the template and use it as a master to document your configuration settings.

SC-EGOS 2/1 Data Sheet

Technical data

Parameter	Specification [1)]
Identification	Top view 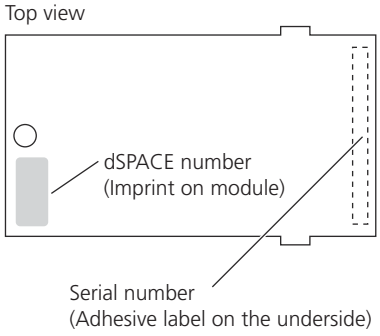 dSPACE number: DS1634
Channels	Two channels for either Bosch LSU4.2, LSU4.9, or LSU ADV (hardware revision DS1634-06 or later) lambda probes
Software	ConfigurationDesk 1.1 (on dSPACE Release 5.0) is required
Diagnostics	▪ Short to GND: UN, VM ▪ Short to GND: IA, IP ▪ Short to UBAT: UN, IA, IP, VM ▪ Low voltage at UB ▪ Shutdown
Lambda measurement range	0.65 … inf and 0.75 … inf (software-configurable)
Pump reference current	0 … 150 µA (software-configurable in 10 µA steps)
Physical size (length x width)	▪ 60 x 31.5 mm (2.36 x 1.24 in.)

Parameter	Specification [1]
	▪ Requires one slot

[1] Unless stated otherwise, the specifications are valid only if the dSPACE hardware is correctly powered, switched on, and ready for operation.

SC-EGOS 2/1 Configuration Template

Objective

You can use the following template as a master to document the settings of your module.

Identification and location

Enter the following parameters to identify and locate the module unambiguously.

Parameter		Specification	Label Location
Identification	dSPACE number	1634	Top view 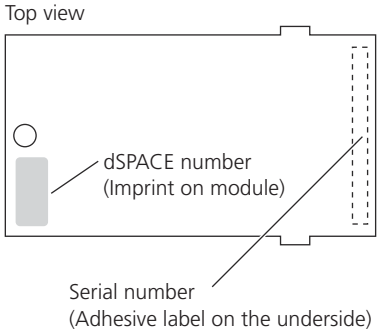
	Serial number		
	Module variant		
Place of installation	System name (unit/stack name)		
	Layer number(s) (unit position in a stack)		
	Slot number (slot on the unit's carrier board)		

Software configuration

Enter the settings for each channel in the table below:

Parameter	CH1	CH2
Channel name		
Supported lambda probe		
Lambda measurement range		
Pump reference current		
Short circuit detection of UN to UBAT		

SC-KNOCK 4/1 Module

Short description

The SC-KNOCK 4/1 module (DS1635) has four channels to connect piezoelectric knock sensors.

Where to go from here

Information in this section

Module Overview.....302
Information on the module's features, components, and functionality will help you assess its possible uses.

Software Configuration.....306
The SC-KNOCK 4/1 module provides parameters which are software-configurable via ConfigurationDesk for RapidPro.

Hardware Configuration.....308
The SC-KNOCK 4/1 module provides user-configurable circuits to add electronic components (resistors, capacitors) to the input circuit of the module.

Module in Use.....311
You have access to information which the module provides during operation.

Data Sheet.....312
The data sheet summarizes the technical data of the SC-KNOCK 4/1 module; there is also a template that you can use as a master to document your configuration settings.

Module Overview

Where to go from here

Information in this section

Module Features.....302
Module Components and Functionality.....302

Module Features

Main features

The main features of the SC-KNOCK 4/1 module are:

- 4 differential inputs to connect piezoelectric knock sensors
- 2 Bosch CC196 knock detection ICs

  The CC196 ICs provide a self test function that you can trigger via ConfigurationDesk.
- Finite impulse response (FIR) filtering is software-configurable via ConfigurationDesk

  Filter characteristics can be changed by downloading new FIR filter coefficients.
- Input circuit is hardware-configurable

Software

ConfigurationDesk 1.1 (on dSPACE Release 5.0) or later is required to work with the SC-KNOCK 4/1 module.

More features

For a complete list of the module's features, refer to SC-KNOCK 4/1 Data Sheet on page 312.

Module Components and Functionality

Objective

A schematic of the I/O circuit is used to show the module's components. More detailed descriptions of the components are given if their functions are not clear from the I/O circuit.

I/O circuit

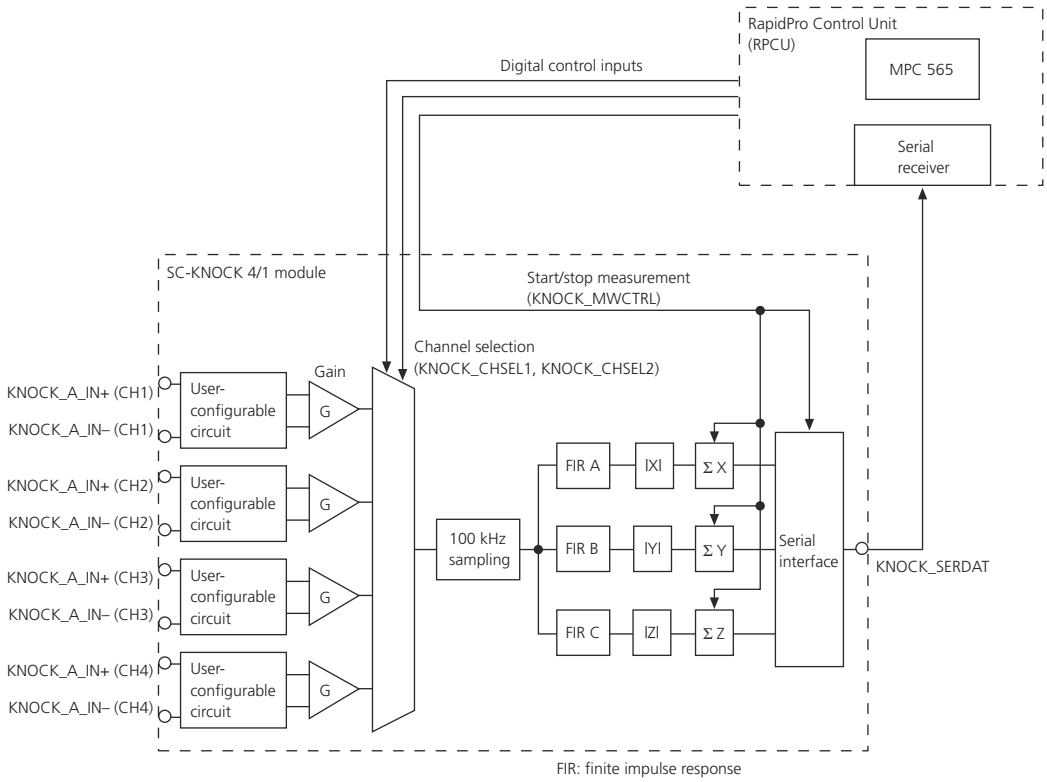

You can connect up to four knock sensors to the inputs of the SC-KNOCK 4/1 module (KNOCK_A_IN+ and KNOCK_A_IN-). The input signals are filtered with up to 3 software-configurable FIR (finite impulse response) filters during the knock measurement process. The absolute output values of each filter are integrated over the process. The three integrator results are passed via the module's serial interface to the microcontroller of the Control Unit at the end of the process.

Note

The module's design allows you to use only one channel at a time.

User-configurable circuit

Additional components (resistors, capacitors) can be soldered to each input to adapt it to different sensor types.

For further information on the user-configurable circuit, refer to Hardware Configuration on page 308.

Digital control inputs

The SC-KNOCK 4/1 module provides digital control inputs to control channel selection (KNOCK_CHSEL1, KNOCK_CHSEL2) and start/stop the knock

measurement (KNOCK_MWCTRL). These inputs are internally connected to the Control Unit's microcontroller (MPC565) and can be specified by your Simulink model.

Each SC-KNOCK 4/1 module requires its own serial receiver on the RapidPro Control Unit. Since the RapidPro Control Unit has four serial receivers, you can use four SC-KNOCK 4/1 modules at maximum.

For further information contact dSPACE.

FIR filter

You can select different frequency ranges of the input signals with 3 FIR filters. dSPACE provides 2 collections with up to 10 FIR (finite impulse response) filters. The collections are stored on the module. One collection is valid for channels 1 and 2, the other collection for channels 3 and 4.

You have to assign 3 FIR filters from the specific collection for each channel via ConfigurationDesk. You can assign the same FIR filter several times.

For further information, refer to Software Configuration on page 306.

You can change FIR filters with a stand-alone software tool. For further information contact dSPACE.

Default settings of the filter collections

The following table shows the default FIR filter settings of a collection. The FIR filter settings are identical for both collections. Each FIR filter has 50 coefficients and all filters have band-pass characteristic (Kaiser window function).

FIR Filter Number	Center Frequency – Fce [1)]	Lower 6 dB Cutoff Frequency – Fc1 [1)]	Upper 6 dB Cutoff Frequency – Fc2 [1)]
1	4 kHz	2.9 kHz	5.1 kHz
2	5 kHz	3.9 kHz	6.1 kHz
3	6 kHz	4.9 kHz	7.1 kHz
4	7 kHz	5.9 kHz	8.1 kHz
5	8 kHz	6.9 kHz	9.1 kHz
6	9 kHz	7.9 kHz	10.1 kHz
7	10 kHz	8.9 kHz	11.1 kHz
8	12 kHz	10.9 kHz	13.1 kHz
9	14 kHz	12.9 kHz	15.1 kHz
10	16 kHz	14.9 kHz	17.1 kHz

[1)] Parameter in ConfigurationDesk

The following illustration shows the frequency ranges of the default FIR filters listed in the table above:

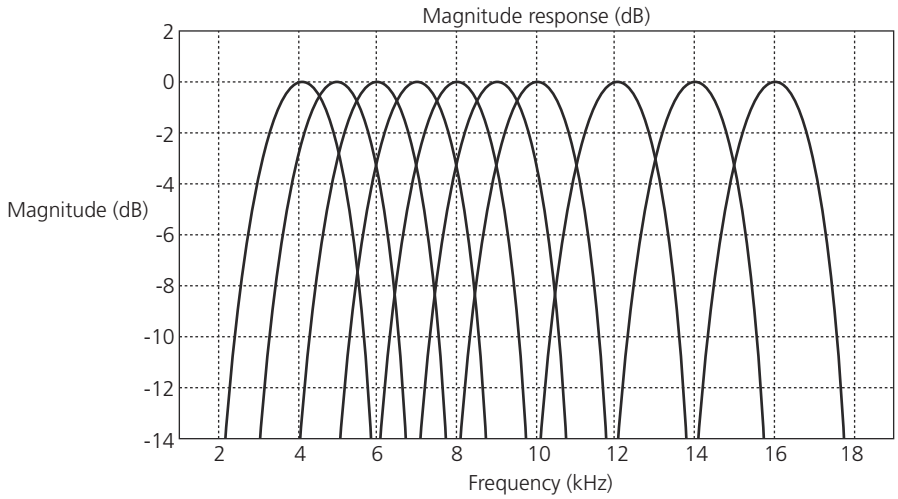

Software Configuration

Configuration via ConfigurationDesk for RapidPro

Objective

Various parameters of the module are configurable via ConfigurationDesk for RapidPro. In addition, the software provides module-specific edit fields to document the values of the soldered components of the user-configurable circuit. This hardware information is stored on the module.

Software-configurable parameters

Parameter	Range/Setting	Factory Default Setting	Description	Valid
Filter settings FIR filter A	1 … 10	1	There are two independent FIR filter collections. One collection is valid for channels 1 and 2, the other for channels 3 and 4.	Per channel
Filter settings FIR filter B		1		
Filter settings FIR filter C		1		
Input gain	▪ 1 ▪ 2 ▪ 4 ▪ 8	1	Setting for the gain factor of the input signal.	

Hardware information

You can enter information about the user-configurable circuit on the module-specific properties dialog. The information is stored on the module as reminders and does not affect the channel's behavior.

The following table shows the relation between the parameter names used in ConfigurationDesk for RapidPro and the names of the components used in the user-configurable circuit:

Parameter in ConfigurationDesk for RapidPro	Component in the Input Circuit	Description	Valid
Capacitor X1	X1	You can use the user-configurable circuit, for example, to limit the input	Per channel
Resistor X2	X2		
Resistor X3	X3		
Capacitor X4	X4		

Parameter in ConfigurationDesk for RapidPro	Component in the Input Circuit	Description	Valid
Capacitor X5	X5	current, or to smooth the input signal.	
Resistor X6	X6		
Resistor X7	X7		
Capacitor X8	X8		
Capacitor X9	X9		
Capacitor X10	X10		

If the components were soldered by dSPACE according to your order, the specific values are already stored.

For a detailed circuit illustration, refer to Overview of User-Configurable Circuit on page 308.

Related topics

References

Hardware Configuration..... 308

Hardware Configuration

Objective

Additional electronic components can be added to the input of each channel to adapt it to different sensor types. The module provides solder pads where you can solder components like resistors or capacitors in user-configurable circuits.

Where to go from here

Information in this section

Overview of User-Configurable Circuit.....308
Solder Pads and Component Requirements.....309

Overview of User-Configurable Circuit

Objective

Each channel of the module provides a user-configurable circuit which can be used to adapt the channel input to different sensor types.

Components of the user-configurable circuit

The following illustration shows the circuit of the SC-KNOCK 4/1 module.

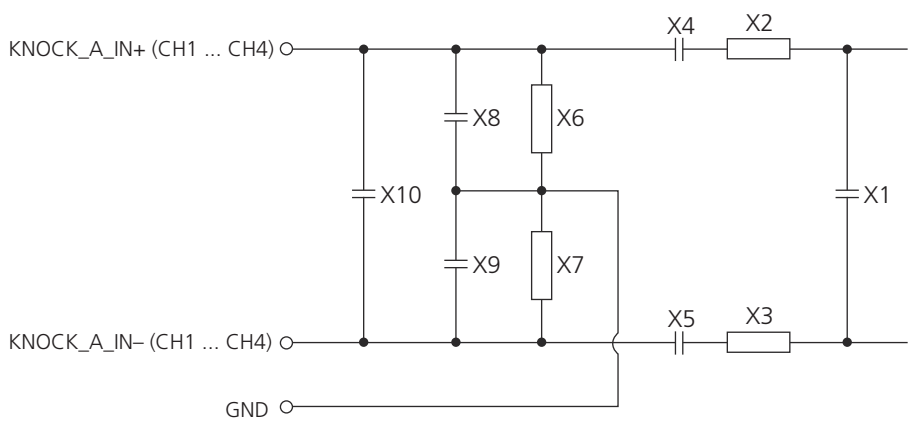

Factory default settings

The settings depend on your order as follows:

- If you did not specify components in your order, the user-configurable circuit of each channel is equipped with:
  - X1 = 330 pF
  - X2 = 5.6 kΩ

- X3 = 5.6 kΩ
- X10 = 4.7 nF
- Solder pads X4 and X5 are soldered with 0 Ω resistors.
- Solder pads X6, X7, X8, and X9 are not soldered.

- If you specified components in your order, these were soldered by dSPACE.

Connecting single-ended knock sensors

If you connect single-ended knock sensors the solder pads X4 and X5 must be equipped with capacitors. For further information contact dSPACE.

Hardware information in ConfigurationDesk for RapidPro

ConfigurationDesk for RapidPro provides a module-specific properties dialog where you can edit the values of the soldered components as reminders for each channel on the module.

For the relevant parameters, refer to Hardware information on page 306.

Related topics

References

Solder Pads and Component Requirements..... 309

Solder Pads and Component Requirements

Objective

The SC-KNOCK 4/1 module provides solder pads to add components to the module's circuit board.

Positions of solder pads

The following illustration shows the SC-KNOCK 4/1 module, containing the positions of the solder pads for the user-configurable circuits.

Top view

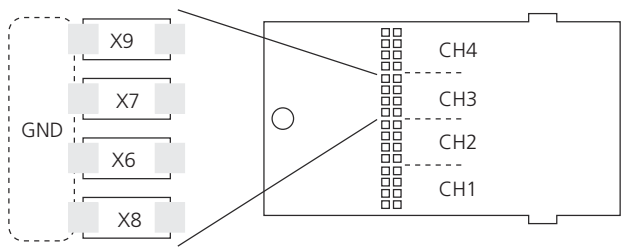

View of underside

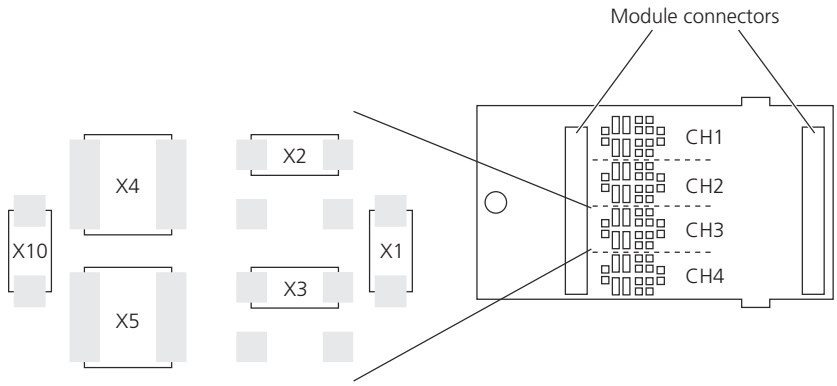

Note

The free solder pads beside X2 and X3 must not be used.

Component requirements

The circuit board is designed for soldering standard SMDs (surface mounted devices):

- X1 … X3 and X6 … X10 = package type 0805
- X4 and X5 = package type 1210

Module in Use

Objective

During operation you can access status information on the SC-KNOCK 4/1 module, such as diagnostic messages, via ConfigurationDesk for RapidPro.

Diagnostics

Diagnostic warnings and diagnostic errors

The diagnostic messages can be divided into warnings and errors.

- Diagnostic warnings occur if a fault is detected. Each warning is dropped as soon as the reason for it is removed.
- Diagnostic errors cause the module functions to be disabled (= shutdown). If a diagnostic error occurs, you have to remove the source of the error and reset the module's diagnostics via ConfigurationDesk for RapidPro.

Precondition to get diagnostic messages

ConfigurationDesk for RapidPro can receive diagnostic messages about channels sent by the RapidPro modules only if the RapidPro system is in execution mode. For further information, refer to Basics on the Display of Diagnostic Messages (ConfigurationDesk for RapidPro - Guide 🕮).

Possible diagnostic messages

Diagnostic Message		Description	Valid
Warning	Short circuit	The message occurs if one of the following conditions come true: $\frac{U_{KNOCK_A_IN+} + U_{KNOCK_A_IN-}}{2} < 1.8\,V$ – or – $\frac{U_{KNOCK_A_IN+} + U_{KNOCK_A_IN-}}{2} > 3.2\,V$ Note: ▪ A short circuit can only be detected if there is running a knock measurement process. ▪ If the module is equipped with capacitors X4 or X5, the short circuit detection can be missed.	Per channel
Error	–	The SC-KNOCK 4/1 module does not provide diagnostic errors.	–

Data Sheet

Where to go from here

Information in this section

SC-KNOCK 4/1 Data Sheet.....312
This gives you a complete overview of the module's technical data.

SC-KNOCK 4/1 Configuration Template.....313
You can copy and/or print out the template and use it as a master to document your configuration settings.

SC-KNOCK 4/1 Data Sheet

Technical data

Parameter	**Specification** [1)]
Identification	Top view 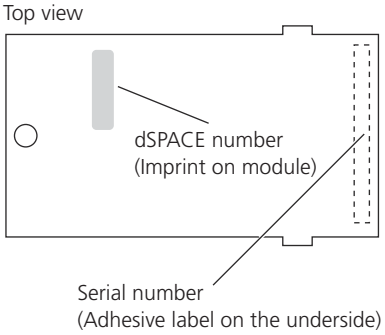
Channels	4 inputs to connect piezoelectric knock sensors
Software	ConfigurationDesk 1.1 (on dSPACE Release 5.0) or later is required
Diagnostics	Short circuit
Input voltage range	0 … 5 V
Filter	▪ 3 FIR filters per channel (50 coefficients per filter) ▪ Software-configurable filter properties: Up to 20 different filter characteristics (10 for channels 1 and 2; 10 for channels 3 and 4) can be stored on the module. ▪ Filter characteristics can be changed by downloading new FIR filter coefficients.
Input gain	▪ 1, 2, 4, 8 ▪ Software-configurable per channel

Parameter	Specification [1]
Input circuit	Additional components (resistors, capacitors) can be connected to each channel to adapt the input to different sensor types.
Output signal	Galvanically decoupled
Physical size (length x width)	▪ 60 x 31.5 mm (2.36 x 1.24 in.) ▪ Requires one slot

[1] Unless stated otherwise, the specifications are valid only if the dSPACE hardware is correctly powered, switched on, and ready for operation.

Related topics

References

Module Features..... 302

SC-KNOCK 4/1 Configuration Template

Objective

You can use the following template to document the settings of your module.

Identification and location

Enter the following parameters to identify and locate the module unambiguously.

Parameter		Specification	Label Location
Identification	dSPACE number	1635	Top view 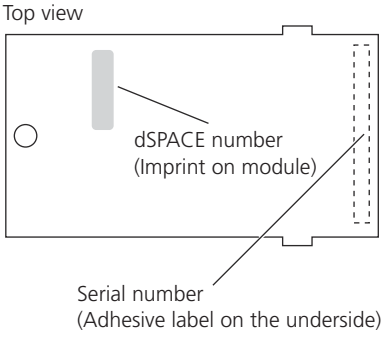
	Serial number		
	Module variant		
Place of installation	System name (unit/stack name)		
	Layer number(s) (unit position in a stack)		
	Slot number (slot on the unit's carrier board)		

Software configuration

Enter the settings for each channel in the table below:

Parameter		CH1	CH2	CH3	CH4
Channel name					
CC196 version	Channel 1 and 2			Not available.	
	Channel 3 and 4	Not available.			
Filter settings FIR filter A	Number of the entry				
	Lower 6 dB cutoff frequency in Hz – Fc1 [1)]				
	Center frequency in Hz – Fce [1)]				
	Upper 6 dB cutoff frequency in Hz – Fc2 [1)]				
	Order of the FIR filter – order [1)]				
	Comment (max. 20 character)				
Filter settings FIR filter B	Number of the entry				
	Lower 6 dB cutoff frequency in Hz – Fc1 [1)]				
	Center frequency in Hz – Fce [1)]				
	Upper 6 dB cutoff frequency in Hz – Fc2 [1)]				
	Order of the FIR filter – order [1)]				
	Comment (max. 20 character)				
Filter settings FIR filter C	Number of the entry				
	Lower 6 dB cutoff frequency in Hz – Fc1 [1)]				
	Center frequency in Hz – Fce [1)]				
	Upper 6 dB cutoff frequency in Hz – Fc2 [1)]				
	Order of the FIR filter – order [1)]				
	Comment (max. 20 character)				

[1)] Parameter in ConfigurationDesk for RapidPro

User-configurable circuit

Enter the settings for each channel in the table below:

Parameter	CH1	CH2	CH3	CH4
Channel name				
Capacitor X1 [1)]				
Resistor X2 [1)]				
Resistor X3 [1)]				
Capacitor X4 [1)]				
Capacitor X5 [1)]				
Resistor X6 [1)]				
Resistor X7 [1)]				
Capacitor X8 [1)]				
Capacitor X9 [1)]				
Capacitor X10 [1)]				
Input circuit	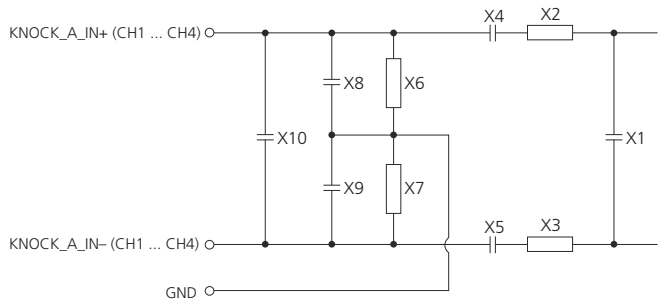			
Solder pads	Top view 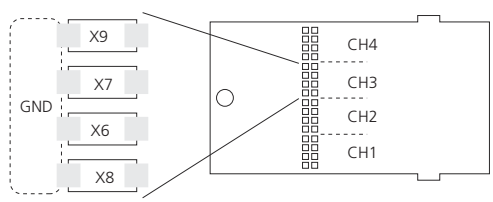 View of underside 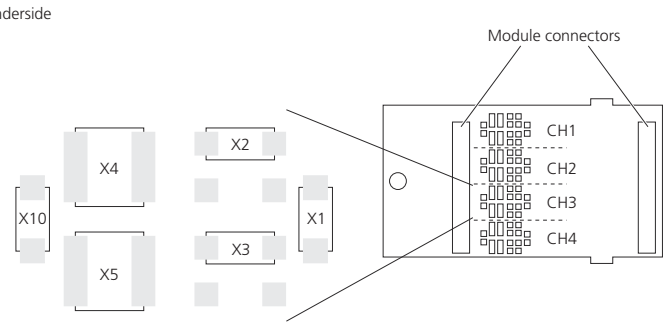			
Package type	▪ X1 … X3 and X6 … X10 = package type 0805			

Parameter	CH1	CH2	CH3	CH4
	▪ X4 and X5 = package type 1210			

[1] Parameter in ConfigurationDesk for RapidPro.

SC-TC 8/1 Module

Short description

The SC-TC 8/1 module (DS1638) provides 8 channels to connect thermocouples to a RapidPro system via splitter cable.

Where to go from here

Information in this section

Module Overview.....318
Information on the module's features, components, and functionality will help you assess its possible uses.

Software Configuration.....321
You can indicate settings of the SC-TC 8/1 module via ConfigurationDesk for RapidPro.

Connection to Thermocouples.....322
There are points to note when you connect thermocouples.

Module in Use.....324
You have access to information which the module provides during operation.

Data Sheet.....326
The data sheet summarizes the technical data of the SC-TC 8/1 module; there is also a template that you can use as a master to document your configuration settings.

Module Overview

Where to go from here

Information in this section

Module Features.....318
Module Components and Functionality.....319

Module Features

Main features

The main features of the module are:

- Eight inputs to connect thermocouples:
  - All channels are galvanically isolated from each other and from ground (±60 V).
- Suitable for type K thermocouples (NiCr-Ni), already prepared for type J (Fe-CuNi):
  - Linearization according to EN 60584 implemented on the module.
- A/D converter:
  - One 24-bit A/D converter per channel, sampling rate for each converter in the range 0.1 Hz … 60 Hz (software-configurable via RTI).
  - Synchronous measurement of all channels with three measurement conversion modes:
    - Continuous conversion mode with auto transfer
    - Continuous conversion mode with triggered transfer
    - Triggered conversion mode with auto transfer
  - A/D converter for highly precise cold junction compensation (temperature measurement at reference points in the Sub-D connector (isothermal block) of the dSPACE splitter cable).
  - Accuracy for the measurement range depending on the operating temperature of the unit/stack (see SC-TC 8/1 Data Sheet on page 327).
- RP_THM_CAB1 splitter cable:
  - Suitable for type K thermocouples (NiCr-Ni)
  - Temperature measurement (PT1000) at reference points in the Sub-D connector (isothermal block) for highly precise cold junction compensation.
- RP_THM_CAB2 splitter cable:
  - Suitable for type J thermocouples (Fe-CuNi)
  - Temperature measurement (PT1000) at reference points in the Sub-D connector (isothermal block) for highly precise cold junction compensation.

Software

- ConfigurationDesk 1.1.2 (on dSPACE Release 5.2) with plug-in software, or later is required to work with the SC-TC 8/1 module.
- SC-TC 8/1 Real-Time Interface (RTI) block as part of the RTI RapidPro Control Unit Blockset.

More features

- For a complete list of the module's features, refer to SC-TC 8/1 Data Sheet on page 327.
- For details on the RP_THM_CAB1 splitter cable, refer to RP_THM_CAB1 Splitter Cable Data Sheet on page 329.
- For details on the RP_THM_CAB2 splitter cable, refer to RP_THM_CAB2 Splitter Cable Data Sheet on page 330.

Module Components and Functionality

Objective

The module's components are shown on the basis of its simplified I/O circuit. More detailed descriptions of the components are given if their functions are not clear from the I/O circuit.

I/O circuit

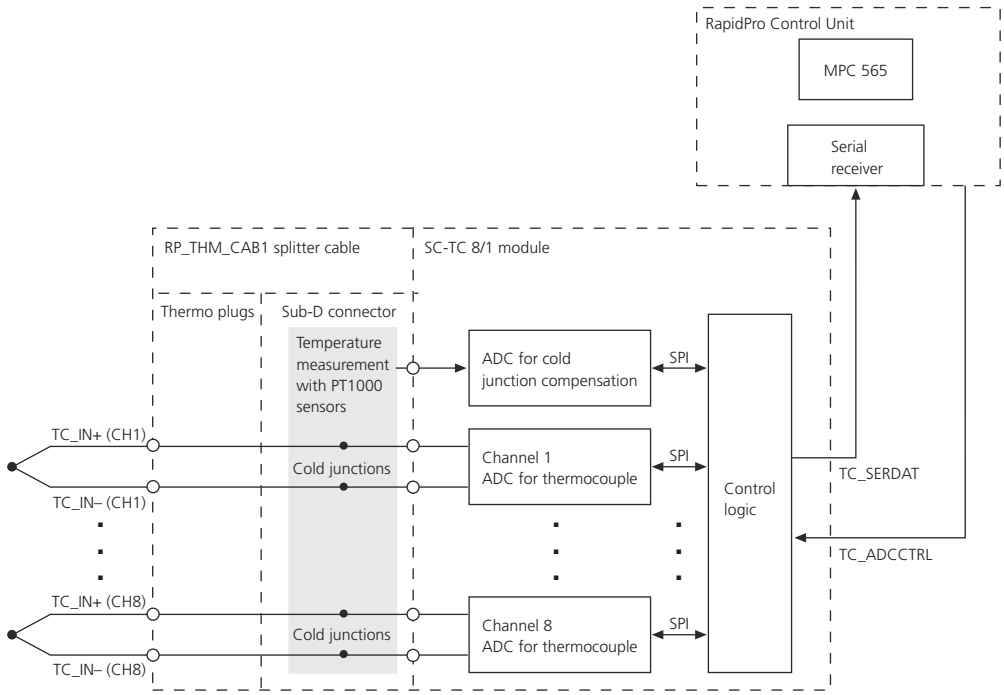

Splitter cable

You must connect thermocouples to the RapidPro system via splitter cable. The RP_THM_CAB1 splitter cable is suitable for connecting K type thermocouples (NiCr-Ni). The RP_THM_CAB2 splitter cable is suitable for connecting J type thermocouples (Fe-CuNi).

Cold junctions and cold junction compensation

The temperatures of the cold junctions are measured with temperature sensors (PT1000) which are located in the cable's Sub-D connector, which is connected to the RapidPro system. The temperature on the cold junctions is important for the further evaluation of the absolute temperatures on the sensor location. The Sub-D connector is built as an isothermal block to ensure high-precision cold junction compensation.

Signal processing

The analog voltage signals of the connected thermocouples are digitized per channel via 24-bit A/D converter. The measurement is triggered (TC_ADCCTRL) via software (RTI).

The following trigger modes are available:

- Continuous conversion mode with auto transfer
- Continuous conversion mode with triggered transfer
- Triggered conversion mode with auto transfer

The measuring result is written (TC_SERDAT) to the Control Unit's serial receiver.

You can configure the module's temperature measurement via SC-TC 8/1 Real-Time Interface (RTI) block as part of the RTI RapidPro Control Unit Blockset. For further information, refer to How to Implement Temperature Measurement with the SC-TC 8/1 Module (RapidPro System – I/O Subsystem MPC565 Implementation Features 🕮).

Software Configuration

Configuration via ConfigurationDesk for RapidPro

Objective

The hardware parameters of the SC-TC 8/1 module are not software-configurable via ConfigurationDesk for RapidPro. However, ConfigurationDesk for RapidPro provides a module-specific dialog with information which type of thermocouples can be connected.

Module Configuration page

Parameter	Description
Thermocouple sensor type	Indicates which dSPACE splitter cable is connected and consequently which sensor types can be connected to the RapidPro system. If no or a not supported cable is connected, a hyphen is displayed.

Connection to Thermocouples

Notes on Connecting Thermocouples

Objective

You must connect thermocouples to the RapidPro system via splitter cable. Note the following points when connecting thermocouples.

Connecting the splitter cable to RapidPro units

Connect the splitter cable to the I/O connectors F1 or F2 of the RapidPro unit in which the SC-TC 8/1 module is installed. Which I/O connector you must use, depends on the slots the module is installed in:

- SC Unit's I/O connector F1 = SC-TC 8/1 on slots 1 … 3
- SC Unit's I/O connector F2 = SC-TC 8/1 on slots 5 … 7

Note

The splitter cable must be connected to the RapidPro units directly.

To avoid measuring errors:

- Do not connect the splitter cable to Break-Out Boxes.
- Do not connect any other cable between RapidPro system and splitter cable.

Connecting thermocouples

Which type of thermocouples (for example, K) you can connect to the RapidPro system depends on the splitter cable used. The Sub-D connector that must be connected to the RapidPro system is built as an isothermal block and contains electronic components for cold junction compensation.

NOTICE

Kinking may damage the splitter cable.

You must avoid repeatedly intensive kinking of the NiCr-Ni cables (between thermo plugs and Sub-D connector) to avoid damage to the cables.

Connection polarity Pay attention to the polarity if you connect thermocouples to the thermo plugs of the splitter cable. You can identify the polarity on the thermo plug of the splitter cable by "+" and "-", as shown in the illustration below.

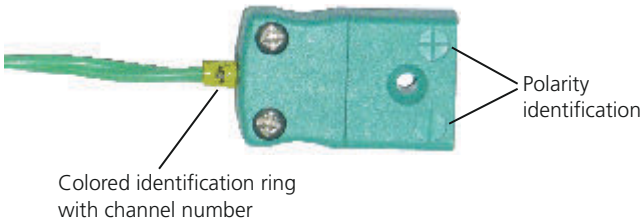

Extending the connection to a thermocouple You can extend the connection between a thermocouple and the thermo plugs of the splitter cable by a suitable cable (NiCr-Ni). However, you have to keep in mind that the longer the cable is, the greater is the possibility of a measuring error.

Module in Use

Objective

During operation you can access status information on the SC-TC 8/1 module, such as diagnostic messages, via ConfigurationDesk for RapidPro.

Diagnostics

Diagnostic warnings and diagnostic errors

The diagnostic messages can be divided into warnings and errors:

- Diagnostic warnings occur if a fault is detected. Each warning is dropped as soon as the reason for it is removed.
- Diagnostic errors cause the module functions to be disabled (shutdown). If a diagnostic error occurs, you have to remove the source of the error and reset the module's diagnostics via ConfigurationDesk for RapidPro.

Precondition to get diagnostic messages

ConfigurationDesk for RapidPro can receive diagnostic messages about channels sent by the RapidPro modules only if the RapidPro system is in execution mode. For further information, refer to Basics on the Display of Diagnostic Messages (ConfigurationDesk for RapidPro - Guide 🕮).

Possible diagnostic messages

Diagnostic Message		Description	Valid
Warning	Cable break	The message occurs in either of the following cases: ▪ The channel's cable from the Sub-D connector to the thermo plugs of the splitter cable is damaged. ▪ The channel is activated via RTI, but no thermocouple is connected.	Per channel
	Analog digital converter error	A malfunction of a channel's A/D converter was detected.	
	Cold junction compensation error	The message occurs in either of the following cases: ▪ The splitter cable is not correctly connected. ▪ The A/D converter of the cold junction compensation has a malfunction. ▪ The temperature range of the cold junction compensation is exceeded.	All channels

Diagnostic Message		Description	Valid
Error	Channel calibration error	Every start of a real-time application triggers the self-calibration of the A/D converters for every channel. The message occurs if self-calibration fails. [1]	Per channel
	Shutdown	All channels are set to shutdown mode. This means module functions are disabled.	All channels

[1] The module retries detection within five seconds. If the reason for the diagnostic error is not removed in this time, the module is set to shutdown mode.

Data Sheet

Where to go from here

Information in this section

SC-TC 8/1 Data Sheet.....327
This gives you a complete overview of the module's technical data.

RP_THM_CAB1 Splitter Cable Data Sheet.....329
To connect up to 8 thermocouples of type K (NiCr-Ni) to a RapidPro system with installed SC-TC 8/1 (DS1638).

RP_THM_CAB2 Splitter Cable Data Sheet.....330
To connect up to 8 thermocouples of type J (Fe-CuNi) to a RapidPro system with installed SC-TC 8/1 (DS1638).

SC-TC 8/1 Configuration Template.....331
You can copy and/or print out the template and use it as a master to document your configuration settings.

SC-TC 8/1 Data Sheet

Technical data

Parameter		Specification [1]
Identification		Top view 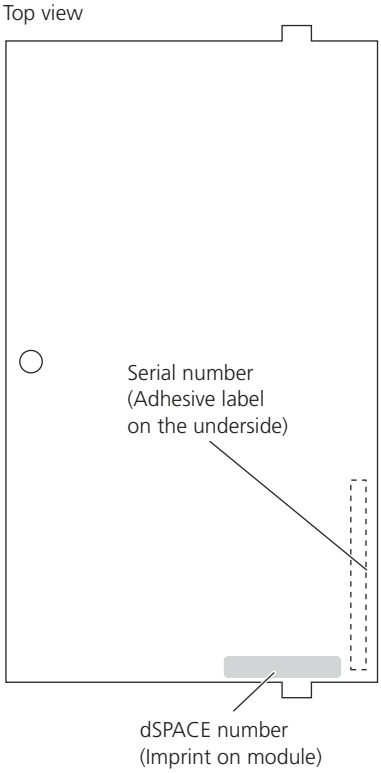 dSPACE number: DS1638
Channels		8 input channels: ▪ Galvanically isolated from each other and from ground (±60 V)
Software		ConfigurationDesk 1.1.2 (on dSPACE Release 5.2) with additional plug-in software, or later is required.
Diagnostics		Cable break, analog-digital converter error, cold junction compensation error, channel calibration error
Overvoltage protection		±3.3 V at the channel input
Measurement	Range	▪ Type K sensors: –100 … +1372 °C (–148 … +2502 °F) ▪ Type J sensors: –100 … +1200 °C (–148 … +2192 °F)
	Accuracy	Type K sensors: ▪ ± 1 K for operating temperature range –40 … 0 °C (–40 … 32 °F) ▪ ± 0.5 K for operating temperature range >0 … +85 °C (>32 … 185 °F)

Parameter		Specification [1]
		Type J sensors: ▪ ± 1 K for operating temperature range –40 … +85 °C (–40 … 185 °F)
A/D converter	Resolution	24-bit per channel (delta-sigma)
	Sampling rate	0.1 Hz … 60 Hz
	Synchronization	Synchronous measurement of all channels
	Conversion mode	▪ Continuous conversion mode with auto transfer ▪ Continuous conversion mode with triggered transfer ▪ Triggered conversion mode with auto transfer
	Self-calibration	Self-calibration of the A/D converters for every channel to default values with every start of a real-time application to compensate internal offsets.
	Cold junction compensation	▪ Highly precise cold junction compensation (PT1000 temperature sensors at the reference points in the Sub-D connector of the dSPACE splitter cable) ▪ Range: –40 °C … +85 °C (–40 °F … +185 °F)
Thermocouple connection		Connection of thermocouples via dSPACE splitter cable (see RP_THM_CAB1 Splitter Cable Data Sheet on page 329 and RP_THM_CAB2 Splitter Cable Data Sheet on page 330).
Physical size (length x width)		▪ 60 x 96.5 mm (2.36 x 3.8 in.) ▪ Requires three slots

[1] Unless stated otherwise, the specifications are valid only if the dSPACE hardware is correctly powered, switched on, and ready for operation.

RP_THM_CAB1 Splitter Cable Data Sheet

Technical data

The following table shows the technical specifications of the RP_THM_CAB1 splitter cable:

Parameter	**Specification** [1]
Purpose	To connect up to 8 thermocouples of type K (NiCr-Ni) to a RapidPro system with installed SC-TC 8/1 (DS1638).
Illustration	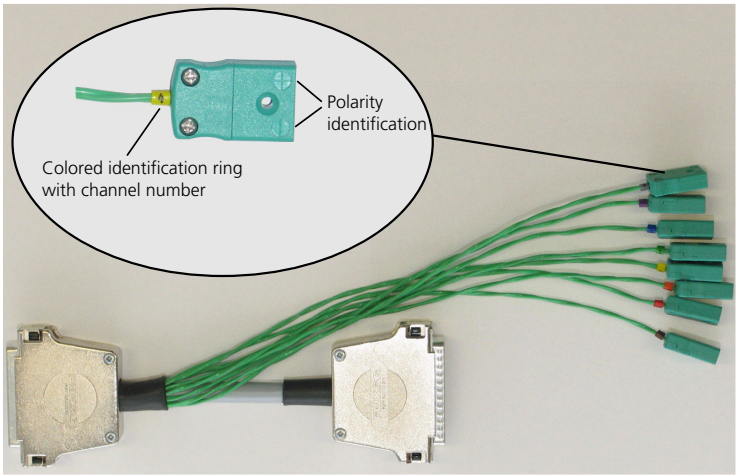
Connector	▪ Female Sub-D connector with 50 signal pins ▪ Integrated PT1000 temperature sensors for cold junction compensation on the SC-TC 8/1 module ▪ Built as isothermal block – ▪ Male Sub-D connector with 22 signal pin ▪ 8 two-pin thermo plugs (numbered and color-coded via identification rings) with NiCr-Ni cable to the Sub-D connector
Length	▪ Sub-D to Sub-D: 0.1 m (3.93 in.) ▪ Sub-D to thermo plugs: 0.3 m (11.8 in.)
Operating temperature	–40 … +85 °C (–40 … +185 °F)

Channel	*Color*
8	Grey
7	Violet
6	Blue
5	Green
4	Yellow
3	Orange
2	Red
1	Brown

[1] Unless stated otherwise, the specifications are valid only if the dSPACE hardware is correctly powered, switched on, and ready for operation.

RP_THM_CAB2 Splitter Cable Data Sheet

Technical data

The following table shows the technical specifications of the RP_THM_CAB2 splitter cable:

Parameter	**Specification** [1]
Purpose	To connect up to 8 thermocouples of type J (Fe-CuNi) to a RapidPro system with installed SC-TC 8/1 (DS1638).
Illustration	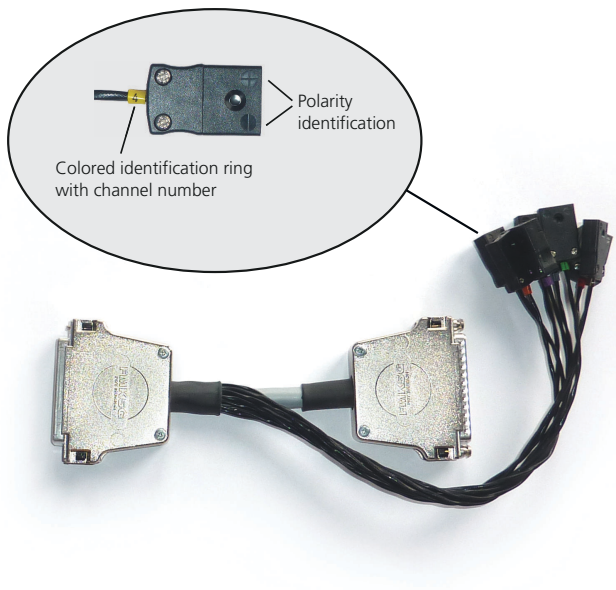

Channel	*Color*
8	Grey
7	Violet
6	Blue
5	Green
4	Yellow
3	Orange
2	Red
1	Brown

Connector	▪ Female Sub-D connector with 50 signal pins ▪ Integrated PT1000 temperature sensors for cold junction compensation on the SC-TC 8/1 module ▪ Built as isothermal block	–	▪ Male Sub-D connector with 22 signal pin ▪ 8 two-pin thermo plugs (numbered and color-coded via identification rings) with Fe-CuNi cable to the Sub-D connector
Length	▪ Sub-D to Sub-D: 0.1 m (3.93 in.) ▪ Sub-D to thermo plugs: 0.3 m (11.8 in.)		
Operating temperature	–40 … +85 °C (–40 … +185 °F)		

[1] Unless stated otherwise, the specifications are valid only if the dSPACE hardware is correctly powered, switched on, and ready for operation.

SC-TC 8/1 Configuration Template

Objective

You can use the following template as a master to document the settings of your module.

Identification and location

Enter the following parameters to identify and locate the module unambiguously.

Parameter		Specification	Label Location
Identification	dSPACE number	1638	Top view 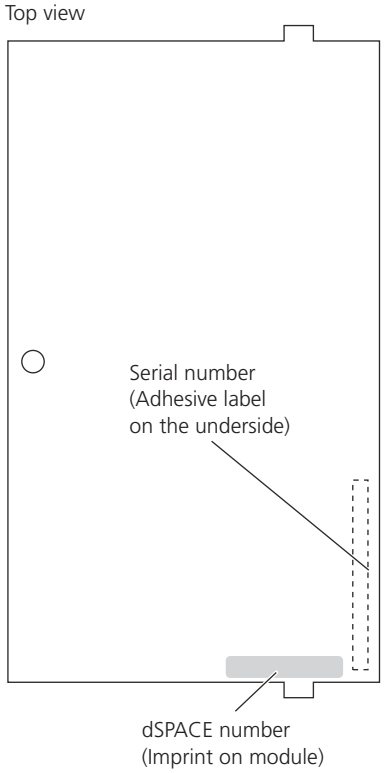
	Serial number		
	Module variant		
Place of installation	System name (unit/stack name)		
	Layer number(s) (unit position in a stack)		
	Slot number (slot on the unit's carrier board)		

Software configuration

Enter the settings in the table below:

Parameter	CH1	CH2	CH3	CH4	CH5	CH6	CH7	CH8
Thermocouple sensor type								

SC-UHEGO 2/1 Module

Short description

The SC-UHEGO 2/1 module (DS1639) is a two-channel *u*niversal *h*eated *e*xhaust *g*as *o*xygen (UHEGO) sensor module for connecting the following Denso lambda probes:

- PLUS2.1
- PLUS3.x
- PLUS5.0
- PLUS5.1

Note

- Complete knowledge on the connected lambda probes is recommended for working with the SC-UHEGO 2/1 module. Refer to the technical documentation of the specific lambda probe.
- The signal terms in this section correspond to the signal terms of the supported lambda probes and the Denso ICs on the module. The Denso ICs are part of the module's hardware and control the connected lambda probes.

Installing or rearranging the module

If you want to install or rearrange the SC-UHEGO 2/1 module in a single unit or a stack with UCB, you need a custom-built routing code. Contact dSPACE for an appropriate routing code.

The routing code defines which RapidPro module can be installed on which slot of a single unit or a stack with UCB.

Where to go from here

Information in this section

Module Overview.....335
Information on the module's features, components, and functionality will help you assess its possible uses.

Software Configuration.....338
The SC-UHEGO 2/1 module provides parameters which are software-configurable via ConfigurationDesk for RapidPro.

Driving Lambda Probes.....339
There are some points to note when using lambda probes and their heaters.

Module in Use.....345
You have access to information which the module provides during operation.

Data Sheet.....347
The data sheet summarizes the technical data of the SC-UHEGO 2/1 module; there is also a template that you can use as a master to document your configuration settings.

Module Overview

Where to go from here

Information in this section

Module Features.....335
Module Components and Functionality.....335

Module Features

Main features

The main features of the module are:

- It is based on two Denso UHEGO control ICs which are used to control the connected lambda probes.
- It provides two channels to connect Denso lambda probes PLUS2.1, PLUS3.x, PLUS5.0, or PLUS5.1 (software-configurable per channel).
- Air-to-fuel ratio (AFR) range: 10 … ∞ and 12 … 25 (software-configurable).
- Trigger input for internal resistance measurement of the connected lambda probe.

Software

ConfigurationDesk 1.2.1 or later (on dSPACE Release 5.4 or later) with plug-in software is required to work with the SC-UHEGO 2/1 module.

More features

For a complete list of the module's features, refer to SC-UHEGO 2/1 Data Sheet on page 347.

Related topics

References

Module Components and Functionality.....335

Module Components and Functionality

Objective

The module's components are shown on the basis of its simplified I/O circuit. More detailed descriptions of the components are given if their functions are not clear from the I/O circuit.

I/O circuit

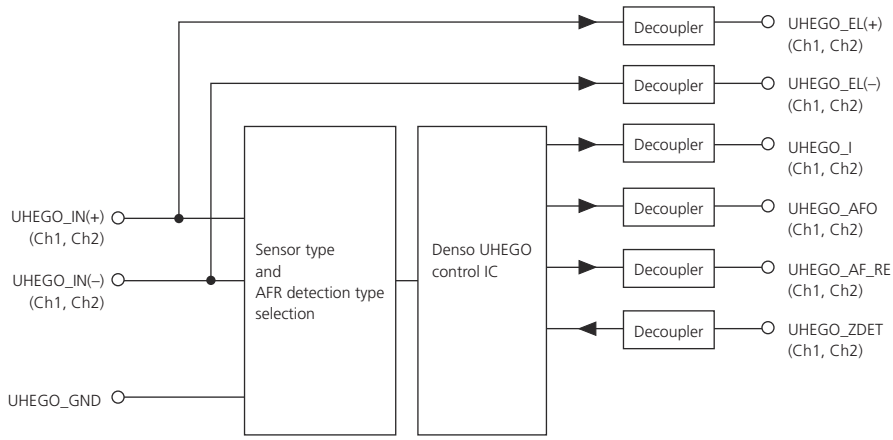

The SC-UHEGO 2/1 module is based on two ICs from Denso.

UHEGO signals

The following table lists the available signals:

Signal	Description	Technical Specification
UHEGO_IN(+)	Positive oxygen sensor input to connect the Denso lambda probe.	According to the connected lambda probe.
UHEGO_IN(–)	Negative oxygen sensor input to connect the Denso lambda probe.	
UHEGO_GND	Module ground **Note** You must connect the UHEGO_GND pin, which is available on the RapidPro unit's front connector, to the ground of the RapidPro system. An unconnected ground pin can cause the module to malfunction.	–
UHEGO_EL(+)	The routed decoupled UHEGO_IN(+) signal is available on the UHEGO_EL(+) pin.	According to the connected lambda probe.
UHEGO_EL(–)	The routed decoupled UHEGO_IN(–) signal is available on the UHEGO_EL(–) pin.	
UHEGO_I	Analog impedance output voltage.	0 … 5.3 V
UHEGO_AFO	Air-to-fuel ratio output voltage.	
UHEGO_AF_RE	Air-to-fuel ratio read enable output.	TTL voltage level
UHEGO_ZDET	Internal resistance measurement trigger input.	

Measuring the internal resistance of the lambda probe

The SC-UHEGO 2/1 module provides an UHEGO_ZDET input for each channel to trigger an internal resistance measurement of the Denso lambda probe. The temperature of a lambda probe can be deduced from its internal resistance. For further information, refer to Determining the Internal Resistance of a Lambda Probe on page 341.

You have to note that the air-to-fuel ratio measurement is impaired for approx. 4.5 ms during the internal resistance measurement. For further information on the timing, there is a dSPACE application note which can be provided on request.

Driving the heater of the lambda probe

You need an additional power stage module for driving the heater of the connected lambda probe. For further information, refer to Notes on Driving Denso Lambda Probes on page 339.

Related topics

References

Module Features..... 335

Software Configuration

Configuration via ConfigurationDesk for RapidPro

Objective

Various parameters of the module are configurable via ConfigurationDesk for RapidPro.

Software-configurable parameters

Note

Complete knowledge on the connected lambda probes is recommended for working with the SC-UHEGO 2/1 module. Refer to the technical documentation of the specific lambda probe.

Parameter	Range/ Setting	Factory Default Setting	Description	Valid
Supported lambda probe	▪ PLUS2.1 ▪ PLUS3.x	PLUS2.1	Note: Set PLUS3.x if you connect a PLUS5.0 or PLUS5.1 probe to the channel.	For each channel
Lambda measurement range	▪ Wide range ▪ Stoichiometric range	Wide range	Wide range means: air-to-fuel ratio (AFR) in the range 10 … ∞. Stoichiometric range means: air-to-fuel ratio (AFR) in the range 12 … 25. Tip: You can use the stoichiometric range for a more detailed view compared to the wide range. This provides more accurate measurement.	

Related topics

References

SC-UHEGO 2/1 Configuration Template..... 348

Driving Lambda Probes

Where to go from here

Information in this section

Notes on Driving Denso Lambda Probes.....339
Determining the Internal Resistance of a Lambda Probe.....341
Determining the Current of a Lambda Probe.....343

Notes on Driving Denso Lambda Probes

Objective

You must note the following points when using lambda probes and driving their heaters.

Driving the probe's heater

The heater of the probe is not driven by the SC-UHEGO 2/1 module. It must be driven by an additional device, for example, a suitable RapidPro power stage module. The way to drive the heater depends on your hardware assembly (SC-UHEGO 2/1 installed in a Control Unit or stack with UCB or SC-UHEGO 2/1 installed in a single SC Unit).

Connection example for a stack with UCB

To drive the heater of the probe, for example, a PS-LSD 6/1 module (DS1662) must be installed in the Power Unit that is part of a stack with UCB.

The following illustration gives a simplified connection example. The signal terms correspond to the signal terms of the supported lambda probes and the Denso ICs on the module. The Denso ICs are part of the module's hardware and control the connected lambda probes.

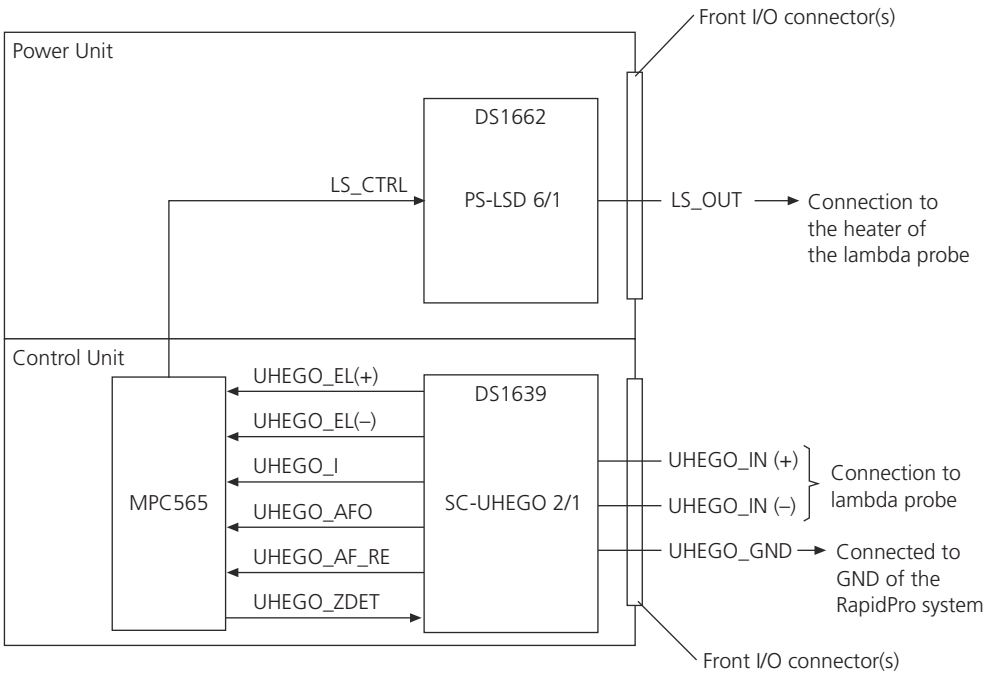

Note

You must connect the UHEGO_GND pin to the ground of the RapidPro system to avoid module malfunction.

Connection example for single RapidPro units

You need a single SC Unit and a single Power Unit with an installed power stage module (in this example a PS-LSD 6/1) to drive the heater of the probe.

The following illustration gives a simplified connection example. The signal terms correspond to the signal terms of the supported lambda probes and the Denso ICs on the module. The Denso ICs are part of the module's hardware and control the connected lambda probes.

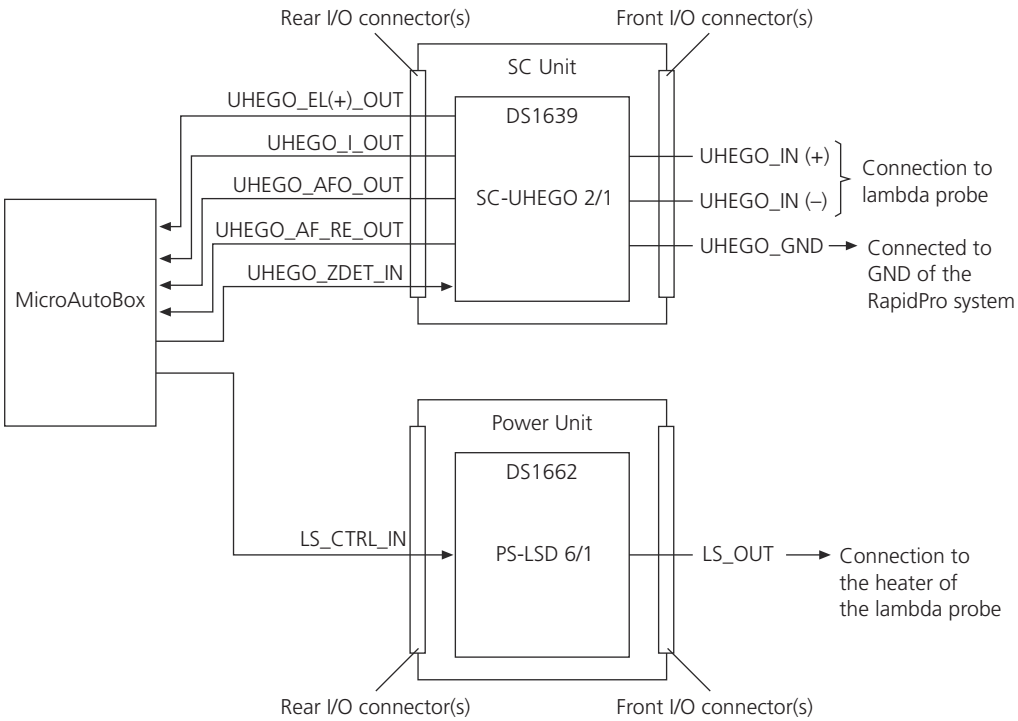

Note

You must connect the UHEGO_GND pin to the ground of the RapidPro system to avoid module malfunction.

For information on voltage ranges permitted for the signals which are connected to the MicroAutoBox, refer to Module Components and Functionality on page 335.

Further information

For detailed notes and tips, there is a dSPACE application note that is provided with the module.

Determining the Internal Resistance of a Lambda Probe

Objective

The temperature of a lambda probe can be deduced from its internal resistance. You can calculate the internal resistance R_{ac} via the UHEGO_I signal. You can measure the signal if you trigger the UHEGO_ZDET input of the Denso UHEGO Control IC. You have to note that the air-to-fuel ratio measurement is impaired for approx. 4.5 ms during the resistance measurement. For information on the timing, there is a dSPACE application note which can be provided on request.

Calculation of R_{ac} in relation to UHEGO_I

The signal UHEGO_I lets you determine the lambda probe's internal resistance R_{ac}, which also depends on the probe's temperature.

$$R_{ac}[\Omega] = \frac{\text{Factor}_{ac}}{\text{UHEGO_I [V]}} \times 0.4$$

Anticipated range of R_{ac}: 16 Ω … ∞

Note

You get a valid measurement of lambda values, if the value of R_{ac} is in a valid range and the UHEGO_AF_RE signal indicates the termination of the measurement.

$Factor_{ac}$ in the formula above depends on the setting of the measurement range and on the connected lambda probe as shown in the table below:

Parameter	Lambda Probe	$Factor_{ac}$
Wide range	PLUS2.1	120
	PLUS3.x	200
	PLUS5.0	
	PLUS5.1	
Stoichiometric range	PLUS2.1	
	PLUS3.x	
	PLUS5.0	
	PLUS5.1	

Note

For detailed information on the connection between R_{ac} and the probe's temperature, refer to the technical documentation of the specific probe.

Notes on determining R_{ac} depending on the different RapidPro use scenarios

Note

- *Installed in a stack with UCB – intelligent I/O subsystem use scenario*
  If the module is installed in a Control Unit or a stack with UCB, you must measure the UHEGO_I signal with an RPCU_ADC block. You can determine the voltage with the following formula: UHEGO_I [V] = ADC_VALUE(UHEGO_I) x 5
- *Installed in a single SC Unit – signal conditioning and power stage use scenario*
  You can directly measure the voltage on its rear I/O connector if the module is installed in a single SC Unit.

Determining the Current of a Lambda Probe

Objective

To draw conclusions about the air-to-fuel ratio (AFR), you can determine the current IL of a connected lambda probe with the signals UHEGO_AFO and UHEGO_EL(+).

Calculation of IL in relation to UHEGO_AFO and UHEGO_EL(+)

The signals UHEGO_AFO and UHEGO_EL(+) let you determine the current IL of the lambda probe. You can calculate IL with the following formula:

$$IL\,[mA] = \frac{UHEGO_AFO\,[V] - UHEGO_EL(+)\,[V]}{Factor_{IL}} \times 1000$$

$Factor_{IL}$ in the formula above depends on the setting of the measurement range and on the connected lambda probe as shown in the table below:

Parameter	Lambda Probe	$Factor_{IL}$
Wide range	PLUS2.1	720
	PLUS3.x	1200
	PLUS5.0	
	PLUS5.1	
Stoichiometric range	PLUS2.1	1380
	PLUS3.x	2299.6
	PLUS5.0	
	PLUS5.1	

Note

For detailed information on the relation between AFR and the current IL, refer to the technical documentation of the specific lambda probe.

Notes on determining IL depending on the different RapidPro use scenarios

Note

- *Installed in a stack with UCB – intelligent I/O subsystem use scenario*
  If the module is installed in a Control Unit or a stack with UCB, you must measure the UHEGO_I signal with an RPCU_ADC block. You can determine the voltage with the following formula:
  - UHEGO_AFO [V] = ADC_VALUE(UHEGO_AFO) x 5
  - UHEGO_EL(+) [V] = ADC_VALUE(UHEGO_EL(+)) x 5
- *Installed in a single SC Unit – signal conditioning and power stage use scenario*
  You can directly measure the voltage on its rear I/O connector if the module is installed in a single SC Unit.

Module in Use

Objective

During operation you can access status information of the SC-UHEGO 2/1 module via ConfigurationDesk for RapidPro. The module provides:

- Permanent monitoring of the channel outputs of the module
- Diagnostic messages about the status of the module and the status of the connection to external devices

Where to go from here

Information in this section

Monitoring.....345
Diagnostics.....345

Monitoring

Monitored parameters

Note

The signal monitoring values displayed via ConfigurationDesk for RapidPro are for support purposes only. They do not represent actual measurement results.

Diagnostics

Diagnostic warnings and diagnostic errors

The diagnostic messages can be divided into warnings and errors.

- Diagnostic warnings occur if a fault is detected. Each warning is dropped as soon as the reason for it is removed.
- Diagnostic errors cause the module functions to be disabled (shutdown). If a diagnostic error occurs, you have to remove the source of the error and reset the module's diagnostics via ConfigurationDesk for RapidPro.

Precondition to get diagnostic messages

ConfigurationDesk for RapidPro can receive diagnostic messages about channels sent by the RapidPro modules only if the RapidPro system is in execution mode. For further information, refer to Basics on the Display of Diagnostic Messages (ConfigurationDesk for RapidPro - Guide 🕮).

Possible diagnostic messages

Diagnostic Message		Description	Valid
Warning	Sensor(+): Short to GND	The UHEGO_IN(+) pin is connected to ground.	Per channel
	Sensor(–): Short to GND	The UHEGO_IN(–) pin is connected to ground.	
	Sensor(+) or sensor(–): Short to UBAT	Either the UHEGO_IN(+) pin or the UHEGO_IN(–) pin is connected to UBAT.	
	Short circuit	The UHEGO_IN(+) pin is connected to the UHEGO_IN(–) pin.	
Error	Shutdown	All channels are set to shutdown mode. This means module functions are disabled.	All channels

Data Sheet

Where to go from here

Information in this section

SC-UHEGO 2/1 Data Sheet.....347
This gives you a complete overview of the module's technical data.

SC-UHEGO 2/1 Configuration Template.....348
You can copy and/or print out the template and use it as a master to document your configuration settings.

SC-UHEGO 2/1 Data Sheet

Technical data

Parameter	Specification [1)]
Identification	Top view 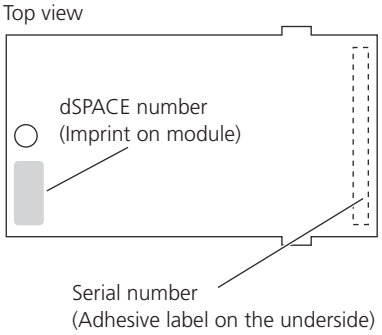 dSPACE number: DS1639
Channels	Two inputs to connect the following Denso lambda probes (software-configurable per channel): ▪ PLUS2.1 ▪ PLUS3.x ▪ PLUS5.0 ▪ PLUS5.1
Software	ConfigurationDesk 1.2.1 or later (on dSPACE Release 5.4 or later) with plug-in software is required.
Diagnostics	▪ Sensor(+): Short to GND ▪ Sensor(–): Short to GND ▪ Sensor (+) or sensor(–): Short to UBAT ▪ Short circuit ▪ Shutdown

Parameter		Specification [1]
Lambda measurement range		Software-configurable ▪ Wide range: AFR 10 … ∞ ▪ Stoichiometric range: AFR 12 … 25
Accuracy		±(2 mV + 2%)
Output voltage range	Analog	0 … 5.3 V
	Digital	TTL voltage level
Input voltage range (on UHEGO_ZDET)		TTL voltage level
Physical size (length x width)		▪ 60 x 31.5 mm (2.36 x 1.24 in.) ▪ Requires one slot

[1] Unless stated otherwise, the specifications are valid only if the dSPACE hardware is correctly powered, switched on, and ready for operation.

Related topics

References

SC-UHEGO 2/1 Configuration Template..... 348

SC-UHEGO 2/1 Configuration Template

Objective

You can use the following template as a master to document the settings of your module.

Identification and location

Enter the following parameters to identify and locate the module unambiguously.

Parameter		Specification	Label Location
Identification	dSPACE number	1639	Top view 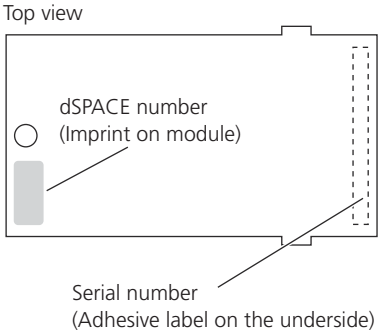
	Serial number		
	Module variant		
Place of installation	System name (unit/stack name)		
	Layer number(s)		

Parameter		Specification	Label Location
	(unit position in a stack)		
	Slot number (slot on the unit's carrier board)		

Software configuration

Enter the settings for each channel in the table below:

Parameter	CH1	CH2
Channel name		
Supported lambda probe		
Lambda measurement range		

Related topics

References

SC-UHEGO 2/1 Data Sheet..... 347

PS-FBD 2/1 Module

Short description

The PS-FBD 2/1 module (DS1661) is a full-bridge power stage module with two channels for driving bidirectional loads such as DC motors. Each channel provides two control inputs and can drive one load connected at the two outputs.

Where to go from here

Information in this section

Module Overview.....352
Information on the module's features, components, and functionality will help you assess its possible uses.

Software Configuration.....357
The PS-FBD 2/1 module provides parameters which are software-configurable via ConfigurationDesk for RapidPro.

Connection to Loads.....360
You can use the PS-FBD 2/1 module to drive bidirectional loads, loads connected to GND or loads connected to UBAT. Dependent on the application, you have to connect the outputs in different ways.

Module in Use.....363
You have access to information (e.g., temperatures on the circuit board) which the module provides during operation.

Data Sheet.....367
The data sheet summarizes the technical data of the PS-FBD 2/1 module; there is also a template that you can use as a master to document your configuration settings.

Module Overview

Where to go from here

Information in this section

Module Features.....352
Module Components and Functionality.....352

Module Features

Main features

The main features of the PS-FBD 2/1 module are:

- Two channels for driving loads
- Outputs can be used as full-bridge, half-bridge, high-side or low-side driver outputs
- Output current: max. 5 A continuous each channel
- Chopper current limitation (software-configurable)
- Current measurement device with configurable 2nd order Butterworth low-pass filter on each channel (can be used as analog current feedback for closed-loop applications).
- Diagnostic functions
- Protection against short-circuit, overtemperature, overvoltage
- Operating voltage: 6 … 40 V

Software

ConfigurationDesk 1.0 (on dSPACE Release 4.2) or later is required to work with the PS-FBD 2/1 module.

More features

For a complete list of the module's features, refer to PS-FBD 2/1 Data Sheet on page 367.

Module Components and Functionality

Objective

The module's components are shown on the basis of its simplified I/O circuit. More detailed descriptions of the components are given if their functions are not clear from the I/O circuit.

I/O Circuit

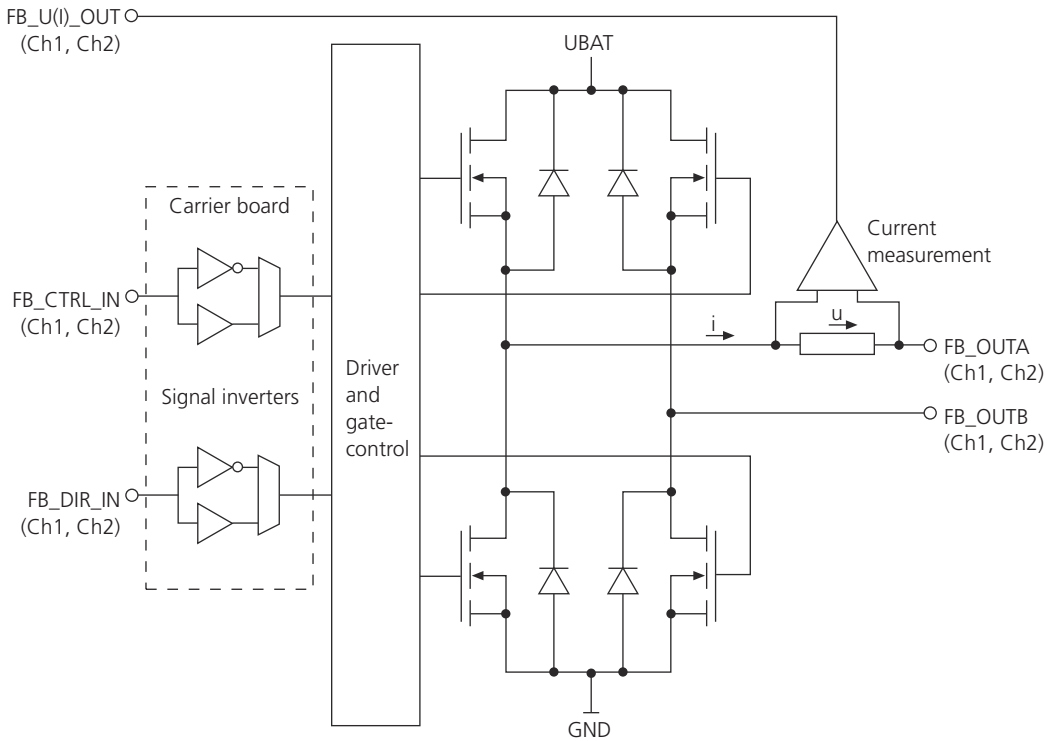

The PS-FBD 2/1 module is based on the Infineon TLE 6209 power H-Bridge.

Note

The module does not work if you connect the module's channels in parallel.

Control inputs (CTRL and DIR)

The power stages are controlled by the inputs FB_DIR_IN and FB_CTRL_IN. The DIR input gives the direction of output current, while the CTRL input controls whether the current is increased (= "1") or reduced (= "0"). You can configure the CTRL mode via ConfigurationDesk for RapidPro.

Signal inverter

The logic level of the control inputs can be inverted by signal inverters, which are integrated on the unit's carrier board. You can configure the signal polarity via ConfigurationDesk for RapidPro. For details, refer to Configuration via ConfigurationDesk for RapidPro on page 357.

Current measurement

Each channel includes a current measurement device with configurable 2nd order Butterworth low-pass filter. The load current is measured via a shunt resistor. Output voltage range, gain and cutoff frequency of the measurement device can be configured via software. The current measurement signal is available at an

output pin. It can be used as an analog current feedback for closed-loop applications.

Note

The behavior of the load current and therefore the behavior of the corresponding current measurement signal strongly depends on the kind of load and the respective control signal. The following table is based on the behavior of resistive loads. It shows the dependencies between the control inputs and the polarity of the current measurement signal.
A load current flowing in the direction as shown by the arrow in the illustration above results in a positive current measurement signal related to zero scale.

Driver Usage	Control Inputs		Operation Mode	FB_OUTA	FB_OUTB	Polarity of Current Measurement Signal
	FB_DIR_IN	FB_CTRL_IN				
Full-bridge driver	0 [1]	1 [2]	0 (slow decay)	High	Low	+ [3]
	0	0		H	H	Freewheel [4]
	1	1		L	H	– [3]
	1	0		H	H	Freewheel
	0	1	1 (fast decay)	H	L	+
	0	0		L	H	–
	1	1		L	H	–
	1	0		H	L	+
Low-side driver	0	1	1 (fast decay)	H	Not used	Freewheel
	0	0		L		–
	1	1		L		–
	1	0		H		Freewheel
High-side driver	0	1	1 (fast decay)	H	Not used	+
	0	0		L		Freewheel
	1	1		L		Freewheel
	1	0		H		+

[1] 0 = logic low level
[2] 1 = logic high level
[3] + means: positive signal related to zero scale. – means: negative signal related to zero scale. Zero scale: 0 V for voltage range –5 V … +5 V and 2.5 V for voltage range 0 … +5 V
[4] Freewheel means, that the direction of the load current depends on the previous direction. In case of inductive loads the direction of the current does not change, however, the value decreases until the state of the control signal changes. In case of resistive loads the value of the load current decreases to zero.

Tip

To scale the output of the current measurement, refer to Scaling the Output Voltages of the Current Measurement Devices on page 365.

Switching status of the power stages

The table below gives an overview on the switching status of the power stages:

Setting	Switching Status of the Power Stages
Slow decay	Slow decay mode 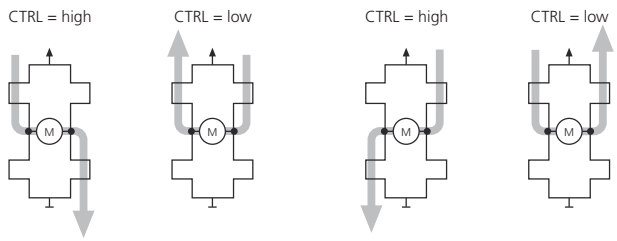
Fast decay	Fast decay mode 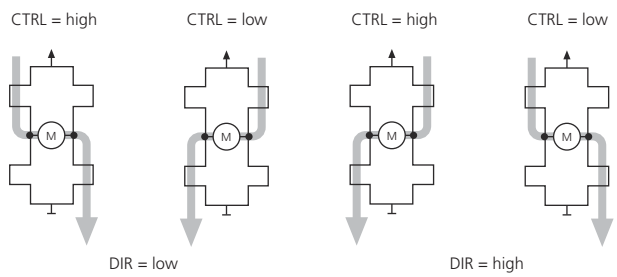

Chopper current limitation

An integrated chopper current limitation limits the output current, for example, to reduce power dissipation, if a DC motor seizes.

As soon as the current limit is reached, the low-side switches off for a fixed time (= chopper off-time). The illustration below shows the time characteristic of the output current if an inductive load is connected.

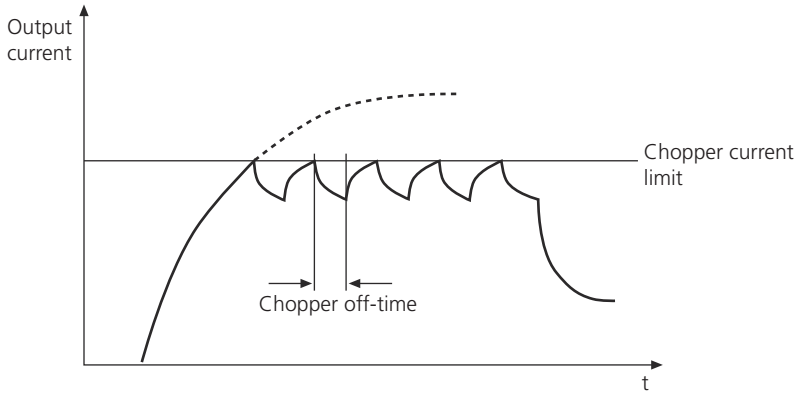

Note

The chopper current limitation is not available if the module is used as a high-side driver.

Restriction of the Power Unit's maximum operating voltage

The maximum possible operating voltage of the Power Unit is restricted to +40 V, if a PS-FBD 2/1 module is installed.

The voltage for putting the module into operation is applied on the Power Unit's power supply inputs UBAT1 (rail 1) and UBAT2 (rail 2). If this voltage is higher than 40 V, the channels of the module which is supplied by the affected rail are deactivated.

Software Configuration

Configuration via ConfigurationDesk for RapidPro

Objective

Various parameters of the module are configurable via ConfigurationDesk for RapidPro.

Software-configurable parameters

Parameter	Range/Setting	Factory Default Setting	Description
Chopper current limit	▪ 4 A ▪ 5 A ▪ 6 A ▪ 7 A	4 A	Defines the maximum output current (current limit) of a channel. For details, refer to Chopper current limitation on page 355.
Chopper switch off time	▪ 24 µs ▪ 43 µs ▪ 62 µs ▪ 80 µs	80 µs	Defines the time period for which the output is switched off, after the current limit has been reached. For details, refer to Chopper current limitation on page 355.
CTRL operating mode	▪ Fast decay ▪ Slow decay	Fast decay	▪ Fast decay: An alternating voltage is generated for the load. ▪ Slow decay: The load is alternately connected between UBAT and GND and shorted with both pins. During short circuit both pins are connected to UBAT.
Current measurement range	▪ ±3.125 A ▪ ±6.25 A	±6.25 A	Defines the range of the current measurement device.
Low-pass filter frequency	▪ 113 Hz ▪ 120 Hz ▪ 150 Hz ▪ 200 Hz ▪ 250 Hz ▪ 300 Hz ▪ 351 Hz ▪ 400 Hz ▪ 451 Hz ▪ 506 Hz ▪ 602 Hz ▪ 805 Hz ▪ 1001 Hz	200 Hz	Defines the cutoff frequency of the 2nd order Butterworth low-pass filter in the current measurement device.

Parameter	Range/Setting	Factory Default Setting	Description
	▪ 1956 Hz ▪ 2967 Hz ▪ 4300 Hz ▪ 5057 Hz ▪ 6139 Hz ▪ 7810 Hz ▪ 10729 Hz		
CTRL input signal polarity	▪ Non-inverted ▪ Inverted	Non-inverted	Polarity of the CTRL control input signal
DIR input signal polarity	▪ Non-inverted ▪ Inverted	Non-inverted	Polarity of the DIR control input signal
Output voltage range	▪ 0 … +5 V ▪ –5 V … +5 V	0 … +5 V	▪ Defines the voltage output range of the current measurement devices. ▪ Configurable globally for both channels of the module. ▪ The output voltage is fixed to 0 … +5 V if the Power Unit is assembled in a stack with UCB.

⚠ WARNING

Choosing the fast-decay mode can cause uncontrolled movements and/or material damage of connected devices.

In fast-decay mode both input signals (FB_DIR_IN and FB_CTRL_IN) are set to low level if you build a Simulink model without connecting PWM signals to the full-bridge. This means, that a connected motor starts if you download your application and no PWM signals are connected to the module inputs.

To avoid risk of injury and material damage:

- When building the Simulink model, think through the effects of the connections you are planning and the settings of the modules.
- Ensure that no one is in the potential danger zone of the device (test bench, etc.) when the changes first take effect.

Storage of the signal polarity settings

The signal polarity settings (CTRL and DIR input) are stored on the hardware as follows:

- *Using ConfigurationDesk 1.1 and later:*

  The signal polarity settings are stored on the module. If you mount the PS-FBD 2/1 module in another unit, the settings you made previously are still set.

- *Using ConfigurationDesk 1.0:*
  The signal polarity settings are stored on the unit's carrier board. They do not change if you replace the PS-FBD 2/1 module by another PS-FBD 2/1 module.

Related topics

References

PS-FBD 2/1 Configuration Template..... 369

Connection to Loads

Objective

You can use the PS-FBD 2/1 module to drive bidirectional loads, loads connected to GND or loads connected to UBAT. Dependent on the application, you have to connect the outputs differently.

Where to go from here

Information in this section

Driving Bidirectional Loads.....360
Driving Loads Connected to GND.....361
Driving Loads Connected to UBAT.....361

Driving Bidirectional Loads

Usage as full-bridge driver

If you want to drive bidirectional loads, like DC motors, you must use the PS-FBD 2/1 module as a full-bridge driver. To do this, connect the load to both outputs (FB_OUTA and FB_OUTB).

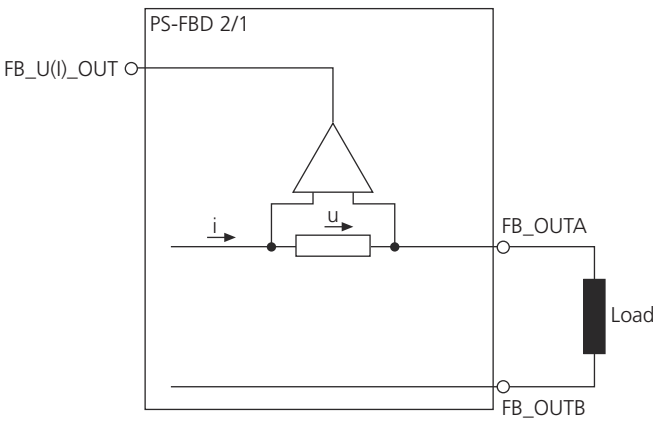

Note

Do not connect the module's channels in parallel, as the module will not work.

Driving Loads Connected to GND

Usage as high-side driver

If you want to drive loads that are connected to GND, like valves, relays, ignition coils, heating elements, etc., you can use the PS-FBD 2/1 module as a high-side driver. To do this, connect the load to FB_OUTA and GND.

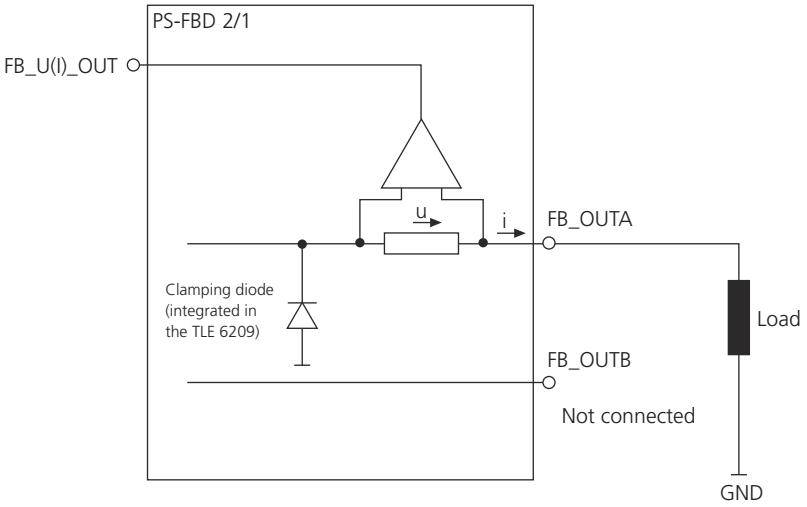

Note

Do not connect the module's channels in parallel, as the module will not work.

Driving Loads Connected to UBAT

Usage as low-side driver

If you want to drive loads that are connected to UBAT, like valves, relays, ignition coils, heating elements, etc., you can use the PS-FBD 2/1 module as a low-side driver. To do this, connect the load to UBAT and FB_OUTA.

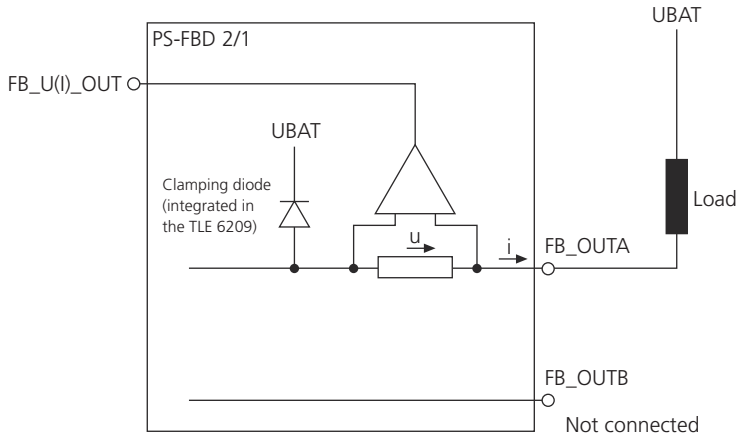

Note

Do not connect the module's channels in parallel, as the module will not work.

Module in Use

Objective

During operation you can access status information of the PS-FBD 2/1 module via ConfigurationDesk for RapidPro. The module provides:

- Permanent monitoring of the channel outputs of the module
- Diagnostic messages about the status of the module and the status of the connection to external devices

Where to go from here

Information in this section

Monitoring.....363
Diagnostics.....363
Scaling the Output Voltages of the Current Measurement Devices.....365

Monitoring

Monitored parameters

The PS-FBD 2/1 provides monitoring of the following parameter:

Parameter	Description	Valid
Temperature	The temperature is measured via a sensor on the module's circuit board. The monitored temperature serves for troubleshooting purposes.	For the module

Diagnostics

Diagnostic warnings and diagnostic errors

The diagnostic messages can be divided into warnings and errors.

- Diagnostic warnings occur if a fault, such as "Open load", is detected. Each warning is dropped as soon as the reason for it is removed.
- Diagnostic errors cause the module functions to be disabled (= shutdown). If a diagnostic error occurs, you have to remove the source of the error and reset the module's diagnostics via ConfigurationDesk for RapidPro.

Note

Depending on where a PS-FBD 2/1 module is inserted (slot 1 … 3 of rail 1, or slot 4 … 6 of rail 2), the corresponding front I/O connector of the Power Unit must be connected to the power supply. Otherwise you get unpredictable diagnostic messages.

Precondition to get diagnostic messages

ConfigurationDesk for RapidPro can receive diagnostic messages about channels sent by the RapidPro modules only if the RapidPro system is in execution mode. For further information, refer to Basics on the Display of Diagnostic Messages (ConfigurationDesk for RapidPro - Guide 🕮).

Possible diagnostic messages

Diagnostic Message		Description	Valid
Warning	Open load	No load is connected to the output. Note: The open load condition always occurs if the load current does not reach the minimum value specified in the TLE 6209 data sheet for a defined time. This can happen, for example: ▪ With large inductive loads and/or too large PWM frequencies and/or too small PWM duty cycles ▪ In case of resistive loads with high resistance values ▪ In high-side driver mode For further information, refer to the TLE 6209 data sheet from Infineon.	Per channel
	Temperature prewarning	The temperature measured at the TLE 6209 power H-Bridge is in the range 120 °C … 160 °C (248 °F … 320 °F).	
	Temperature warning	The temperature measured at the TLE 6209 power H-Bridge is in the range 140 °C … 180 °C (284 °F … 356 °F).	

Diagnostic Message		Description	Valid
Error	Short to GND	The output is connected to GND. The affected channel is set to shutdown mode.	Per channel
	Short to Vs [1] or across the load	The output is connected to the positive pole of the power supply, or the two outputs are connected to each other. The affected channel is set to shutdown mode.	
	Overheat	The temperature measured at the TLE 6209 power H-Bridge is higher than 180 °C (356 °F). The affected channel is set to shutdown mode.	
	Shutdown	This message indicates that the output drivers of a channel have been disabled: ▪ Due to a malfunction ▪ If the enable/disable input on their rear connector of a single Power Unit is disabled	

[1] Vs = UBAT

Scaling the Output Voltages of the Current Measurement Devices

Objective

The module's current measurement devices provide voltages as measurement results. You need to scale these voltages to get the current values.

Formulas to scale the voltages on the rear I/O connectors

The values of the scaling formula and the formula itself depend on the settings of the module. The gain value is a result of the settings Output Voltage Range and Current Measurement Range. You can use the following formulas to scale the voltages on the specific rear connector pins of a Power Unit used as single unit.

Output Voltage Range	Current Measurement Range	Gain	Scaling Formula
0 … 5 V	± 6.25 A	2.5 A/V	$I_{FB_U(I)_OUT}$ = 2.5 A/V x FB_U(I)_OUT – 6.25 A
	± 3.125 A	1.25 A/V	$I_{FB_U(I)_OUT}$ = 1.25 A/V x FB_U(I)_OUT – 3.125 A
– 5 V … + 5 V [1]	± 6.25 A		$I_{FB_U(I)_OUT}$ = 1.25 A/V x FB_U(I)_OUT
	± 3.125 A	0.625 A/V	$I_{FB_U(I)_OUT}$ = 0.625 A/V x FB_U(I)_OUT

[1] Only adjustable if the module is installed in a Power Unit that is used as single unit.

Formula for the RPCU_ADC_BLx block

If the PS-FBD 2/1 module is installed in a Power Unit that is used in a RapidPro stack with UCB, the current measurement output is represented by the output of

the RPCU_ADC_BLx block of the RTI RapidPro Control Unit Blockset. You can use the following formulas to get the current values.

Output Voltage Range	Current Measurement Range	Scaling Formula
0 … 5 V	± 6.25 A	$I_{MUX_ADC_out}$ = 12.5 A x MUX_ADC_out – 6.25 A
	± 3.125 A	$I_{MUX_ADC_out}$ = 6.25 A x MUX_ADC_out – 3.125 A

For further information, refer to Basics on A/D Conversion (RapidPro System – I/O Subsystem MPC565 Implementation Features 🕮).

Related topics

References

PS-FBD 2/1 Data Sheet..... 367
RPCU_ADC_BLx (RapidPro System – I/O Subsystem MPC565 RTI Reference 🕮)

Data Sheet

Where to go from here

Information in this section

PS-FBD 2/1 Data Sheet.....367
This gives you a complete overview of the module's technical data.

PS-FBD 2/1 Configuration Template.....369
You can copy and/or print out the template and use it as a master to document your configuration settings.

PS-FBD 2/1 Data Sheet

Technical data

Parameter	Specification [1)]
Identification	Top view 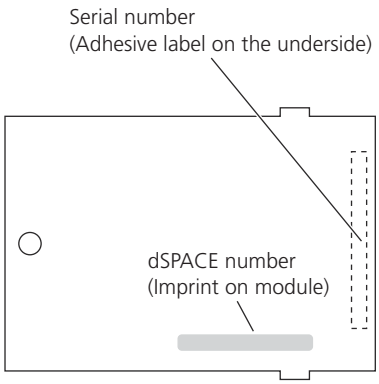 dSPACE number: DS1661
Channels	2 independent power stage channels. Each channel can be used as: ▪ Full-bridge driver output ▪ Half-bridge driver output ▪ High-side driver output ▪ Low-side driver output
Software	ConfigurationDesk 1.0 (on dSPACE Release 4.2) or later is required
Diagnostics	Open load, temperature prewarning, temperature warning, short to GND, short to Vs or across the load, overheat, shutdown

Parameter		Specification [1]
Output current	Max. value [2]	▪ 5 A continuous per channel ▪ 7 A peak per channel
	Current limitation	4 A, 5 A, 6 A, 7 A (software-configurable)
	Switch-off time	24 µs, 43 µs, 62 µs, 80 µs (software-configurable)
Output resistance Ri		▪ ≈ 290 mΩ typ. @ +25 °C (+77 °F) [3] ▪ ≈ 570 mΩ max.
Operating voltage [4]		6 … 40 V
CTRL and direction control	CTRL operation mode	Fast decay, slow decay (software-configurable)
	CTRL input signal polarity	Inverted, non-inverted (software-configurable)
	DIR input signal polarity	Inverted, non-inverted (software-configurable)
Maximum switching frequency		Refer to the switching time and delay time parameters [5]
Switching time	High side rise time	1.8 µs typ.; 3.5 µs max.
	High side fall time	0.2 µs typ.; 0.8 µs max.
	Low side rise time	6.5 µs typ.; 11 µs max.
	Low side fall time	4.3 µs typ.; 6.5 µs max.
Delay time	High side "ON"	4 µs typ.; 10 µs max.
	High side "OFF"	0.6 µs typ.; 1 µs max.
	Low side "ON"	2.0 µs typ.; 3.5 µs max.
	Low side "OFF"	2.5 µs typ.; 4 µs max.
Current measurement device	Voltage output range	0 … +5 V, –5 V … +5 V (software-configurable)
	Measurement range	±3.125 A, ±6.25 A (software-configurable)
	Absolute measurement error [6]	Typ. ±2% gain, ±100 mA offset error @ UBAT = 12 V
	Filter	▪ 2nd order low-pass filter (per channel) ▪ Butterworth characteristic ▪ –3 dB cutoff frequency (software-configurable)
Isolation		Level shifter: to eliminate ground potential differences between dSPACE RCP system (like MicroAutoBox) and the RapidPro Power Unit

Protection		▪ Overload protection
		▪ Overtemperature protection
		▪ Short-circuit protection to ground, UBAT and across the load
		▪ Integrated on carrier board:
		  ▪ Load dump protection up to +100 V
		  ▪ Reverse voltage protection up to –100 V

Physical size (length x width)		▪ 60 x 42 mm (2.36 x 1.65 in.)

Parameter	Specification [1]
	▪ Requires one slot

[1] Unless stated otherwise, the specifications are valid only if the dSPACE hardware is correctly powered, switched on, and ready for operation.
[2] Depends on the Power Unit the module is mounted in. The total output capacity of the RapidPro system depends on the modules used and the assembly (single unit or stack). It is limited by the thermal capacity of the housing. As long as the maximum housing temperature T_Housing = +95 °C (+203 °F) is not exceeded, the function of the RapidPro system is guaranteed.
[3] For the all-in resistance of the system you must add the modul's Ri to the Power Unit's output resistance.
[4] The voltage for putting the module into operation is applied on the Power Unit's power supply inputs UBAT1 (rail 1) and UBAT2 (rail 2). For further information, refer to Calculating the Maximum Permissible Rail Supply Voltage on page 125.
[5] The maximum switching frequency depends mainly on the switching characteristic of the power stage. Different output characteristics for rising and falling edges will distort the duty cycle of the generated PWM signal. Therefore, it is strongly recommended to measure and verify the resulting duty cycle at the desired switching frequency to make sure that the duty cycle distortion can be accepted.
[6] Typical value at T_Housing = +25 °C (+77 °F) unless otherwise stated.

PS-FBD 2/1 Configuration Template

Objective

You can use the following template to document the settings of your module.

Identification and location

Enter the following parameters to identify and locate the module unambiguously.

Parameter		Specification	Label Location
Identification	dSPACE number	1661	Top view 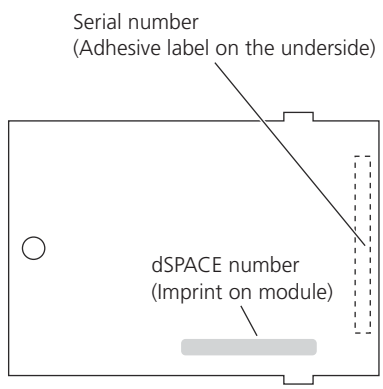
	Serial number		
	Module variant		
Place of installation	System name (unit/stack name)		
	Layer number(s) (unit position in a stack)		
	Slot number (slot on the unit's carrier board)		

Software configuration

Enter the settings for each channel in the table below:

Parameter	CH1	CH2
Channel name		
Output voltage		
Chopper current limit		
Chopper off-time		
CTRL operation mode		
Current measurement range		
Low-pass filter frequency		
CTRL input		
DIR input		

PS-HSD 6/1 Module

Short description

The PS-HSD 6/1 (DS1663) is a high-side driver power stage module that provides 6 channels to switch loads to UBAT that are connected on the other side to GND. The module can drive loads such as valves, relays, ignition coils, heating elements, and lamps.

Where to go from here

Information in this section

Module Overview.....372
Information on the module's features, components, and functionality will help you assess its possible uses.

Software Configuration.....375
The PS-HSD 6/1 module provides parameters which are software-configurable via ConfigurationDesk for RapidPro.

Hardware Configuration.....377
The PS-HSD 6/1 module provides user-configurable circuits to add electronic components (resistors, capacitors) to the output circuits of the module.

Connection to Loads.....385
When you drive loads connected to GND there are points (i.e., loaddump protection) to note.

Module in Use.....388
You have access to information (i.e., temperatures on the circuit board) which the module provides during operation.

Data Sheet.....391
The data sheet summarizes the technical data of the PS-HSD 6/1 module; there is also a template that you can use as a master to document your configuration settings.

Module Overview

Where to go from here

Information in this section

Module Features.....372
Module Components and Functionality.....372

Module Features

Main features

The main features of the module are:

- 6 high-side driver outputs to switch loads to UBAT that are connected on the other side to GND
- Output current:
  - 4 channels with max. 5 A each
  - 2 channels with max. 1 A each
- Current measurement on two channels simultaneously with passive first-order low-pass filter (hardware-configurable)
- Output clamping by power switches (approx. 0 V) to prevent overvoltages when inductive loads are switched.
- Diagnostic functions
- Protection against short circuit, overtemperature, overvoltage
- Operating voltage: 6 … 36 V

Software

ConfigurationDesk 1.0 (on dSPACE Release 4.2) or later is required to work with the PS-HSD 6/1 module.

More features

For a complete list of the module's features, refer to PS-HSD 6/1 Data Sheet on page 391.

Module Components and Functionality

Objective

The module's components are shown on the basis of its simplified I/O circuit. More detailed descriptions of the components are given if their functions are not clear from the I/O circuit.

I/O circuit

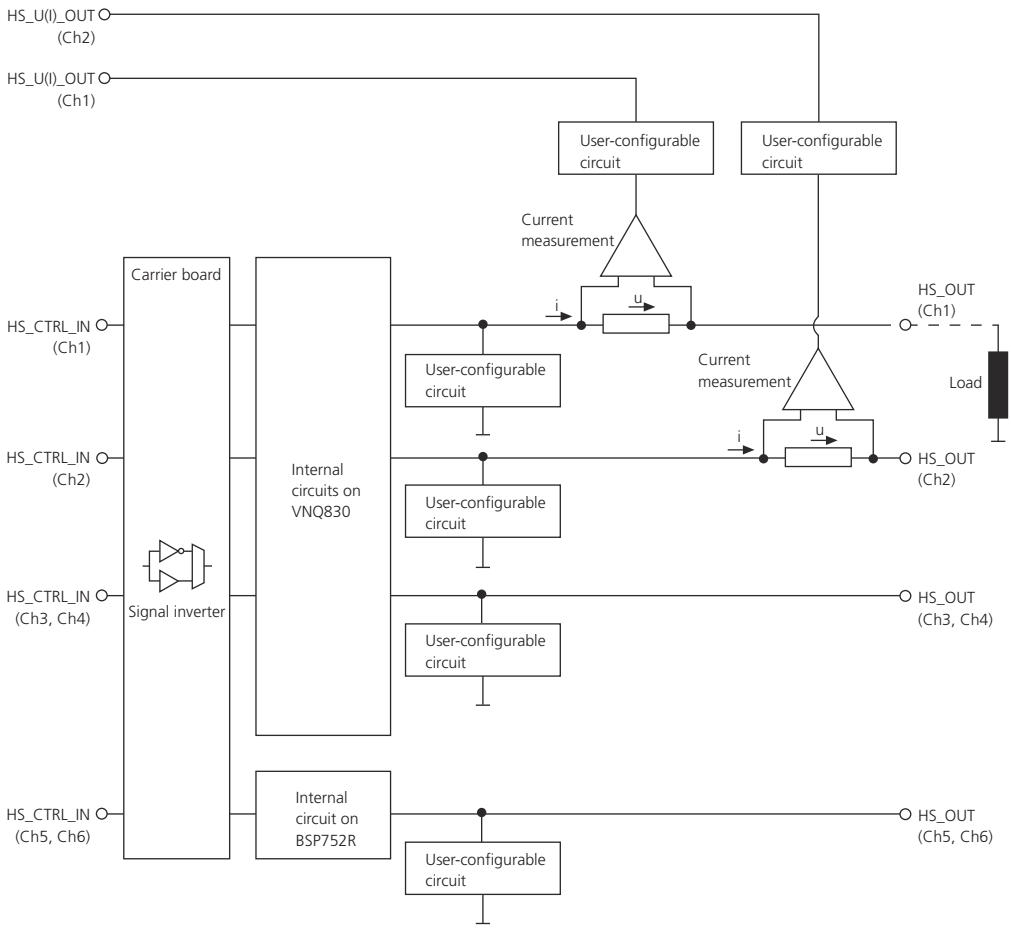

Channels 1 … 4 are based on the VNQ830 quad channel high-side driver from STMicroelectronics. Channels 5 and 6 are each based on the BSP752R smart power high side switch from Infineon.

User-configurable circuits

Additional components (resistors, capacitors) can be connected to adapt each channel to different loads and to configure the current measurement devices. For example, you can configure:

- A damping circuit for each channel
- The cutoff frequency of the current measurement devices

For detailed information on configuring the user-configurable circuits, refer to Overview of User-Configurable Circuit on page 377.

Current measurement

The current measurement can be used as an analog current feedback for closed-loop applications. The signals are available at the outputs HS_U(I)_OUT for channel 1 and channel 2.

The load current is measured via a shunt resistor. A load current flowing in the direction shown by the arrow in the illustration above results in a positive current measurement signal related to zero scale.

The two current measurement outputs have each a configurable passive first-order low-pass filter.

Signal inverter

The logic level of the inputs can be inverted by signal inverters, which are integrated on the unit's carrier board. You can configure this signal polarity via ConfigurationDesk for RapidPro. For details, refer to Configuration via ConfigurationDesk for RapidPro on page 375.

Restriction of the Power Unit's maximum operating voltage

The maximum possible operating voltage of the Power Unit is restricted to +36 V, if a PS-HSD 6/1 module is installed.

The voltage for putting the module into operation is applied on the Power Unit's power supply inputs UBAT1 (rail 1) and UBAT2 (rail 2). If this voltage is higher than 36 V, the channels of the module which is supplied by the affected rail are deactivated.

Related topics

References

Overview of User-Configurable Circuit..... 377

Software Configuration

Configuration via ConfigurationDesk for RapidPro

Objective

Various parameters of the module are configurable via ConfigurationDesk for RapidPro. In addition, the software provides module-specific edit fields to document the values of the soldered components of the user-configurable circuit. This information on the hardware is stored on the module.

Software-configurable parameter

Parameter	Range/Setting	Factory Default Setting	Comment	Valid
Signal polarity	Non-inverted	Non-inverted	The polarity of the input signal is not inverted: A *high* input signal switches the connected load to UBAT.	Per channel
	Inverted		The polarity of the input signal is inverted: A *low* input signal switches the connected load to UBAT.	

Storage of the signal polarity settings

The signal polarity setting (CTRL) is stored on the hardware as follows:

- *Using ConfigurationDesk 1.1 and later:*

  The signal polarity setting is stored on the module. If you mount the PS-HSD 6/1 module in another unit, the setting you made previously is still set.
- *Using ConfigurationDesk 1.0:*

  The signal polarity setting is stored on the unit's carrier board. It do not change if you replace the PS-HSD 6/1 module by another PS-HSD 6/1 module.

Hardware information

You can enter information about the user-configurable circuit on the module-specific properties dialog. The information is stored on the module as reminder and does not affect the channel's behavior.

The following table shows the relation between the parameter names used in ConfigurationDesk for RapidPro and the names of the components used in the user-configurable circuit:

Parameter in ConfigurationDesk for RapidPro	Components in the Output Circuit	Description	Valid
External clamping diode	D11 … D61	You can edit if the module's circuit board is equipped with an additional clamping diode or not.	Per channel
Damping resistor	R11 … R61	You can edit the component values of the snubber network, used to suppress high frequency ringing which might occur when switching off the load.	
Damping capacitor	C11 … C61		
Low-pass filter frequency	C12/R12 (for Ch1)	You can edit the value of the –3 dB cutoff frequency of the current measurement filter (in Hz).	Only for channel 1 and channel 2
	C22/R22 (for Ch2)		

If the components were soldered by dSPACE according to your order, the specific values are already stored.

For a detailed circuit illustration, refer to Overview of User-Configurable Circuit on page 377.

Related topics

References

PS-HSD 6/1 Configuration Template..... 393

Hardware Configuration

Objective

Additional electronic components can be added to each channel to adapt it to the specifics of your application. The module provides solder pads where you can solder components like resistors, capacitors, or diodes in user-configurable circuits.

Where to go from here

Information in this section

Overview of User-Configurable Circuit.....377
Solder Pads and Component Requirements.....379
Using a Clamping Diode.....381
Configuring the Low-Pass Filter for Current Measurement.....383

Overview of User-Configurable Circuit

Objective

Each channel of the module provides user-configurable circuits. This is to adapt it to different loads.

Overview of the user-configurable circuit

The illustration below shows the user-configurable circuits in detail. All the components are shown and indicated.

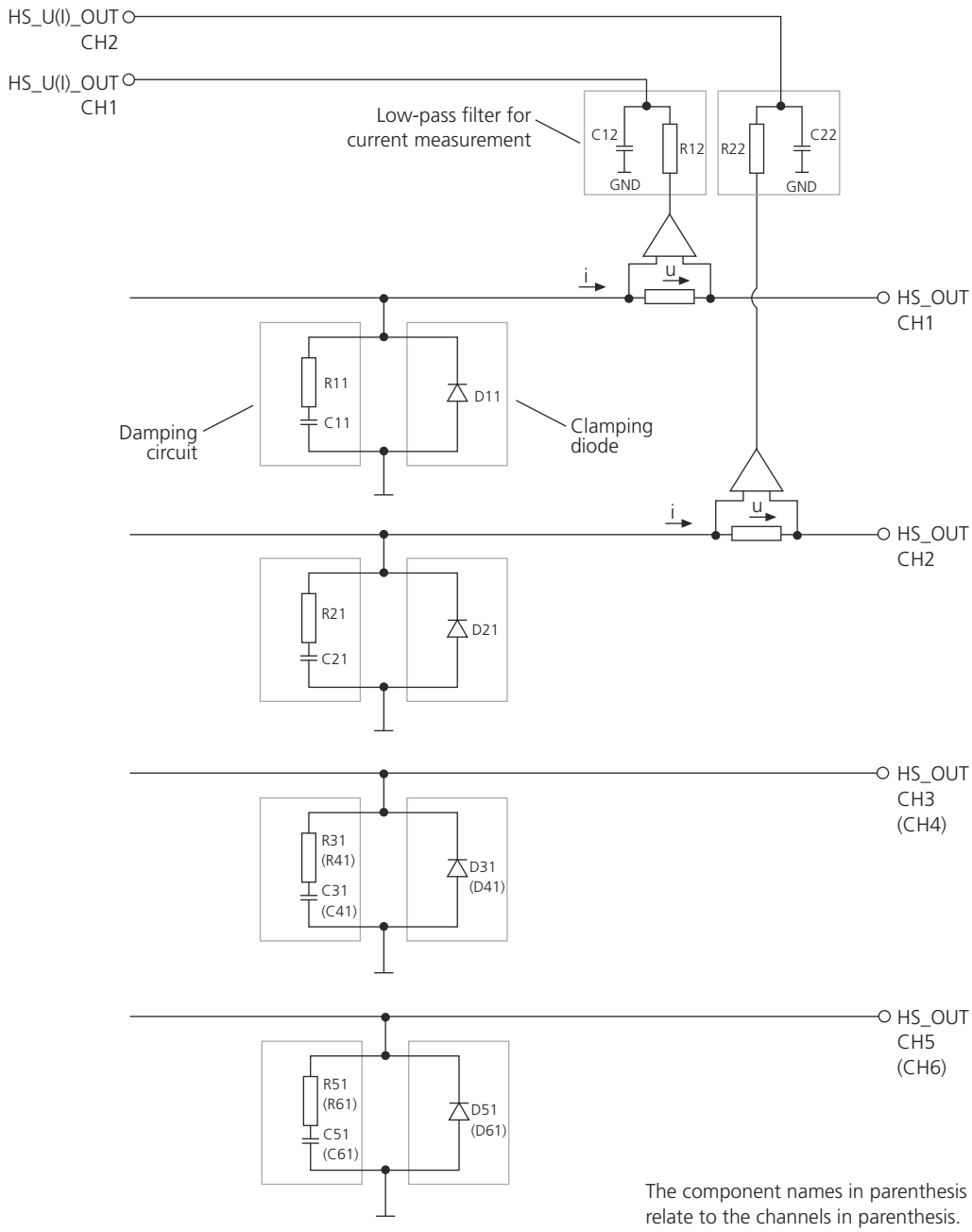

The component names in parenthesis relate to the channels in parenthesis.

Clamping diode

The PS-HSD 6/1 module provides clamping diodes to set the clamping voltage to approx. 0 V. These diodes act as free-wheeling diodes. Without them, the clamping voltages UBAT – 48 V (channel 1 … 4) and UBAT – 63 V (channel 5 and 6) are valid. For further information, refer to Using a Clamping Diode on page 381.

Low-pass filter for current measurement

You can configure the cutoff frequency of the first-order low-pass filters for each current measurement channel by soldering resistors and capacitors. For examples of possible component values for specific cutoff frequencies, refer to Configuring the Low-Pass Filter for Current Measurement on page 383.

Damping circuit

You can configure a snubber circuit for each channel by soldering resistors and capacitors onto the module. This is to prevent high-frequency ringing which might occur when loads are switched off.

Factory default settings

The settings depend on your order as follows:

- If you did not specify components in your order, the user-configurable circuit of each channel is equipped with:
  - C12 = 4.7 nF, and R12 = 4.7 kΩ
  - C22 = 4.7 nF, and R22 = 4.7 kΩ
- If you specified components in your order, these were soldered by dSPACE.

Hardware information in ConfigurationDesk for RapidPro

ConfigurationDesk for RapidPro provides a module-specific properties dialog where you can edit the values of the soldered components as reminders for each channel on the module.

For the relevant parameters, refer to Hardware information on page 375.

Related topics

Basics

Changing the Hardware Configuration of SC/PS Modules (RapidPro System Hardware Installation Guide 🕮)
Changing the Installation of SC/PS/COM Modules (RapidPro System Hardware Installation Guide 🕮)

References

Configuration via ConfigurationDesk for RapidPro..... 375
PS-HSD 6/1 Configuration Template..... 393

Solder Pads and Component Requirements

Objective

The PS-HSD 6/1 module provides solder pads to add components on the module's circuit board.

Positions of solder pads

The following illustration shows the topside of the module, containing the positions of the solder pads for the user-configurable circuits.

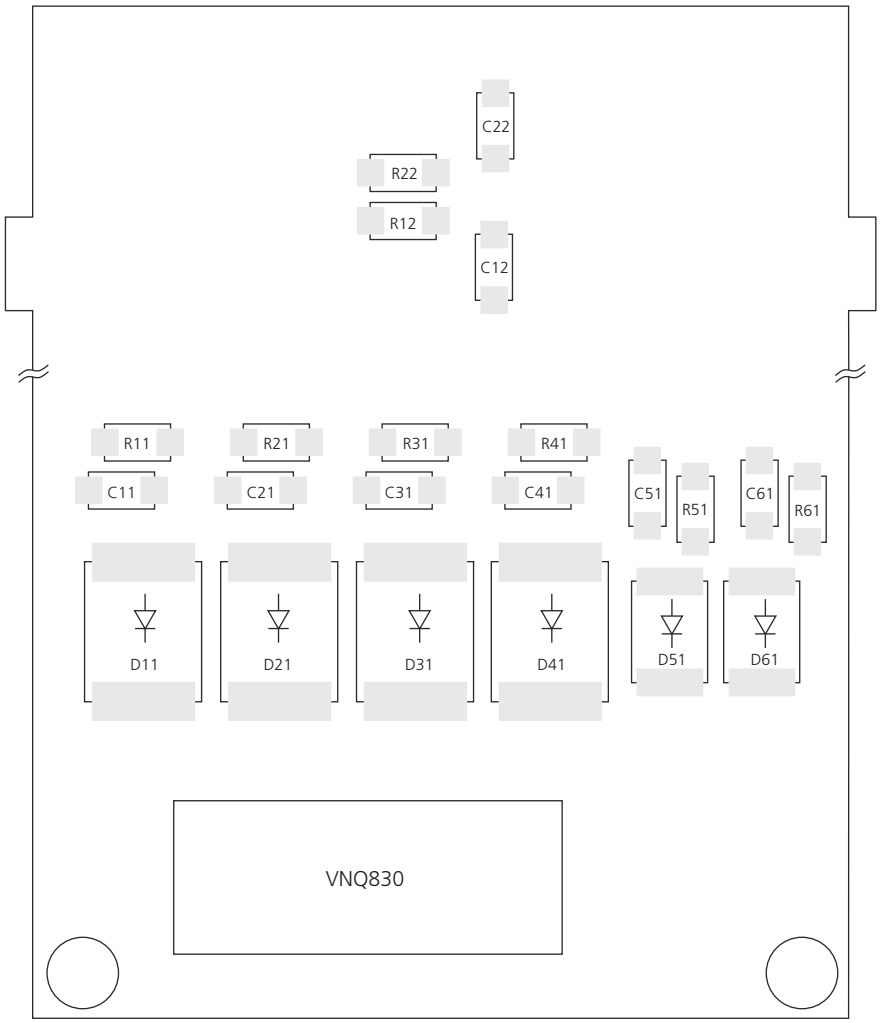

Component requirements

The following table gives information on the components that you can solder onto the module:

Component		Package Type	Other Requirements
D11 … D41	Diode	SMC	▪ The clamping diodes are polarized. The polarity stated in the illustration above must not be changed. ▪ You must ensure that only low-leakage diodes are used to avoid malfunctions of the module's diagnostic functions especially at high temperatures.
D51, D61		SMB	

Component		Package Type	Other Requirements
R11 … R61	Resistor	1206	–
R12, R22			Must be in the range 2 kΩ … 200 kΩ.
C11 … C61	Capacitor	1206	–
C12, C22			Must be a ceramic type of NPO/COG or X7R.

Related topics

Basics

Changing the Hardware Configuration of SC/PS Modules (RapidPro System Hardware Installation Guide 🕮)
Changing the Installation of SC/PS/COM Modules (RapidPro System Hardware Installation Guide 🕮)

References

Configuration via ConfigurationDesk for RapidPro..... 375
PS-HSD 6/1 Configuration Template..... 393

Using a Clamping Diode

Objective

The PS-HSD 6/1 module provides clamping diodes (freewheeling diodes) to achieve clamping voltages of approx. 0 V per channel. Without these diodes, you get clamping voltages of UBAT – 48 V (channels 1 … 4) and UBAT – 63 V (channels 5 and 6).

I/O circuit of a single channel

The following illustration shows the simplified I/O circuit of a single channel:

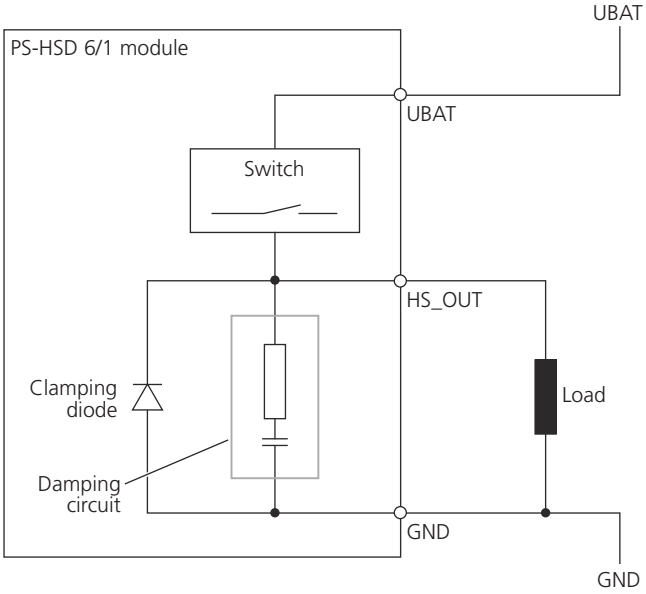

Examples of type designations

The following table lists the types of clamping diodes which are installed by default:

Channel	Diode	Recommended Type	Comment
1	D11	MBRS360	When choosing a comparable type, you must ensure that only low-leakage diodes are used to avoid failure of module diagnostic functions.
2	D21		
3	D31		
4	D41		
5	D51	MBRS1540	
6	D61		

Note

The clamping voltage varies depending on the temperature, the type of the diode and the current flowing through the diode.

Related topics

Basics

Changing the Hardware Configuration of SC/PS Modules (RapidPro System Hardware Installation Guide 🕮)
Changing the Installation of SC/PS/COM Modules (RapidPro System Hardware Installation Guide 🕮)

References

Configuration via ConfigurationDesk for RapidPro..... 375

Configuring the Low-Pass Filter for Current Measurement

Objective

To use the current measurement as an analog current feedback, equip each current measurement output with a first-order low-pass filter. You can configure the –3 dB cutoff frequency for each filter by soldering resistors and capacitors.

Calculating the cutoff frequency

The cutoff frequency fg of the low-pass filters is easy to calculate with the formula below. Here it is shown for the HS_U(I)_OUT channel 1 circuit:

$$fg_{HS_U(I)_OUT\ Ch1} = \frac{1}{2 \times \pi \times R12 \times C12}$$

Assignment of the components

The illustration below shows the components and their assignment to the measurement outputs:

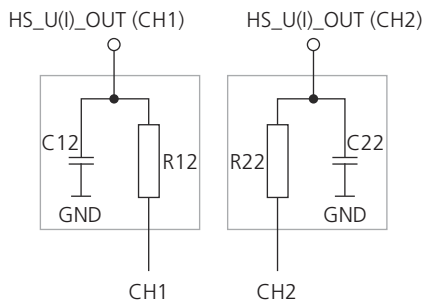

Example values

The following table shows standardized component values for different cutoff frequencies:

Cutoff Frequency fg	Resistor R	Capacitor C
10 Hz	160 kΩ	100 nF
20 Hz	82 kΩ	100 nF
50 Hz	68 kΩ	47 nF
100 Hz	16 kΩ	100 nF
200 Hz	24 kΩ	33 nF
500 Hz	6.8 kΩ	47 nF
1 kHz	16 kΩ	10 nF
1.5 kHz	16 kΩ	6.8 nF
2 kHz	24 kΩ	3.3 nF
3 kHz	16 kΩ	3.3 nF
4 kHz	12 kΩ	3.3 nF
5 kHz	6.8 kΩ	4.7 nF

Note

The resistor value must be in the range 2 kΩ … 200 kΩ.

Related topics

Basics

Changing the Hardware Configuration of SC/PS Modules (RapidPro System Hardware Installation Guide 🕮)
Changing the Installation of SC/PS/COM Modules (RapidPro System Hardware Installation Guide 🕮)

References

Configuration via ConfigurationDesk for RapidPro..... 375

Connection to Loads

Objective

You can use the PS-HSD 6/1 module to drive loads connected to GND.

Where to go from here

Information in this section

Driving Loads.....385
Output Behavior Depending on the Signal Polarity Parameter.....386

Driving Loads

Objective

The load of a high-side driver channel must be connected at one side to GND. Additionally, you have to consider the load dump protection of the output channels.

Connection example

The load must be connected as shown in the illustration below.

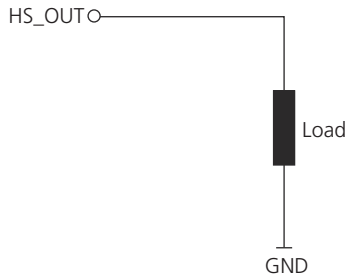

Load dump protection

The carrier board of the Power Unit is equipped with load dump protection. This also protects the power output channels in case of short overvoltage pulses.

Determining the max. load dump voltage

To determine the maximum load dump voltage, you have to use the actual load resistance and the current as function of the time.

For detailed information, refer to the data sheets of the VNQ830 from STMicroelectronics and the BSP752R from Infineon.

Output Behavior Depending on the Signal Polarity Parameter

Objective

Using the signal generation (PWM or bit I/O) with the above mentioned modules can cause unintended movements and/or material damage of connected devices in specific operating modes. You have to note the effects which the module's input signal can have on the connected load.

Current output on the load

In the following the interaction between input and output is shown, using a Control Unit (I/O subsystem with MPC565) with the RapidPro RTI Blockset.

The descriptions also apply to all other fields of application where RapidPro hardware and signal generation (PWM or bit I/O) are involved, such as a single RapidPro unit connected to MicroAutoBox using implementation software (RTLib, etc.).

The duty cycle setting you make in your Simulink® model with the RapidPro RTI Blockset and the signal polarity set with ConfigurationDesk for RapidPro take effect on the connected load.

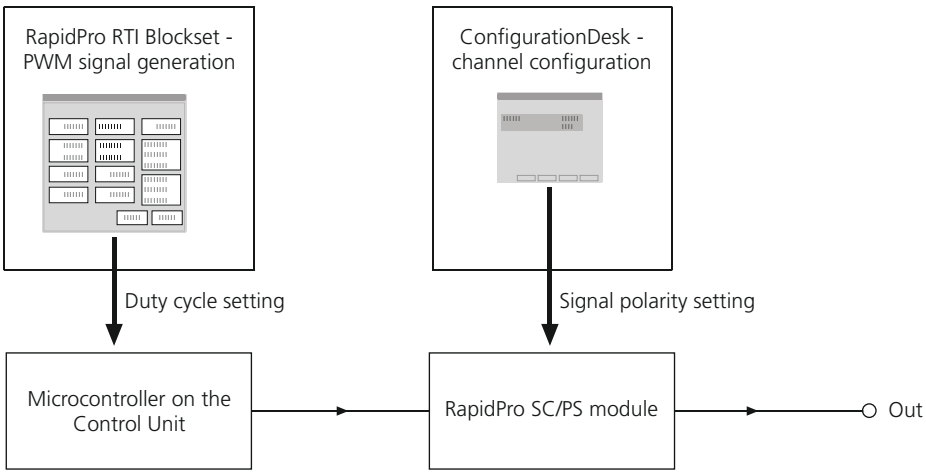

The following table shows the effect of the selected duty cycle to the connected load:

Duty Cycle	Signal Polarity	Output Current
"0"	Non-inverted	HS_OUT ○ Load No current GND
"1"	Inverted	

Duty Cycle	Signal Polarity	Output Current
"1"	Non-inverted	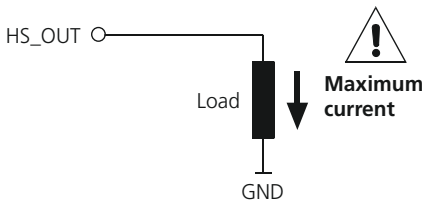
"0"	Inverted	

Module in Use

Objective

During operation you can access status information of the PS-HSD 6/1 module via ConfigurationDesk for RapidPro. The module provides:

- Permanent monitoring of the module's temperature
- Diagnostic messages about the status of the module and the status of the connection to external devices

Where to go from here

Information in this section

Monitoring.....388
Diagnostics.....388

Monitoring

Monitored parameters

The PS-HSD 6/1 provides monitoring of the following parameter:

Parameter	Description	Valid
Temperature	The temperature is measured on the module's circuit board. It serves for troubleshooting purposes.	For the module

Diagnostics

Diagnostic warnings and diagnostic errors

The diagnostic messages can be divided into warnings and errors.

- Diagnostic warnings occur if a fault, such as "Open load", is detected. Each warning is dropped as soon as the reason for it is removed.
- Diagnostic errors cause the module functions to be disabled (= shutdown). If a diagnostic error occurs, you have to remove the source of the error and reset the module's diagnostics via ConfigurationDesk for RapidPro.

Note

Depending on where a PS-HSD 6/1 module is inserted (slot 1 … 3 of rail 1, or slot 4 … 6 of rail 2), the corresponding front I/O connector of the Power Unit must be connected to the power supply. Otherwise you get unpredictable diagnostic messages.

Precondition to get diagnostic messages

ConfigurationDesk for RapidPro can receive diagnostic messages about channels sent by the RapidPro modules only if the RapidPro system is in execution mode. For further information, refer to Basics on the Display of Diagnostic Messages (ConfigurationDesk for RapidPro - Guide 🕮).

Possible diagnostic messages

Diagnostic Message		Malfunction	Description	Valid
Warning	Open load or other malfunction [1]	Undervoltage	UBAT is lower than 5.5 V.	Channel 1 … 4
		Overload	The overload condition occurs, if there is: ▪ Short to GND ▪ The resistance of the connected load is too small or shorted. For further information, refer to the data sheet of the BSP752 from Infineon.	Channel 5 … 6
		Short to supply	The output is connected to the positive pole of the power supply.	
		Open load	No load is connected to the output (see: Restrictions in open load detection on page 389).	All channels
		Overheat	The temperature of a specific channel has reached a critical value.	
		Short to GND	The output is connected to GND.	
	Shutdown	–	This message indicates that the output drivers of the module have been disabled. This can happen, for example, if the ENABLE pin of the single unit is disabled.	

[1] The output drivers of a channel are disabled due to a malfunction. If you eliminate the source of error that causes the diagnostic message, the channel is reactivated.

Restrictions in open load detection

- The open load condition always occurs if the load current does not exceed the minimum value within a defined time. This delay time consists of a chip-specific time (specified in the data sheets of the high-side driver ICs VNQ830 and BSP752) and module-specific time of 200 µs. The open load condition can occur, for example:
  - With large inductive loads and/or too large PWM frequencies and/or too small PWM duty cycles
  - With resistive loads with high resistance values

  For further information, refer to the data sheets of the high-side driver ICs.
- Channel 1 … 4: An open load can be only detected if a PWM signal or a high level signal is connected to the inputs of the channels 1 … 4.

- Channel 5 and channel 6: An open load can be only detected if a PWM signal or a low level signal is connected to the inputs of channel 5 or 6.

Data Sheet

Where to go from here

Information in this section

PS-HSD 6/1 Data Sheet.....391
This gives you a complete overview of the module's technical data.

PS-HSD 6/1 Configuration Template.....393
You can copy and/or print out the template and use it as a master to document your configuration settings.

PS-HSD 6/1 Data Sheet

Technical data

Parameter	Specification [1]
Identification	Top view 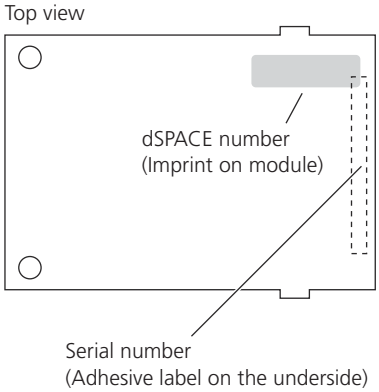 Imprint on module: DS1663
Channels	6 independent power stage channels with high-side driver outputs
Software	ConfigurationDesk 1.0 (on dSPACE Release 4.2) or later is required
Diagnostics	Open load or other malfunction, shutdown
Operating voltage [2]	6 … 36 V
Maximum switching frequency	Refer to the switching characteristic parameters [3]

Parameter		Specification [1]	
Switching characteristic	Channel Number	Channel 1 … 4	Channel 5 … 6
	Turn on	Delay time: 30 µs typ. (@ RL [4] = 6.5 Ω, UBAT = 13 V)	Delay time: 180 µs max. (to 90 % Vout @ RL = 47 Ω)
		Voltage slope: approx. 400 V/ms (10 % to 80 % @ RL = 6.5 Ω from Vout = 1.3 V … 10.4 V)	Slew rate: 2 V/µs max. (10 % to 30 % Vout @ RL = 47 Ω, UBAT = 13.5 V)
	Turn off	Delay time: 30 µs typ. (@ RL = 6.5 Ω, UBAT = 13 V)	Delay time: 200 µs max. (to 10 % Vout @ RL = 47 Ω)
		Voltage slope: approx. 400 V/ms (90 % to 10 % @ RL = 6.5 Ω from Vout = 11.7 V … 1.3 V)	Slew rate: 2 V/µs max. (70 % to 40 % Vout @ RL = 47 Ω, UBAT = 13.5 V)
Switching level CTRL input		Active high (non-inverted signal polarity)	
		Active low (inverted signal polarity)	
Current measurement device [5]	Voltage output range	0 … +5 V	
	Gain	1.25 A / V	
	Absolute measurement error [6]	Typ. ±1% gain, ±100 mA offset error @ UBAT = 12 V	
	Filter	▪ First-order low-pass filter ▪ –3 dB cutoff frequency (hardware-configurable)	
Output value[7]	Channel Number	Channel 1 … 4	Channel 5 … 6
	Current limitation	Max. 5 A	Max. 1 A
	Clamping voltage	UBAT – 48 V	UBAT – 63 V
	Clamping energy	For further information, refer to the data sheet of the VNQ830 from STMicroelectronics.	12 mJ
	Output resistance Ri[6]	≈ 65 mΩ [8]	≈ 200 mΩ [8]
Isolation		Level shifter: to eliminate ground potential differences between dSPACE RCP system (like MicroAutoBox) and the RapidPro Power Unit	
Protection		▪ Overload protection ▪ Overtemperature protection ▪ Short circuit protection to ground, UBAT [9] and across the load ▪ Active output clamping ▪ Integrated on carrier board: ▪ Load dump protection up to +100 V [10]	

Parameter	Specification [1]
	▪ Reverse voltage protection up to –100 V
Physical size (length x width)	▪ 60 x 42 mm (2.36 x 1.65 in.) ▪ Requires one slot

[1] Unless stated otherwise, the specifications are valid only if the dSPACE hardware is correctly powered, switched on, and ready for operation.
[2] The voltage for putting the module into operation is applied on the Power Unit's power supply inputs UBAT1 (rail 1) and UBAT2 (rail 2). For further information, refer to Calculating the Maximum Permissible Rail Supply Voltage on page 125.
[3] The maximum switching frequency depends mainly on the switching characteristic of the power stage. Different output characteristics for rising and falling edges will distort the duty cycle of the generated PWM signal. Therefore, it is strongly recommended to measure and verify the resulting duty cycle at the desired switching frequency to make sure that the duty cycle distortion can be accepted.
[4] RL = Load resistance
[5] Current measurement on two channels simultaneously.
[6] Typical value at T_Housing = +25 °C (+77 °F) unless otherwise stated.
[7] The output values stated are valid only without clamping diodes (freewheeling diodes) installed on the module.
[8] For the all-in resistance of the system you must add the modul's Ri to the Power Unit's output resistance.
[9] A short circuit to UBAT does not damage the module but can damage the connected load.
[10] Only valid for the internal voltage supply of PS-HSD 6/1 module.

PS-HSD 6/1 Configuration Template

Objective

You can use the following template as a master to document the settings of your module.

Identification and location

Enter the following parameters to identify and locate the module unambiguously.

Parameter		Specification	Label Location
Identification	dSPACE number	1663	Top view 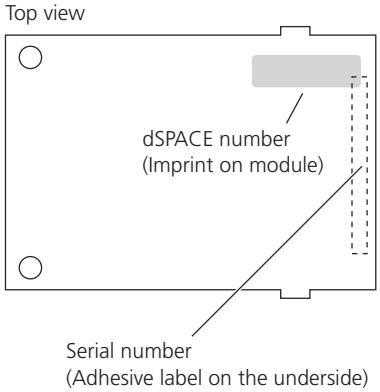
	Serial number		
	Module variant		
Place of installation	System name (unit/stack name)		
	Layer number(s) (unit position in a stack)		
	Slot number		

Parameter		Specification	Label Location
	(slot on the unit's carrier board)		

Software configuration

Enter the settings for each channel in the table below:

Parameter	CH1	CH2	CH3	CH4	CH5	CH6
Channel name						
Signal polarity						

User-configurable circuit

Enter the settings for each channel in the table below:

Parameter	CH1	CH2	CH3	CH4	CH5	CH6
Channel name						
External clamping diode [1)]						
Damping resistor [1)]						
Damping capacitor [1)]						
Low-pass filter frequency [1)] (for current measurement): ▪ $fg_{HS_U(I)_OUT}$ from the channel 1 filter ▪ $fg_{HS_U(I)_OUT}$ from the channel 2 filter			Not available.			

Parameter	CH1	CH2	CH3	CH4	CH5	CH6
Output circuit	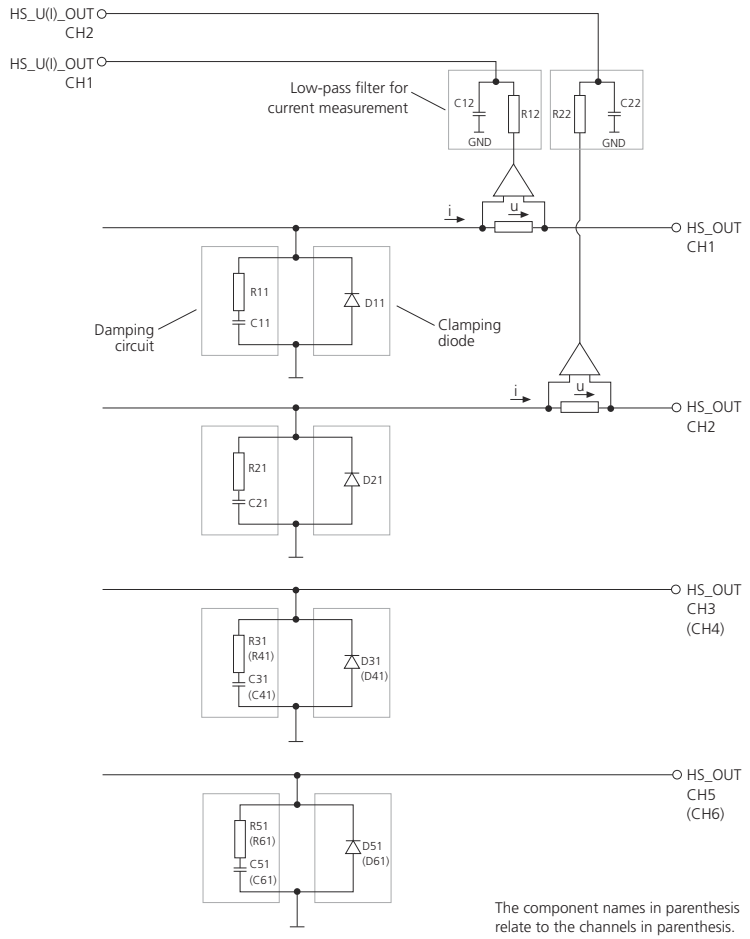					

Parameter	CH1	CH2	CH3	CH4	CH5	CH6
Solder pads	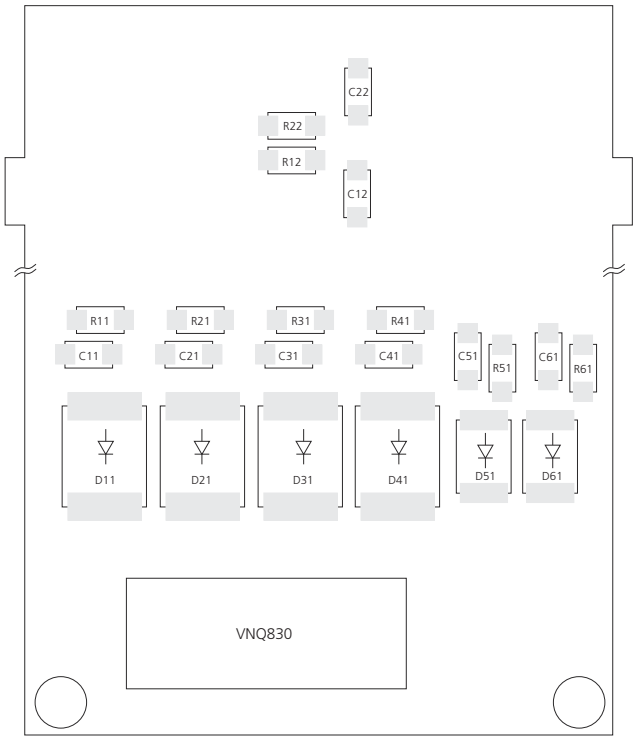					
Package type	Clamping diodes: ▪ SMC (D11 …D41) ▪ SMB (D51 and D61) Resistors and capacitors: ▪ 1206 SMD					

1) Parameter in ConfigurationDesk for RapidPro

PS-LSD 6/1 Module

Short description

The PS-LSD 6/1 (DS1662) is a low-side driver power stage module that provides six channels to drive loads which are connected to UBAT, such as valves, relays, ignition coils or heating elements.

Where to go from here

Information in this section

Module Overview.....398
Information on the module's features, components, and functionality will help you assess its possible uses.

Software Configuration.....401
The PS-LSD 6/1 module provides parameters which are software-configurable via ConfigurationDesk for RapidPro.

Hardware Configuration.....403
The PS-LSD 6/1 module provides user-configurable circuits to add electronic components (resistors, capacitors) to the output circuits of the module.

Connection to Peripheral Devices.....415
You have to note some points regarding the connection of loads and/or an emergency switch to the PS-LSD 6/1 module.

Module in Use.....419
You have access to information (i.e., temperatures on the circuit board) which the module provides during operation.

Data Sheet.....421
The data sheet summarizes the technical data of the PS-LSD 6/1 module; there is also a template that you can use as a master to document your configuration settings.

Module Overview

Where to go from here

Information in this section

Module Features.....398
Module Components and Functionality.....399

Module Features

Main features

The main features of the module are:

- 6 low-side driver outputs
- Output current:
  - 4 channels with max. 5 A each (hardware-configurable)
  - 2 channels with max. 1 A each
- Current measurement on two channels simultaneously with low-pass filter (hardware-configurable)
- Active output clamping (70 V/45 V) to prevent overvoltages when switching inductive loads

  Additional clamping diodes can be soldered onto the module in order to clamp the outputs against UBAT for each channel.
- Damping circuits (hardware-configurable) for each channel to avoid high frequency ringing when switching off the respective output
- Diagnostic functions
- Protection against short circuit, overtemperature, overvoltage
- Operating voltage: 6 … 37 V

Software

ConfigurationDesk 1.0 (on dSPACE Release 4.2) or later is required to work with the PS-LSD 6/1 module.

More features

For a complete list of the module's features, refer to PS-LSD 6/1 Data Sheet on page 421.

Module Components and Functionality

Objective

The module's components are shown on the basis of its simplified I/O circuit. More detailed descriptions of the components are given if their functions are not clear from the I/O circuit.

I/O circuit

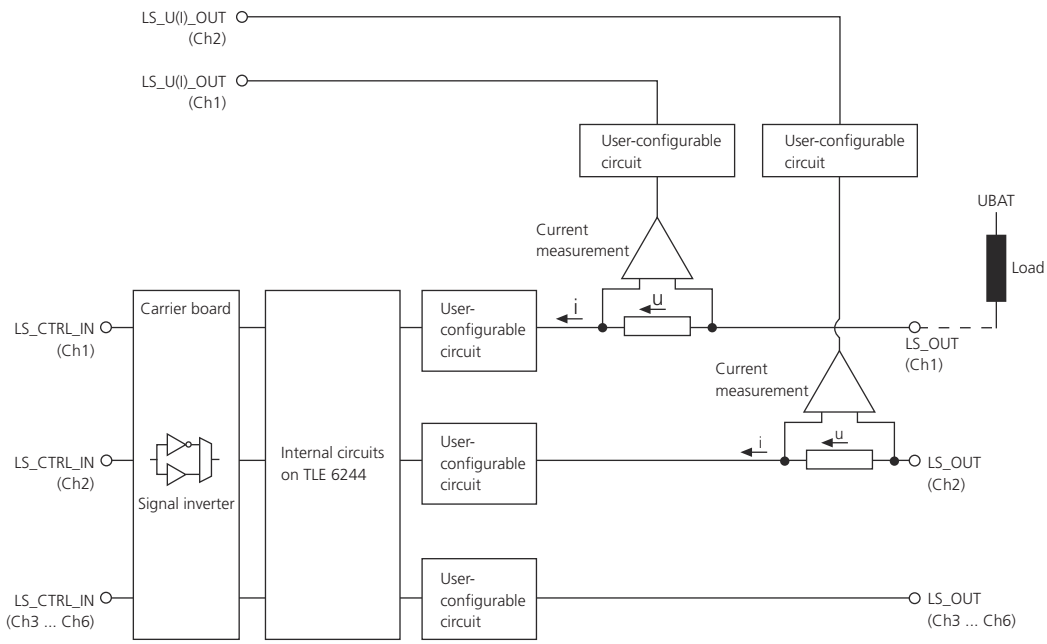

The PS-LSD 6/1 module is based on the TLE 6244 from Infineon.

User-configurable circuits

Additional components (resistors, capacitors, diodes, solder bridges) can be connected to adapt each channel to different loads and to configure the current measurement devices. For example, you can configure:

- The output current of channels 1 … 4
- The clamping voltage for each channel
- A damping circuit for each channel
- The cutoff frequency of the current measurement devices

For details, refer to Overview of User-Configurable Circuit on page 403.

Adjustable output values

The following table shows the possible values which can be adjusted via hardware configuration:

Channel	Output Current	Clamping Voltage [1)]
1 and 2	▪ Max. 2.2 A	70 V

Channel	Output Current	Clamping Voltage [1]
	▪ Max. 3.96 A ▪ Max. 5.28 A	
	▪ Max. 3.0 A ▪ Max. 5.28 A	45 V
3 and 4	▪ Max. 2.2 A ▪ Max. 3.96 A ▪ Max. 5.28 A	45 V
5 and 6	Max. 1.1 A (fixed)	45 V

[1] The clamping voltages stated are valid only without additional clamping diodes in the user-configurable circuits.

For information on configuring, refer to Configuring the Channel Output Value on page 408.

Current measurement

The current measurement can be used as an analog current feedback for closed-loop applications. The signals are available at the outputs LS_U(I)_OUT for channel 1 and channel 2.

The load current is measured via a shunt resistor. A load current flowing in the direction shown by the arrow in the illustration above results in a positive current measurement signal related to zero scale.

The two current measurement outputs have each a configurable passive first-order low-pass filter.

Signal inverter

The logical level of the inputs can be inverted by signal inverters, which are integrated on the unit's carrier board. You can configure this signal polarity via ConfigurationDesk for RapidPro. For details, refer to Configuration via ConfigurationDesk for RapidPro on page 401.

Restriction of the Power Unit's maximum operating voltage

The maximum possible operating voltage of the Power Unit is restricted to +37 V, if a PS-LSD 6/1 module is installed. The voltage for putting the module into operation is applied on the Power Unit's power supply inputs UBAT1 (rail 1) and UBAT2 (rail 2). If this voltage is higher than 37 V, the channels of the module which is supplied by the affected rail are deactivated.

Related topics

References

Overview of User-Configurable Circuit 403

Software Configuration

Configuration via ConfigurationDesk for RapidPro

Objective

Various parameters of the module are configurable via ConfigurationDesk for RapidPro. In addition, the software provides module-specific edit fields to document the values of the soldered components of the user-configurable circuit. This hardware information is stored on the module.

Software-configurable parameter

Parameter	Range/Setting	Factory Default Setting	Comment	Valid
Signal polarity	Non-inverted	Non-inverted	The polarity of the input signal is not inverted: A *low* input signal switches the connected load to GND.	Per channel
	Inverted		The polarity of the input signal is inverted: A *high* input signal switches the connected load to GND.	

Storage of the signal polarity settings

The signal polarity setting (CTRL) is stored on the hardware as follows:

- *Using ConfigurationDesk 1.1 and later:*

  The signal polarity setting is stored on the module. If you mount the PS-LSD 6/1 module in another unit, the setting you made previously is still set.
- *Using ConfigurationDesk 1.0:*

  The signal polarity setting is stored on the unit's carrier board. It do not change if you replace the PS-LSD 6/1 module by another PS-LSD 6/1 module.

Hardware information

You can enter information about the user-configurable circuit on the module-specific properties dialog. The information is stored on the module as reminder and does not affect the channel's behavior.

The following table shows the relation between the parameter names used in ConfigurationDesk for RapidPro and the names of the components used in the user-configurable circuit:

Parameter in ConfigurationDesk for RapidPro	Component in the Output Circuit	Description	Valid
External clamping diode	D11 … D61	You can edit if the module's circuit board is equipped with an additional clamping diode or not.	Per channel
Damping resistor	R11 … R61	You can edit the component values of the snubber network, used to suppress high frequency ringing which might occur when switching off the load.	
Damping capacitor	C11 … C61		
Low-pass filter frequency	C12/R12 (for Ch1)	You can edit the value of the –3 dB cutoff frequency of the current measurement filter (in Hz).	Only for channel 1 and channel 2
	C22/R22 (for Ch2)		

If the components were soldered by dSPACE according to your order, the specific values are already stored.

For a detailed circuit illustration, refer to Overview of User-Configurable Circuit on page 403.

Related topics

References

PS-LSD 6/1 Configuration Template 423

Hardware Configuration

Objective

Additional electronic components can be added to each channel to adapt it to the specifics of your application. The module provides solder pads where you can solder components like resistors, capacitors, or diodes in user-configurable circuits.

Where to go from here

Information in this section

Overview of User-Configurable Circuit.....403
Solder Pads and Component Requirements.....406
Configuring the Channel Output Value.....408
Using a Clamping Diode.....411
Configuring the Low-Pass Filter for Current Measurement.....412

Overview of User-Configurable Circuit

Objective

Each channel of the module provides user-configurable circuits. This is to adapt it to different loads.

Overview of the user-configurable circuit

The illustration below shows the user-configurable circuits in detail. All the components are shown and indicated.

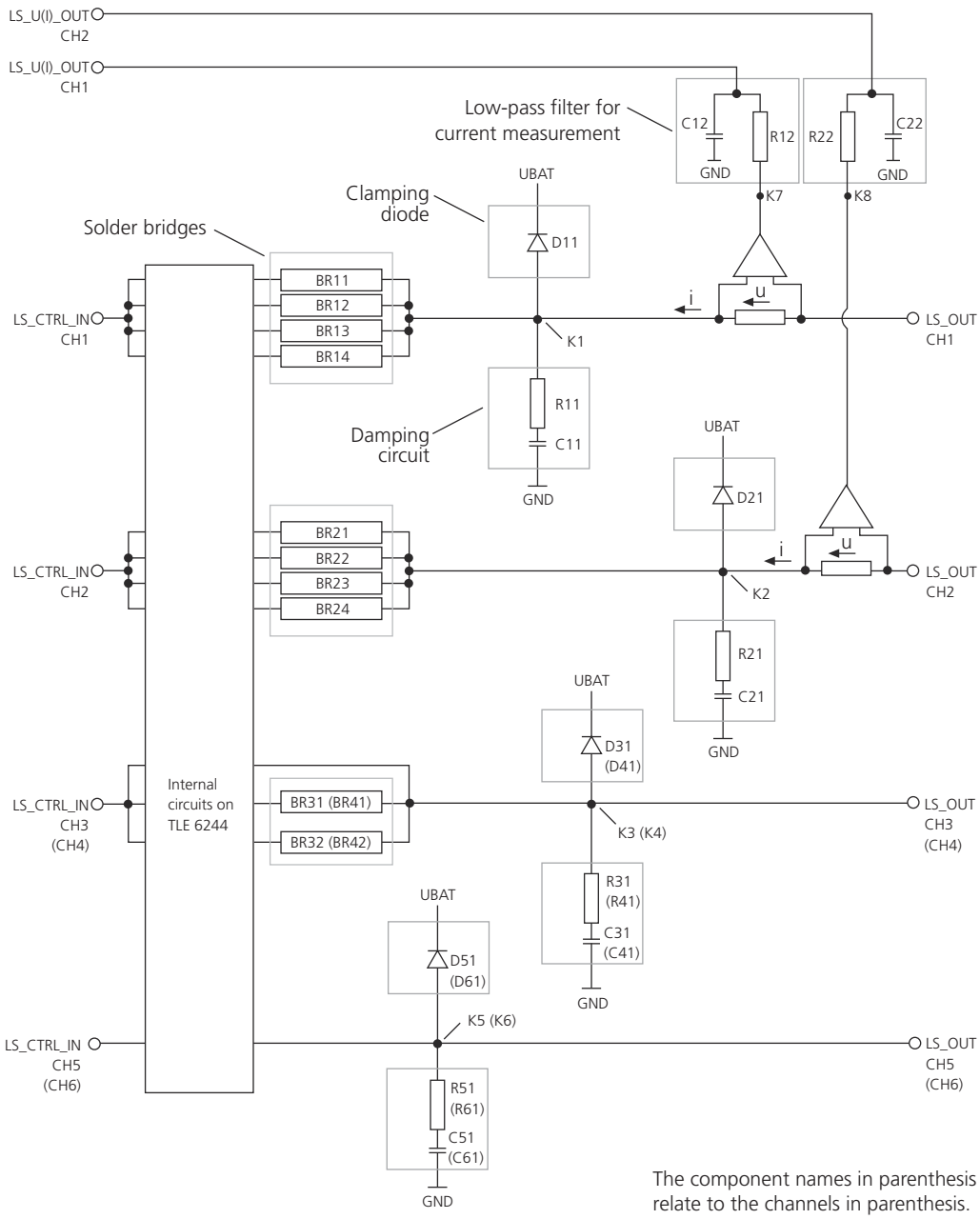

The component names in parenthesis relate to the channels in parenthesis.

Solder bridges

With the solder bridges, you can configure the output values of channels 1 … 4. For detailed information, refer to Configuring the Channel Output Value on page 408.

Clamping diode

You can solder additional clamping diodes onto the module to set the clamping voltage to UBAT. These diodes act as free-wheeling diodes. Without them, the clamping voltages of the TLE 6244 (70 V/45 V) are valid. For information on

possible type designations of clamping diodes, refer to Using a Clamping Diode on page 411.

Low-pass filter for current measurement

You can configure the cutoff frequency of the first-order low-pass filters for each current measurement channel by soldering resistors and capacitors. For examples of possible component values for specific cutoff frequencies, refer to Configuring the Low-Pass Filter for Current Measurement on page 412.

Damping circuit

You can configure a snubber circuit for each channel by soldering resistors and capacitors onto the module. This is to prevent high-frequency ringing when loads are switched off.

Factory default settings

The settings depend on your order as follows:

- If you did not specify components in your order, the user-configurable circuit of each channel is equipped with:
  - C12 = 4.7 nF, and R12 = 4.7 kΩ
  - C22 = 4.7 nF, and R22 = 4.7 kΩ

The solder bridges of channel 1 … 4 are closed to provide the values shown in the table below:

Channel	Output Current	Clamping Voltage [1]	On-Resistance
Channel 1	5.28 A	70 V	170 mΩ
Channel 2			
Channel 3		45 V	153 mΩ
Channel 4			

[1] The clamping voltages stated are valid if no clamping diode is soldered in.

- If you had specified components in your order, these were soldered by dSPACE.

Hardware information in ConfigurationDesk for RapidPro

ConfigurationDesk for RapidPro provides a module-specific properties dialog where you can edit the values of the soldered components as reminders for each channel on the module.

For the relevant parameters, refer to Hardware information on page 401.

Related topics

Basics

Changing the Hardware Configuration of SC/PS Modules (RapidPro System Hardware Installation Guide 🕮)
Changing the Installation of SC/PS/COM Modules (RapidPro System Hardware Installation Guide 🕮)

References

Configuration via ConfigurationDesk for RapidPro..... 401
Module Components and Functionality..... 399
PS-LSD 6/1 Configuration Template..... 423

Solder Pads and Component Requirements

Objective

The PS-LSD 6/1 module provides solder pads to add components on the module's circuit board.

Positions of solder pads

The following illustration shows the positions of the solder pads on the topside of the module. The signals available at the pads are also indicated:

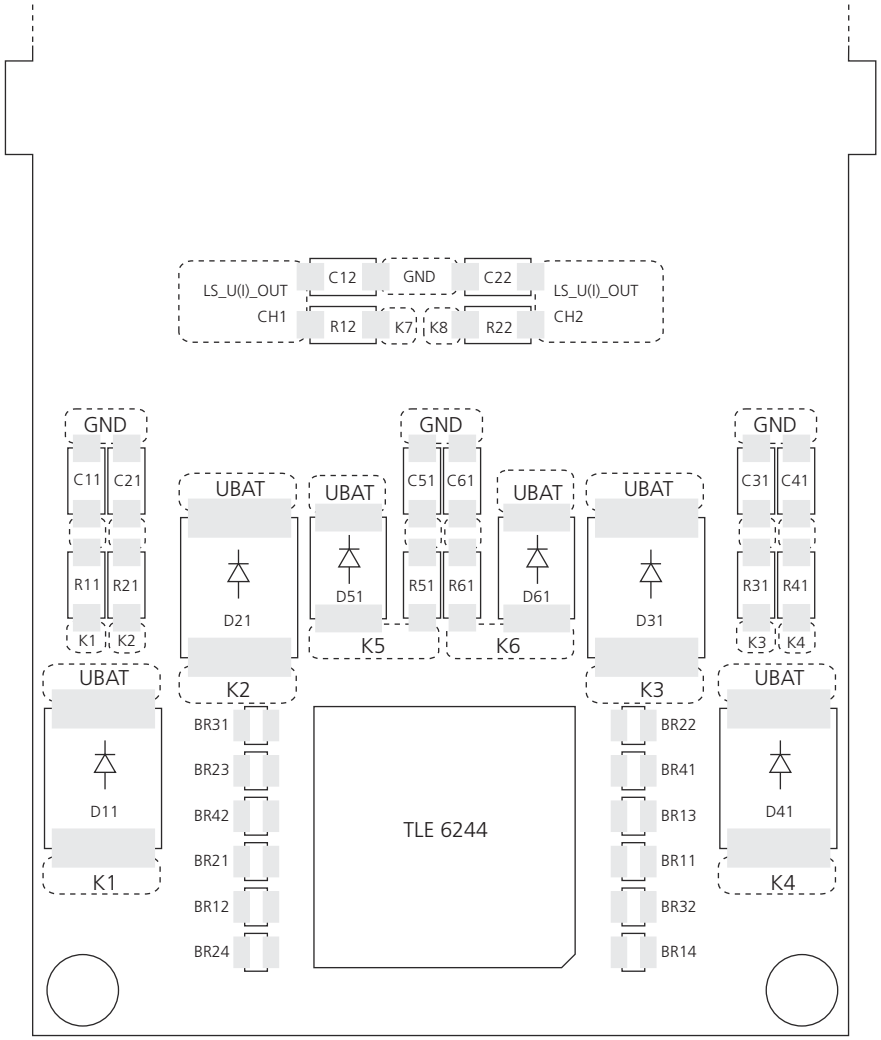

Component requirements

The following table gives information on the components that you can solder onto the module:

Component		Package Type	Other Requirements
D11 … D41	Diode	SMC	▪ The clamping diodes are polarized. The polarity stated in the illustration above must not be changed. ▪ You must ensure that only low-leakage diodes are used to avoid failure of the module's diagnostic functions especially at high temperatures.
D51, D61		SMB	

Component		Package Type	Other Requirements
R11 … R61	Resistor	1206	–
R12, R22			Must be in the range 2 kΩ … 200 kΩ.
C11 … C61	Capacitor	1206	–
C12, C22			Must be a ceramic type of NPO/COG or X7R.
BR1 … BR12	Solder bridge	–	–

Related topics

Basics

Changing the Hardware Configuration of SC/PS Modules (RapidPro System Hardware Installation Guide 🕮)
Changing the Installation of SC/PS/COM Modules (RapidPro System Hardware Installation Guide 🕮)

References

Configuration via ConfigurationDesk for RapidPro..... 401
PS-LSD 6/1 Configuration Template..... 423

Configuring the Channel Output Value

Objective

With solder bridges BR1 … BR12, you can configure the output values of channels 1 … 4 to adapt the output to different loads. The output values of channels 5 and 6 are fixed and cannot be changed.

Solder pads

The solder bridges are shorted by soldering the pads. You can connect various internal power stage outputs of the Infineon TLE 6244 in parallel in this way. For the location of the solder pads, refer to Solder Pads and Component Requirements on page 406.

Detecting the configuration

The solder bridge configuration is automatically detected by initializing the module during power-up. You can read the current channel output value of each channel via ConfigurationDesk for RapidPro.

Diagnostic current

Note

There is a continuous diagnostic current on each power stage output of the Infineon TLE 6244 of up to 980 µA, typical 580 µA (@ LS_OUT = 14 V).
If you connect these outputs in parallel to configure a specific channel of the PS-LSD 6/1 module, the diagnostic currents are added up. This causes a voltage drop on the load even in steady state. The voltage drop is proportional to the ohmic resistance of the load and to the diagnostic current. For more details, refer to the TLE6244 data sheet.

Configuring CH1

The table below shows the solder pads that must be shorted to get a specific output value for channel 1:

Output Current	Clamping Voltage[1]	On-Resistance[2]	Solder Bridges				Resulting Diagnostic Current	
			BR11	BR12	BR13	BR14	Typ.	Max.
0 A	–	(infinite)	– [3]	–	–	–	–	–
2.2 A	70 V	500 mΩ	✓ [3]	–	–	–	580 µA	980 µA
3.0 A	45 V	350 mΩ	–	–	–	✓	580 µA	980 µA
3.96 A	70 V	250 mΩ	✓	✓	–	–	1160 µA	1960 µA
5.28 A	45 V	206 mΩ	✓	–	–	✓	1160 µA	1960 µA
	70 V	170 mΩ	✓	✓	✓	–	1740 µA	2940 µA

[1] The clamping voltages stated are valid if the clamping diode is not soldered in.
[2] Typical value at T_Housing = +25 °C (+77 °F) unless otherwise stated.
[3] – = Solder bridge is open. ✓ = Solder bridge is closed.

Configuring CH2

The table below shows the solder pads that must be shorted to get a specific output value for channel 2:

Output Current	Clamping Voltage[1]	On-Resistance[2]	Solder Bridges				Resulting Diagnostic Current	
			BR21	BR22	BR23	BR24	Typ.	Max.
0 A	–	(infinite)	– [3]	–	–	–	–	–
2.2 A	70 V	500 mΩ	✓ [3]	–	–	–	580 µA	980 µA
3.0 A	45 V	350 mΩ	–	–	–	✓	580 µA	980 µA
3.96 A	70 V	250 mΩ	✓	✓	–	–	1160 µA	1960 µA
5.28 A	45 V	206 mΩ	✓	–	–	✓	1160 µA	1960 µA
	70 V	170 mΩ	✓	✓	✓	–	1740 µA	2940 µA

[1] The clamping voltages stated are valid if the clamping diode is not soldered in.
[2] Typical value at T_Housing = +25 °C (+77 °F) unless otherwise stated.
[3] – = Solder bridge is open. ✓ = Solder bridge is closed.

Configuring CH3

The table below shows the solder pads that must be shorted to get a specific output value for channel 3:

Output Current	Clamping Voltage[1]	On-Resistance[2]	Solder Bridges		Resulting Diagnostic Current	
			BR31	BR32	Typ.	Max.
2.2 A	45 V	450 mΩ	– [3]	–	580 µA	980 µA
3.96 A [4]	45 V	225 mΩ	✓ [3]	–	1160 µA	1960 µA
			–	✓	1160 µA	1960 µA
5.28 A	45 V	153 mΩ	✓	✓	1740 µA	2940 µA

[1] The clamping voltages stated are valid if the clamping diode is not soldered in.
[2] Typical value at T_Housing = +25 °C (+77 °F) unless otherwise stated.
[3] – = Solder bridge is open. ✓ = Solder bridge is closed.
[4] The output values are the same, no matter which solder bridge is closed.

Configuring CH4

The table below shows the solder pads that must be shorted to get a specific output value for channel 4:

Output Current	Clamping Voltage[1]	On-Resistance[2]	Solder Bridges		Resulting Diagnostic Current	
			BR41	BR42	Typ.	Max.
2.2 A	45 V	450 mΩ	– [3]	–	580 µA	980 µA
3.96 A [4]	45 V	225 mΩ	✓ [3]	–	1160 µA	1960 µA
			–	✓	1160 µA	1960 µA
5.28 A	45 V	153 mΩ	✓	✓	1740 µA	2940 µA

[1] The clamping voltages stated are valid if the clamping diode is not soldered in.
[2] Typical value at T_Housing = +25 °C (+77 °F) unless otherwise stated.
[3] – = Solder bridge is open. ✓ = Solder bridge is closed.
[4] The output values are the same, no matter which solder bridge is closed.

Values of CH5 and CH6

The table below shows the fixed values of channel 5 and channel 6:

Output Current	Clamping Voltage[1]	On-Resistance[2]	Resulting Diagnostic Current	
			Typ.	Max.
1.1 A	45 V	1000 mΩ	580 µA	980 µA

[1] The clamping voltage stated is valid if the clamping diode is not soldered in.
[2] Typical value at T_Housing = +25 °C (+77 °F) unless otherwise stated.

Related topics

Basics

Changing the Hardware Configuration of SC/PS Modules (RapidPro System Hardware Installation Guide 🕮)
Changing the Installation of SC/PS/COM Modules (RapidPro System Hardware Installation Guide 🕮)

References

Configuration via ConfigurationDesk for RapidPro..... 401

Using a Clamping Diode

Objective

To achieve clamping voltages other than those provided by the TLE 6244, you can solder external clamping diodes (freewheeling diodes) for each channel. You can set the clamping voltage to UBAT in this way.

I/O circuit of a single channel

The following illustration shows the simplified I/O circuit of a single channel:

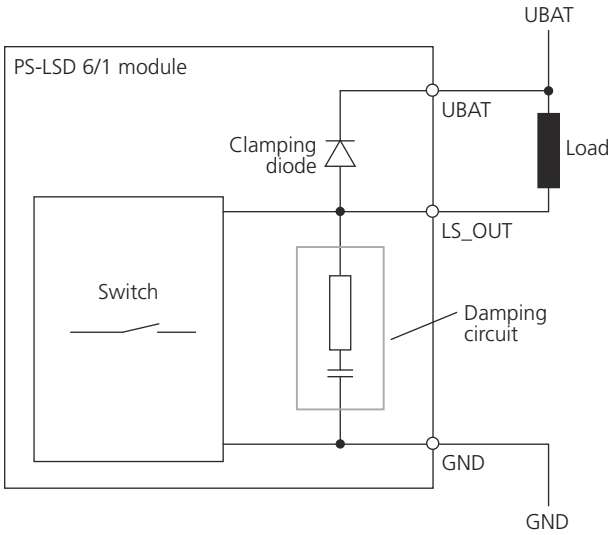

Examples of type designations

The following table lists possible types of clamping diodes:

Channel	Diode	Recommended Type	Comment
1 … 4	D11 … D41	MBRS3100	When choosing a comparable type, you must ensure that only low-leakage diodes are used to avoid failure of module diagnostic functions.
5	D51	MBRS1100	
6	D61		

Related topics

Basics

Changing the Hardware Configuration of SC/PS Modules (RapidPro System Hardware Installation Guide 🕮)
Changing the Installation of SC/PS/COM Modules (RapidPro System Hardware Installation Guide 🕮)

References

Configuration via ConfigurationDesk for RapidPro..... 401

Configuring the Low-Pass Filter for Current Measurement

Objective

You can equip each current measurement channel with a first-order low-pass filter. You can configure the –3 dB cutoff frequency for each filter by soldering resistors and capacitors.

Calculating the cutoff frequency

The cutoff frequency fg of the low-pass filters is easy to calculate with the formula below. Here it is shown for the LS_U(I)_OUT channel 1 circuit:

$$fg_{LS_U(I)_OUT\ Ch1} = \frac{1}{2 \times \pi \times R12 \times C12}$$

Assignment of the components

The illustration below shows the components and their assignment to the measurement channels:

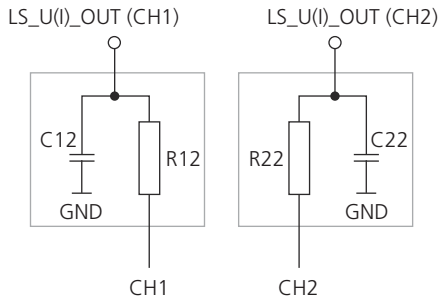

Example values

The following table shows standardized component values for different cutoff frequencies:

Cutoff Frequency fg	Resistor R	Capacitor C
10 Hz	160 kΩ	100 nF
20 Hz	82 kΩ	100 nF
50 Hz	68 kΩ	47 nF
100 Hz	16 kΩ	100 nF
200 Hz	24 kΩ	33 nF
500 Hz	6.8 kΩ	47 nF
1 kHz	16 kΩ	10 nF
1.5 kHz	16 kΩ	6.8 nF
2 kHz	24 kΩ	3.3 nF
3 kHz	16 kΩ	3.3 nF
4 kHz	12 kΩ	3.3 nF
5 kHz	6.8 kΩ	4.7 nF

Note

The resistor value must be in the range 2 kΩ … 200 kΩ.

Related topics

Basics

Changing the Hardware Configuration of SC/PS Modules (RapidPro System Hardware Installation Guide 🕮)
Changing the Installation of SC/PS/COM Modules (RapidPro System Hardware Installation Guide 🕮)

References

Configuration via ConfigurationDesk for RapidPro..... 401

Connection to Peripheral Devices

Where to go from here

Information in this section

Driving Loads.....415
Notes on Connecting an Emergency Switch.....416
Output Behavior Depending on the Signal Polarity Parameter.....417

Driving Loads

Objective

The load of a low-side driver channel must be connected at one side to UBAT. Additionally, you have to consider the load dump protection of the output channels.

Connection example

The load must be connected as shown in the illustration below.

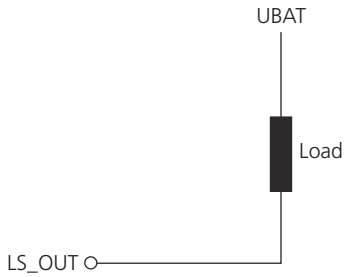

Load dump protection

Although the carrier board of the Power Unit is equipped with load dump protection, the power output channels are not protected in this way. They are however protected indirectly via the load resistances of the connected loads.

Determining the max. load dump voltage

To determine the maximum load dump voltage, you have to use the actual load resistance.

The following values are stated as example:

- For all channels with 45 V-clamping voltage together there is a power dissipation of 9.6 W for the typical duration of a load dump of 500 ms.
- The maximum clamping energy of each channel with 70 V-clamping voltage of the TLE 6244 is 50 mJ for a load resistance of 2 Ω and a load dump duration of 400 ms.

For detailed information, refer to the TLE 6244 data sheet from Infineon.

Notes on Connecting an Emergency Switch

Objective

If you connect an emergency switch to a RapidPro system that contains a PS-LSD 6/1 module *with installed clamping diode(s)*, the position of the switch in your circuit is important to avoid unexpected behavior.

Good configuration example

The illustration below shows the recommended way to connect an emergency switch.

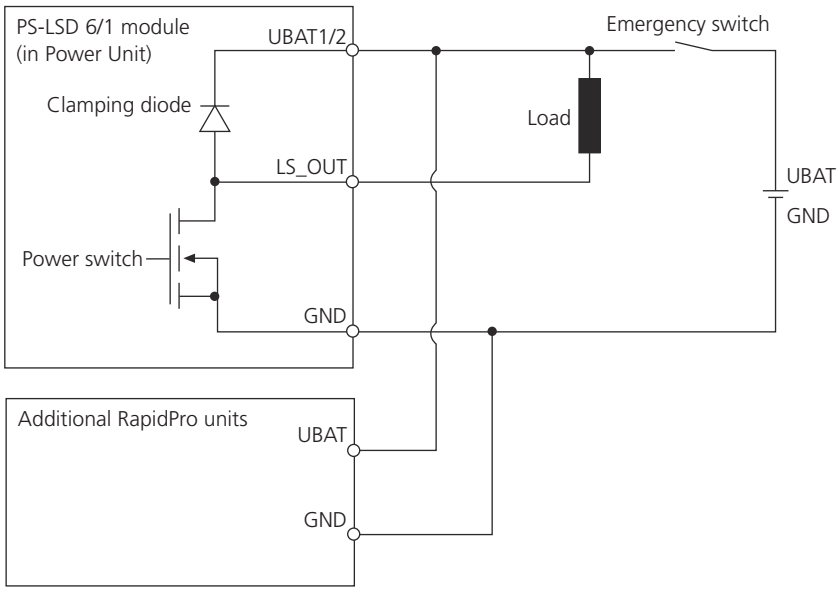

Bad configuration example

The following illustration shows the voltage flow behavior with an emergency switch which has an unfavorable position in an application.

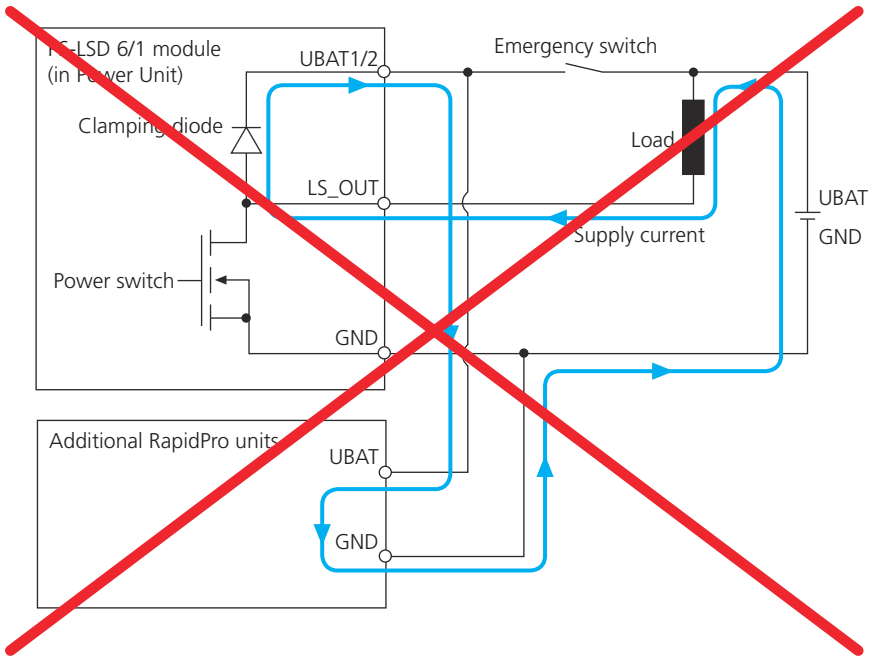

Output Behavior Depending on the Signal Polarity Parameter

Objective

Using the signal generation (PWM or bit I/O) with the above mentioned modules can cause unintended movements and/or material damage of connected devices in specific operating modes. You have to note the effects which the module's input signal can have on the connected load.

Current output on the load

In the following the interaction between input and output is shown, using a Control Unit (I/O subsystem with MPC565) with the RapidPro RTI Blockset.

The descriptions also apply to all other fields of application where RapidPro hardware and signal generation (PWM or bit I/O) are involved, such as a single RapidPro unit connected to MicroAutoBox using implementation software (RTLib, etc.).

The duty cycle setting you make in your Simulink® model with the RapidPro RTI Blockset and the signal polarity set with ConfigurationDesk for RapidPro take effect on the connected load.

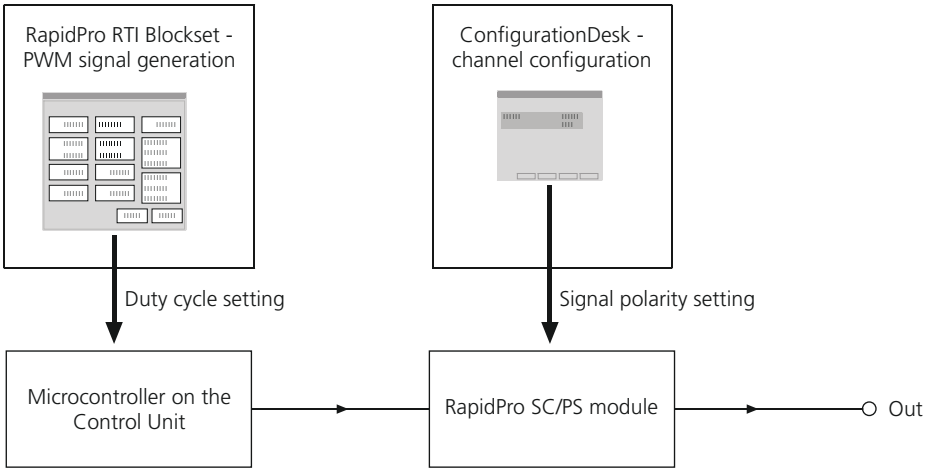

The following table shows the effect of the selected duty cycle to the connected load:

Duty Cycle	Signal Polarity	Output Current
"0"	Non-inverted	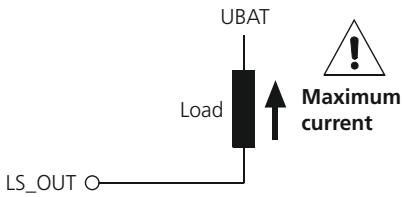
"1"	Inverted	
"1"	Non-inverted	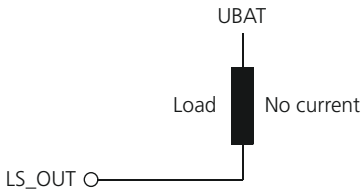
"0"	Inverted	

Module in Use

Objective

During operation you can access status information of the PS-LSD 6/1 module via ConfigurationDesk for RapidPro. The module provides:

- Permanent monitoring of the module's temperature
- Diagnostic messages about the status of the module and the status of the connection to external devices

Where to go from here

Information in this section

Monitoring.....419
Diagnostics.....419

Monitoring

Monitored parameters

The PS-LSD 6/1 provides monitoring of the following parameter:

Parameter	Description	Valid
Temperature	The temperature is measured on the module's circuit board. It serves for troubleshooting purposes.	For the module

Diagnostics

Diagnostic warnings and diagnostic errors

The diagnostic messages can be divided into warnings and errors.

- Diagnostic warnings occur if a fault, such as "Open load", is detected. Each warning is dropped as soon as the reason for it is removed.
- Diagnostic errors cause the module functions to be disabled (= shutdown). If a diagnostic error occurs, you have to remove the source of the error and reset the module's diagnostics via ConfigurationDesk for RapidPro.

Note

Depending on where a PS-LSD 6/1 module is inserted (slot 1 … 3 of rail 1, or slot 4 … 6 of rail 2), the corresponding front I/O connector of the Power Unit must be connected to the power supply. Otherwise you get unpredictable diagnostic messages.

Precondition to get diagnostic messages

ConfigurationDesk for RapidPro can receive diagnostic messages about channels sent by the RapidPro modules only if the RapidPro system is in execution mode. For further information, refer to Basics on the Display of Diagnostic Messages (ConfigurationDesk for RapidPro - Guide 🕮).

Possible diagnostic messages

Diagnostic Message		Description	Comment	Valid
Warning	Open load	No load is connected to the output. Note: The open load condition always occurs if the load current does not fall below the minimum value specified in the TLE 6244 data sheet. This can happen, for example: ▪ With large inductive loads and/or too large PWM frequencies and/or too small PWM duty cycles. ▪ With resistive loads with high resistance values. For further information, refer to the TLE 6244 data sheet from Infineon.	Detected only if the power switches turned off	Per channel
	Short to GND	The output is connected to GND.	Detected only if the power switches turned off	
Error	Short to supply	The output is connected to the positive terminal of the power supply. The affected channel is also set to shutdown mode.	Detected only if the power switches turned on	
	Overheat	The temperature on the power driver has reached a critical value. All the channels of the module are set to shutdown mode.	Detected only if the power switches are turned on	All channels
	Shutdown	This message indicates that the output drivers of the module have been disabled. This can happen, for example, if the ENABLE pin of the single unit is disabled.	–	Per channel

Data Sheet

Where to go from here

Information in this section

PS-LSD 6/1 Data Sheet 421
This gives you a complete overview of the module's technical data.

PS-LSD 6/1 Configuration Template 423
You can copy and/or print out the template and use it as a master to document your configuration settings.

PS-LSD 6/1 Data Sheet

Technical data

Parameter	**Specification** [1)]
Identification	Top view 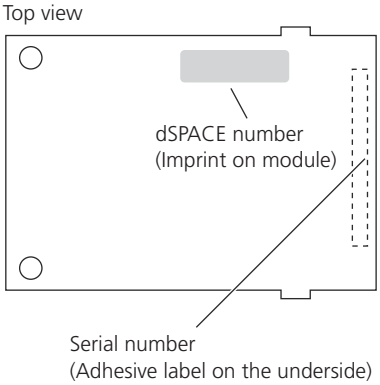 Imprint on module: DS1662
Channels	6 independent power stage channels with low-side driver outputs
Software	ConfigurationDesk 1.0 (on dSPACE Release 4.2) or later is required
Diagnostics	Open load, short to GND, short to supply, overheat, shutdown

Parameter		Specification [1]
Output value	Current limitation	2.2 A, 3 A, 3.96 A, 5.28 A (configurable on two channels)
		2.2 A, 3.96 A, 5.28 A (configurable on two channels)
		1.1 A (fixed on two channels)
	Clamping voltage	45 V, 70 V or UBAT (configurable)
	Clamping energy	Typ. 50 mJ
	Output resistance Ri [2]	▪ ≈ 114 mΩ … 1000 mΩ [3] ▪ Depends on the configuration
	Diagnostic current	Diagnostic current causes a voltage drop on the load even in steady state. For more information, refer to Configuring the Channel Output Value on page 408.
Operating voltage [4]		6 … 37 V
Maximum switching frequency		Refer to the switching time parameters [5]
Switching time	Low side "ON"	▪ Delay time: 10 µs ▪ Fall time: 5 µs
	Low side "OFF"	▪ Delay time: 10 µs ▪ Rise time: 10 µs
Switching level CTRL input		Active low (non-inverted signal polarity)
		Active high (inverted signal polarity)
Current measurement device [6]	Voltage output range	0 … +5 V
	Gain	1.25 A/V
	Absolute measurement error [7]	Typ. ±1% gain, ±100 mA offset error @ UBAT = 12 V
	Filter	▪ First-order low-pass filter ▪ –3 dB cutoff frequency (hardware-configurable)
Isolation		Level shifter: to eliminate ground potential differences between dSPACE RCP system (like MicroAutoBox) and the RapidPro Power Unit

Protection		▪ Overload protection
		▪ Overtemperature protection
		▪ Short-circuit protection to ground, GND [8]
		▪ Active output clamping
		▪ Integrated on carrier board:
		  ▪ Load dump protection up to +100 V [9]
		  ▪ Reverse voltage protection up to –100 V

Physical size (length x width)		▪ 60 x 42 mm (2.36 x 1.65 in.) ▪ Requires one slot

[1] Unless stated otherwise, the specifications are valid only if the dSPACE hardware is correctly powered, switched on, and ready for operation.

[2] Maximum resistance at Tj = +25 °C (+77 °F), for details refer to the TLE6244 data sheet.

Parameter	Specification [1)]

[3)] For the all-in resistance of the system you must add the modul's Ri to the Power Unit's output resistance.
[4)] The voltage for putting the module into operation is applied on the Power Unit's power supply inputs UBAT1 (rail 1) and UBAT2 (rail 2). For further information, refer to Calculating the Maximum Permissible Rail Supply Voltage on page 125.
[5)] The maximum switching frequency depends mainly on the switching characteristic of the power stage. Different output characteristics for rising and falling edges will distort the duty cycle of the generated PWM signal. Therefore, it is strongly recommended to measure and verify the resulting duty cycle at the desired switching frequency to make sure that the duty cycle distortion can be accepted.
[6)] Current measurement on two channels simultaneously.
[7)] Typical value at T_Housing = +25 °C (+77 °F) unless otherwise stated.
[8)] A short circuit to GND does not damage the module but can damage the connected load.
[9)] Only valid for the internal voltage supply of PS-LSD 6/1 module.

PS-LSD 6/1 Configuration Template

Objective

You can use the following template as a master to document the settings of your module.

Identification and location

Enter the following parameters to identify and locate the module unambiguously.

Parameter		Specification	Label Location
Identification	dSPACE number	1662	Top view 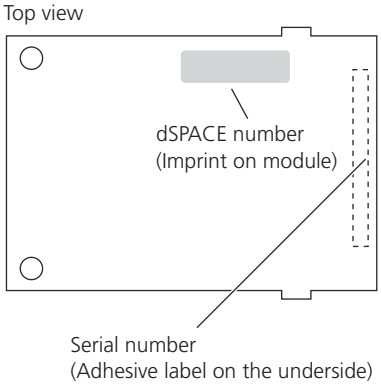
	Serial number		
	Module variant		
Place of installation	System name (unit/stack name)		
	Layer number(s) (unit position in a stack)		
	Slot number (slot on the unit's carrier board)		

Software configuration

Enter the settings for each channel in the table below:

Parameter	CH1	CH2	CH3	CH4	CH5	CH6
Channel name						
Signal polarity						

User-configurable circuit

Enter the settings for each channel in the table below:

Parameter	CH1	CH2	CH3	CH4	CH5	CH6
Channel name						
External clamping diode [1)]						
Damping resistor [1)]						
Damping capacitor [1)]						
Low-pass filter frequency [1)] (for current measurement): ▪ $fg_{LS_U(I)_OUT}$ from the channel 1 filter ▪ $fg_{LS_U(I)_OUT}$ from the channel 2 filter			Not available.			

Parameter	CH1	CH2	CH3	CH4	CH5	CH6
Output circuit	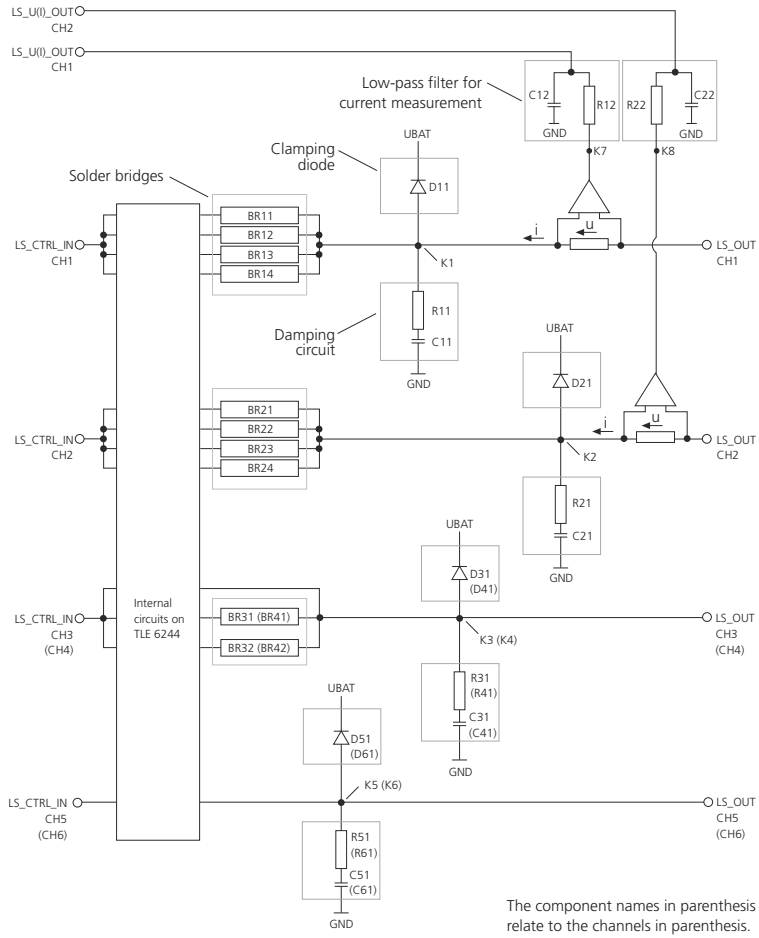					

Parameter	CH1	CH2	CH3	CH4	CH5	CH6
Solder pads	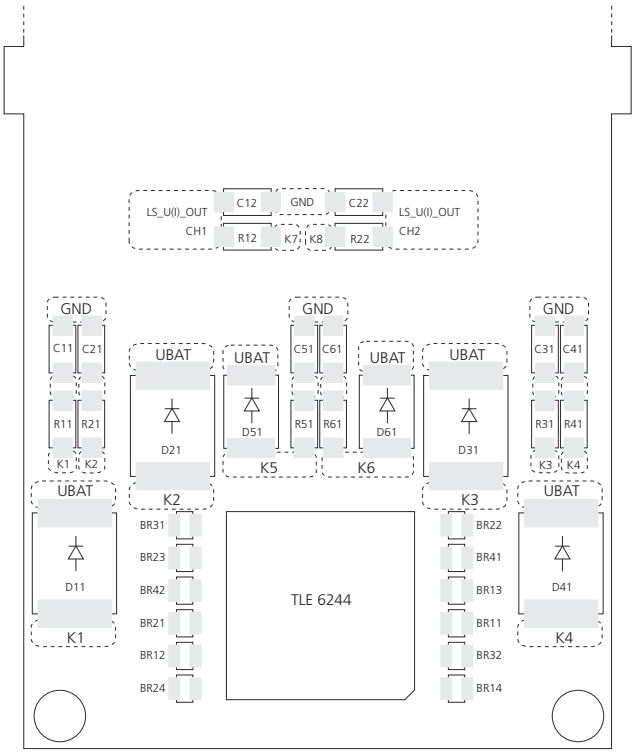					
Package type	Clamping diodes: ▪ SMC (D11 … D41) ▪ SMB (D51 and D61) Resistors and capacitors: ▪ 1206 SMD					

1) Parameter in ConfigurationDesk for RapidPro

PS-DINJ 2/1 Module

Short description

The PS-DINJ 2/1 module (DS1664) has two channels to drive electromagnetic injection valves.

Safety precautions

⚠ WARNING

Hazardous voltages! The PS-DINJ 2/1 module generates output voltages up to 100 V.
Risk of electric shock!

- Observe all safety precautions stated before using the PS-DINJ 2/1 module. Refer to Safety Precautions for Using the PS-DINJ 2/1 Module on page 27.

Where to go from here

Information in this section

Module Overview.....429
Information on the module's features, components, and functionality will help you assess its possible uses.

Software Configuration.....435
The PS-DINJ 2/1 module provides parameters which are software-configurable via ConfigurationDesk for RapidPro.

Connection to Peripheral Devices.....441
You have to note some points regarding the connection of the PS-DINJ 2/1 module to peripheral devices (for example, injection valves, or booster capacitors).

Module in Use.....450
You have access to information which the module provides during operation.

Data Sheet.....453
The data sheet summarizes the technical data of the PS-DINJ 2/1 module; there is also a template that you can use as a master to document your configuration settings.

Module Overview

Where to go from here

Information in this section

Module Features.....429
Module Components and Functionality.....430

Module Features

Main features

The main features of the PS-DINJ 2/1 module are:

- Two channels with a common booster
- Software-selectable booster mode:
  - Internal booster
  - Internal booster with external capacitor
  - External booster
- Adjustable peak current(s) (minimum 2 A, maximum 30 A)
- Adjustable hold current (minimum 2 A, maximum 30 A)
- Software-selectable input signal mode that causes different output signal behavior:
  - Single control signal mode -> peak and hold phases
  - Double control signal mode -> peak A, peak B, and hold phases
- Adjustable timeout for peak and hold phase
- TTL voltage level for control signals
- Diagnostic functions

Software

ConfigurationDesk 1.1.2 (on dSPACE Release 5.2) or later is required for working with the PS-DINJ 2/1 module.

The following features are supported as of ConfigurationDesk 1.2.1 (on dSPACE Release 5.4) with plug-in software:

- Software-selectable booster mode
- Software-selectable operation mode (single control input mode, double control input mode)

More features

For a complete list of the module's features, refer to PS-DINJ 2/1 Data Sheet on page 453.

Module Components and Functionality

Objective

A schematic of the I/O circuit is used to show the module's components. More detailed descriptions of the components are given if their functions are not clear from the I/O circuit.

I/O circuit

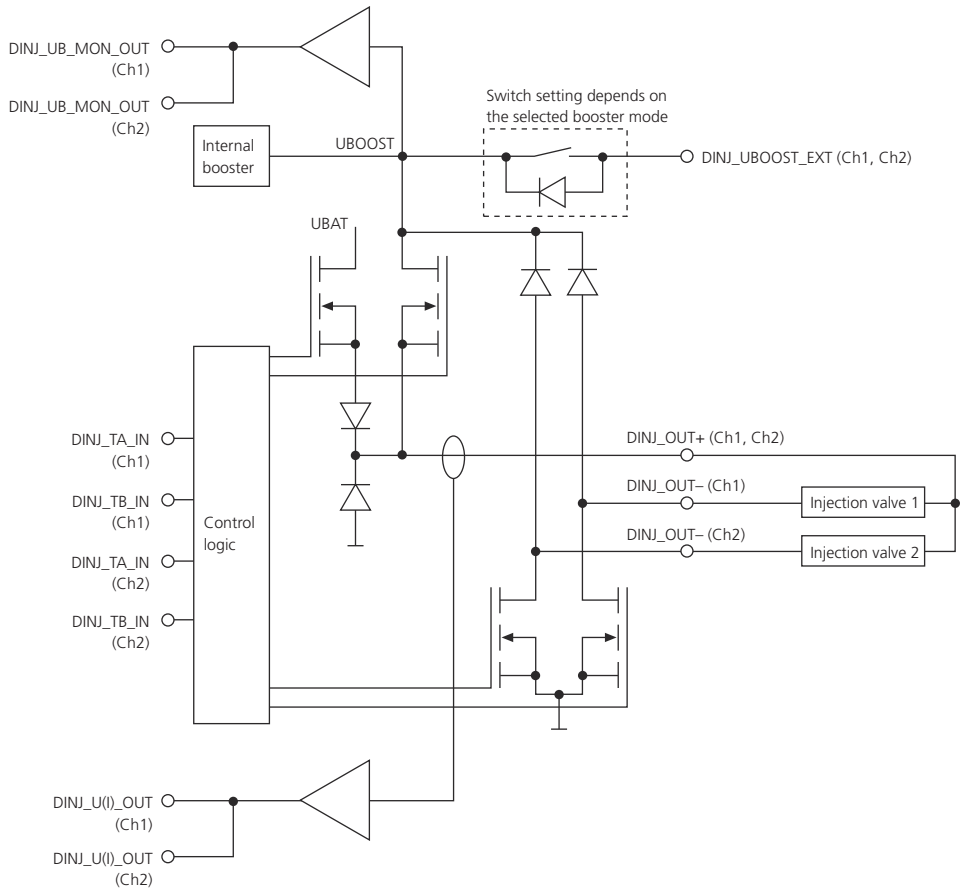

Note

The module is designed so that only one channel can output a signal at a time.

Control signals and modes

You drive the load current on a connected injection valve via the input signal(s). The selected control mode determines if you need one or both input signals to drive the output signal.

Single control signal mode In this mode the length of the input signal on the DINJ_TA_IN pin sets the overall length of the injection signal (peak and hold phase). You define the duration of the peak phase via ConfigurationDesk for RapidPro (see Configuration via ConfigurationDesk for RapidPro on page 435). The input DINJ_TB_IN does not affect the load signal.

The illustration below shows an example how the input control signal DINJ_TA_IN relates to the output signal on a connected injection valve.

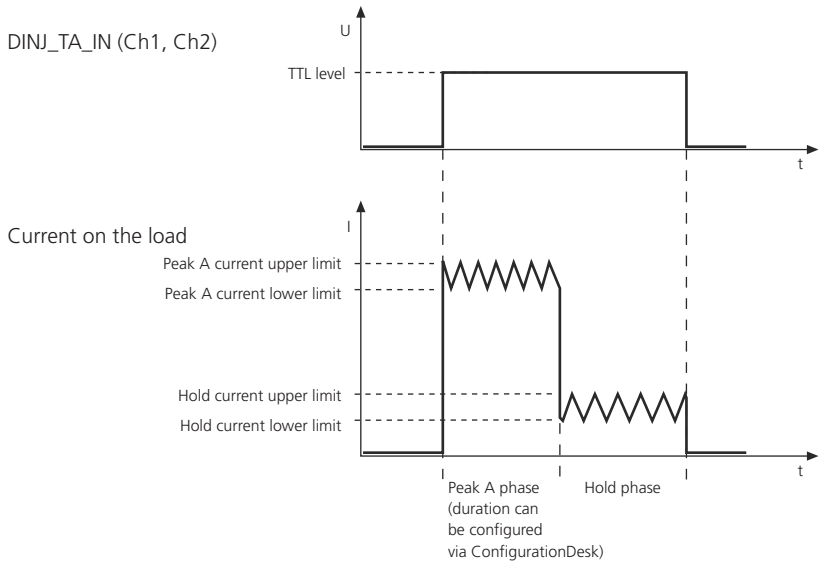

Note

Avoiding negative effects on the output signal's timing accuracy

If you use only one channel of the PS-DINJ 2/1 module you have to note points to avoid negative effects on the output signal's timing accuracy. For further information, refer to Avoiding negative effects on the output signal's timing accuracy on page 442.

Note

The load currents of the peak and hold phases are two-step controlled and vary between the respective adjustable lower and upper values.

Double control signal mode In this mode you drive the connected load via two different configurable peak currents and a hold current. You need both input signals of a channel (DINJ_TA_IN and DINJ_TB_IN) for this.

The illustration below shows an example how the input control signals DINJ_TA_IN and DINJ_TB_IN relate to the output signal on a connected injection valve.

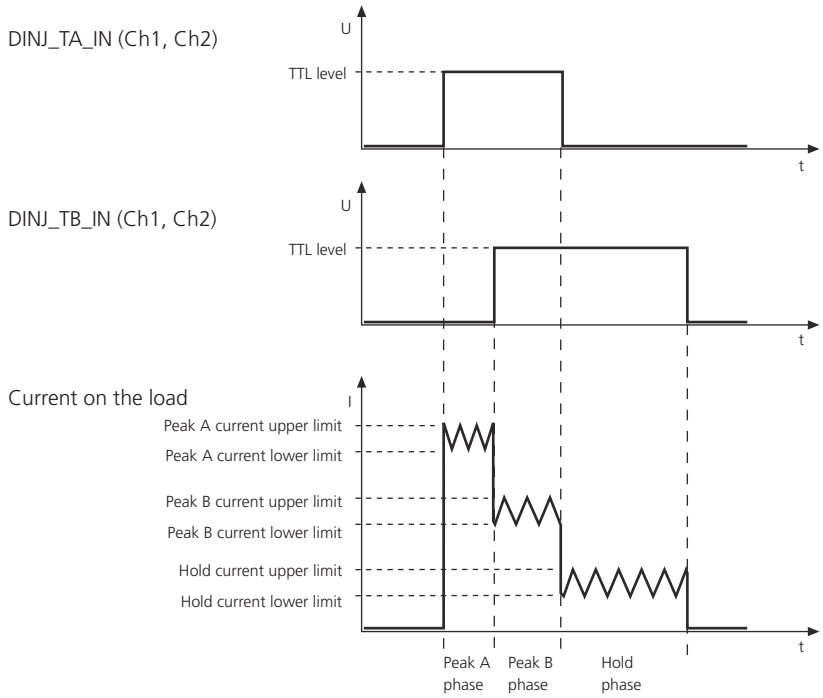

Note

Setting in the RPCU_INJ_IGN_TPU_BLx block

If you use the RPCU_INJ_IGN_TPU_BLx block of the RTI RapidPro Control Unit Blockset you must clear the Enable gate mode checkbox to get the full functionality. For further information, refer to Injection Page (RPCU_INJ_IGN_TPU_BLx) (RapidPro System – I/O Subsystem MPC565 RTI Reference 🕮).

Note

Avoiding negative effects on the output signal's timing accuracy

If you use only one channel of the PS-DINJ 2/1 module you have to note points to avoid negative effects on the output signal's timing accuracy. For further information, refer to Avoiding negative effects on the output signal's timing accuracy on page 442.

Note

The load currents of the peak and hold phases are two-step controlled and vary between the respective adjustable lower and upper values.

Booster

The PS-DINJ 2/1 module provides an internal booster to generate the current for the peak phase(s). You can select the booster mode appropriate to your application via ConfigurationDesk for RapidPro.

Internal booster The PS-DINJ 2/1 module provides one internal booster for both channels, which you can set via ConfigurationDesk for RapidPro, refer to Software Configuration on page 435.

Internal booster with external capacitor The internal booster provides the maximum possible electrical energy that is allowed by the module's design. When driving large inductive loads, you can connect an external booster capacitor to the DINJ_BOOST_EXT pins to increase the electrical energy.

⚠ WARNING

Hazardous voltages!

The boost voltage generated by the internal booster of the PS-DINJ 2/1 is connected to the DINJ_UBOOST_EXT pins on the front connector of the Power Unit, if the Booster mode is set via ConfigurationDesk for RapidPro to Internal booster with external capacitor.

Risk of electric shock!

- Do not touch the pins of the Power Unit's front I/O connectors.

For connecting notes and tips, refer to Notes on Connecting an External Booster Capacitor on page 442.

External booster If the performance of the module-internal booster is not sufficient for your field of application, you can connect an external boost voltage source to the DINJ_UBOOST_EXT pins. For connecting notes and tips, refer to Notes on Connecting an External Booster on page 445.

Boost voltage measurement

Boost voltage measurement signals are available at the output pins DINJ_UB_MON_OUT (CH1, CH2) to measure the boost voltage.

Note

Both channels share a single boost voltage measurement circuit. To assess the result of the measurement, you need to know which channel is driven and you must consider the two different use scenarios.

- *Installed in a stack with UCB – intelligent I/O subsystem use scenario*
  If the module is installed in a Power Unit which is part of a stack with UCB, you must measure the DINJ_UB_MON_OUT signal with an RPCU_ADC block. The RPCU_ADC block maps the voltage of the DINJ_UB_MON_OUT signal (0 ... 5V) to the range 0 ... 1. The ADC output value is calculated as follows: ADC_OUT(DINJ_UB_MON_OUT) = 1/(5 V) x 0.04 x U_{boost}.
- *Installed in a single Power Unit – signal conditioning and power stage use scenario*
  You can directly measure the voltage on its rear I/O connector if the module is installed in a single Power Unit. You can determine the voltage of the DINJ_UB_MON_OUT signal in this use scenario with the following formula: DINJ_UB_MON_OUT [V] = 0.04 x U_{boost}.

Current measurement

Current measurement signals are available at the output pins DINJ_U(I)_OUT (CH1, CH2) to measure the load current of the output signal.

Note

Both channels share a single current measurement circuit. To assess the result of the measurement, you need to know which channel is driven and you must consider the two different use scenarios.

- *Installed in a stack with UCB – intelligent I/O subsystem use scenario*
  If the module is installed in a Power Unit which is part of a stack with UCB, you must measure the DINJ_U(I)_OUT signal with an RPCU_ADC block. The RPCU_ADC block maps the voltage range of the DINJ_U(I)_OUT signal (0 ... 5V) to the range 0 ... 1. The ADC output value is calculated as follows: ADC_OUT(DINJ_U(I)_OUT) = 1/(5 V) x 0.136 V/A x I_L.
- *Installed in a single Power Unit – signal conditioning and power stage use scenario*
  You can directly measure the voltage of the DINJ_UB_MON_OUT signal on its rear I/O connector if the module is installed in a single Power Unit. You can determine the voltage in this use scenario with the following formula: DINJ_U(I)_OUT [V] = 0.136 V/A x I_L.

Software Configuration

Configuration via ConfigurationDesk for RapidPro

Objective

Various parameters of the module are configurable via ConfigurationDesk for RapidPro.

Software-configurable parameters

Parameter	Range/ Setting	Factory Default Setting	Description	Valid
Peak A current upper limit (2 A … 30 A)	2 A … 30 A	20 A	To specify the upper current threshold of the two-step controlled direct injection peak A output signal.	Per channel
Peak A current lower limit (2 A … 30 A)	2 A … 30 A	18 A	To specify the lower current threshold of the two-step controlled direct injection peak A output signal.	
Peak A duration (0.00000 … 16.00000 ms) [1]	0.00000 … 16.00000 ms	0.1 ms	To specify the duration of the peak A current. The parameter is stored with a resolution of 250 ns.	
Peak B current upper limit (2 A … 30 A) [2]	2 A … 30 A	16 A	To specify the upper current threshold of the two-step controlled direct injection peak B output signal.	
Peak B current lower limit (2 A … 30 A) [2]	2 A … 30 A	14 A	To specify the lower current threshold of the two-step controlled direct injection peak B output signal.	
Hold current upper limit (2 A … 30 A)	2 A … 30 A	10 A	To specify the upper current threshold of the two-step controlled direct injection hold output signal.	
Hold current lower limit (2 A … 30 A)	2 A … 30 A	8 A	To specify the lower current threshold of the two-step controlled direct injection hold output signal.	
Operation mode	▪ Double control signal mode ▪ Single control signal mode	Double control signal mode	▪ Double control signal mode: The load is controlled by the peak A current, peak B current and the hold current. For this, you need both input	All channels

Parameter	Range/ Setting	Factory Default Setting	Description	Valid
			signals (DINJ_TA_IN and DINJ_TB_IN) of a channel. **Note** If you use the RPCU_INJ_IGN_TPU_BLx blockset of the RTI RapidPro Control Unit Blockset you must clear the **Enable gate mode** checkbox to get the full functionality. For further information, refer to Injection Page (RPCU_INJ_IGN_TPU_BLx) (RapidPro System – I/O Subsystem MPC565 RTI Reference 🕮). ▪ Single control signal mode: The load is controlled by the peak A current and the hold current. The signal on the load is determined by the length of the input signal (DINJ_TA_IN pin) and the *Peak A duration* value. The input DINJ_TB_IN does not affect the load signal. For illustrations which show examples how the input control signals (DINJ_TA_IN and DINJ_TB_IN) relate to the output signal on a connected injection valve, refer to Control signals and modes on page 430.	

Parameter	Range/ Setting	Factory Default Setting	Description	Valid
Boost voltage (UBAT … 100 V)	UBAT … +100 V	90 V	To specify the voltage of the module's internal booster. **Note** ▪ The lowest boost voltage is never below UBAT –1 V, even if you set a lower value. ▪ If you connect an external booster, you have to set the maximum boost voltage parameter to the lowest value (UBAT). This is to avoid damage to the module and the external booster.	All channels
Timeout peak (0 s … 6.55 s) [2]	0 s … 6.55 s [3]	0.2 s	Lets you specify a timer value for timeout supervision of the complete peak phases: peak A and peak B. The timer starts with the beginning of the peak A phase. If the peak phase (peak A plus peak B) is still active when the timer expires, a diagnostic message is generated and	All channels

Parameter	Range/ Setting	Factory Default Setting	Description	Valid
			the module is set to shutdown mode (refer to Diagnostics on page 450). **Note** Only the modules as of revision number 5.0 support the full value range. The modules up to revision number 4.x support a value range of 0 s ... 0.4 s. When you download the configuration settings and the module does not support the entered value, the value is saturated to 0.4 s. The saturated value is displayed after you uploaded the module configuration. The revision number is printed on the circuit board (underside) and displayed in ConfigurationDesk for RapidPro (**Module hardware version** property). Refer to Module Properties (ConfigurationDesk for RapidPro User Interface Reference 🕮).	
Timeout hold (0 s … 6.55 s)	0 s … 6.55 s [3)]	0.2 s	Lets you specify a timer value for timeout supervision of the hold phase. The timer starts with the beginning of the hold phase. If the hold phase is still active when the timer expires, a diagnostic message is generated and the module is set to	All channels

Parameter	Range/ Setting	Factory Default Setting	Description	Valid
			shutdown mode (refer to Diagnostics on page 450). **Note** Only the modules as of revision number 5.0 support the full value range. The modules up to revision number 4.x support a value range of 0 s ... 0.4 s. When you download the configuration settings and the module does not support the entered value, the value is saturated to 0.4 s. The saturated value is displayed after you uploaded the module configuration. The revision number is printed on the circuit board (underside) and displayed in ConfigurationDesk for RapidPro (**Module hardware version** property). Refer to Module Properties (ConfigurationDesk for RapidPro User Interface Reference 🕮).	
Booster mode	▪ Internal booster ▪ Internal booster with external capacitor ▪ External booster	Internal booster	Set the booster mode according to the way you use the module. ▪ Internal booster: The boost voltage is generated by the internal booster. The DINJ_UBOOST_EXT pins are internally disconnected. They do not carry any voltage. ▪ Internal booster with external capacitor: The boost voltage is generated by the internal booster. The DINJ_UBOOST_EXT pins are internally connected to feed an external booster capacitor. ▪ External booster: The boost voltage is generated by an externally connected voltage supply. The DINJ_UBOOST_EXT pins are	All channels

Parameter	Range/ Setting	Factory Default Setting	Description	Valid
			internally connected and the internal booster is switched off. **Note** Regardless of whether the Booster mode is set, an external boost voltage is fed to the module's internal booster if the voltage is higher than the specified internal boost voltage.	

[1] Enabled in Single control signal mode.
[2] Disabled in Single control signal mode.
[3] Up to ConfigurationDesk 5.6 (dSPACE Release 2016-B): 0 s ... 0.4 s

Peak/hold current settings

Note

The generated ripple can slightly differ from your settings. The difference mainly depends on the slew rate of the load current that is caused, for example, by the load's inductance, the boost voltage, and the supply voltage (UBAT).

Connection to Peripheral Devices

Where to go from here

Information in this section

Notes on Connecting Injection Valves.....441
Notes on Connecting an External Booster Capacitor.....442
Notes on Connecting an External Booster.....445
Driving High Inductive Loads (Approx. > 1 mH).....446

Notes on Connecting Injection Valves

Objective

The PS-DINJ 2/1 module provides several I/O signals which are internally connected to pins on the front connector of the Power Unit. You must note the following points when connecting injection valves.

Connecting output pins to injection valves

The module's outputs are available for each specific channel at several pins on the Power Unit's front connectors:

- DINJ_OUT- on three pins per channel
- DINJ_OUT+ on four pins shared by both channels

⚠ WARNING

Hazardous voltages! The PS-DINJ 2/1 module (DS1664) generates output voltages up to 100 V.

Risk of electric shock!

- Do not touch the connector pins of the RapidPro Power Unit or any connected terminals and devices while the system is powered.
- Do not power the RapidPro system, if the cover of the housing has been removed.
- After the RapidPro system is powered down, wait at least 3 minutes for the internal voltage to dissipate, before connecting/disconnecting devices or doing any installation work.

Note

- Connect all the output pins to the load to avoid damage to the Power Unit.
- Star point connection is recommended for connecting the pins to the load. The star point must be located as close as possible to the outside of the matching Sub-D connector that is connected to the Power Unit.

The PS-DINJ 2/1 module can generate very high and very short voltage spikes by driving injection valves. To avoid electromagnetic interferences to other devices in your test bench, you have to pay attention to specific guidelines when you build the cable harness. For further information, refer to Note for Building a Cable Harness to Connect Devices to a PS-DINJ 2/1 Module (RapidPro System Hardware Installation Guide 🕮).

Avoiding negative effects on the output signal's timing accuracy

You have to note points to avoid negative effects on the output signal's timing accuracy if you connect only one channel to a load and leave the outputs of the other channel unconnected.

PS-DINJ 2/1 module used in a RapidPro system used as intelligent I/O subsystem (stack with UCB)

- You have to remove all Simulink® blocks from the model which are connected to the unused channel.

– or –

- You have to configure all Simulink® blocks of the channel where no load is connected, to prevent any injection pulse generation.

PS-DINJ 2/1 module used in a single Power Unit If you do not connect a load to a channel set the appropriate input pin(s) to low level.

- Single control input mode: DINJ_TA_IN to low level
- Double control input mode: DINJ_TA_IN and DINJ_TB_IN to low level

Notes on Connecting an External Booster Capacitor

Objective

The internal booster provides the maximum possible electrical energy that is allowed by the module's design. When driving large inductive loads, you can connect an external booster capacitor to increase the electrical energy. This is to reduce the voltage drop during the rise phase of the load current.

Safety precautions

⚠ WARNING

Hazardous voltages!

The boost voltage generated by the internal booster of the PS-DINJ 2/1 is connected to the DINJ_UBOOST_EXT pins on the front connector of the Power Unit, if the Booster mode is set via ConfigurationDesk for RapidPro to Internal booster with external capacitor.

Risk of electric shock

- Do not touch the pins of the Power Unit's front I/O connectors.

Note

Do not connect an external booster capacitor in applications with small load inductances and boost voltages near 100 V. In such a case, an excessive booster voltage overshoot can occur at the end of the injection pulse. The overshoot triggers the shutdown of the module.
To avoid this behavior, reduce the boost voltage via ConfigurationDesk for RapidPro, or remove the external booster capacitor.

Booster mode in ConfigurationDesk for RapidPro

You must set the Booster mode in ConfigurationDesk for RapidPro to Internal booster with external capacitor if you connect an external booster capacitor to the module. The module's internal switch connects the internal booster to the DINJ_UBOOST_EXT pins to feed the external capacitor.

Note

In the Internal booster with external capacitor mode, both capacitors (internal + external) are used in parallel. The effective capacitance is the sum of both components.

Choosing a booster capacitor

Tip

The following capacitor types are recommended to use:

- EPCOS B43504B2477M, 470 µF, 250 V
- PANASONIC ECOS2EP471CA, 470 µF, 250 V

- The connected capacitor must provide a low effective series resistance and a large ripple current capability.
- Do not use capacitors larger than 470 µF. The higher charge currents of a capacitor larger than 470 µF can cause the shutdown of the module.
- You can use capacitors with less than 470 µF if you use lower current values for the Peak current upper limit settings.

I/O circuit with external booster capacitor

The illustration below shows the module's simplified I/O circuit with a connected external booster capacitor.

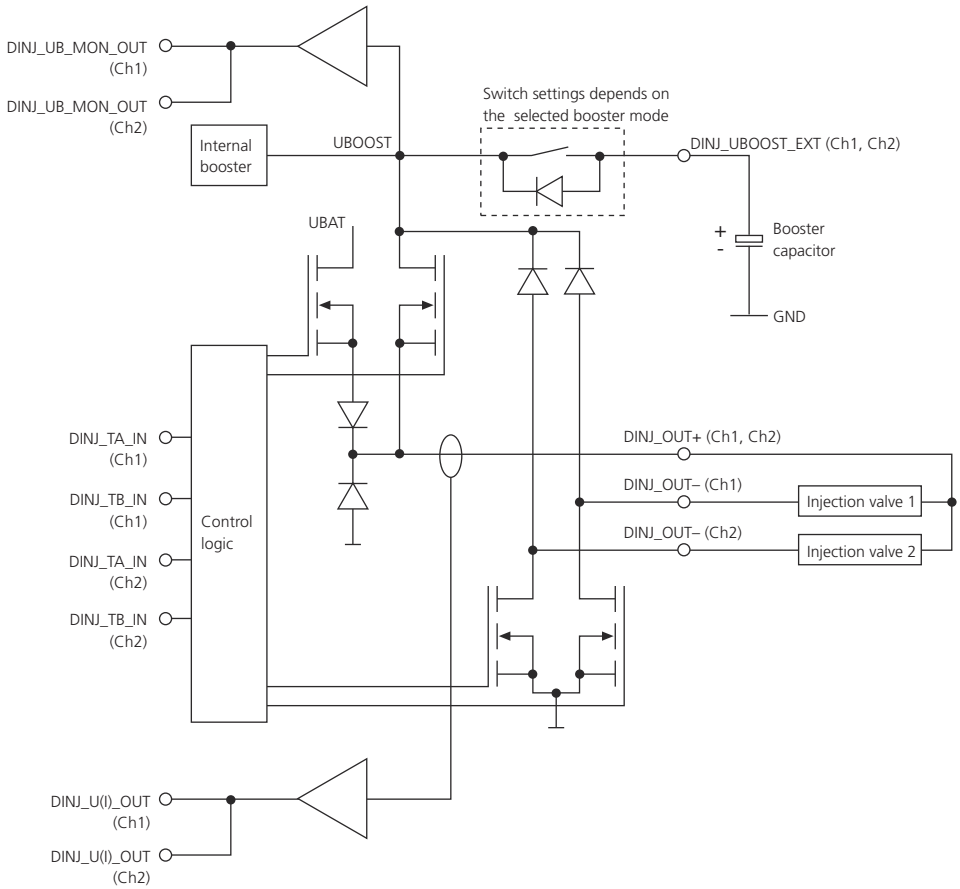

Mapping to I/O pins

The table below gives you complete information on which pin of the Power Unit's front I/O connector must be connected to the external booster capacitor depending on which of the unit's slots the PS-DINJ 2/1 module is inserted in:

PS-DINJ 2/1 Module's Slots on the Power Unit	Power Unit's Front I/O Connector	Signal (Pin) to Connect the Positive Capacitor Pole (+)		Signal (Pin) to Connect the Negative Capacitor Pole (-)
1 + 2	F1	S2_IO4 (24)	S2_IO5 (11)	GND1 (A1)
2 + 3	F1	S3_IO4 (16)	S3_IO5 (3)	GND1 (A1)
4 + 5	F2	S5_IO4 (20)	S5_IO5 (7)	GND2 (A1)
5 + 6	F2	S6_IO4 (24)	S6_IO5 (11)	GND2 (A1)

The signal names and pin numbers correspond to the Power Unit's pinout (see *Front Panel Connectors* in the *RapidPro System Installation and Configuration Reference*).

The illustration below shows a booster capacitor that is connected to the F1 front I/O connector of a Power Unit. In this example, the PS-DINJ 2/1 module is inserted in slot 1 and slot 2 of the Power Unit.

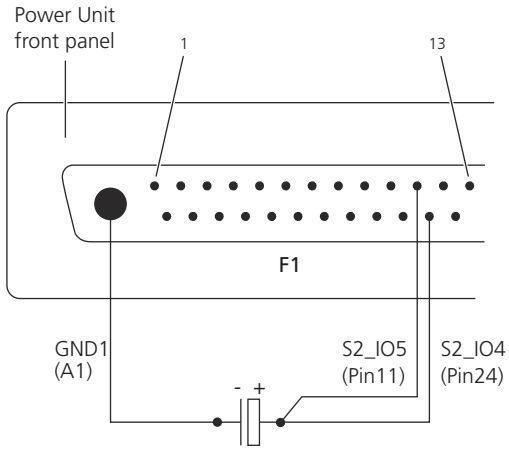

Connection requirements

Note

- Twist both the positive signal lines with the negative signal line to reduce the wire inductance.
- Keep the connections to the DINJ_UBOOST_EXT pins and battery ground as short as possible and not longer than 20 cm (7.87 in.).
- Use signal lines with a minimum cross-section of 1.5 mm^2 (≈ 15 AWG).

Notes on Connecting an External Booster

Objective

The PS-DINJ 2/1 module provides pins to connect an external voltage supply, if the performance of the module-internal booster is not sufficient for your field of application.

Booster mode in ConfigurationDesk for RapidPro

You must set the Booster mode in ConfigurationDesk for RapidPro to External booster if you connect an voltage supply to the module.

Requirements for the power supply

Requirements for the power supply used as external booster:

- It must be able to deliver the load current for the whole slew rate. A voltage drop extends the rise time.

- It must be able to sink current, or must be equipped, for example, with electrolytic capacitors of sufficient size to take the clamping energy, and an appropriate surge suppressor across the output of the voltage supply.

Connecting an external power supply

To connect an external voltage supply you must use both available DINJ_UBOOST_EXT pins and you must connect them to the same reference potential the RapidPro system is connected to.

Note

- If you connect an external voltage supply, you have to set the maximum boost voltage parameter via ConfigurationDesk for RapidPro to the lowest level (6 V).
  This is to avoid damage to the module and the external voltage supply.
- Regardless of whether the Enable external boost voltage input is enabled or disabled (via ConfigurationDesk for RapidPro), an external boost voltage is fed to the PS-DINJ 2/1 module if the voltage is higher than the specified internal boost voltage.
- It is recommended to keep the connections to the DINJ_UBOOST_EXT pins and battery ground as short as possible.

NOTICE

Unwanted voltage surges can damage the hardware!

You must use an external boost voltage source that is protected against voltage surges.
You can take additional measures, such as:

- Connecting electrolytic capacitors of sufficient size to take the clamping energy.
- Connecting an appropriate surge suppressor across the output of the voltage supply.

Driving High Inductive Loads (Approx. > 1 mH)

Objective

The PS-DINJ 2/1 Module (DS1664) is designed to drive inductive loads such as electromagnetic injection valves. To achieve a load current with a short rise time, the DS1664 can generate very high output voltages. Due to the nature of inductance, this is the only way to obtain short rise times with a given inductivity.

Although the DS1664 is primarily designed to control low inductive loads (e.g., 250 µH), the module can also drive large inductive loads (several mH), if you note the module behavior as described below.

Points to note

If you want to drive high inductive loads, note the following behavior of the module:

- The UBOOST voltage is applied to the load only during the rise phase of the load current. Once the desired maximum output peak current is reached, it is not necessary to provide the UBOOST voltage to maintain the peak current. Instead the battery voltage (UBAT) is used to maintain the peak current for the entire remaining duration of the load pulse. Refer to diagram B and C in the illustration below.
- The maximum achievable output peak current can never be higher than that given by the following definition:

$$I_PeakMax \leq \frac{UBAT}{R_Load}$$

UBAT : Battery voltage measured directly at the power supply input pins of the Power Unit.
R_Load: Load resistance including the cable resistance between the Power Unit and the load.

All load current settings in the properties dialog of ConfigurationDesk for RapidPro must satisfy the definition above. If your settings do not match this definition, unexpected behavior of the PS-DINJ 2/1 module will be the result, and diagnostic messages will be generated by the module.

- The UBOOST voltage is provided by an internal booster circuit. The energy available for driving loads is stored in an internal booster capacitor. Due to the limited capacity and limited booster voltage, the maximum energy stored in this capacitor is limited:
  - Approximately 700 mJ (board revision number from DS1664-05-002, serial number from 341200 onwards, shipped since May 2010)
  - Approximately 300 mJ (all former modules)
- Due to the limited energy stored in the booster capacitor, the boost voltage will drop during the rise phase. Refer to diagram D in the illustration below.

  The larger the load inductance and the load current are, the larger the voltage drop will be. With injection valves with low inductivities, the voltage drop is negligible. With large inductive loads such as exhaust valves, a large voltage drop can be expected. In the worst case the booster voltage might drop to the level of the battery voltage. The relationship between the load inductance (L_Load), the maximum output peak current (I_PeakMax) and UBOOST is expressed by the following definition:

$$L_Load \times I_PeakMax^2 < C_Boost \times UBOOST^2$$

C_Boost: Booster capacitor

- Approximately 140 µF (shipped since May 2010)
- Approximately 65 µF (all former modules)

The maximum output peak current settings and the UBOOST voltage setting in the properties dialog of ConfigurationDesk for RapidPro must satisfy the definition above. If your settings do not match this definition, unexpected behavior of the PS-DINJ 2/1 module will be the result, and diagnostic messages

will be generated. If this definition cannot be matched, you can use an external booster capacitor or an external boost voltage supply. The capacity of the external booster capacitor should not exceed 220 µF.

- The duration of the peak phase must always be larger than the load current rise time (T_Rise) to be expected. Refer to diagram A and B in the illustration below.

  You have to ensure that the peak input control signal is active until the desired maximum output peak current is reached. Otherwise, open load diagnostic messages might be generated by the module. In single control signal mode, you have to ensure that the duration of the peak phase is configured correctly via ConfigurationDesk for RapidPro. The following formula can be used to roughly estimate the load current rise time:

  $$T_Rise = \frac{L_Load \times I_PeakMax}{UBOOST}$$

  This equation is valid only if all the other requirements above are met and if UBOOST and L_Load are constant. If a voltage drop occurs during the rise phase or if the load inductance decreases with increasing load current, real timing measurements might differ from the value calculated by the formula above.

- When you operate the DS1664, it is strongly recommended to observe its diagnostic messages closely, either via ConfigurationDesk for RapidPro or by usage of the RPCU_DIAGNOSIS block of the RTI RapidPro Control Unit Blockset.

  Note that the RPCU_DIAGNOSIS block can only be used when the DS1664 is installed in a RapidPro system which is used as a slave I/O subsystem.

Timing diagram

The following illustration shows the relationship between the most important signals of the DS1664 module. Note that the load current and the booster voltage can be monitored at the rear I/O connector of the Power Unit via the DINJ_U(I)_OUT and DINJ_UB_MON_OUT signals.

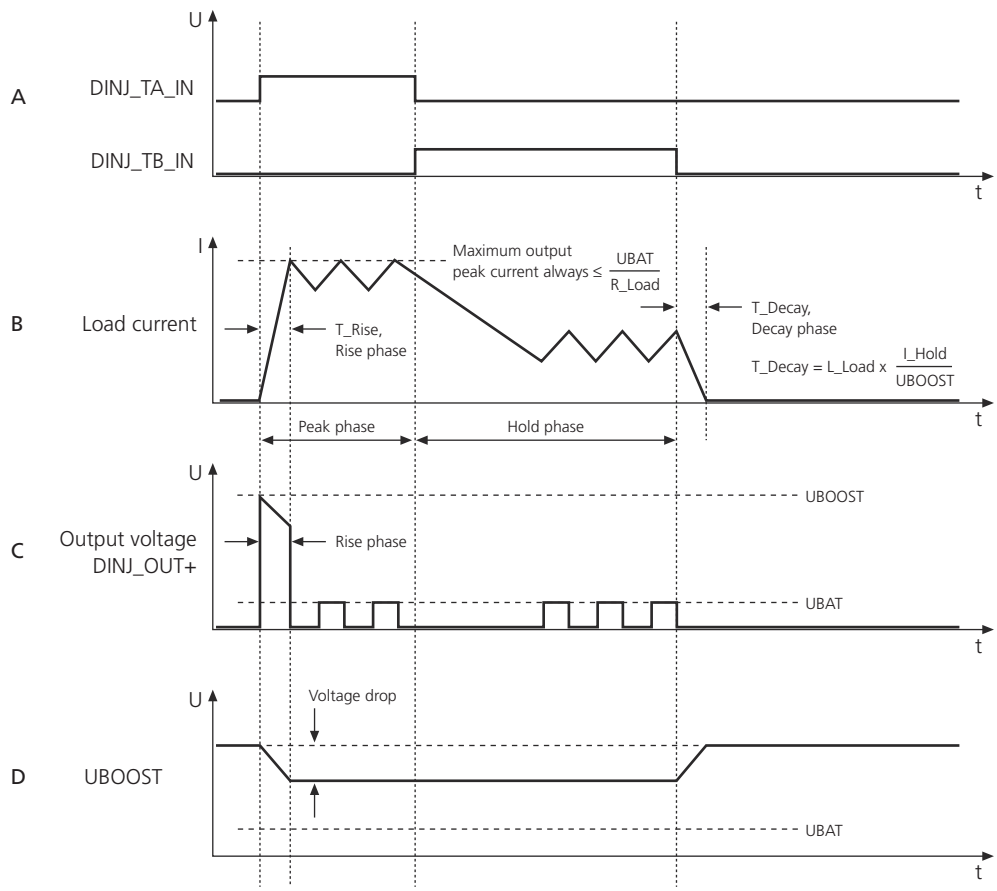

Further information

For further information on the module, for example, the I/O circuit, refer to PS-DINJ 2/1 Module on page 427.

Module in Use

Objective

During operation you can access status information of the PS-DINJ 2/1 module via ConfigurationDesk for RapidPro. The module provides:

- Continuous monitoring of the module's temperature
- Diagnostic messages about the status of the module and the status of the connection to external devices

Where to go from here

Information in this section

Monitoring.....450
Diagnostics.....450

Monitoring

Monitored parameters

The PS-DINJ 2/1 provides monitoring of the following parameters:

Parameter	Description	Valid
Temperature sensor T1, T2	The temperature is measured on the module's circuit board. It serves troubleshooting purposes.	For the module

Diagnostics

Diagnostic warnings and diagnostic errors

The diagnostic messages can be divided into warnings and errors.

- Diagnostic warnings occur if a fault is detected. Each warning is dropped as soon as the reason for it is removed.
- Diagnostic errors cause the module functions to be disabled (= shutdown). If a diagnostic error occurs, you have to remove the source of the error and reset the module's diagnostics via ConfigurationDesk for RapidPro.

Precondition to get diagnostic messages

ConfigurationDesk for RapidPro can receive diagnostic messages about channels sent by the RapidPro modules only if the RapidPro system is in execution mode. For further information, refer to Basics on the Display of Diagnostic Messages (ConfigurationDesk for RapidPro - Guide 🕮).

Possible diagnostic messages

Diagnostic Message		Description	Valid
Warning	Temperature warning	The temperature of the module has reached a value of approx. 95 °C (203 °F).	All channels
	Overtemperature	The temperature of the module has reached a critical value of approx. 105 °C (221 °F) and the outputs are disabled. If the temperature falls, the outputs are enabled again.	
	Open load or current pulse too short	At least one channel is driven via input signal(s), but no load is connected to the output. – or – The peak timing signal of the peak A phase of a specific channel is low before the load current has reached the upper threshold.	
Error	Timeout during peak phase	The adjustable timer of the peak phase timeout supervision has expired and the peak A or peak B phase is still active. As a result, the module is set to shutdown mode immediately. For information on adjusting the timer, refer to Configuration via ConfigurationDesk for RapidPro on page 435.	Per channel
	Timeout during hold phase	The adjustable timer of the hold phase timeout supervision has expired and the hold phase is still active. As a result, the module is set to shutdown mode immediately. For information on adjusting the timer, refer to Configuration via ConfigurationDesk for RapidPro on page 435.	
	Short circuit	The message occurs in either of the following cases: ▪ There is a short circuit between the module's output pins (DINJ_OUT- and DINJ_OUT+) [1), 2)] ▪ An output pin is connected to UBAT. [1), 2)] ▪ An output pin is connected to GND. [1)]	All channels
	Overcurrent	The sum of the currents on the DINJ_BOOST_EXT pins exceeds 3 A. [1)]	
	Overvoltage	The maximum permissible voltage on the module's internal booster capacitors is exceeded. [1)] The message occurs If there are high load currents on a large load inductance. The message can occur if you do not connect loads to both channels of the module (see Avoiding negative	

Diagnostic Message		Description	Valid
		effects on the output signal's timing accuracy on page 442).	
	Shutdown	Both channels are set to shutdown mode. This means module functions are disabled.	

1) The module retries detection within five seconds. If the reason for the diagnostic error is not removed in this time, the module is set to shutdown mode.

2) The minimum rise time of the load current is 5 µs. A lower rise time is detected as a short circuit. The rise time depends on the load's inductance, the boost voltage, and the peak current.

Data Sheet

Where to go from here

Information in this section

PS-DINJ 2/1 Data Sheet.....453
This gives you a complete overview of the module's technical data.

PS-DINJ 2/1 Configuration Template.....454
You can copy and/or print out the template and use it as a master to document your configuration settings.

PS-DINJ 2/1 Data Sheet

Technical data

Parameter	Specification [1)]
Identification	Top view 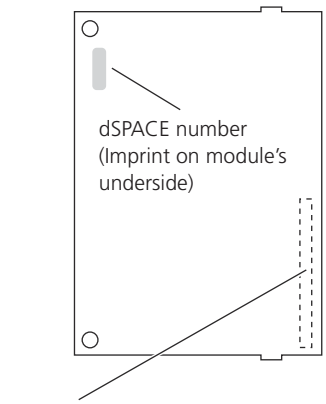 Imprint on module: DS1664
Channels	2 channels with common booster to connect injection valves

Software	▪ ConfigurationDesk 1.1.2 (on dSPACE Release 5.2) or later is required to work with the PS-DINJ 2/1 module.
	▪ The following features are supported as of ConfigurationDesk 1.2.1 (on dSPACE Release 5.4) with plug-in software:
	  ▪ Software-selectable booster mode
	  ▪ Software-selectable operation mode

Parameter		Specification [1]
Diagnostics		Temperature warning, overtemperature, timeout during peak phase, timeout during hold phase, open load or current pulse too short, short circuit, overcurrent, overvoltage, shutdown.
Operating voltage [2]		+6 V … +60 V
Operation mode		Software-configurable: ▪ Double control signal mode ▪ Single control signal mode
Peak A current	Maximum	30 A
	Minimum	2 A
	Upper threshold	2 … 30 A
	Lower threshold	2 … 30 A
Peak B current	Maximum	30 A
	Minimum	2 A
	Upper threshold	2 … 30 A
	Lower threshold	2 … 30 A
Hold current	Maximum	30 A
	Minimum	2 A
	Upper threshold	2 … 30 A
	Lower threshold	2 … 30 A
Minimum load current ripple		1 A [3]
Internal booster		6 … 100 V
External booster		Up to 100 V
Physical size (length x width)		▪ 60 x 85.5 mm (2.36 x 3.14 in.) ▪ Requires two slots

[1] Unless stated otherwise, the specifications are valid only if the dSPACE hardware is correctly powered, switched on, and ready for operation.

[2] The voltage for putting the module into operation is applied on the Power Unit's power supply inputs UBAT1 (rail 1) and UBAT2 (rail 2). For further information, refer to Calculating the Maximum Permissible Rail Supply Voltage on page 125.

[3] The actual ripple can differ from your setting in ConfigurationDesk for RapidPro for high battery voltages and/or small load inductances. This occurs due to certain delays and filter time constants of the current measurement circuit. Especially the rising edge of the load current can exceed the given peak current upper limit for large boost voltages and/or small load inductances.

PS-DINJ 2/1 Configuration Template

Objective

You can use the following template to document the settings of your module.

Identification and location

Enter the following parameters to identify and locate the module unambiguously.

Parameter		Specification	Label Location
Identification	dSPACE number	1664	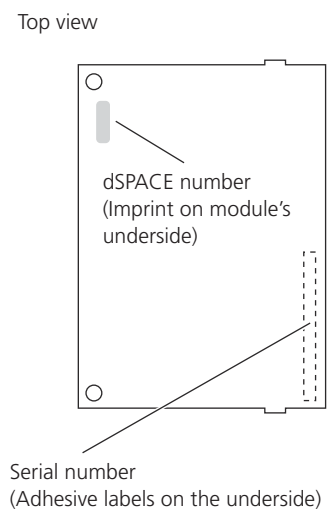
	Serial number		
	Module variant		
Place of installation	System name (unit/stack name)		
	Layer number(s) (unit position in a stack)		
	Slot number (slot on the unit's carrier board)		

Software configuration

Enter the settings for each channel in the table below:

Parameter	CH1	CH2
Channel name		
Peak A current upper limit (2 A … 30 A)		
Peak A current lower limit (2 A … 30 A)		
Peak A duration (0.00000 … 16.00000 ms) [1]		
Peak B current upper limit (2 A … 30 A) [2]		
Peak B current lower limit (2 A … 30 A) [2]		
Hold current upper limit (2 A … 30 A)		
Hold current lower limit (2 A … 30 A)		
Operation mode		
Boost voltage (UBAT … 100 V)		
Timeout peak (0 s … 6.55 s)		
Timeout hold (0 s … 6.55 s)		
Booster mode		

[1] Enabled in Single control signal mode.
[2] Disabled in Single control signal mode.

PS-HCFBD 1/1 Module

Short description

The PS-HCFBD 1/1 module (DS1667) is a high-current, full-bridge power stage module with one channel for driving bidirectional loads such as DC motors (e.g, in 12 V power supply systems). It provides two control inputs and can drive one load connected at the two outputs.

Where to go from here

Information in this section

Module Overview.....458
Information on the module's features, components, and functionality will help you assess its possible uses.

Software Configuration.....463
The PS-HCFBD 1/1 module provides parameters which are software-configurable via ConfigurationDesk for RapidPro.

Hardware Configuration.....465
The PS-HCFBD 1/1 module provides user-configurable circuits to add electronic components (i.e., capacitors) to the output circuits of the module.

Connection to Loads.....470
You can use the PS-HCFBD 1/1 module as a full-bridge driver and you have to note a few points connecting loads.

Module in Use.....471
You have access to information (i.e., temperatures on the circuit board) which the module provides during operation.

Data Sheet.....475
The data sheet summarizes the technical data of the PS-HCFBD 1/1 module; there is also a template that you can use as a master to document your configuration settings.

Module Overview

Where to go from here

Information in this section

Module Features.....458
Module Components and Functionality.....458

Module Features

Main features

The main features of the PS-HCFBD 1/1 module are:

- One full-bridge driver output for driving loads
- Output current:
  - Max. 60 A for one second, 30 A continuous (depends on the housing temperature of the unit/stack)
- Chopper current limitation of the output current, for example, to reduce power dissipation, if a DC motor seizes.
- Current measurement device with passive low-pass filter (hardware-configurable)
- Diagnostic functions
- Protection against overcurrent, overtemperature
- Operating voltage: 6 … 20 V

Software

ConfigurationDesk 1.1 (on dSPACE Release 5.0) or later is required to work with the PS-HCFBD 1/1 module.

More features

For a complete list of the module's features, refer to PS-HCFBD 1/1 Data Sheet on page 475.

Module Components and Functionality

Objective

The module's components are shown on the basis of its simplified I/O circuit. More detailed descriptions of the components are given if their functions are not clear from the I/O circuit.

I/O circuit

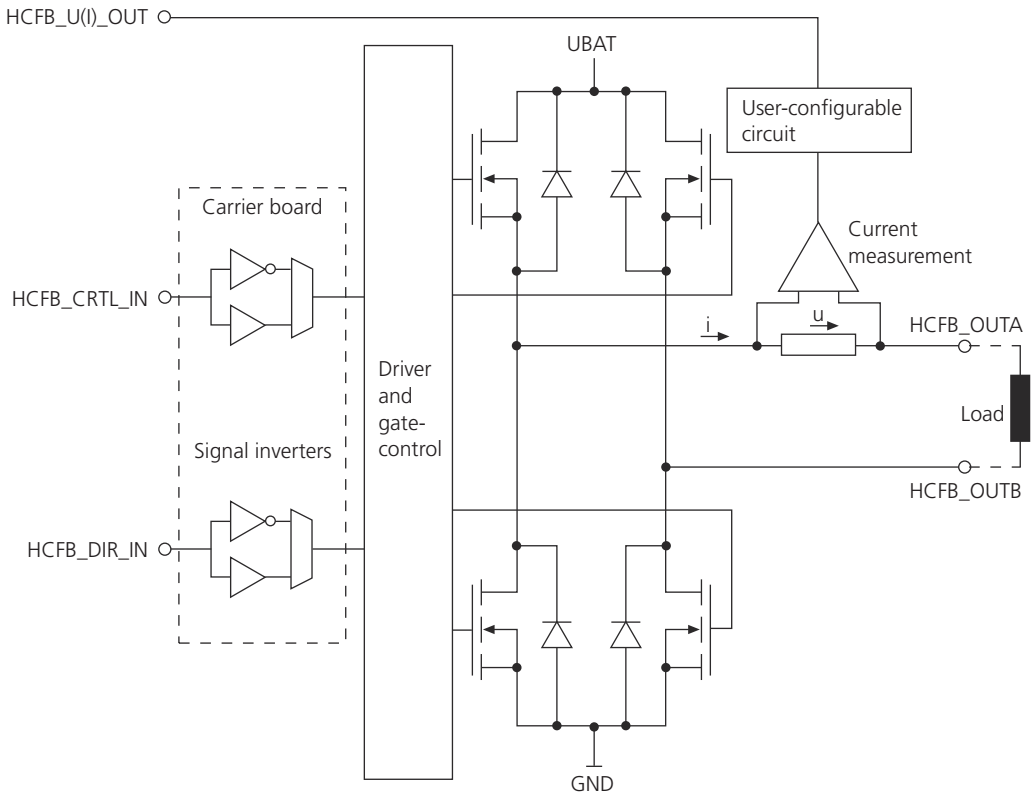

Control inputs (CTRL and DIR)

The power stages are controlled by the inputs HCFB_DIR_IN and HCFB_CTRL_IN. The DIR input determines the direction of the output current, while the CRTL input controls whether the current is increased (= "1") or decreased (= "0").

Signal inverter

The logic level of the control inputs can be inverted by a signal inverter, which is integrated on the unit's carrier board. You can configure the signal polarity via ConfigurationDesk for RapidPro. For details, refer to Software-configurable parameters on page 463.

Current measurement

The current measurement device of the channel provides a low-pass filter. The load current is measured via a shunt resistor. The current measurement signal is available at an output pin (HCFB_U(I)_OUT). It can be used as an analog current feedback for closed-loop applications.

Note

The behavior of the load current and therefore the behavior of the corresponding current measurement signal strongly depends on the kind of load and the control signal. The following table is based on the behavior of resistive loads. It shows the dependencies between the control inputs and the polarity of the current measurement signal.
A load current flowing in the direction shown by the arrow in the illustration above results in a negative current measurement signal in relation to zero scale.

Operating Mode	Control Inputs		HCFB_ OUTA	HCFB_ OUTB	Polarity of Current Measurement Signal
	HCFB_DIR_IN	HCFB_CTRL_IN			
Slow decay [1]	0 [2]	0 [3]	High	High	Freewheel [4]
	1	0	H	H	Freewheel
	0	1	H	Low	– [5]
	1	1	L	H	+ [5]
Fast decay [6]	0	0	L	H	+
	1	0	H	L	–
	0	1	H	L	–
	1	1	L	H	+

[1] The supply voltage (UBAT) and a short circuit is generated alternately for the load.
[2] 0 = logic low level
[3] 1 = logic high level
[4] Freewheel means that the direction of the load current depends on the previous direction. With inductive loads the direction of the current does not change, but the value decreases until the state of the control signal changes. With resistive loads, the value of the load current decreases to zero.
[5] + means: positive signal in relation to zero scale. – means: negative signal in relation to zero scale. Zero scale: 0 V for voltage range –5 V … +5 V and 2.5 V for voltage range 0 … +5 V
[6] An alternating voltage is generated for the load.

Tip

To scale the output of the current measurement, refer to Scaling the Output Voltages of the Current Measurement Device on page 473.

Switching status of the power stages

The table below gives an overview of the switching status of the power stages:

Setting	Switching Status of the Power Stages
Slow decay	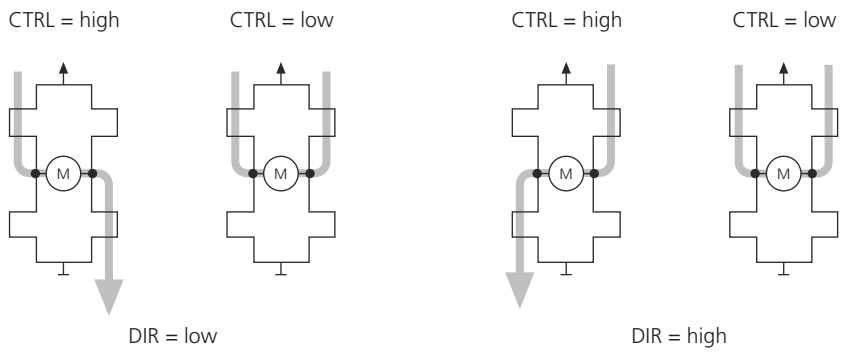
Fast decay	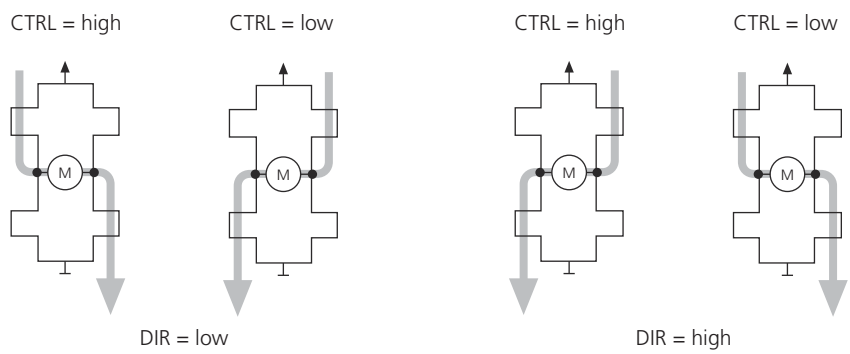

User-configurable circuit

The current measurement output provides a first-order low-pass filter. You can change the cutoff frequency of the current measurement device.

For further information on the user-configurable circuit, refer to Overview of User-Configurable Circuit on page 465.

Chopper current limitation

An integrated chopper current limitation limits the output current, for example, to reduce power dissipation, if a DC motor seizes.

As soon as the current limit is reached, the low-side switches off for a fixed time (= chopper off-time). The illustration below shows the time characteristic of the output current if an inductive load is connected.

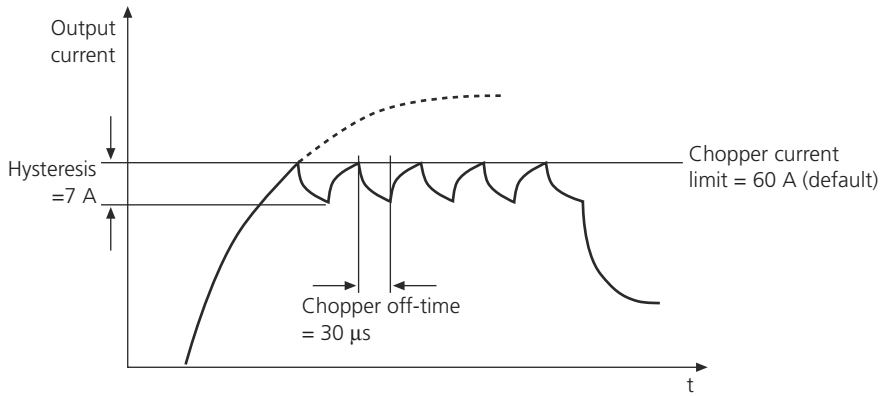

Restriction of the Power Unit's maximum operating voltage

The maximum possible operating voltage of the Power Unit is restricted to +20 V, if a PS-HCFBD 1/1 module is installed.

The voltage for putting the module into operation is applied on the Power Unit's power supply inputs UBAT1 (rail 1) and UBAT2 (rail 2). If this voltage is higher than 20 V, the channel of the module which is supplied by the affected rail are deactivated.

Software Configuration

Configuration via ConfigurationDesk for RapidPro

Objective

Various parameters of the module are configurable via ConfigurationDesk for RapidPro. In addition, the software provides module-specific edit fields to document the values of the soldered components of the user-configurable circuit. This information on the hardware is stored on the module.

Software-configurable parameters

Parameter	Range/Setting	Factory Default Setting	Description
Operating mode	▪ Fast decay ▪ Slow decay	Slow decay	▪ Fast decay: An alternating voltage is generated for the load. ▪ Slow decay: The load is alternately connected between UBAT and GND and shorted with both pins. During a short circuit, both pins are connected to UBAT.
CTRL input signal polarity	▪ Non-inverted ▪ Inverted	Non-inverted	You can set the input signal polarity of the HCFB_CTRL_IN pin.
DIR input signal polarity	▪ Non-inverted ▪ Inverted	Non-inverted	You can set the input signal polarity of the HCFB_DIR_IN pin.
Output voltage range	▪ 0 … +5 V ▪ –5 V … +5 V	0 … +5 V	*Installed in a Power Unit that is used as single unit:* The output voltage configuration allows you to adapt the analog outputs to different types of dSPACE I/O boards.
			Installed in a Power Unit in a stack with unit connection bus (UCB): The output voltage is fixed at 0 … +5 V.

⚠ WARNING

Choosing the fast-decay mode can cause uncontrolled movements and/or material damage of connected devices.

In fast-decay mode, both input signals (HCFB_DIR_IN and HCFB_CTRL_IN) are set to low level if you build a Simulink model without connecting PWM signals to the full-bridge. This means that a connected motor starts if you download your application and no PWM signals are connected to the module inputs. If you invert the polarity of the signals via ConfigurationDesk for RapidPro, high-level signals trigger the described behavior.

To avoid risk of injury and material damage:

- When building the Simulink model, think through the effects of the connections you are planning and the settings of the modules.
- Ensure that no one is in the potential danger zone of the device (test bench, etc.) when the changes first take effect.

Hardware information

You can enter information about the user-configurable circuit on the module-specific properties dialog. The information is stored on the module as reminders and does not affect the channel's behavior.

The following table shows the relation between the parameter names used in ConfigurationDesk for RapidPro and the names of the components used in the user-configurable circuit:

Parameter in ConfigurationDesk for RapidPro	Component in the Output Circuit	Description
Low-pass filter frequency (100 Hz … 10000 Hz)	X1, X2	You can edit the value of the cut-off frequency of the current measurement filter (in Hz).

If the components were soldered by dSPACE according to your order, the specific values are already stored.

For a detailed circuit illustration, refer to Overview of User-Configurable Circuit on page 465.

Related topics

References

PS-HCFBD 1/1 Configuration Template 477

Hardware Configuration

Objective

Additional electronic components can be added to adapt the PS-HCFBD 1/1 module to the specifics of your application. The module provides solder pads where you can solder components like capacitors in user-configurable circuits.

Where to go from here

Information in this section

Overview of User-Configurable Circuit.....465

Solder Pads and Component Requirements.....466

Configuration Example: Configuring the Low-Pass Filter for Current Measurement.....467

Overview of User-Configurable Circuit

Objective

You can change the capacitors of the low-pass filter to adjust it to a specific filter frequency.

Components of the user-configurable circuit

The following illustration shows the user-configurable circuit of the PS-HCFBD 1/1 module.

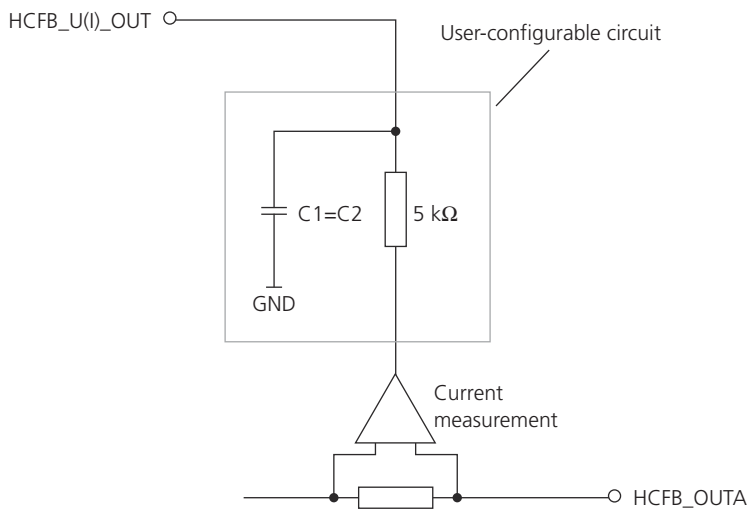

Factory default settings

The settings depend on your order as follows:

- If you did not specify components in your order, the user-configurable circuit is equipped with:
  - X1 = 4.7 nF
  - X2 = 4.7 nF

  This results in a filter frequency of 6.7 kHz. For details, refer to Configuration Example: Configuring the Low-Pass Filter for Current Measurement on page 467.
- If you specified components in your order, they were soldered by dSPACE.

Hardware information in ConfigurationDesk for RapidPro

ConfigurationDesk for RapidPro provides a module-specific properties dialog where you can edit the values of the soldered components as reminders for each channel on the module.

For the relevant parameters, refer to Hardware information on page 464.

Related topics

Basics

Changing the Hardware Configuration of SC/PS Modules (RapidPro System Hardware Installation Guide 🕮)
Changing the Installation of SC/PS/COM Modules (RapidPro System Hardware Installation Guide 🕮)

Solder Pads and Component Requirements

Objective

The PS-HCFBD 1/1 module provides solder pads to add components on the module's circuit board.

Positions of solder pads

The following illustration shows the underside of the PS-HCFBD 1/1 module. It shows the positions of the solder pads for the user-configurable circuit.

View of underside

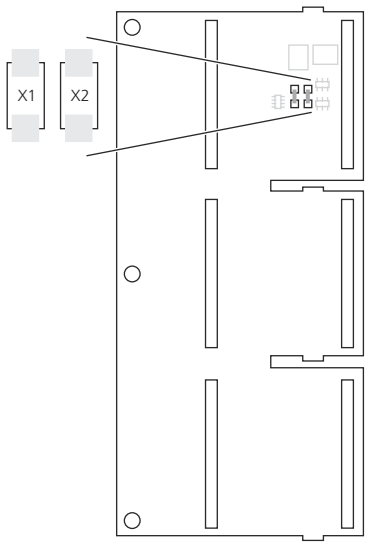

Component requirements

The circuit board is designed for soldering standard 1206 size SMDs (surface mounted devices). The capacitors must be a ceramic type of X7R.

Related topics

Basics

Changing the Hardware Configuration of SC/PS Modules (RapidPro System Hardware Installation Guide 🕮)
Changing the Installation of SC/PS/COM Modules (RapidPro System Hardware Installation Guide 🕮)

Configuration Example: Configuring the Low-Pass Filter for Current Measurement

Objective

To use the current measurement as an analog current feedback, you can equip the current measurement output with a first-order low-pass filter. You can configure the –3 dB cut-off frequency for the filter by soldering capacitors.

Calculating the cut-off frequency

The cut-off frequency fg of the low-pass filter is easy to calculate with the formula below:

$$fg_{HCFB_U(I)_OUT} = \frac{1}{2 \times \pi \times 5\ k\Omega \times C}$$

with C = C1 = C2

Note

It is strictly recommended to use capacitors which are identical in construction and value.

Assignment of the components

The illustration below shows the components:

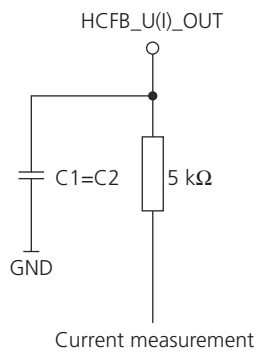

Note

The circuit above is simplified. The capacitors are not actually parallel.

Example values

The following table shows standardized component values for different cut-off frequencies:

Cut-off Frequency fg	Resistor R	Capacitor X1	Capacitor X2
9.6 kHz	5 kΩ	3.3 nF	3.3 nF
6.7 kHz		4.7 nF	4.7 nF
4.7 kHz		6.8 nF	6.8 nF
3.2 kHz		10 nF	10 nF
2.1 kHz		15 nF	15 nF
1.4 kHz		22 nF	22 nF
1 kHz		33 nF	33 nF
700 Hz		47 nF	47 nF
500 Hz		68 nF	68 nF

Note

The value of the resistor R cannot be changed.

Related topics

Basics

Changing the Hardware Configuration of SC/PS Modules (RapidPro System Hardware Installation Guide 🕮)
Changing the Installation of SC/PS/COM Modules (RapidPro System Hardware Installation Guide 🕮)

Connection to Loads

Objective

You have to use the PS-HCFBD 1/1 module as a full-bridge driver.

Driving Loads

Connection example

The PS-HCFBD 1/1 module is designed for driving loads in full-bridge mode. The load must be connected to the HCFB_OUTA pin and the HCFB_OUTB pin as shown in the illustration below.

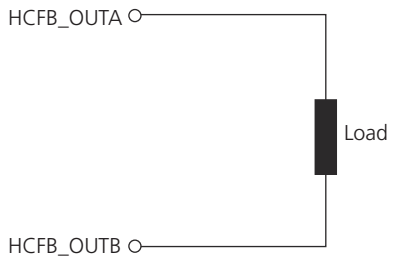

Connecting output pins

The HCFB_OUTA and HCFB_OUTB outputs are each available at 12 pins on the Power Unit's front connectors.

Note

- Connect all the output pins to the load to get the maximum output current.
- Star point connection is recommended for connecting the pins to the load. The star point must be located as close as possible to the outside of the matching Sub-D connector that is connected to the Power Unit.

For basic information on proper cabling, such as aspects of grounding, shielding, and wiring up external devices, refer to Proper Cabling (RapidPro System Hardware Installation Guide 🕮).

Module in Use

Objective

During operation you can access status information of the PS-HCFBD 1/1 module via ConfigurationDesk for RapidPro. The module provides:

- Continuous monitoring of the module's temperature
- Diagnostic messages about the status of the module and the status of the connection to external devices

Where to go from here

Information in this section

Monitoring.....471
Diagnostics.....472
Scaling the Output Voltages of the Current Measurement Device.....473
Measuring RMS Values.....474

Monitoring

Objective

The PS-HCFBD 1/1 module supports monitoring hardware specifics, such as temperatures on the module's circuit board. You can access this information via ConfigurationDesk for RapidPro.

Monitored parameters

The PS-HCFBD 1/1 provides monitoring of the following parameters:

Parameter	Description
Temperature sensor T1, T2	The temperature is measured in two positions on the module's circuit board. The monitored temperatures serve for troubleshooting purposes.

Positions of temperature sensors

The following illustration shows the topside of the PS-HCFBD 1/1 module, with the positions of the temperature sensors. The temperature sensors are located near the output driver stages of each half-bridge.

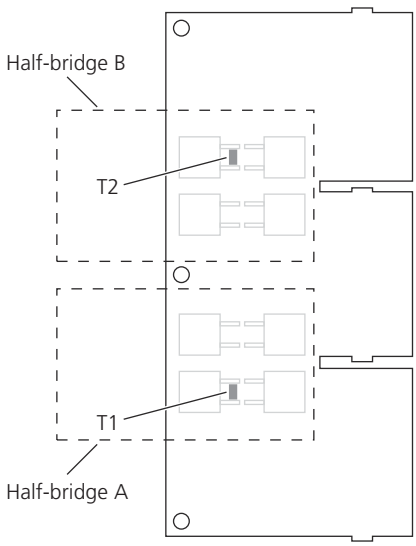

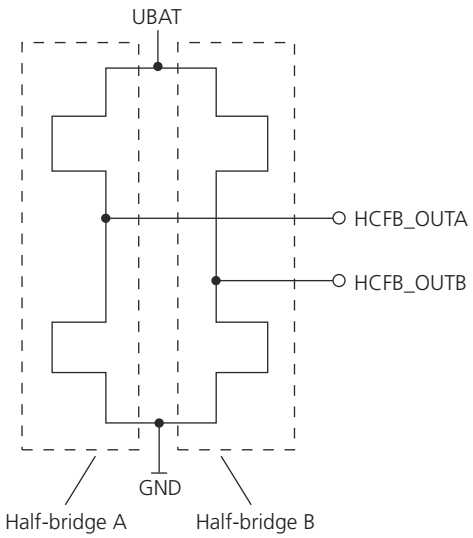

Diagnostics

Diagnostic warnings and diagnostic errors

The diagnostic messages can be divided into warnings and errors.

- Diagnostic warnings occur if a fault is detected. Each warning is dropped as soon as the reason for it is removed.
- Diagnostic errors cause the module functions to be disabled (shutdown). If a diagnostic error occurs, you have to remove the source of the error and reset the module's diagnostics via ConfigurationDesk for RapidPro.

Note

Depending on where a PS-HCFBD 1/1 module is inserted (rail 1 – slots 1 … 3, or rail 2 – slots 4 … 6), the corresponding front I/O connector of the Power Unit must be connected to the power supply. Otherwise you get unpredictable diagnostic messages.

Precondition to get diagnostic messages

ConfigurationDesk for RapidPro can receive diagnostic messages about channels sent by the RapidPro modules only if the RapidPro system is in execution mode. For further information, refer to Basics on the Display of Diagnostic Messages (ConfigurationDesk for RapidPro - Guide 🕮).

Possible diagnostic messages

The PS-HCFBD 1/1 module provides the following diagnostic messages via ConfigurationDesk for RapidPro:

Diagnostic Message		Description
Warning	Overcurrent	The output current is limited to 60 A (default setting, unless changed according to your order). If this limit is exceeded, the message "Overcurrent" is displayed. The module functions as a current limiter. For details, refer to Chopper current limitation on page 461.
	Overheat	At least one of the temperature sensors (T1, T2) has reached a critical value of approx. 105 °C (221 °F) and the outputs are deactivated. If the temperature falls below 100 °C (212 °F) the outputs are reactivated.
Error	–	The PS-HCFBD 1/1 module does not provide diagnostic errors.

Scaling the Output Voltages of the Current Measurement Device

Objective

The module's current measurement device provides voltages as measurement result. You need to scale these voltages to get the current values.

Formulas to scale the voltages on the rear I/O connectors

The values of the scaling formula and the formula itself depend on the settings of the module. The gain value is a result of the settings Output Voltage Range and Current Measurement Range. You can use the following formulas to scale the voltages on the specific rear connector pins of a Power Unit used as single unit.

Output Voltage Range	Current Measurement Range	Gain	Scaling Formula
0 … 5 V	± 60 A	24 A/V	$I_{HCFB_U(I)_OUT}$ = 24 A/V x HCFB_U(I)_OUT – 60 A
– 5 V … + 5 V [1]		12 A/V	$I_{HCFB_U(I)_OUT}$ = 12 A/V x HCFB_U(I)_OUT

[1] Only adjustable if the module is installed in a Power Unit that is used as single unit.

Formula for the RPCU_ADC_BLx block

If the PS-HCFBD 1/1 module is installed in a Power Unit that is used in a RapidPro stack with UCB, the current measurement output is represented by the output of the RPCU_ADC_BLx block of the RTI RapidPro Control Unit Blockset. You can use the following formulas to get the current values.

Output Voltage Range	Current Measurement Range	Scaling Formula
0 … 5 V	± 60 A	$I_{MUX_ADC_out}$ = 120 A x MUX_ADC_out – 60 A

For further information, refer to Basics on A/D Conversion (RapidPro System – I/O Subsystem MPC565 Implementation Features 🕮).

Related topics

References

PS-HCFBD 1/1 Data Sheet 475
RPCU_ADC_BLx (RapidPro System – I/O Subsystem MPC565 RTI Reference 🕮)

Measuring RMS Values

Objective

When measuring RMS (root mean square) values note that many multimeter only cover the AC part of the signal, even if they measure in *true-RMS mode*.

Avoiding measuring errors

You can calculate the RMS value with the following formula:

$$I_{RMS} = \sqrt{(I_{DC})^2 + (I_{AC})^2}$$

- I_{DC} = measured across shunt with multimeter in DC operation mode
- I_{AC} = measured across shunt with multimeter in true-RMS mode

Related topics

References

PS-HCFBD 1/1 Data Sheet 475

Data Sheet

Where to go from here

Information in this section

PS-HCFBD 1/1 Data Sheet.....475
This gives you a complete overview of the module's technical data.

PS-HCFBD 1/1 Configuration Template.....477
You can copy and/or print out the template and use it as a master to document your configuration settings.

PS-HCFBD 1/1 Data Sheet

Technical data

Parameter	Specification
Identification	Top view 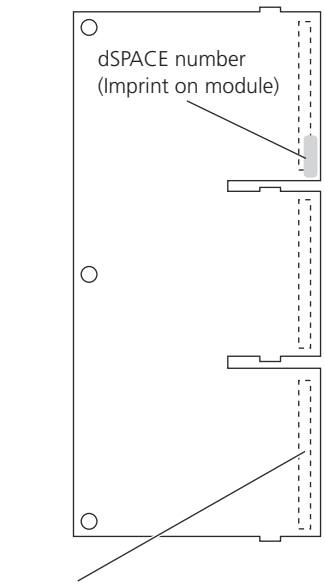 dSPACE number: DS1667
Channels	1 power stage channel to be used as full-bridge driver output

Parameter		Specification
Software		ConfigurationDesk 1.1 (on dSPACE Release 5.0) or later is required
Diagnostics		Overcurrent, overheat
Output current [1]	Max. value	$T_{Housing}$ = +25 °C (+77 °F) ▪ 42 A_{RMS} continuous; For information on avoiding measurement errors, refer to Measuring RMS Values on page 474. ▪ 60 A peak for 1 second
		$T_{Housing}$ = +60 °C (+140 °F) ▪ 29 A_{RMS} continuous; For information on avoiding measurement errors, refer to Measuring RMS Values on page 474. ▪ 60 A peak for 1 second
	Current limitation	60 A
	Hysteresis	7 A
	Chopper-off time	30 µs
Output resistance Ri		≈ 4 mΩ [2]
Operating voltage [3]		6 … 20 V
CTRL and direction control	Operation mode	Fast decay, slow decay (software-configurable)
	CTRL input signal polarity	Inverted, non-inverted (software-configurable)
	DIR input signal polarity	Inverted, non-inverted (software-configurable)
Current measurement device	Output voltage range	0 … +5 V, –5 V … +5 V (software-configurable)
	Absolute measurement error [4]	1% ±600 mA
	Filter	1st order low-pass filter (hardware-configurable)
Isolation		Level shifter: to eliminate ground potential differences between dSPACE RCP system (like MicroAutoBox) and the RapidPro Power Unit
Protection		▪ Overcurrent ▪ Overheat
Physical size (length x width)		▪ 60 x 129 mm (2.36 x 5.08 in.) ▪ Requires three slots

[1] The items represent the default settings, if the module is not changed by dSPACE according to your order.
[2] For the all-in resistance of the system you must add the modul's Ri to the Power Unit's output resistance.
[3] The voltage for putting the module into operation is applied on the Power Unit's power supply inputs UBAT1 (rail 1) and UBAT2 (rail 2). For further information, refer to Calculating the Maximum Permissible Rail Supply Voltage on page 125.
[4] Typical value at T_Housing = +25 °C (+77 °F) unless otherwise stated.

RP_HC_CAB1 power/load cable dSPACE provides a RP_HC_CAB1 power/load cable to connect a RapidPro Power Unit including PS-HCHBD and/or PS-HCFBD modules to power supply and load. For further information, refer to RP_HC_CAB1 Power/Load Cable on page 573.

PS-HCFBD 1/1 Configuration Template

Objective

You can use the following template as a master to document the settings of your module.

Identification and location

Enter the following parameters to identify and locate the module unambiguously.

Parameter		Specification	Label Location
Identification	dSPACE number	DS1667	Top view 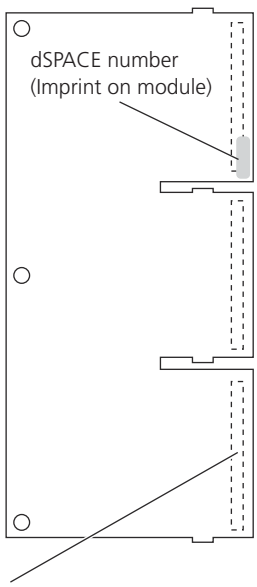
	Serial number		
	Module variant		
Place of installation	System name (unit/stack name)		
	Layer number(s) (unit position in a stack)		
	Slot number (slot on the unit's carrier board)		

Software configuration

Enter the settings for the channel in the table below:

Parameter	CH1
Channel name	
Output voltage	
Operation mode	
CTRL input	
DIR input	

User-configurable circuit

Enter the settings for the channel in the table below:

Parameter	CH1
Channel name	
Maximum output current [1)]	
Low-pass filter frequency (100 Hz … 10000 Hz) [2)]	
X1	
X2	
Output circuit	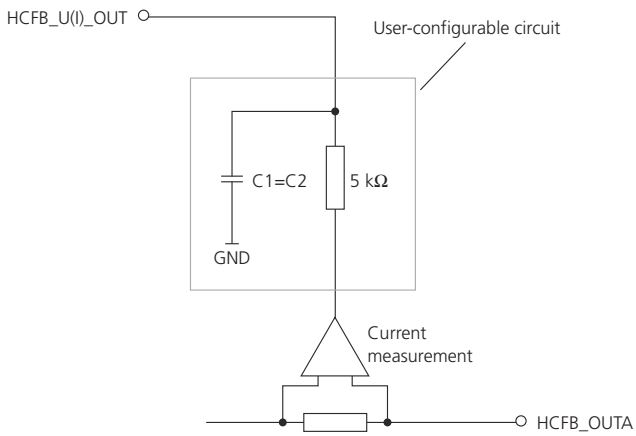

Parameter	CH1
Solder pads	View of underside 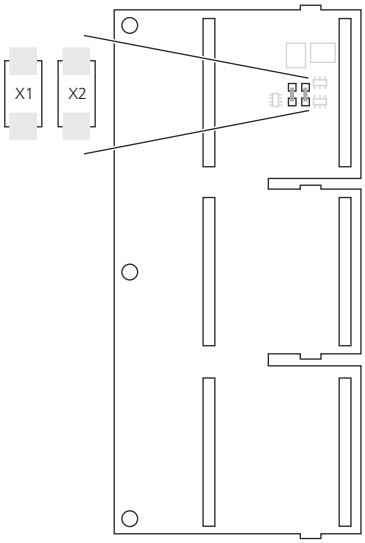
Package type	1206 SMD, ceramic type of X7R

1) Read only parameter in ConfigurationDesk for RapidPro
2) Parameter in ConfigurationDesk for RapidPro

PS-HCHBD 2/1 Module

Short description

The PS-HCHBD 2/1 module (DS1668) is a high-current, half-bridge power stage module with two channels for driving loads in different modes. Each channel provides a control input and can drive one load connected at the output in:

- Half-bridge mode
- High-side driver mode
- Low-side driver mode

Where to go from here

Information in this section

Module Overview....482
Information on the module's features, components, and functionality will help you assess its possible uses.

Software Configuration....486
The PS-HCHBD 2/1 module provides parameters which are software-configurable via ConfigurationDesk for RapidPro.

Hardware Configuration....488
The PS-HCHBD 2/1 module provides user-configurable circuits to add electronic components (i.e., capacitors) to the output circuits of the module.

Connection to Loads....493
You can use the PS-HCHBD 2/1 module to drive loads connected to GND or loads connected to UBAT. Dependent on the application, you have to connect the outputs in different ways.

Module in Use....496
You have access to information (i.e., temperatures on the circuit board) which the module provides during operation.

Data Sheet....500
The data sheet summarizes the technical data of the PS-HCHBD 2/1 module; there is also a template that you can use as a master to document your configuration settings.

Module Overview

Where to go from here

Information in this section

Module Features.....482
Module Components and Functionality.....483

Module Features

Main features

The main features of the PS-HCHBD 2/1 module are:

- Two channels for driving loads
- Outputs can be used as:
  - half-bridge
  - high-side driver
  - low-side driver

  (software-configurable)
- Output current:
  - Max. 30 A
- Chopper current limitation of the output current for each channel, for example, to reduce power dissipation, if a DC motor seizes.
- Current measurement device with passive low-pass filter on each channel (hardware-configurable)
- Diagnostic functions
- Protection against overcurrent, overtemperature
- Operating voltage: 6 … 20 V

Software

ConfigurationDesk 1.1 (on dSPACE Release 5.0) or later is required to work with the PS-HCHBD 2/1 module.

More features

For a complete list of the module's features, refer to PS-HCHBD 2/1 Data Sheet on page 500.

Module Components and Functionality

Objective

The module's components are shown on the basis of its simplified I/O circuit. More detailed descriptions of the components are given if their functions are not clear from the I/O circuit.

I/O circuit

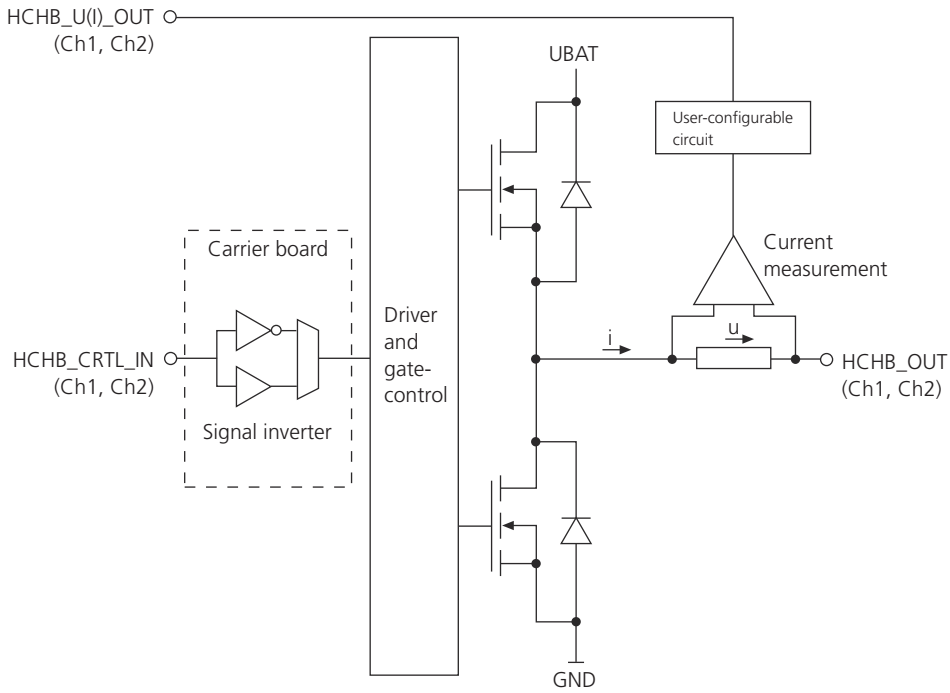

Operating mode software-configurable

You can select the module's operating mode via ConfigurationDesk for RapidPro for each channel:

Setting	Description
Half-bridge	In half-bridge operating mode the input signal switches the connected load from UBAT to GND and vice versa.
Low-side	In low-side operating mode you can drive a load that is connected to UBAT.
High-side	In high-side operating mode you can drive a load that is connected to GND.

For further information, refer to Configuration via ConfigurationDesk for RapidPro on page 486

Signal inverter

The logic level of the control inputs can be inverted by signal inverters, which are integrated on the unit's carrier board. You can configure the signal polarity via ConfigurationDesk for RapidPro. For details, refer to Software-configurable parameters on page 486.

Current measurement

Each channel includes a current measurement device with configurable low-pass filter. The load current is measured via a shunt resistor. The current measurement signals are available at output pins (HCHB_U(I1)_OUT and HCHB_U(I2)_OUT). They can be used as analog current feedback for closed-loop applications.

Note

The behavior of the load current and therefore the behavior of the corresponding current measurement signal strongly depends on the kind of load and the respective control signal. The following table is based on the behavior of resistive loads. It shows the dependencies between the control inputs and the polarity of the current measurement signal.
A load current flowing in the direction shown by the arrow in the illustration above results in a negative current measurement signal in relation to zero scale.

Driver Usage	HCHB_CTRL_IN	HCHB_OUT	Polarity of Current Measurement Signal
Half-bridge driver	0 [1]	Low	+ [2]
	1 [3]	High	– [2]
Low-side driver	1	High-impedance	no current
	0	Low	+
High-side driver	0	High-impedance	no current
	1	High	–

[1] 0 = logic low level
[2] + means: positive signal in relation to zero scale. – means: negative signal in relation to zero scale. Zero scale: 0 V for voltage range –5 V … +5 V and 2.5 V for voltage range 0 … +5 V
[3] 1 = logic high level

Tip

To scale the output of the current measurement, refer to Scaling the Output Voltages of the Current Measurement Device on page 498.

User-configurable circuit

The current measurement devices of each channel provide a first-order low-pass filter. You can change the cutoff frequency of the current measurement devices.

For further information on the user-configurable circuit, refer to Overview of User-Configurable Circuit on page 488.

Chopper current limitation

An integrated chopper current limitation limits the output current of each channel, for example, to reduce power dissipation, if a DC motor seizes.

As soon as the current limit is reached, the low-side switches off for a fixed time (= chopper off-time). The illustration below shows the time characteristic of the output current if an inductive load is connected.

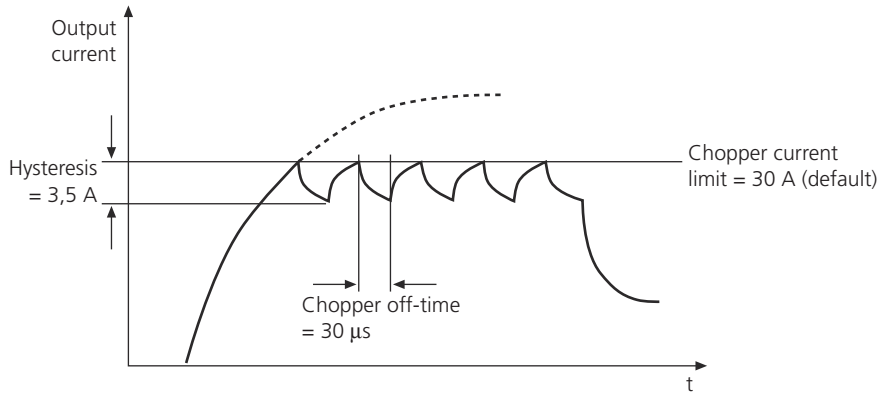

Restriction of the Power Unit's maximum operating voltage

The maximum possible operating voltage of the Power Unit is restricted to +20 V, if a PS-HCHBD 2/1 module is installed.

The voltage for putting the module into operation is applied on the Power Unit's power supply inputs UBAT1 (rail 1) and UBAT2 (rail 2). If this voltage is higher than 20 V, the channels of the module which is supplied by the affected rail are deactivated.

Software Configuration

Configuration via ConfigurationDesk for RapidPro

Objective

Various parameters of the module are configurable via ConfigurationDesk for RapidPro. In addition, the software provides module-specific edit fields to document the values of the soldered components of the user-configurable circuit. This information on the hardware is stored on the module.

Software-configurable parameters

Parameter	Range/Setting	Factory Default Setting	Description	Valid
Output voltage range	▪ 0 … +5 V ▪ –5 V … +5 V	0 … +5 V	*Installed in an Power Unit that is used as single unit:* The output voltage configuration allows you to adapt the analog outputs to different types of dSPACE I/O boards.	All channels
			Installed in a Power Unit in a stack with unit connection bus (UCB): The output voltage is fixed at 0 … +5 V.	
Signal polarity	▪ Non-inverted ▪ Inverted	Non-inverted	You can set the input signal polarity of the HCHB_CTRL_IN pin.	Per channel
Output driver mode	▪ Half-bridge ▪ Low-side ▪ High-side	Half-bridge	Defines the output driver mode for each channel.	

Hardware information

You can enter information about the user-configurable circuit on the module-specific properties dialog. The information is stored on the module as reminders and does not affect the channel's behavior.

The following table shows the relation between the parameter names used in ConfigurationDesk for RapidPro and the names of the components used in the user-configurable circuit:

Parameter in ConfigurationDesk for RapidPro	Component in the Output Circuit	Description	Valid
Low-pass filter frequency (100 Hz … 10000 Hz)	X1, X2	You can edit the value of the cut-off frequency of the current measurement filter (in Hz).	Per channel

If the components were soldered by dSPACE according to your order, the specific values are already stored.

For a detailed circuit illustration, refer to Overview of User-Configurable Circuit on page 488.

Related topics

References

PS-HCHBD 2/1 Configuration Template..... 502

Hardware Configuration

Objective

Additional electronic components can be added to each channel to adapt it to the specifics of your application. The module provides solder pads where you can solder components like capacitors in user-configurable circuits.

Where to go from here

Information in this section

Overview of User-Configurable Circuit.....488
Solder Pads and Component Requirements.....489
Configuration Example: Configuring the Low-Pass Filter for Current Measurement.....490

Overview of User-Configurable Circuit

Objective

You can change the capacitors of the low-pass filter of a channel's current measurement device to adjust it to a specific filter frequency.

Components of the user-configurable circuit

The following illustration shows the user-configurable circuit of the PS-HCHBD 2/1 module.

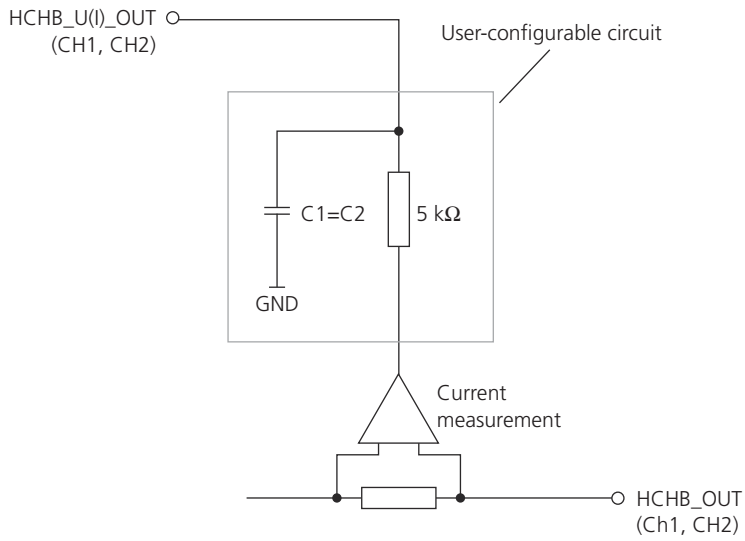

Factory default settings

The settings depend on your order as follows:

- If you did not specify components in your order, the user-configurable circuit of each channel is equipped with:
  - X1 = 4.7 nF
  - X2 = 4.7 nF

  This results in a filter frequency of 6.7 kHz. For details, refer to Configuration Example: Configuring the Low-Pass Filter for Current Measurement on page 490.
- If you specified components in your order, they were soldered by dSPACE.

Hardware information in ConfigurationDesk for RapidPro

ConfigurationDesk for RapidPro provides a module-specific properties dialog where you can edit the values of the soldered components as reminders for each channel on the module.

For the relevant parameters, refer to Hardware information on page 486.

Related topics

Basics

Changing the Hardware Configuration of SC/PS Modules (RapidPro System Hardware Installation Guide 🕮)
Changing the Installation of SC/PS/COM Modules (RapidPro System Hardware Installation Guide 🕮)

Solder Pads and Component Requirements

Objective

The PS-HCHBD 2/1 module provides solder pads to add components on the module's circuit board.

Positions of solder pads

The following illustration shows the underside of the PS-HCHBD 2/1 module. It shows the positions of the solder pads for the user-configurable circuits for each channel.

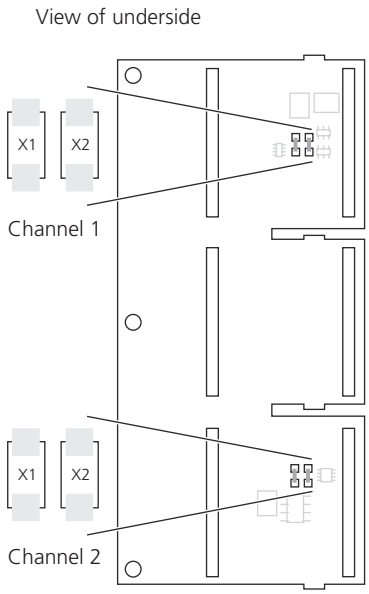

Component requirements

The circuit board is designed for soldering standard 1206 size SMDs (surface mounted devices). The capacitors must be a ceramic type of X7R.

Related topics

Basics

Changing the Hardware Configuration of SC/PS Modules (RapidPro System Hardware Installation Guide 🕮)
Changing the Installation of SC/PS/COM Modules (RapidPro System Hardware Installation Guide 🕮)

Configuration Example: Configuring the Low-Pass Filter for Current Measurement

Objective

To use the current measurement as an analog current feedback, you can equip the current measurement channel with a first-order low-pass filter. You can configure the –3 dB cutoff frequency for each filter by soldering capacitors.

Calculating the cutoff frequency

The cut-off frequency fg of the low-pass filters is easy to calculate with the formula below. Here it is shown for the HCHB_U(I1)_OUT channel 1 circuit:

$$fg_{HCHB_U(I1)_OUT} = \frac{1}{2 \times \pi \times 5\,k\Omega \times C}$$

with C = C1 = C2

Note

It is strictly recommended to use capacitors which are identical in construction and value.

Assignment of the components

The illustration below shows the components:

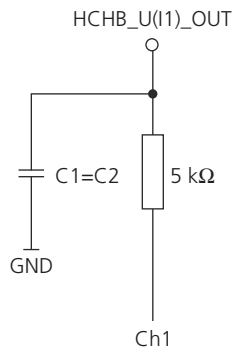

Note

The circuit above is simplified. The capacitors are not actually parallel.

Example values

The following table shows standardized component values for different cutoff frequencies:

Cut-off Frequency fg	Resistor R	Capacitor X1	Capacitor X2
9.6 kHz	5 kΩ	3.3 nF	3.3 nF
6.7 kHz		4.7 nF	4.7 nF
4.7 kHz		6.8 nF	6.8 nF
3.2 kHz		10 nF	10 nF
2.1 kHz		15 nF	15 nF
1.4 kHz		22 nF	22 nF
1 kHz		33 nF	33 nF
700 Hz		47 nF	47 nF
500 Hz		68 nF	68 nF

Note

The value of the resistor R cannot be changed.

Related topics

Basics

Changing the Hardware Configuration of SC/PS Modules (RapidPro System Hardware Installation Guide 🕮)
Changing the Installation of SC/PS/COM Modules (RapidPro System Hardware Installation Guide 🕮)

Connection to Loads

Objective

You can use the PS-HCHBD 2/1 module to drive loads which are connected to GND, or to UBAT. Dependent on the application, you have to connect the outputs differently.

Where to go from here

Information in this section

Driving Loads Connected to GND.....493
Driving Loads Connected to UBAT.....494

Driving Loads Connected to GND

Usage as high-side driver

If you want to drive loads that are connected to GND, like valves, relays, heating elements, etc., you can use the PS-HCHBD 2/1 module as a high-side driver. To do this, connect the load to HCHB_OUT pins and GND.

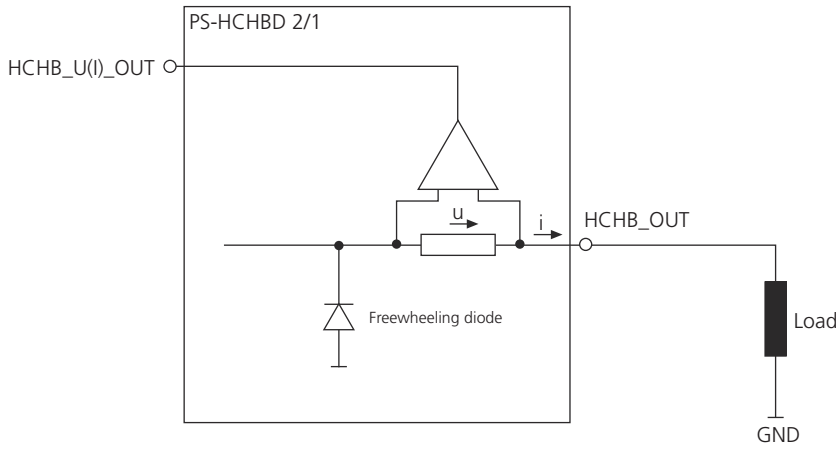

Connecting output pins

The HCHB_OUT output of each channel is available at 12 pins of one of the Power Unit's front connectors.

Note

- Connect all the output pins to the load to get the maximum output current.
- Star point connection is recommended for connecting the pins to the load. The star point must be located as close as possible to the outside of the matching Sub-D connector that is connected to the Power Unit.

For basic information on proper cabling, such as aspects of grounding, shielding, and wiring up external devices, refer to Proper Cabling (RapidPro System Hardware Installation Guide 🕮).

Related topics

References

Driving Loads Connected to UBAT 494

Driving Loads Connected to UBAT

Usage as low-side driver

If you want to drive loads that are connected to UBAT, like valves, relays, heating elements, etc., you can use the PS-HCHBD 2/1 module as a low-side driver. To do this, connect the load to UBAT and HCHB_OUT pins.

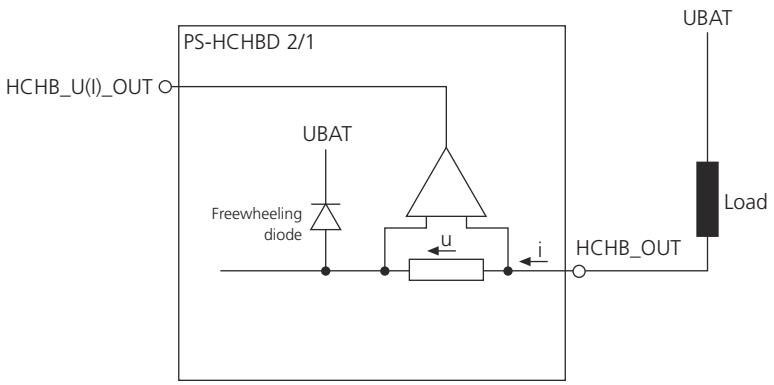

Load dump protection

Although the carrier board of the Power Unit is equipped with load dump protection, the power outputs are not protected in this way. They are protected only indirectly via the load resistances of the connected loads.

⚠ WARNING

Load dump and/or static overvoltage on the PS-HCHBD 2/1 module's power outputs damages the Power Unit.

To avoid damage to the Power Unit:

- Take suitable measures against load dump and/or static overvoltage on the part of the load.
- Use the PS-HCHBD 2/1 module's low-side driver mode only if load dump and/or static overvoltage cannot occur in your application.

Connecting output pins

The HCHB_OUT output of each channel is available at 12 pins of one of the Power Unit's front connectors.

Note

- Connect all the output pins to the load to get the maximum output current.
- Star point connection is recommended for connecting the pins to the load. The star point must be located as close as possible to the outside of the matching Sub-D connector that is connected to the Power Unit.

For basic information on proper cabling, such as aspects of grounding, shielding, and wiring up external devices, refer to Proper Cabling (RapidPro System Hardware Installation Guide 🕮).

Related topics

References

Driving Loads Connected to GND 493

Module in Use

Objective

During operation you can access status information of the PS-HCHBD 2/1 module via ConfigurationDesk for RapidPro. The module provides:

- Continuous monitoring of the module's temperature
- Diagnostic messages about the status of the module and the status of the connection to external devices

Where to go from here

Information in this section

Monitoring.....496
Diagnostics.....497
Scaling the Output Voltages of the Current Measurement Device.....498
Measuring RMS Values.....499

Monitoring

Objective

The PS-HCHBD 2/1 module provides sensors to monitor hardware specifics, such as temperatures on the module's circuit board. You can access this information via ConfigurationDesk for RapidPro.

Monitored parameters

The PS-HCHBD 2/1 provides monitoring of the following parameters:

Parameter	Description	Valid
Temperature sensor T1	The temperature is measured in two positions on the module's circuit board. The monitored temperatures serve for troubleshooting purposes.	Channel 1
Temperature sensor T2		Channel 2

Positions of temperature sensors

The following illustration shows the topside of the PS-HCHBD 2/1 module, with the positions of the temperature sensors.

Top view

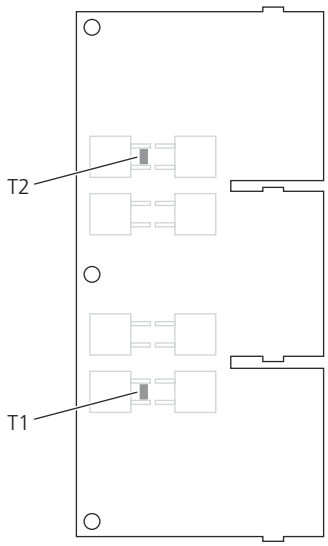

Diagnostics

Diagnostic warnings and diagnostic errors

The diagnostic messages can be divided into warnings and errors.

- Diagnostic warnings occur if a fault is detected. Each warning is dropped as soon as the reason for it is removed.
- Diagnostic errors cause the module functions to be disabled (shutdown). If a diagnostic error occurs, you have to remove the source of the error and reset the module's diagnostics via ConfigurationDesk for RapidPro.

Note

Depending on where a PS-HCHBD 2/1 module is inserted (rail 1 – slots 1 … 3, or rail 2 – slots 4 … 6), the corresponding front I/O connector of the Power Unit must be connected to the power supply. Otherwise you get unpredictable diagnostic messages.

Precondition to get diagnostic messages

ConfigurationDesk for RapidPro can receive diagnostic messages about channels sent by the RapidPro modules only if the RapidPro system is in execution mode. For further information, refer to Basics on the Display of Diagnostic Messages (ConfigurationDesk for RapidPro - Guide 🕮).

Possible diagnostic messages

The PS-HCHBD 2/1 module provides the following diagnostic messages via ConfigurationDesk for RapidPro:

Diagnostic Message		Description	Valid
Warning	Overcurrent	The output current is limited to 30 A (default setting, unless changed according to your order). If this limit is exceeded the message "Overcurrent" is displayed. The module functions as a current limiter. For details, refer to Chopper current limitation on page 485.	Per channel
	Overheat	The temperature of the affected channel has reached a critical value of approx. 105 °C (221 °F) and the outputs are deactivated. If the temperature falls below 100 °C (212 °F) the outputs are reactivated.	All channels
Error	–	The PS-HCHBD 2/1 module does not provide diagnostic errors.	–

Scaling the Output Voltages of the Current Measurement Device

Objective

The module's current measurement device provides voltages as measurement result. You need to scale these voltages to get the current values.

Formulas to scale the voltages on the rear I/O connectors

The values of the scaling formula and the formula itself depend on the settings of the module. The gain value is a result of the settings Output Voltage Range and Current Measurement Range. You can use the following formulas to scale the voltages on the specific rear connector pins of a Power Unit used as single unit.

Output Voltage Range	Current Measurement Range	Gain	Scaling Formula
0 … 5 V	± 30 A	12 A/V	$I_{HCHB_U(I)_OUT}$ = 12 A/V x HCHB_U(I)_OUT – 30 A
– 5 V … + 5 V [1]		6 A/V	$I_{HCHB_U(I)_OUT}$ = 6 A/V x HCHB_U(I)_OUT

[1] Only adjustable if the module is installed in a Power Unit that is used as single unit.

Formula for the RPCU_ADC_BLx block

If the PS-HCHBD 1/1 module is installed in a Power Unit that is used in a RapidPro stack with UCB, the current measurement output is represented by the output of the RPCU_ADC_BLx block of the RTI RapidPro Control Unit Blockset. You can use the following formulas to get the current values.

Output Voltage Range	Current Measurement Range	Scaling Formula
0 … 5 V	± 30 A	$I_{MUX_ADC_out}$ = 60 A x MUX_ADC_out – 30 A

For further information, refer to Basics on A/D Conversion (RapidPro System – I/O Subsystem MPC565 Implementation Features 🕮).

Related topics

References

PS-HCHBD 2/1 Data Sheet 500
RPCU_ADC_BLx (RapidPro System – I/O Subsystem MPC565 RTI Reference 🕮)

Measuring RMS Values

Objective

When measuring RMS (root mean square) values note that many multimeter only cover the AC part of the signal, even if they measure in *true-RMS mode*.

Avoiding measuring errors

You can calculate the RMS value with the following formula:

$$I_{RMS} = \sqrt{(I_{DC})^2 + (I_{AC})^2}$$

- I_{DC} = measured across shunt with multimeter in DC operation mode
- I_{AC} = measured across shunt with multimeter in true-RMS mode

Related topics

References

PS-HCHBD 2/1 Data Sheet 500

Data Sheet

Where to go from here

Information in this section

PS-HCHBD 2/1 Data Sheet..... 500
This gives you a complete overview of the module's technical data.

PS-HCHBD 2/1 Configuration Template..... 502
You can copy and/or print out the template and use it as a master to document your configuration settings.

PS-HCHBD 2/1 Data Sheet

Technical data

Parameter	Specification
Identification	Top view 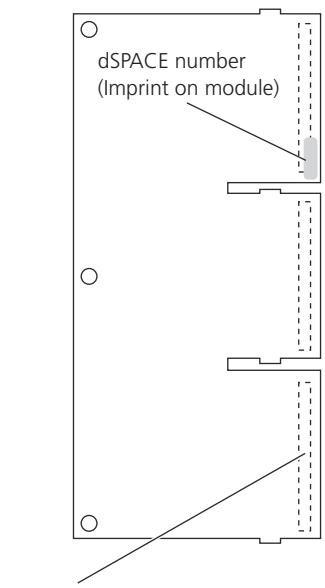 dSPACE number: DS1667 [1)]
Channels	2 independent high-current power stage channels. Each channel can be used as: ▪ Half-bridge driver output ▪ High-side driver output

Parameter		Specification
		▪ Low-side driver output
Software		ConfigurationDesk 1.1 (on dSPACE Release 5.0) or later is required
Diagnostics		Overcurrent, overheat
Output current [2]	Max. value	$T_{Housing}$ = +60 °C (+140 °F) ▪ Only one channel active: ▪ 30 A_{RMS} continuous [3] For information on avoiding measurement errors, refer to Measuring RMS Values on page 499. ▪ Both channels active: ▪ 19 A_{RMS} continuous per channel [3] For information on avoiding measurement errors, refer to Measuring RMS Values on page 499. 30 A peak per channel for 1 second
	Current limitation	30 A per channel
	Hysteresis	3.5 A
	Chopper-off time	30 µs
Output resistance Ri		≈ 3.5 mΩ [4]
Operating voltage [5]		6 … 20 V
Input signal polarity		Inverted, non-inverted (software-configurable)
Switching time	High side rise time	20 ns
	High side fall time	130 ns
	Low side rise time	20 ns
	Low side fall time	130 ns
Delay time	High side "ON"	310 ns
	High side "OFF"	400 ns
	Low side "ON"	310 ns
	Low side "OFF"	400 ns
Dead time		500 ns
Current measurement device	Voltage output range	0 … +5 V, –5 V … +5 V (software-configurable)
	Absolute measurement error [6]	1% ±300 mA
	Filter	1st order low-pass filter (hardware-configurable)
Isolation		Level shifter: to eliminate ground potential differences between dSPACE RCP system (like MicroAutoBox) and the RapidPro Power Unit
Protection		▪ Overcurrent ▪ Overheat

Parameter	Specification
Physical size (length x width)	▪ 60 x 129 mm (2.36 x 5.08 in.) ▪ Requires three slots (rail 1 or rail 2 of the Power Unit)

1) The PS-HCHBD 2/1 (DS1668) and the PS-HCFBD 1/1 (DS1667) have identical circuit boards, but different mounted components.
2) The items represent the default settings, if the module is not changed by dSPACE according to your order.
3) Depending on the actual current waveform the current limitation is triggered already at lower values.
4) For the all-in resistance of the system you must add the modul's Ri to the Power Unit's output resistance.
5) The voltage for putting the module into operation is applied on the Power Unit's power supply inputs UBAT1 (rail 1) and UBAT2 (rail 2). For further information, refer to Calculating the Maximum Permissible Rail Supply Voltage on page 125.
6) Typical value at T_Housing = +25 °C (+77 °F) unless otherwise stated.

RP_HC_CAB1 power/load cable dSPACE provides a RP_HC_CAB1 power/load cable to connect a RapidPro Power Unit including PS-HCHBD and/or PS-HCFBD modules to power supply and load. For further information, refer to RP_HC_CAB1 Power/Load Cable on page 573.

PS-HCHBD 2/1 Configuration Template

Objective

You can use the following template as a master to document the settings of your module.

Identification and location

Enter the following parameters to identify and locate the module unambiguously.

Parameter		Specification	Label Location
Identification	dSPACE number	DS1667 [1]	Top view 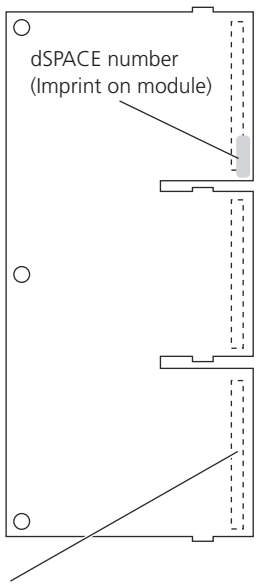
	Serial number		
	Module variant		
Place of installation	System name (unit/stack name)		
	Layer number(s) (unit position in a stack)		
	Slot number (slot on the unit's carrier board)		

[1] The PS-HCHBD 2/1 (DS1668) and the PS-HCFBD 1/1 (DS1667) have identical circuit boards, but different mounted components.

Software configuration

Enter the settings for each channel in the table below:

Parameter	CH1	CH2
Channel name		
Output voltage		
Output driver mode		
Signal polarity		

User-configurable circuit

Enter the settings for each channel in the table below:

Parameter	CH1	CH2
Channel name		
Maximum output current [1]		
Low-pass filter frequency (100 Hz … 10000 Hz) [2]		
X1		
X2		
Output circuit	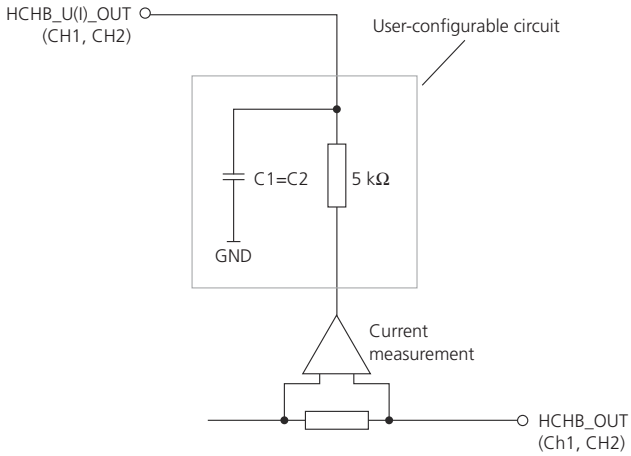	
Solder pads	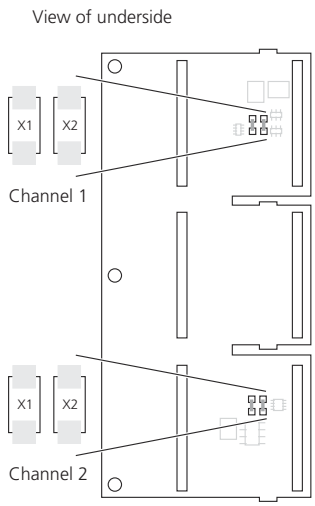	
Package type	1206 SMD, ceramic type of X7R	

[1] Read only parameter in ConfigurationDesk for RapidPro
[2] Parameter in ConfigurationDesk for RapidPro

PS-HCFBD 1/2 Module

Short description

The PS-HCFBD 1/2 module (DS1767) is a high-current, full-bridge power stage module with one channel for driving bidirectional loads such as DC motors (12 V or 24 V).

It provides two control inputs and can drive one load connected at the two outputs.

Where to go from here

Information in this section

Module Overview.....506
Information on the module's features, components, and functionality will help you assess its possible uses.

Software Configuration.....512
The PS-HCFBD 1/2 module provides parameters which are software-configurable via ConfigurationDesk for RapidPro.

Connection to Loads.....514
You can use the PS-HCFBD 1/2 module as a full-bridge driver and you have to note a few points connecting loads.

Module in Use.....515
You have access to information (i.e., temperatures on the circuit board) which the module provides during operation.

Data Sheet.....519
The data sheet summarizes the technical data of the PS-HCFBD 1/2 module; there is also a template that you can use as a master to document your configuration settings.

Module Overview

Where to go from here

Information in this section

Module Features.....506
Module Components and Functionality.....507

Module Features

Main features

The main features of the PS-HCFBD 1/2 module are:

- One full-bridge driver output for driving loads
- Output current:
  - Max. 60 A for one second
  - 42 A_{RMS} continuous (depends on the housing temperature of the unit/stack)
- Chopper current limitation of the output current, for example, to reduce power dissipation, if a DC motor seizes.
- Current measurement device with low-pass filter (software-configurable)
- Voltage measurement to monitor UBAT and the voltages in the output branches
- Diagnostic functions
- Protection against overcurrent and overtemperature
- Operating voltage: 6 … 30 V (to drive loads in 12 V or 24 V power supply systems)

Software

Following software is required to work with the PS-HCFBD 1/2 module:

- ConfigurationDesk 3.0 (on dSPACE Release 6.3) with plug-in software
- ConfigurationDesk 3.0.1 (on dSPACE Release 6.4) with plug-in software
- All later ConfigurationDesk for RapidPro versions support the PS-HCFBD 1/2 module without additional software components.

More features

For a complete list of the module's features, refer to PS-HCFBD 1/2 Data Sheet on page 519.

Related topics

References

Module Components and Functionality.....507

Module Components and Functionality

Objective

The module's components are shown on the basis of its simplified I/O circuit. More detailed descriptions of the components are given if their functions are not clear from the I/O circuit.

I/O circuit

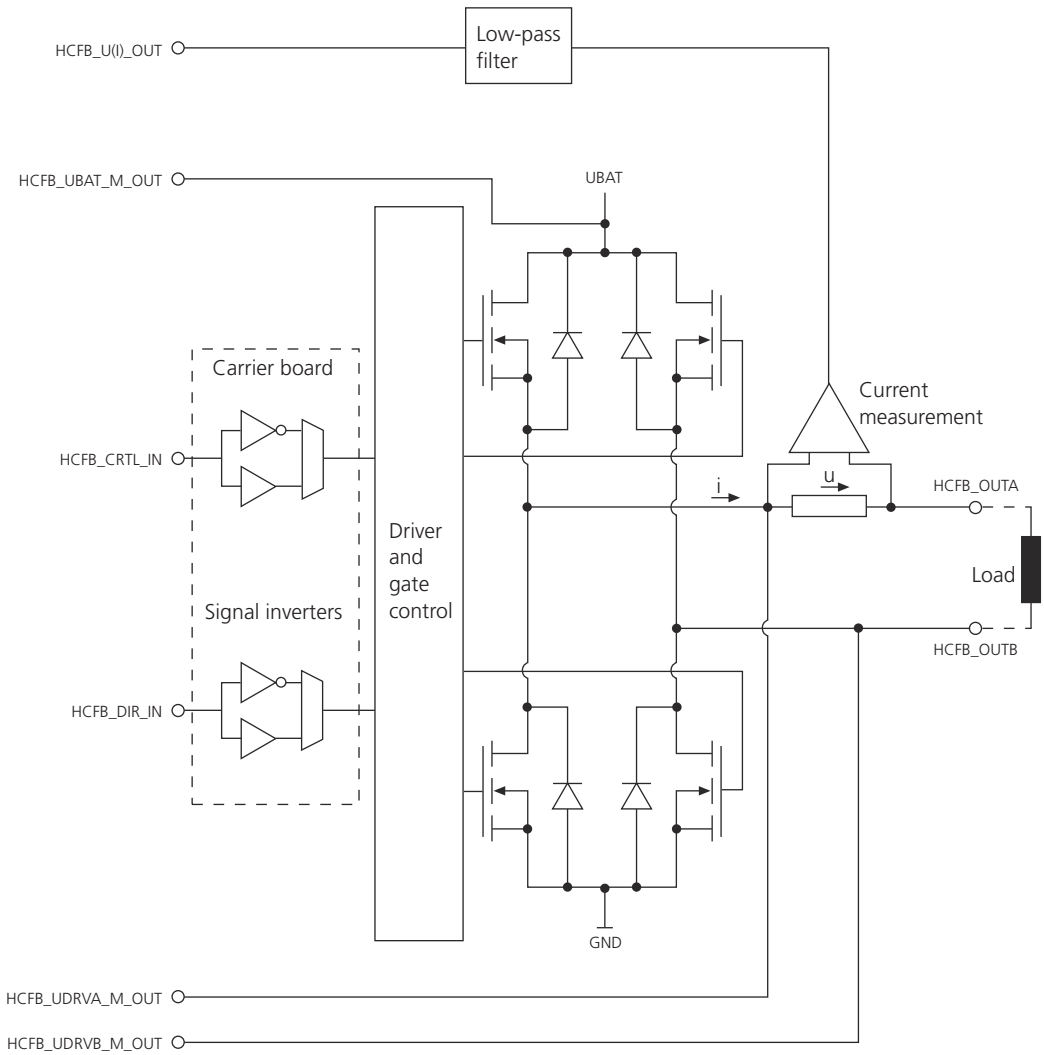

Control inputs (CTRL and DIR)

The power stages are controlled by the inputs HCFB_DIR_IN and HCFB_CTRL_IN. The DIR input determines the direction of the output current, while the CRTL input controls whether the current is increased (= "1") or decreased (= "0").

Signal inverter

The logic level of the control inputs can be inverted by a signal inverter, which is integrated on the unit's carrier board. You can configure the signal polarity via ConfigurationDesk for RapidPro. For details, refer to Software-configurable parameters on page 512.

Current measurement

The load current is measured via a shunt resistor. The current measurement signal is available at an output pin (HCFB_U(I)_OUT). You can use it as an analog current feedback for closed-loop applications.

Note

The behavior of the load current and therefore the behavior of the corresponding current measurement signal strongly depends on the kind of load and the control signal. The following table is based on the behavior of resistive loads. It shows the dependencies between the control inputs and the polarity of the current measurement signal.

A load current flowing in the direction shown by the arrow in the illustration above results in a negative current measurement signal in relation to zero scale.

Operating Mode	Control Inputs		HCFB_ OUTA	HCFB_ OUTB	Polarity of Current Measurement Signal
	HCFB_DIR_IN	HCFB_CTRL_IN			
Slow decay [1]	0 [2]	0	High	High	Freewheel [3]
	1 [4]	0	High	High	Freewheel
	0	1	High	Low	– [5]
	1	1	Low	High	+ [5]
Fast decay [6]	0	0	Low	High	+
	1	0	High	Low	–
	0	1	High	Low	–
	1	1	Low	High	+

[1] The supply voltage (UBAT) and a short circuit is generated alternately for the load.
[2] 0 = logic low level
[3] Freewheel means that the direction of the load current depends on the previous direction. With inductive loads the direction of the current does not change, but the value decreases until the state of the control signal changes. With resistive loads, the value of the load current decreases to zero.
[4] 1 = logic high level
[5] + means: positive signal in relation to zero scale. – means: negative signal in relation to zero scale. Zero scale: 0 V for voltage range –5 V … +5 V and 2.5 V for voltage range 0 … +5 V
[6] An alternating voltage is generated for the load.

Tip

To scale the output of the current measurement, refer to Scaling the Output Voltages of the Current Measurement Device on page 473.

Low-pass filter The current measurement device of the channel provides a low-pass filter. The filter consists of a hardware component and a configurable software component (digital low-pass filter) as shown in the illustration below.

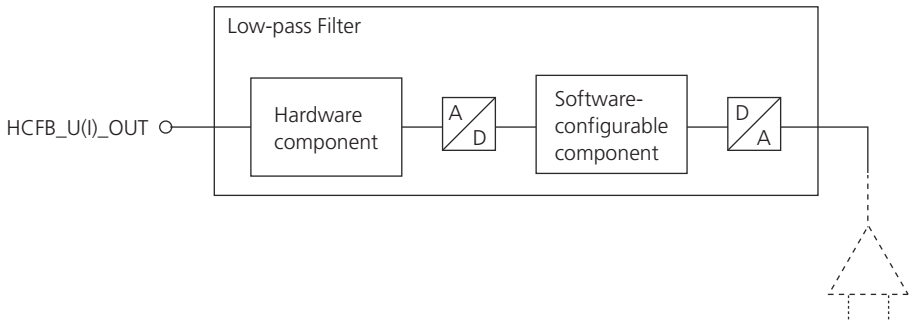

The integrated A/D - D/A conversion results in an improved common mode immunity in conjunction with a high measurement bandwidth.

Note

The interaction of the filter's hardware and software component provides the best possible filter characteristics but can restrict the maximum possible bandwidth.

You can deactivate the software component of the filter via ConfigurationDesk for RapidPro to use the maximum possible bandwidth (see *Enable digital low-pass filter*, Software-configurable parameters on page 512).

Voltage measurement

You can monitor the output voltages of the PS-HCFBD 1/2 module with different output signals:

- HCFB_UBAT_M_OUT

  Output signal to monitor the internal voltage of the unit's rail the module is installed on. So, you can improve the controller dynamics of engine controls.
- HCFB_UDRVA_M_OUT / HCFB_UDRVB_M_OUT

  Output signals to monitor the output voltage of each half-bridge. The difference of both signal results to the voltage over the load. An adequate external low-pass filter is recommended.

Switching status of the power stages

The table below gives an overview of the switching status of the power stages:

Setting	Switching Status of the Power Stages
Slow decay	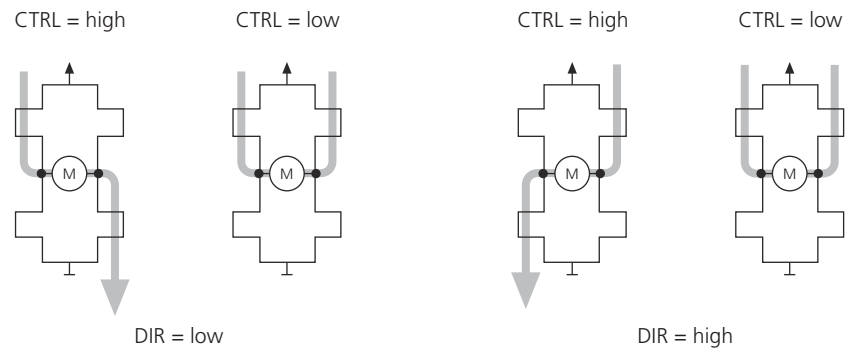
Fast decay	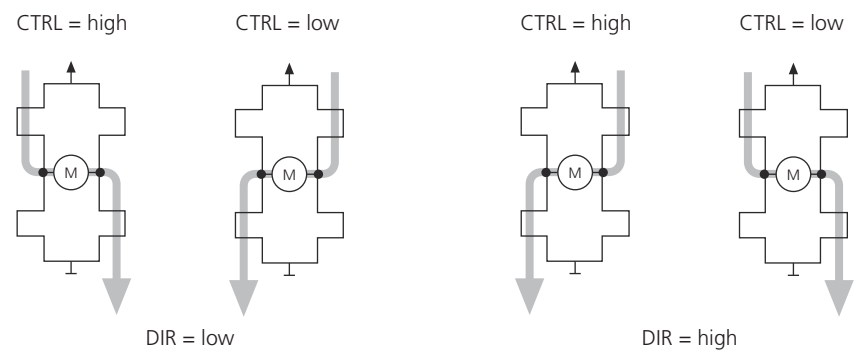

Chopper current limitation

An integrated chopper current limitation limits the output current, for example, to reduce power dissipation if a DC motor seizes.

As soon as the current limit is reached, the output driver switches off for a fixed time (= chopper off-time). The illustration below shows the time characteristic of the output current if an inductive load is connected.

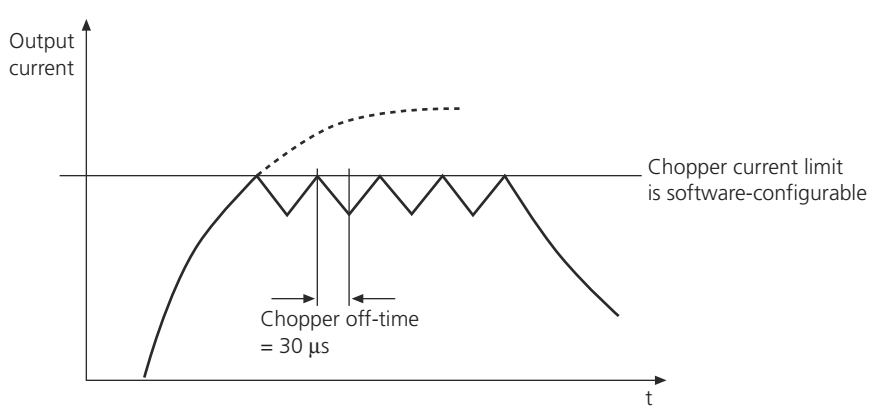

Restriction of the Power Unit's maximum operating voltage

The maximum possible operating voltage of the Power Unit is restricted to +30 V, if a PS-HCFBD 1/2 module is installed.

The voltage for putting the module into operation is applied on the Power Unit's power supply inputs UBAT1 (rail 1) and UBAT2 (rail 2). If this voltage is higher than 30 V, the channel of the module which is supplied by the affected rail are deactivated.

Connecting the Power Unit to the host PC

You must use the USB_CAB12 PC Connection Cable for Calibration Hub/RapidPro on page 584 to connect the Power Unit with installed PS-HCFBD 1/2 module to the host PC for a proper data connection.

Related topics

References

Configuration via ConfigurationDesk for RapidPro..... 512
Module Features..... 506

Software Configuration

Configuration via ConfigurationDesk for RapidPro

Objective

Various parameters of the module are configurable via ConfigurationDesk for RapidPro.

Software-configurable parameters

Parameter	Range/Setting	Factory Default Setting	Description
Operating mode	▪ Slow decay ▪ Fast decay	Slow decay	▪ Slow decay: The module's outputs (HCFB_OUTA/HCFB_OUTB) can have different states depending on the input signals. The load is alternately connected between UBAT and GND or is connected with both pins to UBAT. For an illustration, refer to Switching status of the power stages on page 510. ▪ Fast decay: An alternating voltage is generated for the load.
Current limit (5.0 A ... 60.0 A)	5.0 A ... 60.0 A	60 A	You can set the maximum possible output current to adapt it to the specifications of your connected load.
CTRL input signal polarity	▪ Non-inverted ▪ Inverted	Non-inverted	You can set the input signal polarity of the HCFB_CTRL_IN pin.
DIR input signal polarity	▪ Non-inverted ▪ Inverted	Non-inverted	You can set the input signal polarity of the HCFB_DIR_IN pin.
Output voltage range	▪ 0 … +5 V ▪ –5 V … +5 V	0 … +5 V	*Installed in a Power Unit that is used as single unit:* The output voltage configuration allows you to adapt the analog

Parameter	Range/Setting	Factory Default Setting	Description
			outputs to different types of dSPACE I/O boards.
			Installed in a Power Unit in a stack with unit connection bus (UCB): The output voltage is fixed at 0 … +5 V.
Enable digital low-pass filter	▪ True ▪ False	True	The interaction of the filter's hardware and software component provides the best possible filter characteristics but can restrict the maximum possible bandwidth. So, you can disable the software component of the filter to use the maximum possible bandwidth of the filter.
Digital low-pass filter frequency (100 Hz … 150000 Hz)	100 Hz … 150000 Hz	6500 Hz	You can set the cutoff frequency of the digital low-pass filter that is part of the module's current measurement branch.
Digital low-pass filter order	▪ 1st order ▪ 2nd order	1st order	You can set the order of the digital low-pass filter that is part of the module's current measurement branch.

⚠ WARNING

Choosing the fast-decay mode can cause uncontrolled movements and/or material damage of connected devices.

In fast-decay mode, both input signals (HCFB_DIR_IN and HCFB_CTRL_IN) are set to low level if you build a Simulink model without connecting PWM signals to the full-bridge. This means that a connected motor starts if you download your application and no PWM signals are connected to the module inputs. If you invert the polarity of the signals via ConfigurationDesk for RapidPro, high-level signals trigger the described behavior.

To avoid risk of injury and material damage:

- When building the Simulink model, think through the effects of the connections you are planning and the settings of the modules.
- Ensure that no one is in the potential danger zone of the device (test bench, etc.) when the changes first take effect.

Related topics

References

PS-HCFBD 1/2 Configuration Template..... 522

Connection to Loads

Objective

You have to use the PS-HCFBD 1/2 module as a full-bridge driver.

Driving Loads

Connection example

The PS-HCFBD 1/2 module is designed for driving loads in full-bridge mode (e.g., in 12 V or 24 V power supply systems). The load must be connected to the HCFB_OUTA pin and the HCFB_OUTB pin as shown in the illustration below.

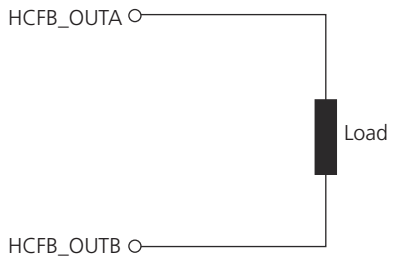

Connecting output pins

The HCFB_OUTA and HCFB_OUTB outputs are each available at 12 pins to spread the maximum output current on the Power Unit's front connectors.

Note

- Connect all the output pins to the load to get the maximum output current.
- Star point connection is recommended for connecting the pins to the load. The star point must be located as close as possible to the outside of the matching Sub-D connector that is connected to the Power Unit.

For basic information on proper cabling, such as aspects of grounding, shielding, and wiring up external devices, refer to Proper Cabling (RapidPro System Hardware Installation Guide 🕮).

Module in Use

Objective

During operation you can access status information of the PS-HCFBD 1/2 module via ConfigurationDesk for RapidPro. The module provides:

- Continuous monitoring of the module's temperature
- Diagnostic messages about the status of the module and the status of the connection to external devices

Where to go from here

Information in this section

Monitoring.....515
Diagnostics.....516
Current Measurement: Scaling the Output Voltages.....517
Measuring RMS Values.....518

Monitoring

Objective

The PS-HCFBD 1/2 module provides to monitor temperatures on the module's circuit board. You can access this information via ConfigurationDesk for RapidPro.

Monitored parameters

The PS-HCFBD 1/2 provides monitoring of the following parameters:

Parameter	Description
Temperature sensor T1, T2	The temperature is measured in two positions on the module's circuit board. The monitored temperatures serve for troubleshooting purposes.

Positions of temperature sensors

The following illustration shows the topside of the PS-HCFBD 1/2 module, with the positions of the temperature sensors. The temperature sensors are located near the output driver stages of each half-bridge.

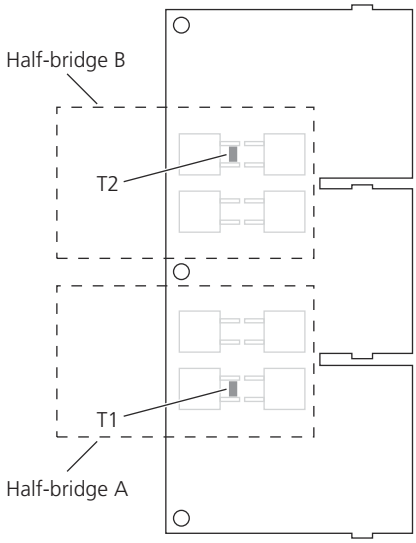

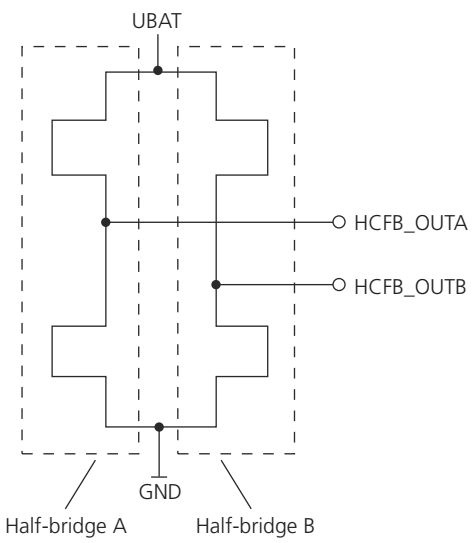

Related topics

References

Diagnostics 516

Diagnostics

Diagnostic warnings and diagnostic errors

The diagnostic messages can be divided into warnings and errors.

- Diagnostic warnings occur if a fault is detected. Each warning is dropped as soon as the reason for it is removed.
- Diagnostic errors cause the module functions to be disabled (shutdown). If a diagnostic error occurs, you have to remove the source of the error and reset the module's diagnostics via ConfigurationDesk for RapidPro.

Note

Depending on where a PS-HCFBD 1/2 module is inserted (rail 1 – slots 1 … 3, or rail 2 – slots 4 … 6), the corresponding front I/O connector of the Power Unit must be connected to the power supply. Otherwise you get unpredictable diagnostic messages.

Possible diagnostic messages

The PS-HCFBD 1/2 module provides the following diagnostic messages via ConfigurationDesk for RapidPro:

Diagnostic Message		Description
Warning	Overcurrent	The output current is limited to 60 A (default setting, can be changed via ConfigurationDesk for RapidPro). If this limit is exceeded, the message "Overcurrent" is displayed. The module functions as a current limiter. For details, refer to Chopper current limitation on page 510.
	Temperature warning	A temperature sensor (T1, T2) has reached a critical value of approx. 100 °C (212 °F).
Error	Current measurement error	The PS-HCFBD 1/2 module provides an internal error detection in the current measurement branch. The module is switched to shutdown mode.
	Overtemperature	At least one of the temperature sensors (T1, T2) has reached a critical value of approx. 105 °C (221 °F) and the outputs are deactivated. The module is switched to shutdown mode.
	Shutdown	This message indicates that the output drivers of the module have been disabled. This can happen, for example, if the ENABLE pin of the single unit is disabled.

Related topics

References

Monitoring..... 515

Current Measurement: Scaling the Output Voltages

Objective

The module's current measurement device provides voltages as measurement result. You need to scale these voltages to get the current values.

Formulas to scale the voltages on the rear I/O connectors

The values of the scaling formula and the formula itself depend on the settings of the module. The gain value is a result of the settings **Output Voltage Range** and **Current Measurement Range**. You can use the following formulas to scale the voltages on the specific rear connector pins of a Power Unit used as single unit.

Output Voltage Range	Current Measurement Range	Gain	Scaling Formula
0 … 5 V	± 60 A	24 A/V	$I_{HCFB_U(I)_OUT}$ = 24 A/V x HCFB_U(I)_OUT – 60 A
– 5 V … + 5 V [1]		12 A/V	$I_{HCFB_U(I)_OUT}$ = 12 A/V x HCFB_U(I)_OUT

[1] Only adjustable if the module is installed in a Power Unit that is used as single unit.

Formula for the RPCU_ADC_BLx block

If the PS-HCFBD 1/2 module is installed in a Power Unit that is used in a RapidPro stack with UCB, the current measurement output is represented by the output of the RPCU_ADC_BLx block of the RTI RapidPro Control Unit Blockset. You can use the following formula to get the current values.

Output Voltage Range	Current Measurement Range	Scaling Formula
0 … 5 V	± 60 A	$I_{MUX_ADC_out}$ = 120 A x MUX_ADC_out – 60 A

For further information, refer to Basics on A/D Conversion (RapidPro System – I/O Subsystem MPC565 Implementation Features 🕮).

Related topics

References

PS-HCFBD 1/2 Data Sheet 519
RPCU_ADC_BLx (RapidPro System – I/O Subsystem MPC565 RTI Reference 🕮)

Measuring RMS Values

Objective

When measuring RMS (root mean square) values note that many multimeter only cover the AC part of the signal, even if they measure in *true-RMS mode*.

Avoiding measuring errors

You can calculate the RMS value with the following formula:

$$I_{RMS} = \sqrt{(I_{DC})^2 + (I_{AC})^2}$$

- I_{DC} = measured across shunt with multimeter in DC operation mode
- I_{AC} = measured across shunt with multimeter in true-RMS mode

Related topics

References

PS-HCFBD 1/2 Data Sheet 519

Data Sheet

Where to go from here

Information in this section

PS-HCFBD 1/2 Data Sheet 519
This gives you a complete overview of the module's technical data.

PS-HCFBD 1/2 Configuration Template 522
You can copy and/or print out the template and use it as a master to document your configuration settings.

PS-HCFBD 1/2 Data Sheet

Technical data

Parameter	Specification [1)]
Identification	Top view 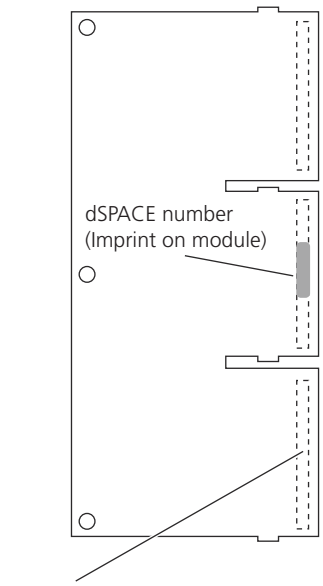 dSPACE number: DS1767
Channels	1 power stage channel to be used as full-bridge driver output

Parameter		Specification [1]
Software		Following software is required to work with the PS-HCFBD 1/2 module: ▪ ConfigurationDesk 3.0 (on dSPACE Release 6.3) with plug-in software ▪ ConfigurationDesk 3.0.1 (on dSPACE Release 6.4) with plug-in software ▪ All later ConfigurationDesk for RapidPro versions support the PS-HCFBD 1/2 module without additional software components.
Diagnostics		Overcurrent, temperature warning, overtemperature, current measurement error, shutdown
Output current	Max. value	$T_{Housing}$ = +25 °C (+77 °F) ▪ 42 A_{RMS} continuous; For information on avoiding measurement errors, refer to Measuring RMS Values on page 518. ▪ 60 A peak for 1 second
		$T_{Housing}$ = +60 °C (+140 °F) ▪ 29 A_{RMS} continuous; For information on avoiding measurement errors, refer to Measuring RMS Values on page 518. ▪ 60 A peak for 1 second
	Current limitation	60 A
	Chopper-off time	30 µs
Output resistance Ri		≈ 4 mΩ [2]
Operating voltage [3]		6 … 30 V
CTRL and direction control	Operation mode	Fast decay, slow decay (software-configurable)
	Maximum switching frequency	50 kHz
	CTRL input signal polarity	Inverted, non-inverted (software-configurable)
	DIR input signal polarity	Inverted, non-inverted (software-configurable)
Switching time	High side rise time	90 ns
	High side fall time	90 ns
	Low side rise time	90 ns
	Low side fall time	90 ns
Delay time	High side "ON"	400 ns
	High side "OFF"	620 ns
	Low side "ON"	400 ns
	Low side "OFF"	620 ns

Parameter		Specification [1]
Current measurement device	Output voltage range	0 … +5 V, –5 V … +5 V (software-configurable)
	Absolute measurement error [4]	0.5% ±200 mA
	Filter	Low-pass Butterworth filter (software-configurable): ▪ 1st order/2nd order ▪ 100 Hz ... 150000 Hz
Output voltage measurement	Input range	0 V ... 30 V
	Output range	0 V ... +5 V
	Bandwidth	0 ... 150 kHz
	Accuracy	1.0 %
Ubat measurement	Input range	0 V ... 30 V
	Output	0 V ... +5 V
	Bandwidth	0 ... 150 kHz
	Accuracy	1.0 %
Isolation		Level shifter: to eliminate ground potential differences between dSPACE RCP system (like MicroAutoBox) and the RapidPro Power Unit
Protection		▪ Overcurrent ▪ Overheat
Physical size (length x width)		▪ 60 x 129 mm (2.36 x 5.08 in.) ▪ Requires three slots

1) Unless stated otherwise, the specifications are valid only if the dSPACE hardware is correctly powered, switched on, and ready for operation.
2) For the all-in resistance of the system, you must add the modul's Ri to the Power Unit's output resistance.
3) The voltage for putting the module into operation is applied on the Power Unit's power supply inputs UBAT1 (rail 1) and UBAT2 (rail 2). For further information, refer to Calculating the Maximum Permissible Rail Supply Voltage on page 125.
4) Typical value at T_Housing = +25 °C (+77 °F) unless otherwise stated.

RP_HC_CAB1 power/load cable dSPACE provides a RP_HC_CAB1 power/load cable to connect a RapidPro Power Unit including PS-HCHBD and/or PS-HCFBD modules to power supply and load. For further information, refer to RP_HC_CAB1 Power/Load Cable on page 573.

Related topics

References

PS-HCFBD 1/2 Configuration Template..... 522

PS-HCFBD 1/2 Configuration Template

Objective

You can use the following template as a master to document the settings of your module.

Identification and location

Enter the following parameters to identify and locate the module unambiguously.

Parameter		Specification	Label Location
Identification	dSPACE number	DS1767	Top view 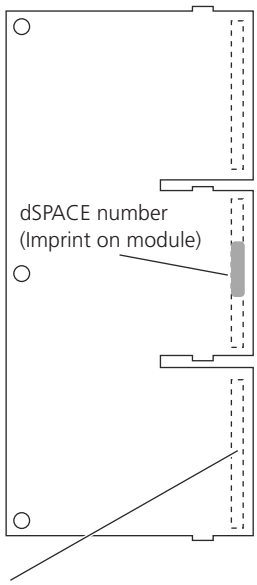
	Serial number		
	Module variant		
Place of installation	System name (unit/stack name)		
	Layer number(s) (unit position in a stack)		
	Slot number (slot on the unit's carrier board)		

Software configuration

Enter the settings for the channel in the table below:

Parameter	CH1
Channel name	
Output voltage	
Operation mode	
CTRL input	
DIR input	
Current limit	
Output voltage range	
Enable digital low-pass filter	
Digital low-pass filter frequency	
Digital low-pass filter order	

Related topics

References

PS-HCFBD 1/2 Data Sheet..... 519

PS-HCHBD 2/2 Module

Short description

The PS-HCHBD 2/2 module (DS1768) is a high-current, half-bridge power stage module with two channels for driving loads in different modes in 12 V or 24 V power supply systems.

Where to go from here

Information in this section

Module Overview 526
Information on the module's features, components, and functionality will help you assess its possible uses.

Software Configuration 535
The PS-HCHBD 2/2 module provides parameters which are software-configurable via ConfigurationDesk for RapidPro.

Connection to Loads 539
You can use the PS-HCHBD 2/2 module to drive loads connected to GND or loads connected to UBAT. Dependent on the application, you have to connect the outputs in different ways.

Module in Use 544
You have access to information (i.e., temperatures on the circuit board) which the module provides during operation.

Data Sheet 550
The data sheet summarizes the technical data of the PS-HCHBD 2/2 module; there is also a template that you can use as a master to document your configuration settings.

Module Overview

Where to go from here

Information in this section

Module Features.....526
Module Components and Functionality.....527

Module Features

Main features

The main features of the PS-HCHBD 2/2 module are:

- Two channels for driving loads.
- Operation modes to adapt the outputs to different use scenarios (software-configurable):
  - Half-bridge
  - High-side driver
  - Low-side driver
  - Driving three-phase electric motors (BLDC/BLAC), which requires two PS-HCHBD 2/2 modules in the same Power Unit (particular RoutingID needed)
- Output current:
  - Max. 60 A for one second
  - 42 A_{RMS} continuous (depends on the housing temperature of the unit/stack)

  The maximum software-configurable current depends on the selected operation mode.)
- Chopper current limitation of the output current for each channel (software-configurable), for example, to reduce power dissipation if a DC motor seizes
- Current measurement device with low-pass filter on each channel (software-configurable)
- Voltage measurement to monitor UBAT and the voltage in the output branch
- Diagnostic functions
- Protection against overcurrent and overtemperature
- Operating voltage: 6 … 30 V (to drive loads in 12 V or 24 V power supply systems)

Software

Following software is required to work with the PS-HCHBD 2/2 module:

- ConfigurationDesk 3.0 (on dSPACE Release 6.3) with plug-in software
- ConfigurationDesk 3.0.1 (on dSPACE Release 6.4) with plug-in software

- All later ConfigurationDesk for RapidPro versions support the PS-HCHBD 2/2 module without additional software components.

More features

For a complete list of the module's features, refer to PS-HCHBD 2/2 Data Sheet on page 550.

Module Components and Functionality

Objective

The module's components are shown on the basis of its simplified I/O circuit. More detailed descriptions of the components are given if their functions are not clear from the I/O circuit.

Internal I/O circuits depending on the operation mode

The internal functionality of the module's I/O circuit depends on the possible combinations of the software-configurable operation modes, and output driver modes. You can select the operation and output driver modes named in the table below via ConfigurationDesk for RapidPro:

Operation Mode	Description
General purpose, single channel	Only channel 1 is available. The second channel is deactivated to provide a maximum output current of up to 60 A on the first channel. You can configure different output driver modes for this operation mode (see table below).
General purpose, double channel	You can configure the two channels of the module separately. The maximum output current is 30 A for each channel. You can configure different output driver modes for this operation mode (see table below).
Electric drive, two half bridges	In *Electric drive, two half bridges* operating mode you can switch the connected load to UBAT, to GND or to high impedance. The sum of the current limit settings for both channels of one PS-HCHBD 2/2 module must not exceed 60 A. Setting one PS-HCHBD 2/2 module to *Electric drive, two half bridges* mode without setting a second module in the same Power Unit to the *Electric drive, half bridge and brake chopper* mode requires the PIC firmware version 1.6 or later.
The following combination: ▪ Electric drive, two half bridges ▪ Electric drive, half bridge and brake chopper	The combination of both operation modes are for driving three-phase electrical motors (BLDC/BLAC), including an optional brake chopper. Two PS-HCHBD 2/2 modules are required in the same Power Unit in this use scenario. One module must be set to *Electric drive, two half bridges* mode, the other to *Electric drive, half bridge and brake chopper* mode. The maximum output current is 60 A for each channel.

There are additional output driver modes selectable for the operation modes General purpose, single channel and General purpose, double channel:

Output Driver Mode	Description
Half-bridge	In half-bridge operating mode the input signal switches the connected load from UBAT to GND and vice versa.
Low-side	In low-side operating mode you can drive a load that is connected to UBAT.
High-side	In high-side operating mode you can drive a load that is connected to GND.

General purpose, single channel — General purpose, double channel The following illustration is valid for the two operation modes named above. You can select the operation modes for the module via ConfigurationDesk for RapidPro.

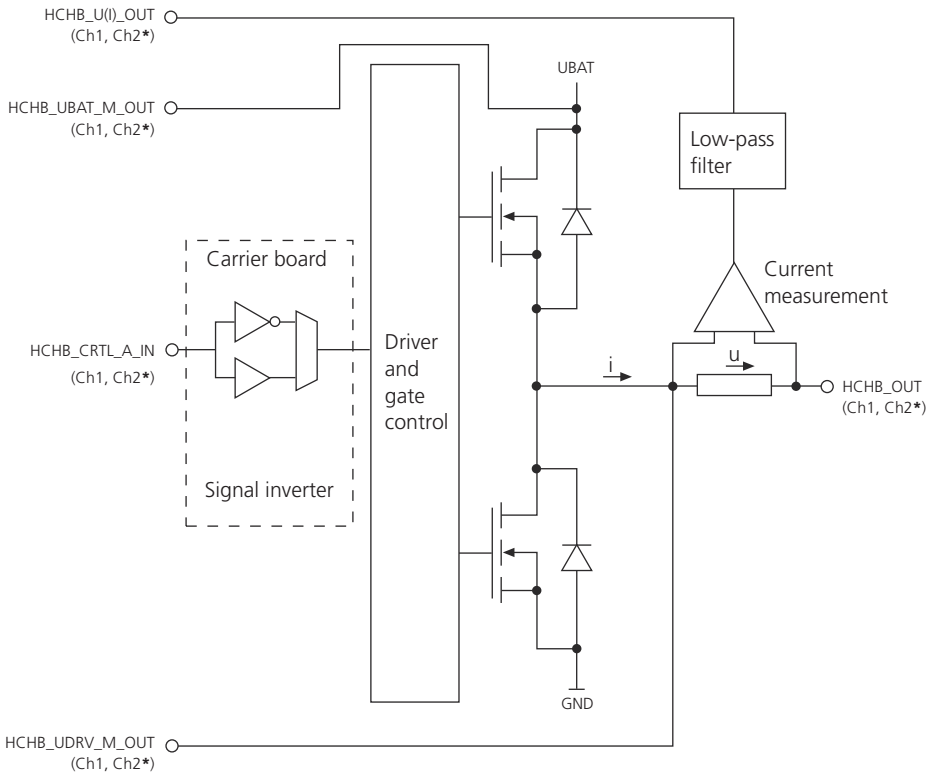

***** Channel 2 is deactivated in **General purpose**, **single channel** mode.

Electric drive, two half bridges The following illustration shows the I/O circuit of the module in Electric drive, two half bridges mode.

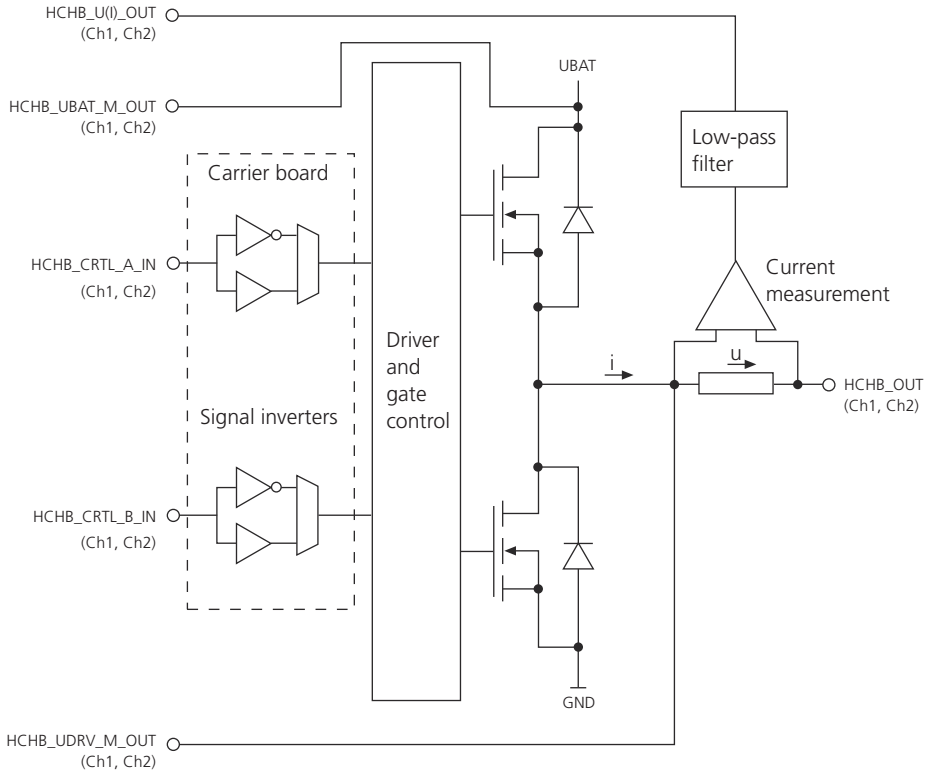

Electric drive, two half bridges — Electric drive, half bridge and brake chopper The combination of both operation modes are for driving three-phase electrical motors (BLDC/BLAC). Two PS-HCHBD 2/2 modules are required in the same Power Unit in this use scenario. One module must be configured to the *Electric drive, two half bridges* mode. The other module to Electric drive, half bridge and brake chopper mode.

The I/O circuit of the module in Electric drive, two half bridges mode is shown above.

The I/O circuit of the first channel of the module in Electric drive, half bridge and brake chopper mode is the same as for the Electric drive, two half bridges mode.

The illustration below shows the second channel of the PS-HCHBD 2/2 module in Electric drive, half bridge and brake chopper mode. The channel can be used as a brake chopper to control the voltage rise on Ubat induced by the motor if it works as a generator. The use of the brake chopper channel is optional and may be not necessary for most BLDC/BLAC use scenarios.

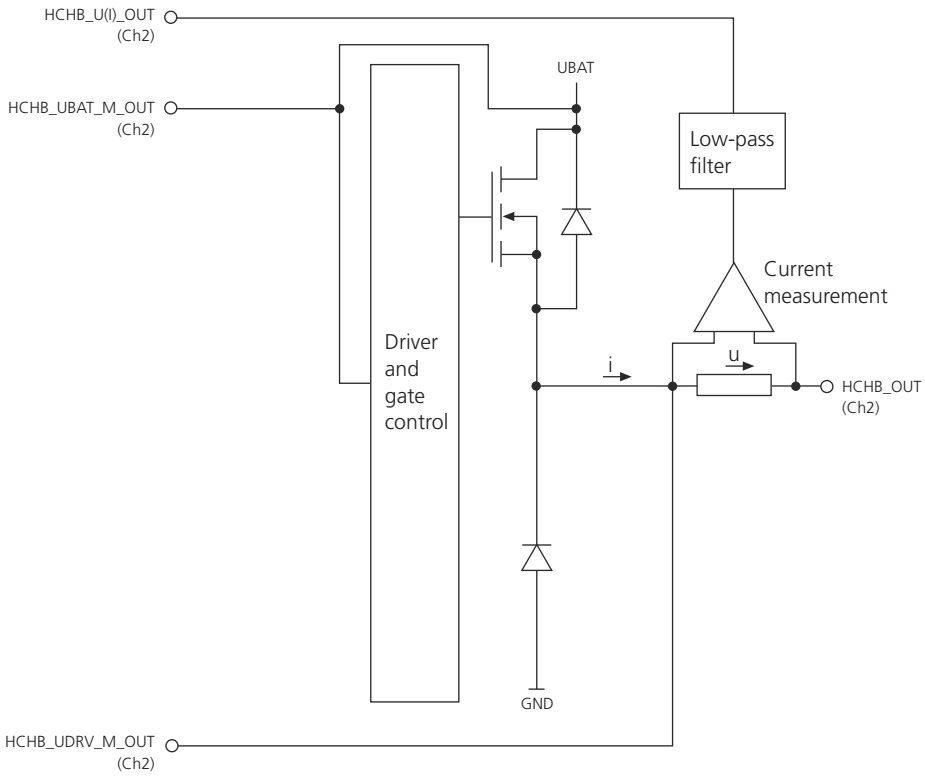

Signal inverter

The logic level of the control inputs can be inverted by signal inverters, which are integrated on the unit's carrier board. You can configure the signal polarity via ConfigurationDesk for RapidPro. For details, refer to Software-configurable parameters on page 535.

Current measurement

Each channel includes a current measurement device with configurable low-pass filter. The load current is measured via a shunt resistor. The current measurement signals are available at output pins (HCHB_U(I1)_OUT and HCHB_U(I2)_OUT). They can be used as analog current feedback for closed-loop applications.

Note

The behavior of the load current and therefore the behavior of the corresponding current measurement signal strongly depends on the kind of load and the respective control signal. The following table is based on the behavior of resistive loads. It shows the dependencies between the control inputs and the polarity of the current measurement signal.
A load current flowing in the direction shown by the arrow in the illustration above results in a negative current measurement signal in relation to zero scale.

Operation Mode	Output Driver Mode	HCHB_ CTRL_ A_IN	HCHB_ CTRL_ B_IN	HCHB_OUT	Polarity of Current Measurement Signal
▪ General purpose, single channel ▪ General purpose, double channel	Half-bridge driver	0 [1]	— [2]	Low	+ [3]
		1 [4]		High	– [3]
	Low-side driver	1		Tristate (high-impedance)	No current
		0		Low	+
	High-side driver	0		Tristate	No current
		1		High	–
▪ Electric drive, two half bridges ▪ Electric drive, half bridge and brake chopper [5]	— [6]	0	0	Tristate	No current
		1	0	High	–
		0	1	Low	+
		1	1	Tristate	No current

[1] 0 = logic low level
[2] Signal has no effect on the module's behavior in *General purpose, single channel* and *General purpose, double channel* mode. In these modes, it is not necessary to connect the signal HCHB_CTRL_B_IN to any signal source.
[3] + means: positive signal in relation to zero scale. – means: negative signal in relation to zero scale. Zero scale: 0 V for voltage range –5 V … +5 V and 2.5 V for voltage range 0 … +5 V
[4] 1 = logic high level
[5] The table is valid only for the first channel of the module in *Electric drive, half bridge and brake chopper* mode.
[6] Output driver mode is not selectable in *Electric drive, two half bridges* and *Electric drive, half bridge and brake chopper* mode.

Tip

To scale the output of the current measurement, refer to Current Measurement: Scaling the Output Voltages on page 547.

Low-pass filter The current measurement device of the channel provides a low-pass filter. The filter consists of a hardware component and a configurable software component (digital low-pass filter) as shown in the illustration below.

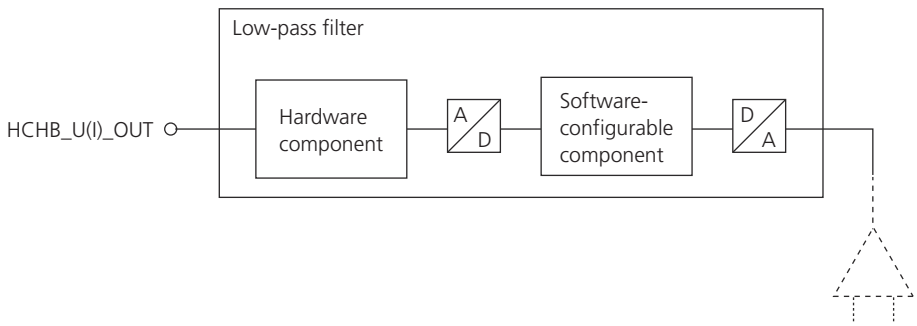

The integrated A/D - D/A conversion results in an improved common mode immunity in conjunction with a high measurement bandwidth.

Note

The interaction of the filter's hardware and software component provides the best possible filter characteristics but can restrict the maximum possible bandwidth.
You can deactivate the software component of the filter via ConfigurationDesk for RapidPro to use the maximum possible bandwidth (see *Enable digital low-pass filter*, Software-configurable parameters on page 535).

Voltage measurement

You can monitor the output voltages of the PS-HCHBD 2/2 module with different output signals:

- HCHB_UBAT_M_OUT

  Output signal to monitor the internal voltage of the unit's rail the module is installed on. This enables you to improve the controller dynamics of engine controls.
- HCHB_UDRV_M_OUT

  Output signal to monitor the output voltage of each channel.

Chopper current limitation

An integrated chopper current limitation limits the output current, for example, to reduce power dissipation, if a DC motor seizes.

As soon as the current limit is reached, the affected channel switches off for a fixed time (= chopper off-time). The illustration below shows the time characteristic of the output current if an inductive load is connected.

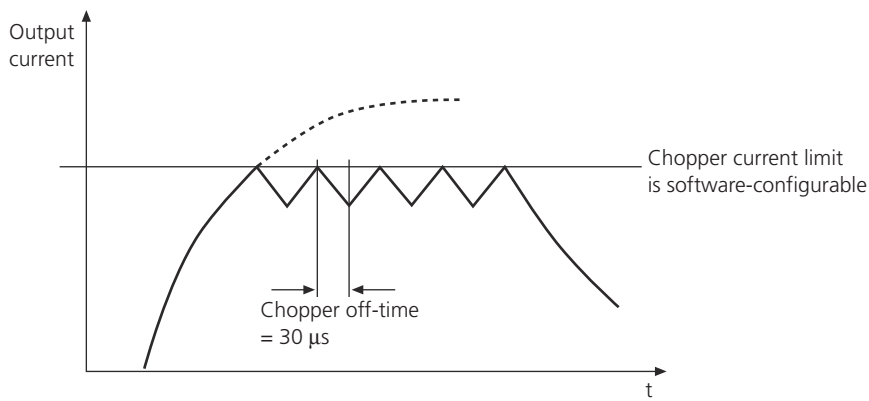

Restriction of the Power Unit's maximum operating voltage

The maximum possible operating voltage of the Power Unit is restricted to +30 V, if a PS-HCHBD 2/2 module is installed.

The voltage for putting the module into operation is applied on the Power Unit's power supply inputs UBAT1 (rail 1) and UBAT2 (rail 2). If this voltage is higher than 30 V, the channels of the module which is supplied by the affected rail are deactivated.

Connecting the Power Unit to the host PC

You must use the USB_CAB12 PC Connection Cable for Calibration Hub/RapidPro on page 584 to connect the Power Unit with installed PS-HCHBD 2/2 module to the host PC for a proper data connection.

Related topics

References

Module Features..... 526

Software Configuration

Configuration via ConfigurationDesk for RapidPro

Objective

Various parameters of the module are configurable via ConfigurationDesk for RapidPro.

Software-configurable parameters

Parameter	Range/Setting	Factory Default Setting	Description	Valid
Operation mode	General purpose, single channel	General purpose, double channel	Only channel 1 is available. The second channel is deactivated to provide a maximum output current of up to 60 A on the first channel. You can configure different output driver modes for this operation mode (see below).	All channels
	General purpose, double channel		You can configure the two channels of the module separately and use them with different output driver modes (see below). The maximum output current is 30 A for each channel.	
	Electric drive, two half bridges		You can switch the connected load to UBAT, to GND or to high impedance. The sum of the current limit settings for both channels of one PS-HCHBD 2/2 module must not exceed 60 A. Setting one PS-HCHBD 2/2 module to *Electric drive, two half bridges* mode without setting a second module in the same Power Unit to the *Electric drive, half bridge and brake chopper* mode requires the PIC firmware version 1.6 or later.	
	The following combination:		The combination of both operation modes are for driving three-phase electrical motors (BLDC/BLAC)	

Parameter	Range/Setting	Factory Default Setting	Description	Valid
	▪ Electric drive, two half bridges ▪ Electric drive, half bridge and brake chopper		including an optional brake chopper. Two PS-HCHBD 2/2 modules are required in one Power Unit in this use scenario. One module must be set to *Electric drive, two half bridges* mode, the other to *Electric drive, half bridge and brake chopper* mode. If both modules are in the same *Electric drive* mode a diagnostic message occurs and the modules are disabled. Three channels of the modules are used to drive the three phases of the motor. The second channel of the module in *Electric drive, half bridge and brake chopper* mode can be used as a brake chopper to control the voltage rise on Ubat induced by the motor if it works as a generator. The maximum output current is 60 A for each channel. If both modules are in the *Electric drive, half bridge and brake chopper* mode, a diagnostic message occurs and the modules are disabled.	
Output voltage range	▪ 0 … +5 V ▪ –5 V … +5 V	0 … +5 V	*Installed in a Power Unit that is used as a single unit:* The output voltage configuration allows you to adapt the analog outputs to different types of dSPACE I/O boards.	All channels
			Installed in a Power Unit in a stack with unit connection bus (UCB): The output voltage is fixed at 0 … +5 V.	
Output driver mode [1)]	Half-bridge	Half-bridge	In half-bridge output driver mode, the input signal switches the	Per channel

Parameter	Range/Setting	Factory Default Setting	Description	Valid
			connected load from UBAT to GND and vice versa.	
	Low-side		In low-side output driver mode, you can drive a load that is connected to UBAT.	
	High-side		In high-side output driver mode, you can drive a load that is connected to GND.	
Current limit (5.0 A ... x0.0 A)	General purpose, double channel mode 5.0 A ... 30.0 A	30 A	You can set the maximum possible output current to adapt it to the specifications of your connected load.	Per channel
	General purpose, single channel mode 5.0 A ... 60.0 A	60 A		
	Electric drive, two half bridges mode 5.0 A ... 60.0 A [2)]	30 A		
	Electric drive, two half bridges mode combined with Electric drive, half bridge and brake chopper mode 5.0 A ... 60.0 A	30 A		
Chopper activation threshold voltage (0.0 V ... 30.0 V)	0.0 V ... 30.0 V	30 V	If the input voltage exceeds the threshold, the brake chopper is turned on.	Only adjustable for the second channel if the Operation mode is set to Electric drive, half bridge and brake chopper. NOTE: The value between the activation and deactivation thresholds must be not below
Chopper deactivation threshold voltage (0.0 V ... 30.0 V)	0.0 V ... 30.0 V	28 V	If the input voltage falls below the threshold, the brake chopper is turned off.	

Parameter	Range/Setting	Factory Default Setting	Description	Valid
				2 V, otherwise an error message will be output.
Signal polarity	▪ Non-inverted ▪ Inverted	Non-inverted	You can set the input signal polarity of the HCHB_CTRL_A_IN and HCHB_CTRL_B_IN pin.	Per channel
Enable digital low-pass filter	▪ True ▪ False	True	The interaction of the filter's hardware and software components provides the best possible filter characteristics but can restrict the maximum possible bandwidth. You can disable the software component of the filter to use the maximum possible bandwidth of the filter.	Per channel
Digital low-pass filter frequency (100 Hz ... 150000 Hz)	100 Hz ... 150000 Hz	6500 Hz	You can set the cutoff frequency of the digital low-pass filter that is part of the module's current measurement branch.	Per channel
Digital low-pass filter order	▪ 1st order ▪ 2nd order	1st order	You can set the order of the digital low-pass filter that is part of the module's current measurement branch.	Per channel

1) Output driver mode is not selectable in *Electric drive, two half bridges* and *Electric drive, half bridge and brake chopper* mode.

2) If you do not combine *Electric drive, two half bridges* mode with the *Electric drive, half bridge and brake chopper* mode, the sum of the current limit settings for both channels of one PS-HCHBD 2/2 module must not exceed 60 A.

Related topics

References

PS-HCHBD 2/2 Configuration Template..... 553

Connection to Loads

Objective

You can use the PS-HCHBD 2/2 module to drive loads which are connected to GND, or to UBAT. Dependent on the application, you have to connect the outputs differently.

Where to go from here

Information in this section

Driving Loads Connected to GND 539
Driving Loads Connected to UBAT 540
Driving BLDC/BLAC Motors 542

Driving Loads Connected to GND

Usage as high-side driver

If you want to drive loads that are connected to GND, like valves, relays, heating elements, etc., you can use the PS-HCHBD 2/2 module as a high-side driver. To do this, connect the load to HCHB_OUT pins and GND.

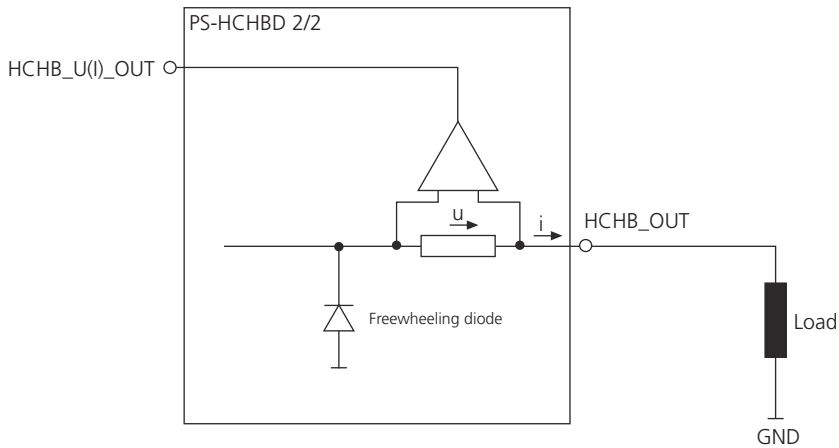

Note

The high-side driver output mode is available only if the PS-HCHBD 2/2 module is set to **General purpose, single channel** or **General purpose, double channel mode** (see Software-configurable parameters on page 535).

Connecting output pins

The HCHB_OUT output of each channel is available at 12 pins of one of the Power Unit's front connectors.

Note

- Connect all the output pins to the load to get the maximum output current.
- Star point connection is recommended for connecting the pins to the load. The star point must be located as close as possible to the outside of the matching Sub-D connector that is connected to the Power Unit.
- To reduce electromagnetic interference when operating at high output currents and/or high PWM frequencies, use a shielded motor power cable. Connect the cable shield on the motor side to the motor housing. The motor housing therefore should be connected to the vehicle battery ground either directly or via the vehicle chassis. On the RapidPro side, connect the cable shielding to the RapidPro housing via the connector shell of the Power Unit's front connectors.

For basic information on proper cabling, such as aspects of grounding, shielding, and wiring up external devices, refer to Proper Cabling (RapidPro System Hardware Installation Guide 🕮).

Related topics

References

Driving BLDC/BLAC Motors..... 542
Driving Loads Connected to UBAT..... 540

Driving Loads Connected to UBAT

Usage as low-side driver

If you want to drive loads that are connected to UBAT, like valves, relays, heating elements, etc., you can use the PS-HCHBD 2/2 module as a low-side driver. To do this, connect the load to UBAT and HCHB_OUT pins.

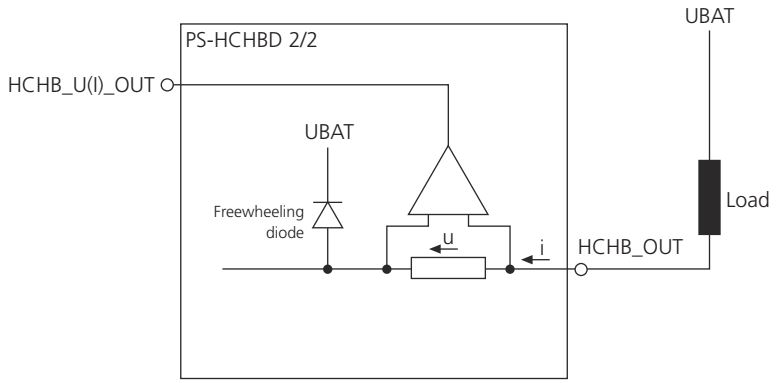

Note

The low-side driver output mode is available only if the PS-HCHBD 2/2 module is set to **General purpose, single channel** or **General purpose, double channel mode** (see Software-configurable parameters on page 535).

Note

The freewheeling diode can cause unexpected behavior for specific external connections. For further information, refer to the comparable PS-LSD 6/1 module: Notes on Connecting an Emergency Switch on page 416.

Load dump protection

Although the carrier board of the Power Unit is equipped with load dump protection, the power outputs are not protected in this way. They are protected only indirectly via the load resistances of the connected loads.

⚠ WARNING

Load dump and/or static overvoltage on the PS-HCHBD 2/2 module's power outputs damages the Power Unit.

To avoid damage to the Power Unit:

- Take suitable measures against load dump and/or static overvoltage on the part of the load.
- Use the PS-HCHBD 2/2 module's low-side driver mode only if load dump and/or static overvoltage cannot occur in your application.

Connecting output pins

The HCHB_OUT output of each channel is available at 12 pins of one of the Power Unit's front connectors.

Note

- Connect all the output pins to the load to get the maximum output current.
- Star point connection is recommended for connecting the pins to the load. The star point must be located as close as possible to the outside of the matching Sub-D connector that is connected to the Power Unit.
- To reduce electromagnetic interference when operating at high output currents and/or high PWM frequencies, use a shielded motor power cable. Connect the cable shield on the motor side to the motor housing. The motor housing therefore should be connected to the vehicle battery ground either directly or via the vehicle chassis. On the RapidPro side, connect the cable shielding to the RapidPro housing via the connector shell of the Power Unit's front connectors.

For basic information on proper cabling, such as aspects of grounding, shielding, and wiring up external devices, refer to Proper Cabling (RapidPro System Hardware Installation Guide 🕮).

Related topics

References

Driving BLDC/BLAC Motors..... 542
Driving Loads Connected to GND..... 539

Driving BLDC/BLAC Motors

Objective

If you want to drive three-phase electric motors (BLDC/BLAC), you need two PS-HCHBD 2/2 modules.

Use scenario

Both modules must be inserted in the same Power Unit.

One module must be set to **Electric drive, two half bridges** mode, the other to **Electric drive, half bridge and brake chopper** mode.

Three channels of the modules are used to drive the three phases of the motor. The second channel of the module in **Electric drive, half bridge and brake chopper** mode can be used as a brake chopper to control the voltage rise on Ubat induced by the motor if it works as a generator. The use of the brake chopper channel is optional and may be not necessary for most BLDC/BLAC use scenarios.

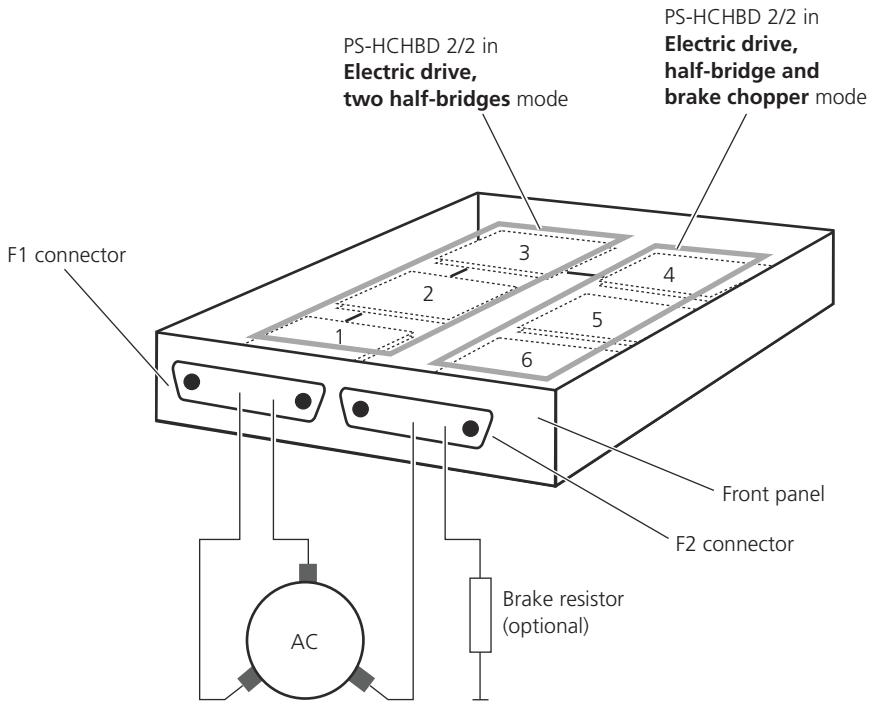

Contact dSPACE for further information, such as RoutingID and further instructions.

Connecting output pins

To reduce electromagnetic interference when operating at high output currents and/or high PWM frequencies, use a shielded motor power cable. Connect the cable shield on the motor side to the motor housing. The motor housing therefore should be connected to the vehicle battery ground either directly or via the vehicle chassis. On the RapidPro side, connect the cable shielding to the RapidPro housing via the connector shell of the Power Unit's front connectors.

Monitoring diagnosis

Each PS-HCHBD 2/2 module provides the output signal HCHB_DIAG_ST_OUT on its corresponding rear connector in the BLDC/BLAC use scenario. Both outputs are set to high level (TTL) if at least one PS-HCHBD 2/2 module is in one of the following diagnosis states:

- Overheat
- Current measurement failure

Related topics

References

Driving Loads Connected to GND 539
Driving Loads Connected to UBAT 540

Module in Use

Objective

During operation you can access status information of the PS-HCHBD 2/2 module via ConfigurationDesk for RapidPro. The module provides:

- Continuous monitoring of the module's temperature
- Diagnostic messages about the status of the module and the status of the connection to external devices

Where to go from here

Information in this section

Monitoring 544
Diagnostics 545
Current Measurement: Scaling the Output Voltages 547
Measuring RMS Values 549

Monitoring

Objective

The PS-HCHBD 2/2 module provides sensors to monitor temperatures on the module's circuit board. You can access this information via ConfigurationDesk for RapidPro.

Monitored parameters

The PS-HCHBD 2/2 provides monitoring of the following parameters:

Parameter	Description	Valid
Temperature sensor T1	The temperature is measured in two positions on the module's circuit board. The monitored temperatures serve for troubleshooting purposes.	Channel 1
Temperature sensor T2		Channel 2

Positions of temperature sensors

The following illustration shows the topside of the PS-HCHBD 2/2 module, with the positions of the temperature sensors.

Top view

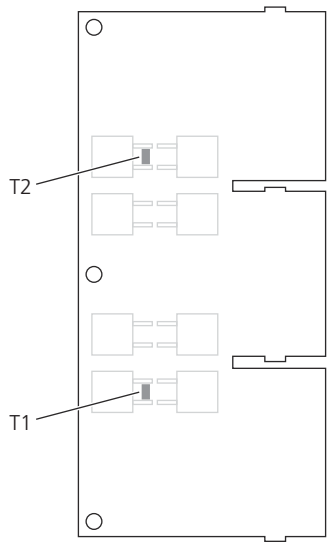

Diagnostics

Diagnostic warnings and diagnostic errors

The diagnostic messages can be divided into warnings and errors.

- Diagnostic warnings occur if a fault is detected. Each warning is dropped as soon as the reason for it is removed.
- Diagnostic errors cause the module functions to be disabled (shutdown). If a diagnostic error occurs, you have to remove the source of the error and reset the module's diagnostics via ConfigurationDesk for RapidPro.

Note

Depending on where a PS-HCHBD 2/2 module is inserted (rail 1 – slots 1 … 3, or rail 2 – slots 4 … 6), the corresponding front I/O connector of the Power Unit must be connected to the power supply. Otherwise you get unpredictable diagnostic messages.

Possible diagnostic messages

The PS-HCHBD 2/2 module provides the following diagnostic messages via ConfigurationDesk for RapidPro:

Diagnostic Message		Description	Valid
Warning	Overcurrent	If the current limit is exceeded, the message "Overcurrent" is displayed. The current limit is software-configurable via ConfigurationDesk for RapidPro. The module functions as a current limiter. For details, refer to Chopper current limitation on page 533.	Per channel
	Temperature warning	A temperature sensor (T1, T2) has reached a critical value of approx. 100 °C (212 °F).	Per channel
Error	Overtemperature	At least one of the temperature sensors (T1, T2) has reached a critical value of approx. 105 °C (221 °F). The module is switched to shutdown mode.	Per channel
	Current measurement error	The PS-HCHBD 2/2 module provides internal error detection in the current measurement branches. The module is switched to shutdown mode. **Note** If the PS-HCHBD 2/2 module is used in *Electric drive, two half bridges* or *Electric drive, half bridge and brake chopper* mode (BLDC/BLAC use scenario) and a current measurement error is detected on one module the other module is deactivated too (switched to shutdown mode).	All channels
	Module configuration error	This diagnostic message only occurs if the PS-HCHBD 2/2 module is set to *Electric drive, two half bridges* or *Electric drive, half bridge and brake chopper* mode. If you use *Electric drive, two half bridges* mode without *Electric drive, half bridge and brake chopper* mode, the module configuration error occurs for the following case: ▪ If the sum of the current limit settings for both channels of one PS-HCHBD 2/2 module exceeds 60 A. If you combine *Electric drive, two half bridges* mode and *Electric drive, half bridge and brake chopper* mode, the module configuration error occurs for two cases: ▪ If both PS-HCHBD 2/2 modules in a Power Unit are set to the *Electric drive, half bridge and brake chopper* operation mode. - OR - ▪ If the software-configurable *Current limit* parameter of the channels which are connected to the motor	All channels

Diagnostic Message		Description	Valid
		phases do not have the same values. The current limit values of the brake chopper channel can differ. If a module configuration error occur, the channels of both modules are deactivated. Both modules are switched to shutdown mode.	
	Inter-module communication error	This diagnostic message only occurs if the PS-HCHBD 2/2 module is set to *Electric drive, two half bridges* or *Electric drive, half bridge and brake chopper* mode (BLDC/BLAC use scenario). The PS-HCHBD 2/2 modules are serially connected in the BLDC/BLAC use scenario. The modules provide an internal error detection (watchdog mechanism) in the serial connection. If the serial module connection does not work properly, the channels of both modules are deactivated. Both modules are switched to shutdown mode.	All channels
	Shutdown	This message indicates that the output drivers of the module have been disabled. This can happen, for example, if the ENABLE pin of the single unit is disabled.	All channels

Current Measurement: Scaling the Output Voltages

Objective

The module's current measurement device provides voltages as measurement result. You need to scale these voltages to get the current values.

Formulas to scale the voltages on the rear I/O connectors

The values of the scaling formula and the formula itself depend on the settings of the module. The gain value is a result of the settings Output Voltage Range and Current Measurement Range. You can use the following formulas to scale the voltages on the specific rear connector pins of a Power Unit used as single unit.

The formulas in the table below are valid if you drive the module in General purpose, single channel, Electric drive, two half bridges, or Electric drive, half bridge and brake chopper operation mode:

Output Voltage Range	Current Measurement Range	Gain	Scaling Formula
0 … 5 V	± 60 A	24 A/V	$I_{HCFB_U(I)_OUT}$ = 24 A/V x HCFB_U(I)_OUT – 60 A
– 5 V … + 5 V [1]		12 A/V	$I_{HCFB_U(I)_OUT}$ = 12 A/V x HCFB_U(I)_OUT

[1] Only adjustable if the module is installed in a Power Unit that is used as single unit.

The table below shows the formulas if the module is set to General purpose, double channel operation mode:

Output Voltage Range	Current Measurement Range	Gain	Scaling Formula
0 … 5 V	± 30 A	12 A/V	$I_{HCHB_U(I)_OUT}$ = 12 A/V x HCHB_U(I)_OUT – 30 A
– 5 V … + 5 V [1]		6 A/V	$I_{HCHB_U(I)_OUT}$ = 6 A/V x HCHB_U(I)_OUT

[1] Only adjustable if the module is installed in a Power Unit that is used as single unit.

Formula for the RPCU_ADC_BLx block

If the PS-HCHBD 2/2 module is installed in a Power Unit that is used in a RapidPro stack with UCB, the current measurement output is represented by the output of the RPCU_ADC_BLx block of the RTI RapidPro Control Unit Blockset. You can use the following formulas to get the current values.

The formula in the table below are valid if you drive the module in General purpose, single channel, Electric drive, two half bridges, or Electric drive, half bridge and brake chopper operation mode:

Output Voltage Range	Current Measurement Range	Scaling Formula
0 … 5 V	± 60 A	$I_{MUX_ADC_out}$ = 120 A x MUX_ADC_out – 60 A

The table below shows the formula if the module is set to General purpose, double channel operation mode:

Output Voltage Range	Current Measurement Range	Scaling Formula
0 … 5 V	± 30 A	$I_{MUX_ADC_out}$ = 60 A x MUX_ADC_out – 30 A

For further information, refer to Basics on A/D Conversion (RapidPro System – I/O Subsystem MPC565 Implementation Features 🕮).

Related topics

References

PS-HCHBD 2/2 Data Sheet 550
RPCU_ADC_BLx (RapidPro System – I/O Subsystem MPC565 RTI Reference 🕮)

Measuring RMS Values

Objective

When measuring RMS (root mean square) values note that many multimeters only cover the AC part of the signal, even if they measure in *true-RMS mode*.

Avoiding measuring errors

You can calculate the RMS value with the following formula:

$$I_{RMS} = \sqrt{(I_{DC})^2 + (I_{AC})^2}$$

- I_{DC} = measured across shunt with multimeter in DC operation mode
- I_{AC} = measured across shunt with multimeter in true-RMS mode

Related topics

References

PS-HCHBD 2/2 Data Sheet..... 550

Data Sheet

Where to go from here

Information in this section

PS-HCHBD 2/2 Data Sheet..... 550
This gives you a complete overview of the module's technical data.

PS-HCHBD 2/2 Configuration Template..... 553
You can copy and/or print out the template and use it as a master to document your configuration settings.

PS-HCHBD 2/2 Data Sheet

Technical data

Parameter	Specification [1)]
Identification	Top view 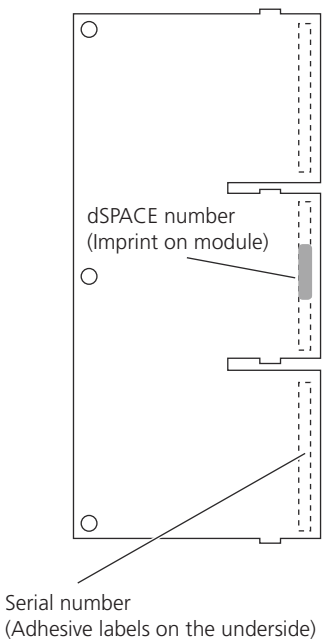 dSPACE number: DS1768
Channels	2 independent high-current power stage channels. Software-configurable operation modes to adapt the outputs to different use scenarios:

Parameter		Specification [1]
		▪ Half-bridge ▪ High-side driver ▪ Low-side driver ▪ Driving three-phase electric motors (BLDC/BLAC), which requires two PS-HCHBD 2/2 modules in the same Power Unit
Software		Following software is required to work with the PS-HCHBD 2/2 module: ▪ ConfigurationDesk 3.0 (on dSPACE Release 6.3) with plug-in software ▪ ConfigurationDesk 3.0.1 (on dSPACE Release 6.4) with plug-in software ▪ All later ConfigurationDesk for RapidPro versions support the PS-HCHBD 2/2 module without additional software components.
Diagnostics		Overcurrent, current measurement error, temperature warning, overtemperature, module configuration error, inter-module communication error, shutdown

Output current	Max. value	$T_{Housing}$ = +60 °C (+140 °F)
		42 A_{RMS} continuous [2]
		60 A peak per channel for 1 second [2]
		Exception for **General purpose, double channel** operation mode:
		▪ Only one channel active:
		  ▪ 30 A_{RMS} continuous [2]
		▪ Both channels active:
		  ▪ 19 A_{RMS} continuous per channel [2]
		  30 A peak per channel for 1 second [2]
		For information on avoiding measurement errors, refer to Measuring RMS Values on page 499.

	Current limitation	5 A ... 60 A per channel (software-configurable) Exception for **General purpose, double channel** operation mode: 5 A ... 30 A (software-configurable)
	Chopper-off time	30 µs
Output resistance Ri		≈ 2 mΩ [3]
Operating voltage [4]		6 … 30 V
Input signal polarity		Inverted, non-inverted (software-configurable)
Maximum switching frequency		50 kHz

Parameter		Specification [1]
Switching time	High side rise time	90 ns
	High side fall time	90 ns
	Low side rise time	90 ns
	Low side fall time	90 ns
Delay time	High side "ON"	400 ns
	High side "OFF"	620 ns
	Low side "ON"	400 ns
	Low side "OFF"	620 ns
Dead time		500 ns
Current measurement device	Voltage output range	0 … +5 V, –5 V … +5 V (software-configurable)
	Absolute measurement error [5]	0.5% ±200 mA
	Filter	Low-pass Butterworth filter (software-configurable): ▪ 1st order/2nd order ▪ 100 Hz ... 150000 Hz
Output voltage measurement	Input range	0 V ... 30 V
	Output range	0 V ... +5 V
	Bandwidth	0 ... 150 kHz
	Accuracy	1.0 %
Ubat measurement	Input range	0 V ... 30 V
	Output range	0 V ... +5 V
	Bandwidth	0 ... 150 kHz
	Accuracy	1.0 %
Isolation		Level shifter: to eliminate ground potential differences between dSPACE RCP system (like MicroAutoBox) and the RapidPro Power Unit
Protection		▪ Overcurrent ▪ Overheat
Physical size (length x width)		▪ 60 x 129 mm (2.36 x 5.08 in.) ▪ Requires three slots (rail 1 or rail 2 of the Power Unit)

[1] Unless stated otherwise, the specifications are valid only if the dSPACE hardware is correctly powered, switched on, and ready for operation.
[2] Depending on the actual current waveform, the current limitation is already triggered at lower values.
[3] For the all-in resistance of the system, you must add the module's Ri to the Power Unit's output resistance.
[4] The voltage for putting the module into operation is applied on the Power Unit's power supply inputs UBAT1 (rail 1) and UBAT2 (rail 2). For further information, refer to Calculating the Maximum Permissible Rail Supply Voltage on page 125.
[5] Typical value at T_Housing = +25 °C (+77 °F) unless otherwise stated.

RP_HC_CAB1 power/load cable dSPACE provides a RP_HC_CAB1 power/load cable to connect a RapidPro Power Unit including PS-HCHBD and/or PS-HCFBD modules to power supply and load. For further information, refer to RP_HC_CAB1 Power/Load Cable on page 573.

Related topics

References

PS-HCHBD 2/2 Configuration Template..... 553

PS-HCHBD 2/2 Configuration Template

Objective

You can use the following template as a master to document the settings of your module.

Identification and location

Enter the following parameters to identify and locate the module unambiguously.

Parameter		Specification	Label Location
Identification	dSPACE number	DS1768	Top view 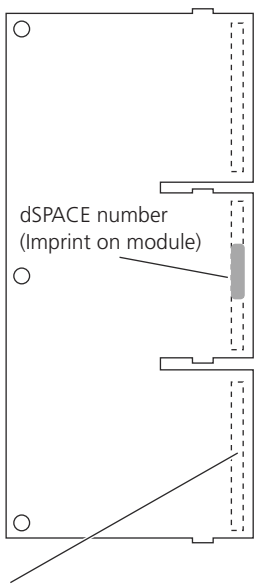
	Serial number		
	Module variant		
Place of installation	System name (unit/stack name)		
	Layer number(s) (unit position in a stack)		
	Slot number (slot on the unit's carrier board)		

Software configuration

Enter the settings for each channel in the table below:

Parameter	CH1	CH2
Operation mode		
Output voltage		
Channel name		
Current limit		
Output voltage range		
Enable digital low-pass filter		
Digital low-pass filter frequency		
Digital low-pass filter order		
Signal polarity – HCHB_CTRL_A		
Signal polarity – HCHB_CTRL_B		

Related topics

References

PS-HCHBD 2/2 Data Sheet..... 550

Accessories

Where to go from here

Information in this section

RapidPro Break-Out Boxes..... 556
The RapidPro Break-Out Boxes provide easy access to all the signals of both front connectors of a RapidPro unit.

Connection Cables..... 570

RapidPro Break-Out Boxes

Short description

The RapidPro Break-Out Boxes provide easy access to all the signals of both front connectors of a RapidPro unit. For example, you can:

- Check and/or reconnect signals without changing the already existing cable harness
- Connect sensors and/or actuators
- Connect measurement devices

Safety precautions

⚠ WARNING

Hazardous voltages! Depending on the connected devices and the modules used in the connected RapidPro units there can be dangerous voltages on the connectors of the Break-Out Boxes. Risk of serious injury or death due to electric shock

Observe all safety precautions stated before using the Break-Out Boxes. These are:

- General precautions for the RapidPro System. Refer to Safety Precautions on page 21.
- Specific precautions for the boxes. Refer to Safety Precautions for Using Break-Out Boxes on page 31.
- All safety precautions described in the documentation of the connected devices.

Where to go from here

Information in this section

Introduction to RapidPro Break-Out Boxes 557
Break-Out Boxes in Use 559
Data Sheets 568

Introduction to RapidPro Break-Out Boxes

Break-Out Box variants

dSPACE provides three RapidPro Break-Out Box variants, each of which is adapted to the front connectors of the respective RapidPro unit:

- RapidPro Break-Out Box for SC Unit
- RapidPro Break-Out Box for Power Unit
- RapidPro Break-Out Box for Control Unit

The variant name is printed on the top.

Where to go from here

Information in this section

Feature Overview 557

Components and Functionality 558

Feature Overview

Main features

- Easy to connect in series to an already existing cable harness to check and/or reconnect signals without changing the already existing cable harness
- Test plug(s) and/or stripped wire(s) can be connected on up to 6 points on each terminal
- One terminal for each signal of the RapidPro unit's front connectors
- Terminals are labeled according to the signals of the connected RapidPro unit
- Multicolor LED for each terminal to indicate the signal status. The LED indication can be adapted to different input voltages. The connected signals are not affected.
- Signal quality is not affected, because the measuring paths on the Break-Out Boxes have a very high impedance.
- Knife disconnector for each terminal to break the signal path
- 2 connection cables per delivered Break-Out Box for the connection to a RapidPro unit

More features

For a complete list of all features, refer to RapidPro Break-Out Boxes Data Sheets on page 568.

Components and Functionality

Schematic overview

The following illustration shows the functional units of a Break-Out Box.

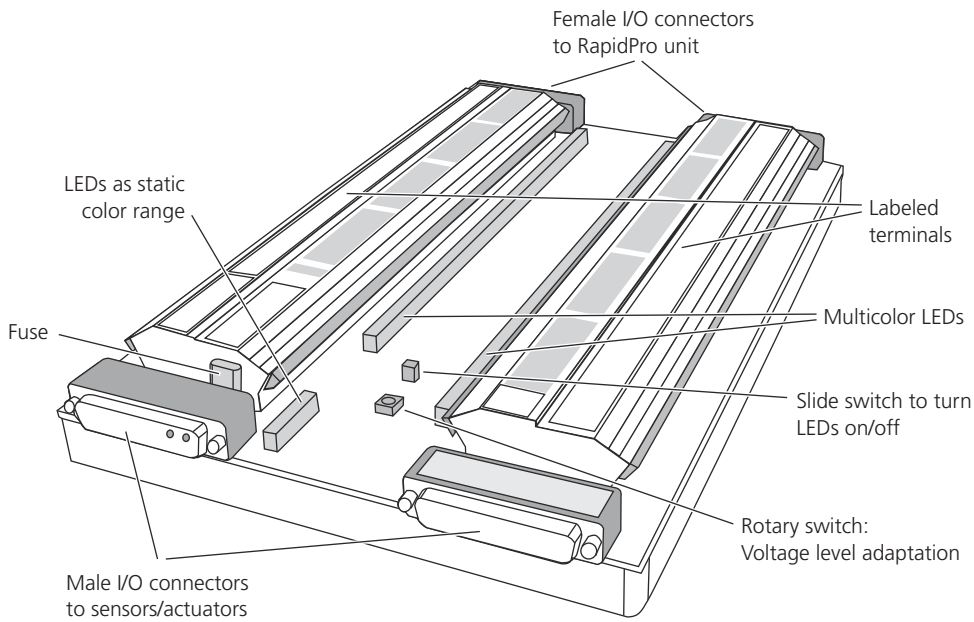

Block diagram

The block diagram shows the functional units and their interrelations in simplified form. More detailed descriptions of the components are given if their functions are not clear from the block diagram.

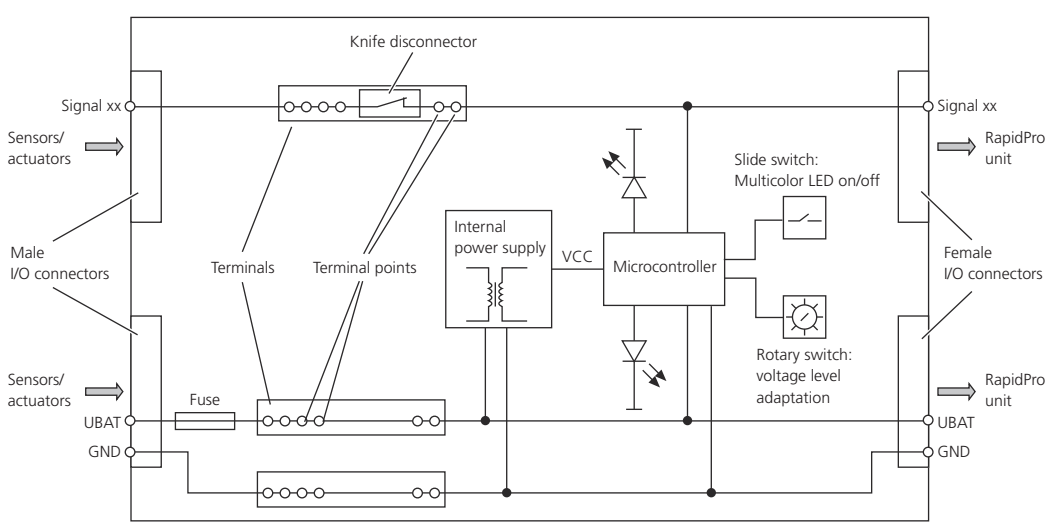

Fuse for the UBAT connection

The UBAT connection of a Break-Out Box is protected by a replaceable blade type automotive fuse (Break-Out Box for Power Unit: 2 fuses). For details, refer to RapidPro Break-Out Boxes Data Sheets on page 568.

Knife disconnector

Each signal terminal provides a switch, called a knife disconnector. This is to interrupt the signal between the cable harness and the RapidPro unit. For details, refer to Working Principles on page 562.

Status indication via LEDs

Multicolor LEDs The Break-Out Boxes provide a multicolor LED for each UBAT and signal terminal to indicate different voltage levels by different colors controlled by a microcontroller.

Slide switch to turn all multicolor LEDs on/off You can switch all LEDs off with the slide switch to reduce the power consumption of the Break-Out Boxes.

Rotary switch to adapt the multicolor LEDs to different voltage levels You can adapt the color indication of the multicolor LEDs to the voltage levels of the power supply. For details, refer to Adapting the LED Indication to the Power Supply on page 560.

LEDs as a static color range There are LEDs which are lit permanently as a static color range, if the Break-Out Box is connected to the power supply.

Connecting RapidPro units

dSPACE delivers connection cables with each Break-Out Box to connect RapidPro units. The cables are a 1 to 1 connection of all signal, UBAT, and GND pins.

Following cables come with the Break-Out Boxes:

- Break-Out Box for SC Unit
  2x RPBOB_CAB2
- Break-Out Box for Power Unit
  2x RPBOB_CAB3
- Break-Out Box for Control Unit
  1x RPBOB_CAB4
  1x RPBOB_CAB2

Break-Out Boxes in Use

Objective

To make the most efficient use of the Break-Out Boxes, you should note the following information.

Where to go from here

Information in this section

Adapting the LED Indication to the Power Supply..... 560
Working Principles..... 562
Connecting Examples..... 566

Adapting the LED Indication to the Power Supply

Objective

Each RapidPro Break-Out Box provides a number of multicolor LEDs, one LED per signal. The LEDs indicate different voltage ranges of the power supply by different colors.

Sensitivity of the LEDs

The color indication of the LEDs is not designed for precise measurement. The color can be affected by the characteristics of the signal types such as:

- PWM signals with very fast rising or falling edges
- Small voltage signals
- High-frequency signals
- AC signals whose high and low levels correspond to the thresholds of the colors red and green. In this case the LED is yellow.

LED indication range

You can set the indication range of the LEDs according to your connected external power supply to indicate voltage fluctuations, and missing and/or incorrect signals by different colors. The following table shows which LED color indicates which voltage subrange:

Color	Range 3	Range 2	Range 1	Range 0
Red	> 12.5 V	> 50 V	> 100 V	> 200 V
Orange	4.5 ... 12.5 V	19 ... 50 V	38 ... 100 V	76 ... 200 V
Yellow	1.75 ... 4.5 V	7 ... 19 V	14 ... 38 V	28 ... 76 V
Light green	0.5 ... 1.75 V	3 ... 7 V	6 ... 14 V	12 ... 28 V
Green	0.25 ... 0.5 V	1 ... 3 V	2 ... 6 V	4 ... 12 V
No color (off)	0 ... 0.25 V	0 ... 1 V	0 ... 2 V	0 ... 4 V

Tip

You should choose the range (Ranges 3 ... 0) such that the value of the supply voltage is within the yellow subrange. Otherwise, the LED color indication is restricted to only part of the range, thus losing accuracy.

Switching the LED indication range

Every Break-Out Box provides a rotary switch to switch between the main ranges (Ranges 3 ... 0). The following table shows the switch positions according to the main ranges:

Switch Position	Main Range
0	0
1	1
2	2
3	3
4	0
5	1
6	2
7	3
8	0
9	1
A	2
B	3
C	0
D	1
E	2
F	3

To locate the rotary switch on the Break-Out Box, refer to Schematic overview on page 558.

Related topics

Basics

Powering a RapidPro System with Connected Break-Out Boxes (RapidPro System Hardware Installation Guide 🕮)

Working Principles

Objective

You can connect signals to the terminal points of the Break-Out Boxes either with test plugs or with stripped wires. The signal paths can be interrupted via the knife disconnectors without disconnecting a test plug or wire.

Safety precautions

⚠ WARNING

Risk of serious injury or death due to electric shock

Dangerous voltages can be on the contacts, depending on:

- Your power supply
- The output currents of specific modules
- The output voltages of specific modules such as the PS-DINJ 2/1 module (DS1664)
- Failures

Do not touch bare contacts.

⚠ WARNING

Risk of serious injury or death

Changing the already existing cable harness via Break-Out Box can cause uncontrolled movements and/or damage to connected devices.

- Before changing the cabling, think through the effects of the changes you are planning.
- Ensure that no one is in the potential danger zone of the device (test bench, etc.) when the changes first take effect.

⚠ CAUTION

Connected components can cause fire

The RapidPro hardware provides electrical energy at the I/O pins, which can cause a fire if external components such as sensors/actuators are not appropriately connected. This particularly concerns output pins of modular boards that provide internal voltages to supply external components.

- To prevent a fire, apply the general fire safety regulations, e.g., supervise the operation, remove fire loads, and use fire-proof materials and enclosures.

Signal flow between the I/O connectors

The following illustration shows which terminal points are assigned to which I/O connector if a knife disconnector breaks a signal path:

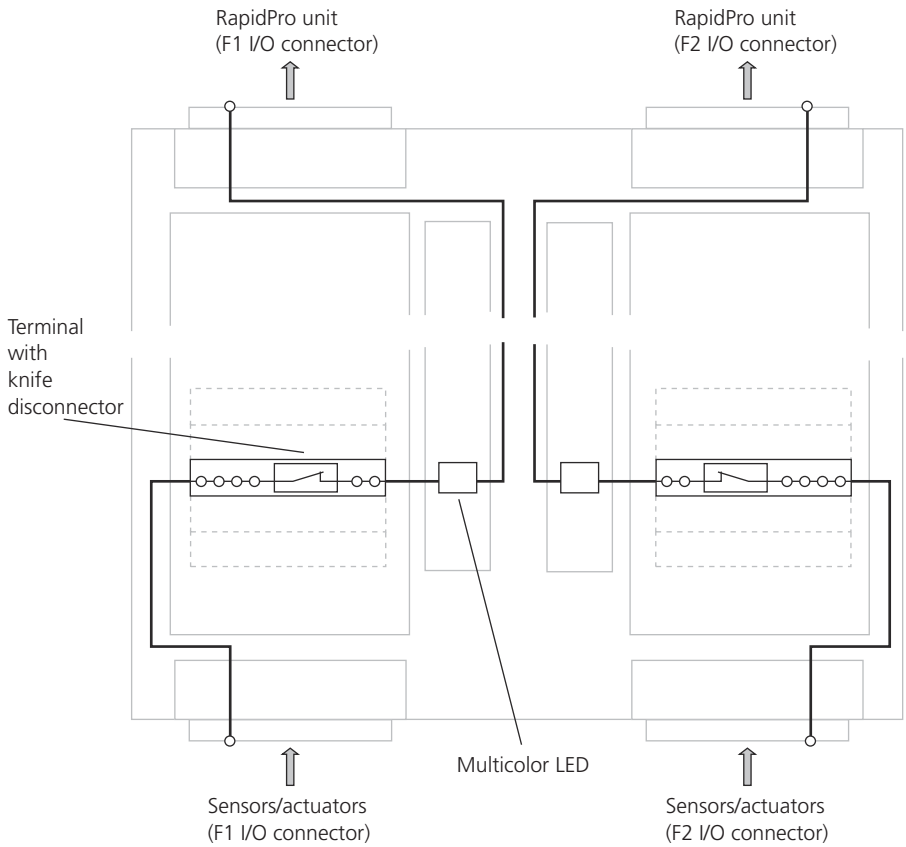

Connecting/disconnecting stripped wires

Depending on the terminal type, an internal or an external release mechanism lets you connect/disconnect stripped wires.

Internal release mechanism Put the delivered release tool into the squared hole and push the spring-cage connection release mechanism sidewards as shown in the illustration below:

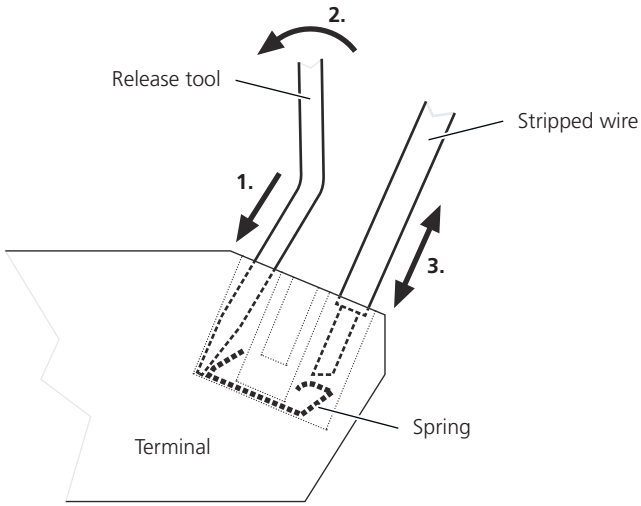

Tip

You can also use a 3 mm (0.12 in.) slotted screwdriver to release the spring-cage connection release mechanism.

External release mechanism Push down the spring-cage connection release mechanism to connect or disconnect the stripped end of a single wire as shown in the illustration below:

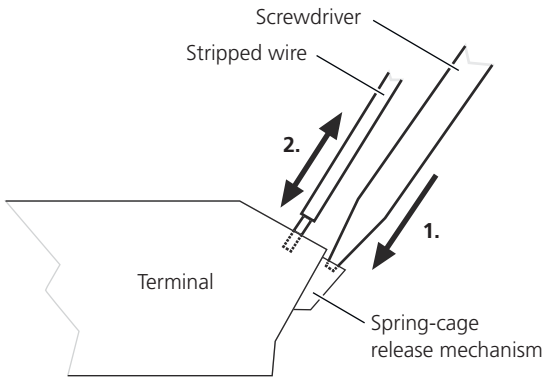

Note

Use a 3 mm (0.12 in.) slotted screwdriver to push down the spring-cage connection release mechanism.

Wire dimensions The spring-cage connection supports cable dimensions in the range AWG16 ... AWG24, as shown in the following table:

AWG[1)]	Diameter		Cross-Section	
	mm	inch	mm^2	$inch^2$
16	1.29	0.05	1.3	0.002
24	0.511	0.02	0.205	0.0003

1) AWG = American Wire Gauge

Connecting test plugs

You can connect the terminals with test plugs (banana plugs) that have a metal pin of 2.0 mm (0.08 in.) diameter.

Interrupting the signal path

Each terminal provides a knife disconnector to interrupt a signal path, for example, for measuring purposes. The following illustration shows how to open a knife disconnector:

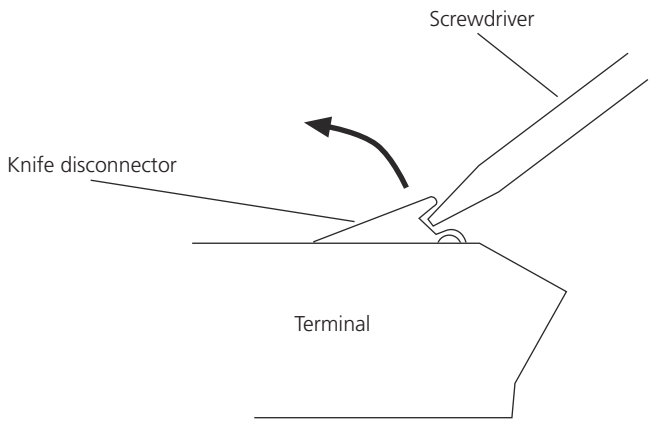

Tip

Use a 3 mm (0.12 in.) slotted screwdriver to lift the knife disconnector.

Note

Move the knife disconnector to its upper position until it locks in place to ensure signal interruption.

Related topics

Basics

Powering a RapidPro System with Connected Break-Out Boxes (RapidPro System Hardware Installation Guide 🕮)

Connecting Examples

Changing signal paths

You can change signal paths if you open the knife disconnectors of the signal terminals and reconnect the signals with test plugs or wires, as shown in the illustration below:

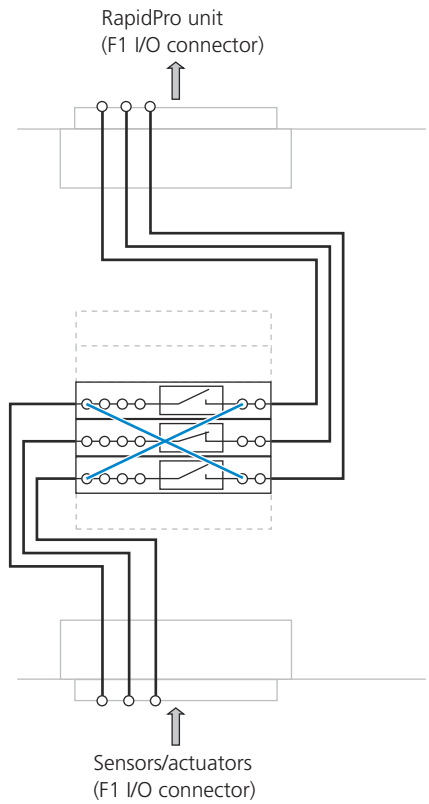

Current measuring

Open the knife disconnector of a signal terminal and connect an ampere meter for current measuring, as shown in the illustration below:

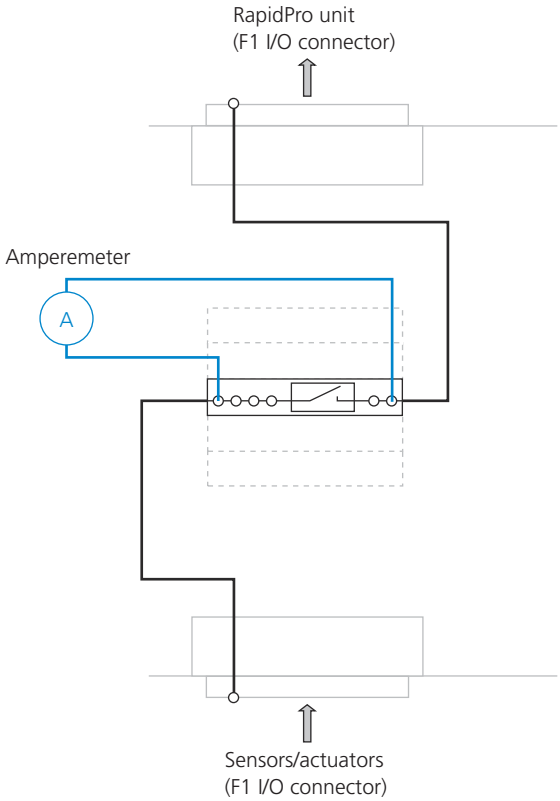

Related topics

Basics

Powering a RapidPro System with Connected Break-Out Boxes (RapidPro System Hardware Installation Guide 🕮)

Data Sheets

RapidPro Break-Out Boxes Data Sheets

Technical data

Parameter		Specification [1]
General		▪ Three variants for different RapidPro units: ▪ DS1687: Break-Out Box for SC Unit ▪ DS1688: Break-Out Box for Power Unit ▪ DS1689: Break-Out Box for Control Unit ▪ I/O Connectors: ▪ For connection to RapidPro units ▪ For connection to an already existing cable harness ▪ Each Break-Out Box provides the same number of terminals as the connected unit: ▪ Up to 6 terminal points for each signal ▪ Knife disconnectors to interrupt the signal path ▪ LED indication - one multicolor LED for each signal path: ▪ To indicate signal status ▪ Indication adjustable to different voltages ▪ Slide switch to turn all LEDs on/off
Connection cables	Break-Out Box for SC Unit	▪ 2 cables (RPBOB_CAB2) to connect to the front I/O connectors (F1/F2) of a SC Unit
	Break-Out Box for Power Unit	▪ 2 cables (RPBOB_CAB3) to connect to the front I/O connectors (F1/F2) of a Power Unit
	Break-Out Box for Control Unit	▪ 1 cable (RPBOB_CAB4) to connect to the F1 front I/O connector of a Control Unit ▪ 1 cable (RPBOB_CAB2) to connect to the F2 front I/O connector of a Control Unit
Electrical characteristics	Power supply	▪ +6 V … +54 V DC [2] ▪ MINI® Fuse (blade type automotive fuse): ▪ 1x 10 A (Break-Out Box for SC Unit)

Parameter		Specification [1]
		▪ 2x 30 A (Break-Out Box for Power Unit) ▪ 1x 5 A or 1x 10 A (Break-Out Box for Control Unit)
	Load dump protection	Up to 100 V
	Reverse voltage protection	Up to –100 V
	Power consumption (all LEDs on)	Approx. 22 W
	Power consumption (all LEDs off)	Approx. 2 W
Mechanical characteristics	Physical size 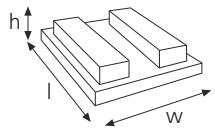	▪ l: 356 mm (14 in.) ▪ w: 224 mm (8.8 in.) ▪ h: 50 mm (1.95 in.)
	Weight	Approx. 2.4 kg (5.3 lb.)
Environmental conditions	Operating temperature	0 … +70 °C (+32 … +158 °F)

[1] Unless stated otherwise, the specifications are valid only if the dSPACE hardware is correctly powered, switched on, and ready for operation.
[2] With an additional absolute maximum tolerance of +6 V.

Connection Cables

Where to go from here

Information in this section

Ethernet Connection Cables.....570
High Current Cable.....573
LVDS Link Cables.....575
RapidPro Break-Out Box Connection Cables.....576
Thermocouple Cables.....579
USB Connection Cables.....581

Ethernet Connection Cables

Where to go from here

Information in this section

ETH_CAB2 Ethernet Connection Cable.....570
To connect a MicroAutoBox II/III or a DCI-GSI2 to hardware with an RJ45 connector electrically safe up to 300 V DC/AC_{RMS} and 600 V_{peak}.

ETH_CAB4 Ethernet Connection Cable.....572
To connect a MicroAutoBox II/III/Embedded PC or a DCI-GSI2 to hardware with an RJ45 connector.

HSL_PATCH_300V Galvanically Isolated PC Connection Cable.....572
To connect the host PC to an ECU with XCP on Ethernet, to MicroLabBox, or to an expansion box (for example, PX10 with DS814 link board, AutoBox with DS1007 PPC Processor Board).

ETH_CAB2 Ethernet Connection Cable

Technical data

Up to revision CB1401C-02-xxx The revision number is written on the cable's label. The following table shows the technical specifications of the galvanically isolated connection cable:

Parameter	Specification[1]		
Purpose	To connect a MicroAutoBox II/III or a DCI-GSI2 to hardware with an RJ45 connector electrically safe up to 300 V DC/AC_{RMS} and 600 V_{peak}.		
Illustration			
Connector	RJ45 jack	Galvanic isolation	LEMO-1B, 8 pins
Label on the cable	ETH_CAB2		
Length	4.5 m (177.2 in.)		
Electrical characteristics	Electrically safe up to 300 V DC/AC_{RMS} and 600 V_{peak}[2]		
Operating temperature	-40 … +85 °C (-40 … +185 °F)		
Max. transfer rate	100 Mbit/s [3]		

[1] Unless stated otherwise, the specifications are valid only if the dSPACE hardware is correctly powered, switched on, and ready for operation.
[2] The voltage levels relate to secondary circuits without direct electrical connection to the AC mains.
[3] In exceptional cases, auto-negotiation of connected Gigabit devices (e.g., the host PC) does not lead to a stable Ethernet connection. To solve the problem, manually reduce the Ethernet transfer rate of the host PC to 100 Mbit/s.

As of revision CB1401C-03-xxx The revision number is written on the label of the cable. The following table shows the technical specifications of the galvanically isolated connection cable:

Parameter	Specification[1]		
Purpose	To connect a MicroAutoBox II/III or a DCI-GSI2 to hardware with an RJ45 connector electrically safe up to 300 V DC/AC_{RMS} and 600 V_{peak}.		
Illustration			
Connector	RJ45 jack	Galvanic isolation	LEMO-1B, 8 pins
Label on the cable	ETH_CAB2		
Length	4.5 m (177.2 in.)		
Electrical characteristics	Electrically safe up to 300 V DC/AC_{RMS} and 600 V_{peak}[2]		
Operating temperature	–40 … +85 °C (–40 … +185 °F)		
Max. transfer rate	1 Gbit/s		

[1] Unless stated otherwise, the specifications are valid only if the dSPACE hardware is correctly powered, switched on, and ready for operation.
[2] The voltage levels relate to secondary circuits without direct electrical connection to the AC mains.

ETH_CAB4 Ethernet Connection Cable

Technical data

The following table shows the technical specifications of the cable:

Parameter	**Specification**[1]		
Purpose	To connect a MicroAutoBox II/III/Embedded PC or a DCI-GSI2 to hardware with an RJ45 connector.		
Illustration	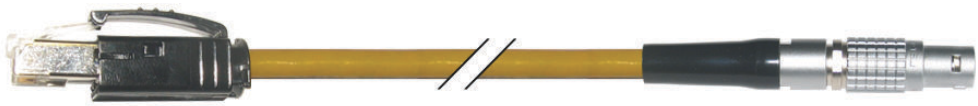		
Connector	RJ45 jack		LEMO-1B, 8 pins
Label on the cable	ETH_CAB4		
Length	10 m (394 in.)		
Operating temperature	-40 … +85 °C (-40 … +185 °F)		
Max. transfer rate	1 Gbit/s		

[1] Unless stated otherwise, the specifications are valid only if the dSPACE hardware is correctly powered, switched on, and ready for operation.

HSL_PATCH_300V Galvanically Isolated PC Connection Cable

Technical data

The following table shows the technical specifications of the galvanically isolated connection cable:

Parameter	**Specification**[1]		
Purpose	To connect the host PC to an ECU with XCP on Ethernet, to MicroLabBox, or to an expansion box (for example, PX10 with DS814 link board, AutoBox with DS1007 PPC Processor Board).		
Illustration			
Connector	RJ45 jack	Galvanic isolation	RJ45 jack
Label on the cable	HSL_PATCH_300V		
Length	4.5 m (177.2 in.)		
Electrical characteristics	Electrically safe up to 300 V DC/AC_{RMS} and 600 V_{peak}[2]		
Operating temperature	-40 … +85 °C (-40 … +185 °F)		
Max. transfer rate	100 Mbit/s [3]		

[1] Unless stated otherwise, the specifications are valid only if the dSPACE hardware is correctly powered, switched on, and ready for operation.

Parameter	Specification[1)]

[2)] The voltage levels relate to secondary circuits without direct electrical connection to the AC mains.

[3)] In exceptional cases, auto-negotiation of connected Gigabit devices (e.g., the host PC) does not lead to a stable Ethernet connection. To solve the problem, manually reduce the Ethernet transfer rate of the host PC to 100 Mbit/s.

Related topics

Basics

Safety Precautions for Using the PS-DINJ 2/1 Module.....27

High Current Cable

Where to go from here

Information in this section

RP_HC_CAB1 Power/Load Cable.....573
To connect a RapidPro Power Unit including PS-HCHBD and/or PS-HCFBD modules to power supply and load.

RP_HC_CAB1 Power/Load Cable

Technical data

The following table shows the technical specifications of the RP_HC_CAB1 power/load cable:

Parameter	Specification [1)]
Purpose	To connect a RapidPro Power Unit including PS-HCHBD and/or PS-HCFBD modules to power supply and load (use case: connection of AC motors).

Parameter	Specification [1]		
Illustration	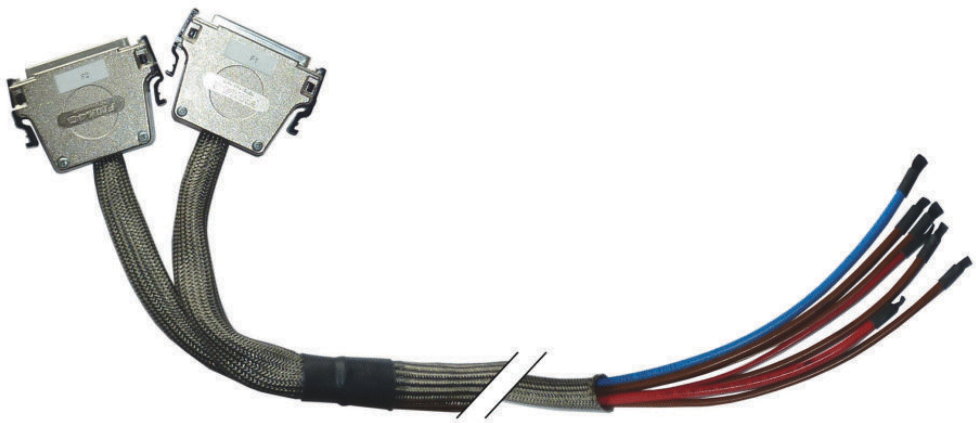		
Connector	2 x female Sub-D connector with 25 signal and two high-current pins	–	7 x litz wire
Length	2.5 m (98.43 in.)		
Electrical characteristics	35 A @ ambient temperature 60 °C (140 F) (current value valid only for the AWG10 wires)		
Operating temperature	–30 … +85 °C (–22 … +185 °F) The lower temperature range is valid only if the cable is not moved.		

[1] Unless stated otherwise, the specifications are valid only if the dSPACE hardware is correctly powered, switched on, and ready for operation.

⚠ WARNING

Only PS HCFBD or PS HCHBD modules are allowed to be installed in the RapidPro Power Unit if this cable is connected. Otherwise module I/O pins can be shorted. For further information on wiring, refer to Connecting a Power Unit to Power Supply (RapidPro System Hardware Installation Guide 🕮).

Pinout The following table shows the numbering used:

Sub-D I/O Connectors		Wire Marking	Color	AWG [1]	Diameter (mm)	Cross-Section (mm^2)
F1 Pins	F2 Pins					
A1	A1	GND	Blue	AWG10	2.59	5.26
A2	A2	UBAT	Red			
1	—	KL15	Red	AWG18	1.024	0.823
2 … 13	—	F1-HCHB1	Brown	AWG10	2.59	5.26
14 … 25	—	F1-HCHB2	Brown			
—	2 … 13	F2-HCHB1	Brown			
—	14 … 25	F2-HCHB2	Brown			

[1] AWG = American Wire Gauge

Note

The wire marking refers to the use of a PS-HCHBD 2/1 (DS1668), resp. a PS-HCHBD 2/2 module (DS1768). Furthermore, the RP_HC_CAB1 Power/Load Cable can be used with PS-HCFBD modules.

The following illustration shows the wire marking on the example of the GND wire:

Tip

The shrink sleeves at the end of each wire are for your protection.

LVDS Link Cables

Where to go from here

Information in this section

LVDS_CAB2 LVDS Link Cable 575
To connect two devices with LEMO-1S connectors via LVDS.

LVDS_CAB3 LVDS Link Cable 576
To connect two devices with LEMO-1S connectors via LVDS.

LVDS_CAB2 LVDS Link Cable

Technical data

The following table shows the technical specifications of the LVDS_CAB2 LVDS link cable:

Parameter	**Specification**[1)]		
Purpose	To connect two devices with LEMO-1S connectors via LVDS.		
Illustration			
Connector	LEMO-1S, 4 pins (2 male, 2 female)	–	LEMO-1S, 4 pins (2 male, 2 female)

Parameter	Specification[1)]
Label on the cable	LVDS_CAB2
Length	5.0 m (197 in.)
Operating temperature	–20 … +60 °C (–4 … +140 °F)

[1)] Unless stated otherwise, the specifications are valid only if the dSPACE hardware is correctly powered, switched on, and ready for operation.

LVDS_CAB3 LVDS Link Cable

Technical data

The following table shows the technical specifications of the LVDS_CAB3 LVDS link cable:

Parameter	Specification[1)]		
Purpose	To connect two devices with LEMO-1S connectors via LVDS.		
Illustration			
Connector	LEMO-1S, 4 pins (2 male, 2 female)	–	LEMO-1S, 4 pins (2 male, 2 female)
Label on the cable	LVDS_CAB3		
Length	5.0 m (197 in.)		
Operating temperature	–40 … +150 °C (–40 … +302 °F)		

[1)] Unless stated otherwise, the specifications are valid only if the dSPACE hardware is correctly powered, switched on, and ready for operation.

RapidPro Break-Out Box Connection Cables

Where to go from here

Information in this section

RPBOB_CAB2 Break-Out Box Connection Cable for SC Unit/Control Unit 577

- To connect the Break-Out Box for SC Unit (DS1687) to the SC Unit (F1 and F2 connector).
- To connect the Break-Out Box for Control Unit (DS1689) to the Control Unit (only F2 connector).

RPBOB_CAB3 Break-Out Box Connection Cable for Power Unit..... 578
To connect the Break-Out Box for Power Unit (DS1688) to the Power Unit (F1 and F2 connector).

RPBOB_CAB4 Break-Out Box Connection Cable for Control Unit..... 578
To connect the Break-Out Box for Control Unit (DS1689) to the Control Unit (only F1 connector).

RPBOB_CAB2 Break-Out Box Connection Cable for SC Unit/Control Unit

Technical data

The following table shows the technical specifications of the RPBOB_CAB2 Break-Out Box connection cable:

Parameter	**Specification** [1]		
Purpose	▪ To connect the Break-Out Box for SC Unit (DS1687) to the SC Unit (F1 and F2 connector). ▪ To connect the Break-Out Box for Control Unit (DS1689) to the Control Unit (only F2 connector).		
Illustration	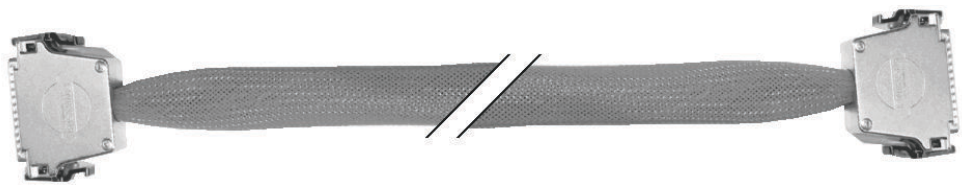		
Connector	Female Sub-D connector with 50 signal pins	–	Male Sub-D connector with 50 signal pins
Length	0.5 m (19.7 in.)		
Operating temperature	0 … +70 °C (+32 … +158 °F)		

[1] Unless stated otherwise, the specifications are valid only if the dSPACE hardware is correctly powered, switched on, and ready for operation.

RPBOB_CAB3 Break-Out Box Connection Cable for Power Unit

Technical data

The following table shows the technical specifications of the RPBOB_CAB3 Break-Out Box connection cable:

Parameter	**Specification** [1]		
Purpose	To connect the Break-Out Box for Power Unit (DS1688) to the Power Unit (F1 and F2 connector).		
Illustration	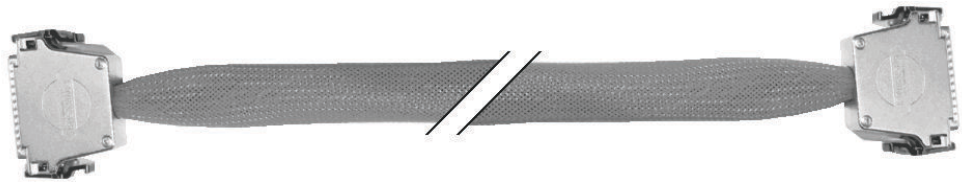		
Connector	Female Sub-D connector with 25 signal and two high-current pins	–	Male Sub-D connector with 25 signal and two high-current pins
Length	0.5 m (19.7 in.)		
Operating temperature	0 … +70 °C (+32 … +158 °F)		

[1] Unless stated otherwise, the specifications are valid only if the dSPACE hardware is correctly powered, switched on, and ready for operation.

RPBOB_CAB4 Break-Out Box Connection Cable for Control Unit

Technical data

The following table shows the technical specifications of the RPBOB_CAB4 Break-Out Box connection cable:

Parameter	**Specification** [1]		
Purpose	To connect the Break-Out Box for Control Unit (DS1689) to the Control Unit (only F1 connector).		
Illustration	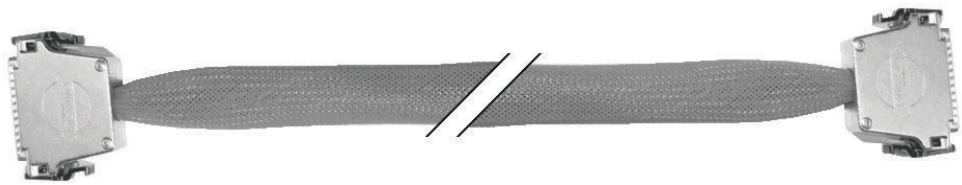		
Connector	Female Sub-D connector with 41 signal and two high-current pins	–	Male Sub-D connector with 41 signal and two high-current pins
Length	0.5 m (19.7 in.)		
Operating temperature	0 … +70 °C (+32 … +158 °F)		

[1] Unless stated otherwise, the specifications are valid only if the dSPACE hardware is correctly powered, switched on, and ready for operation.

Thermocouple Cables

Where to go from here

Information in this section

RP_THM_CAB1 Splitter Cable (Type K)..... 579
To connect up to 8 thermocouples of type K (NiCr-Ni) to a RapidPro system with installed SC-TC 8/1 (DS1638).

RP_THM_CAB2 Splitter Cable (Type J)..... 580
To connect up to 8 thermocouples of type J (Fe-CuNi) to a RapidPro system with installed SC-TC 8/1 (DS1638).

RP_THM_CAB1 Splitter Cable (Type K)

Technical data

The following table shows the technical specifications of the RP_THM_CAB1 splitter cable:

Parameter	**Specification** [1)]		
Purpose	To connect up to 8 thermocouples of type K (NiCr-Ni) to a RapidPro system with installed SC-TC 8/1 (DS1638).		
Illustration	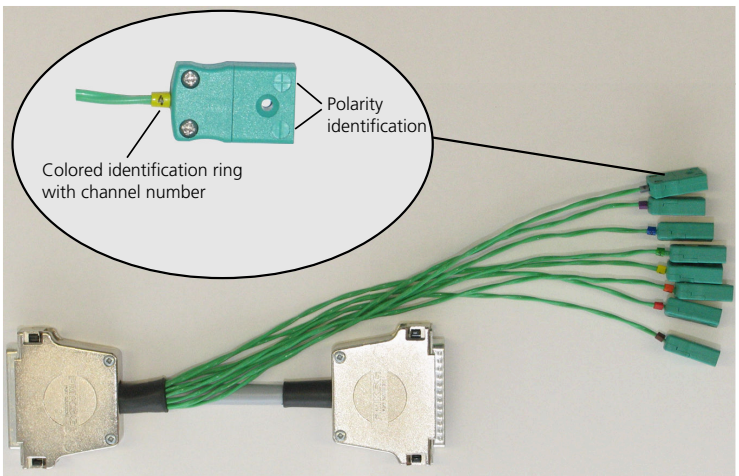		
Connector	▪ Female Sub-D connector with 50 signal pins ▪ Integrated PT1000 temperature sensors for cold junction compensation on the SC-TC 8/1 module ▪ Built as isothermal block	–	▪ Male Sub-D connector with 22 signal pin ▪ 8 two-pin thermo plugs (numbered and color-coded via identification rings) with NiCr-Ni cable to the Sub-D connector
Length	▪ Sub-D to Sub-D: 0.1 m (3.93 in.)		

Channel	*Color*
8	Grey
7	Violet
6	Blue
5	Green
4	Yellow
3	Orange
2	Red
1	Brown

Parameter	Specification [1]
	▪ Sub-D to thermo plugs: 0.3 m (11.8 in.)
Operating temperature	–40 … +85 °C (–40 … +185 °F)

[1] Unless stated otherwise, the specifications are valid only if the dSPACE hardware is correctly powered, switched on, and ready for operation.

RP_THM_CAB2 Splitter Cable (Type J)

Technical data

The following table shows the technical specifications of the RP_THM_CAB2 splitter cable:

Parameter	Specification [1]		
Purpose	To connect up to 8 thermocouples of type J (Fe-CuNi) to a RapidPro system with installed SC-TC 8/1 (DS1638).		
Illustration	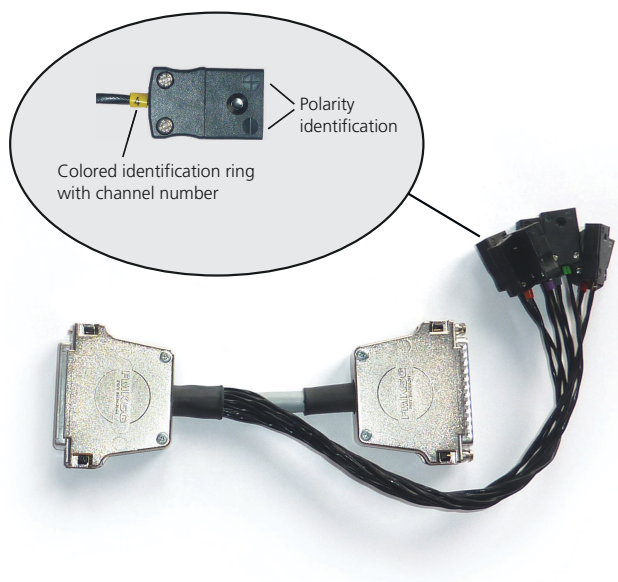 *Channel* / *Color*: 8 Grey; 7 Violet; 6 Blue; 5 Green; 4 Yellow; 3 Orange; 2 Red; 1 Brown		
Connector	▪ Female Sub-D connector with 50 signal pins ▪ Integrated PT1000 temperature sensors for cold junction compensation on the SC-TC 8/1 module ▪ Built as isothermal block	–	▪ Male Sub-D connector with 22 signal pin ▪ 8 two-pin thermo plugs (numbered and color-coded via identification rings) with Fe-CuNi cable to the Sub-D connector
Length	▪ Sub-D to Sub-D: 0.1 m (3.93 in.)		

Parameter	Specification [1]
	▪ Sub-D to thermo plugs: 0.3 m (11.8 in.)
Operating temperature	–40 … +85 °C (–40 … +185 °F)

[1] Unless stated otherwise, the specifications are valid only if the dSPACE hardware is correctly powered, switched on, and ready for operation.

USB Connection Cables

Where to go from here

Information in this section

USB_CAB1 Active USB Extension Cable 582
To allow USB connections longer than 5 meters, e.g., to the Calibration Hub.

USB_CAB4 Interface Cable with Optoisolation 582
To connect a RapidPro system used as prototyping ECU (for systems featuring voltages up to 60 V DC and 30 V AC_{RMS}) to the host PC.

USB_CAB5 PC Connection Cable 583
To connect a USB_CAB4 or USB_CAB11 interface cable, or a USB_CAB1 cable to a free USB (type A) jack on your host PC.

USB_CAB6 PC Connection Cable for Calibration Hub/RapidPro 584
To connect a Calibration Hub, or a RapidPro system used as intelligent I/O subsystem to a free USB (type A) jack on your host PC (for systems featuring voltages up to 60 V DC and 30 V AC_{RMS} / 42.4 V AC_{peak}).

USB_CAB12 PC Connection Cable for Calibration Hub/RapidPro 584
To connect a Calibration Hub, or a RapidPro system used as intelligent I/O subsystem to a free USB (type A) jack of your host PC (electrically safe up to 300 V DC/AC_{RMS} and 600 V_{peak}).

USB_CAB1 Active USB Extension Cable

Technical data

The following table shows the technical specifications of the USB_CAB1 active USB extension cable:

Parameter	Specification[1]		
Purpose	To allow USB connections longer than 5 meters, e.g., to the Calibration Hub.		
Illustration			
Connector	LEMO-1B, male, 4 pins (blue)		LEMO-1B, female, 4 pins (blue)
Label on the cable	USB_CAB1		
Length	5.0 m (197 in)		
Operating temperature	Cable: –50 … +150 °C (–58 … +302 °F) Active USB extension: –40 … +85 °C (–40 … +185 °F)		

[1] Unless stated otherwise, the specifications are valid only if the dSPACE hardware is correctly powered, switched on, and ready for operation.

USB_CAB4 Interface Cable with Optoisolation

Technical data

The following table shows the technical specifications of the USB_CAB4 interface cable with optoisolation (DS861):

Parameter	Specification[1]		
Purpose	To connect a RapidPro system used as prototyping ECU (for systems featuring voltages up to 60 V DC and 30 V AC_{RMS}) to the host PC. [2] **Note** For RapidPro systems: You need the USB_CAB5 cable with its USB plug (or USB_CAB5 with USB_CAB1) to connect the RapidPro system to a free USB (type A) jack on your host PC.		
Illustration			
Connector	LEMO-1B, male, 4 pins (blue)	(Optoisolation)	LEMO-1B, male, 4 pins (green)
Label on the cable	USB_CAB4		
Length	3.5 m (138 in)		
Electrical characteristics	For systems featuring voltages up to 60 V DC and 42.4 V AC_{peak}		

Parameter	Specification[1)]
Operating temperature	▪ Cable: –50 … +150 °C (–58 … +302 °F) ▪ Optoisolation: –40 … +85 °C (–40 … +185 °F)

1) Unless stated otherwise, the specifications are valid only if the dSPACE hardware is correctly powered, switched on, and ready for operation.

2) For RapidPro systems: If the system is used as a prototyping ECU, the Control Unit must be equipped with the COM module COM-USB-PI 1/1 (DS1607).

USB_CAB5 PC Connection Cable

Technical data

The following table shows the technical specifications of the USB_CAB5 PC connection cable:

Parameter	Specification[1)]		
Purpose	To connect a USB_CAB4 or USB_CAB11 interface cable, or a USB_CAB1 cable to a free USB (type A) jack on your host PC.		
Illustration			
Connector	USB, 4 pins		LEMO-1B, female, 4 pins (blue)
Label on the cable	USB_CAB5		
Length	0.3 m (11.8 in)		
Operating temperature	–40 … +85 °C (–40 … +185 °F)		

1) Unless stated otherwise, the specifications are valid only if the dSPACE hardware is correctly powered, switched on, and ready for operation.

Related topics

References

USB_CAB4 Interface Cable with Optoisolation 582

USB_CAB6 PC Connection Cable for Calibration Hub/RapidPro

Technical data

The following table shows the technical specifications of the USB_CAB6 PC connection cable for Calibration Hub/RapidPro:

Parameter	**Specification**[1]		
Purpose	To connect a Calibration Hub, or a RapidPro system used as intelligent I/O subsystem to a free USB (type A) jack on your host PC (for systems featuring voltages up to 60 V DC and 30 V AC_{RMS} / 42.4 V AC_{peak}).[2]		
Illustration			
Connector	USB, 4 pins		LEMO-1B, male, 4 pins (yellow)
Label on the cable	USB_CAB6		
Length	3.0 m (118 in)		
Electrical characteristics	For systems featuring voltages up to 60 V DC and 30 V AC_{RMS} / 42.4 V AC_{peak}		
Operating temperature	–40 … +85 °C (–40 … +185 °F)		

[1] Unless stated otherwise, the specifications are valid only if the dSPACE hardware is correctly powered, switched on, and ready for operation.

[2] For RapidPro systems: If the system is used as intelligent I/O subsystem, the Control Unit must be equipped with the COM module COM-USB-CI 1/1 (DS1609).

USB_CAB12 PC Connection Cable for Calibration Hub/RapidPro

Technical data

The following table shows the technical specifications of the USB_CAB12 PC connection cable for Calibration Hub/RapidPro:

Parameter	**Specification**[1]		
Purpose	To connect a Calibration Hub, or a RapidPro system used as intelligent I/O subsystem to a free USB (type A) jack of your host PC (electrically safe up to 300 V DC/AC_{RMS} and 600 V_{peak}).[2]		
Illustration			
Connector	USB, 4 pins	(Optoisolation)	LEMO-1B, male, 4 pins (yellow)
Label on the cable	USB_CAB12		
Length	4.5 m (177 in)		
Electrical characteristics	Electrically safe up to 300 V DC/AC_{RMS} and 600 V_{peak}[3]		

Parameter	Specification[1)]
Operating temperature	▪ Cable (device side): –50 … +150 °C (–58 … +302 °F) ▪ Cable (PC side) and optoisolation: –40 … +85 °C (–40 … +185 °F)

1) Unless stated otherwise, the specifications are valid only if the dSPACE hardware is correctly powered, switched on, and ready for operation.

2) For RapidPro systems: If the system is used as intelligent I/O subsystem, the Control Unit must be equipped with the COM module COM-USB-CI 1/1 (DS1609).

3) The voltage levels relate to secondary circuits without direct electrical connection to the AC mains.

A

active USB extension cable 582

B

banana plug
  Break-Out Boxes 565
block diagram
  Break-Out Boxes 558
Break-Out Boxes
  banana plug 565
  block diagram 558
  knife disconnector 565
  main features 557
  schematic overview 558
  wire dimensions 565

C

COM module
  COM-LVDS 1/1 137
  COM-USB-CI 1/1 137
  COM-USB-PI 1/1 137
  Control Unit 137
COM-LVDS 1/1
  COM module 137
Common Program Data folder 20
communication module
  COM-LVDS 1/1 137
  COM-USB-CI 1/1 137
  COM-USB-PI 1/1 137
COM-USB-CI 1/1
  COM module 137
COM-USB-PI 1/1
  COM module 137
configuration template
  PS-DINJ 2/1 454
  PS-FBD 2/1 369
  PS-HCFBD 1/1 477
  PS-HCFBD 1/2 522
  PS-HCHBD 2/1 502
  PS-HCHBD 2/2 553
  PS-HSD 6/1 393
  PS-LSD 6/1 423
  SC-AI 10/1 201
  SC-AI 4/1 183
  SC-CCDI 6/1 280
  SC-DI 8/1 219
  SC-DO 8/1 235
  SC-DO 8/2 250
  SC-EGOS 2/1 299
  SC-KNOCK 4/1 313
  SC-SENS 4/1 261
  SC-TC 8/1 331
  SC-UHEGO 2/1 348
connection cable
  data sheets 570
  HSL_PATCH_300V 572
  LVDS_CAB2 (LVDS link cable) 575
  LVDS_CAB3 (LVDS link cable) 576
  PC connection cable (USB_CAB5) 583
  PC connection cable for Calibration Hub/RapidPro (USB_CAB6) 584
  RP_HC_CAB1 power/load cable 573
  RP_THM_CAB1 splitter cable 329
  RP_THM_CAB2 splitter cable 330
  RPBOB_CAB2 (Break-Out Box connection cable) 577
  RPBOB_CAB3 (Break-Out Box connection cable) 578
  RPBOB_CAB4 (Break-Out Box connection cable) 578
Control Unit
  COM module 137
  MC module 138
  pinout
    front I/O connector F1 157
    front I/O connector F2 160
  signal specification
    front I/O connector F1 158
    front I/O connector F2 161
  technical data 168
  unit features 132
crank-/camshaft module
  SC-CCDI 6/1 263

D

data sheet
  Active USB extension cable (USB_CAB1) 582
  Break-Out Box for Control Unit 568
  Break-Out Box for Power Unit 568
  Break-Out Box for SC Unit 568
  connection cables 570
  Control Unit 168
  Ethernet connection cable (ETH_CAB4) 572
  Ethernet connection cable ETH_CAB2 570
  Interface cable with optoisolation (USB_CAB4) 582
  Isolated PC Connection Cable 572
  LVDS_CAB2 (LVDS link cable) 575
  LVDS_CAB3 (LVDS link cable) 576
  PC connection cable (USB_CAB5) 583
  PC connection cable for Calibration Hub/RapidPro (USB_CAB12) 584
  PC connection cable for Calibration Hub/RapidPro (USB_CAB6) 584
  Power Unit 127
  PS-DINJ 2/1 453
  PS-FBD 2/1 367
  PS-HCFBD 1/1 475
  PS-HCFBD 1/2 519
  PS-HCHBD 2/1 500
  PS-HCHBD 2/2 550
  PS-HSD 6/1 391
  PS-LSD 6/1 421
  RP_HC_CAB1 power/load cable 573
  RP_THM_CAB1 splitter cable 329
  RP_THM_CAB2 splitter cable 330
  RPBOB_CAB2 (Break-Out Box connection cable) 577
  RPBOB_CAB3 (Break-Out Box connection cable) 578
  RPBOB_CAB4 (Break-Out Box connection cable) 578
  SC Unit 81
  SC-AI 10/1 200
  SC-AI 4/1 181
  SC-CCDI 6/1 279
  SC-DI 8/1 218
  SC-DO 8/1 234
  SC-DO 8/2 249
  SC-EGOS 2/1 298
  SC-KNOCK 4/1 312
  SC-SENS 4/1 259
  SC-TC 8/1 327
  SC-UHEGO 2/1 347
  thermocouple connection cable (type J) (RP_THMCAB2) 580
  thermocouple connection cable (type K) (RP_THMCAB1) 579
data sheets
  active USB extension cable 582
  interface cable with optoisolation 582
  PC connection cable for Calibration Hub/RapidPro (USB_CAB12) 584
diagnostic messages
  PS-DINJ 2/1 450
  PS-FBD 2/1 364
  PS-HCFBD 1/1 473
  PS-HCFBD 1/2 517
  PS-HCHBD 2/1 498
  PS-HCHBD 2/2 546
  PS-HSD 6/1 389
  PS-LSD 6/1 420
  SC-AI 10/1 199
  SC-DO 8/1 233
  SC-DO 8/2 244
  SC-EGOS 2/1 296
  SC-KNOCK 4/1 311
  SC-SENS 4/1 258
  SC-UHEGO 2/1 345
Documents folder 20
DS861 582

E

ETH_CAB2 570
ETH_CAB4 572
Ethernet connection cable (ETH_CAB2) 570
Ethernet connection cable ETH_CAB4 572

F

front panel
  Control Unit status LEDs 163
  Power Unit status LEDs 121
  SC Unit status LEDs 76
full-bridge driver
  PS-FBD 2/1 360

H

high-current, full-bridge driver
  PS-HCFBD 1/1 470
  PS-HCFBD 1/2 514

high-current, high-side driver
PS-HCHBD 2/1 493
PS-HCHBD 2/2 539
high-current, low-side driver
PS-HCHBD 2/1 494
PS-HCHBD 2/2 540
high-side driver
PS-FBD 2/1 361
high-side driver module
PS-HSD 6/1 371
high-side mode
SC-DO 8/2 241
HSL_PATCH_300V
technical data 572

I

I/O circuit
PS-DINJ 2/1 430
PS-FBD 2/1 353
PS-HCFBD 1/1 459
PS-HCFBD 1/2 507
PS-HCHBD 2/1 483
PS-HCHBD 2/2 527
PS-HSD 6/1 373
SC-AI 10/1 189
SC-AI 4/1 173
SC-CCDI 6/1 265
SC-DI 8/1 207
SC-DO 8/1 223
SC-DO 8/2 239
SC-EGOS 2/1 288
SC-KNOCK 4/1 302
SC-SENS 4/1 255
SC-TC 8/1 319
SC-UHEGO 2/1 336
interface cable with optoisolation 582

K

knife disconnector
Break-Out Boxes 565

L

lambda probe 285, 333
Local Program Data folder 20
low-side driver
PS-FBD 2/1 361
low-side driver module
PS-LSD 6/1 397
low-side mode
SC-DO 8/2 241
LVDS_CAB2 (LVDS link cable)
technical data 575
LVDS_CAB3 (LVDS link cable)
technical data 576

M

main features
Break-Out Boxes 557
PS-DINJ 2/1 429
PS-FBD 2/1 352
PS-HCFBD 1/1 458
PS-HCFBD 1/2 506
PS-HCHBD 2/1 482
PS-HCHBD 2/2 526
PS-HSD 6/1 372
PS-LSD 6/1 398
SC-AI 10/1 188
SC-AI 4/1 172
SC-CCDI 6/1 264
SC-DI 8/1 206
SC-DO 8/1 222
SC-DO 8/2 238
SC-EGOS 2/1 287
SC-KNOCK 4/1 302
SC-SENS 4/1 254
SC-TC 8/1 318
SC-UHEGO 2/1 335
MC module
Control Unit 138
MC-MPC565 1/1 138
MC-MPC565 1/1
MC module 138
module type code 40

P

PC connection cable (USB_CAB5)
technical data 583
PC connection cable for Calibration Hub/RapidPro 584
PC connection cable for Calibration Hub/RapidPro (USB_CAB6)
technical data 584
pinout
Control Unit
front I/O connector F1 157
front I/O connector F2 160
Power Unit
front I/O connector F1 111
front I/O connector F2 113
rear I/O connector R1 115
rear I/O connector R2 115
SC Unit
front I/O connector F1 66
front I/O connector F2 68
rear I/O connector R1 71
rear I/O connector R2 71
power stage module
PS-DINJ 2/1 427
PS-FBD 2/1 351
PS-HCFBD 1/1 457
PS-HCFBD 1/2 505
PS-HCHBD 2/1 481
PS-HCHBD 2/2 525
PS-HSD 6/1 371
PS-LSD 6/1 397
Power Unit
pinout
front I/O connector F1 111
front I/O connector F2 113
rear I/O connector R1 115
rear I/O connector R2 115
signal specification
front I/O connector F1 111
front I/O connector F2 114
rear I/O connector R1 115
rear I/O connector R2 115
technical data 127
unit features 86
PS module
suitable Power Unit slots 91
PS-DINJ 2/1
configuration template 454
diagnostic messages 450
I/O circuit 430
main features 429
power stage module 427
technical data 453
PS-FBD 2/1
configuration template 369
diagnostic messages 364
full-bridge driver 360
high-side driver 361
I/O circuit 353
low-side driver 361
main features 352
technical data 367
PS-HCFBD 1/1
configuration template 477
diagnostic messages 473
high-current, full-bridge driver 470
I/O circuit 459
main features 458
technical data 475
user-configurable circuit 465
PS-HCFBD 1/2
configuration template 522
diagnostic messages 517
high-current, full-bridge driver 514
I/O circuit 507
main features 506
technical data 519
PS-HCHBD 2/1
configuration template 502
diagnostic messages 498
high-current, high-side driver 493
high-current, low-side driver 494
I/O circuit 483
main features 482
technical data 500
user-configurable circuit 488
PS-HCHBD 2/2
configuration template 553
diagnostic messages 546
high-current, high-side driver 539
high-current, low-side driver 540
I/O circuit 527
main features 526
technical data 550
PS-HSD 6/1
configuration template 393
diagnostic messages 389

high-side driver module 371
I/O circuit 373
main features 372
technical data 391
user-configurable circuit 377
PS-LSD 6/1
configuration template 423
diagnostic messages 420
main features 398
technical data 421
user-configurable circuit 403
push/pull mode
SC-DO 8/2 241

R

RP_HC_CAB1 power/load cable
technical data 573
RP_THM_CAB1 splitter cable
technical data 329
RP_THM_CAB2 splitter cable
technical data 330
RP_THMCAB1 579
RP_THMCAB2 580
RPBOB_CAB2 (Break-Out Box connection cable)
technical data 577
RPBOB_CAB3 (Break-Out Box connection cable)
technical data 578
RPBOB_CAB4 (Break-Out Box connection cable)
technical data 578

S

safety precautions 21
SC module
suitable Control Unit slots 139
suitable SC Unit slots 47
SC Unit
pinout
front I/O connector F1 66
front I/O connector F2 68
rear I/O connector R1 71
rear I/O connector R2 71
signal specification
front I/O connector F1 67
front I/O connector F2 69
rear I/O connector R1 71
rear I/O connector R2 71
technical data 81
unit features 42
SC-AI 10/1
configuration template 201
diagnostic messages 199
I/O circuit 189
main features 188
technical data 200
user-configurable circuit 193
SC-AI 4/1
configuration template 183
I/O circuit 173
main features 172
technical data 181
user-configurable circuit 176
SC-CCDI 6/1
configuration template 280
crank-/camshaft module 263
I/O circuit 265
main features 264
technical data 279
user-configurable circuit 270
SC-DI 8/1
configuration template 219
I/O circuit 207
main features 206
technical data 218
user-configurable circuit 211
SC-DO 8/1
configuration template 235
diagnostic messages 233
I/O circuit 223
main features 222
technical data 234
user-configurable circuit 227
SC-DO 8/2
configuration template 250
diagnostic messages 244
high-side mode 241
I/O circuit 239
low-side mode 241
main features 238
push/pull mode 241
software-configurable parameter 241
technical data 249
SC-EGOS 2/1
configuration template 299
diagnostic messages 296
I/O circuit 288
main features 287
technical data 298
schematic overview
Break-Out Boxes 558
SC-KNOCK 4/1
configuration template 313
diagnostic messages 311
I/O circuit 302
main features 302
signal conditioning module 301
technical data 312
user-configurable circuit 308
SC-SENS 4/1
configuration template 261
diagnostic messages 258
I/O circuit 255
main features 254
technical data 259
SC-TC 8/1
configuration template 331
I/O circuit 319
main features 318
signal conditioning module 317
technical data 327
SC-UHEGO 2/1
configuration template 348
diagnostic messages 345
I/O circuit 336
main features 335
technical data 347
signal conditioning module
SC-AI 10/1 187
SC-AI 4/1 171
SC-CCDI 6/1 263
SC-DI 8/1 205
SC-DO 8/1 221
SC-EGOS 2/1 285
SC-KNOCK 4/1 301
SC-SENS 4/1 253
SC-TC 8/1 317
SC-UHEGO 2/1 333
signal specification
Control Unit
front I/O connector F1 158
front I/O connector F2 161
Power Unit
front I/O connector F1 111
front I/O connector F2 114
rear I/O connector R1 115
rear I/O connector R2 115
SC Unit
front I/O connector F1 67
front I/O connector F2 69
rear I/O connector R1 71
rear I/O connector R2 71
software-configurable parameter
SC-DO 8/2 241
status LEDs
Control Unit front panel 163
Power Unit front panel 121
SC Unit front panel 76

T

technical data
Break-Out Box for Control Unit 568
Break-Out Box for Power Unit 568
Break-Out Box for SC Unit 568
Control Unit 168
HSL_PATCH_300V 572
LVDS_CAB2 (LVDS link cable) 575
LVDS_CAB3 (LVDS link cable) 576
PC connection cable (USB_CAB5) 583
PC connection cable for Calibration Hub/RapidPro (USB_CAB6) 584
Power Unit 127
PS-DINJ 2/1 453
PS-FBD 2/1 367
PS-HCFBD 1/1 475
PS-HCFBD 1/2 519
PS-HCHBD 2/1 500
PS-HCHBD 2/2 550
PS-HSD 6/1 391
PS-LSD 6/1 421
RP_HC_CAB1 power/load cable 573
RP_THM_CAB1 splitter cable 329
RP_THM_CAB2 splitter cable 330

RPBOB_CAB2 (Break-Out Box connection cable) 577
RPBOB_CAB3 (Break-Out Box connection cable) 578
RPBOB_CAB4 (Break-Out Box connection cable) 578
SC Unit 81
SC-AI 10/1 200
SC-AI 4/1 181
SC-CCDI 6/1 279
SC-DI 8/1 218
SC-DO 8/1 234
SC-DO 8/2 249
SC-EGOS 2/1 298
SC-KNOCK 4/1 312
SC-SENS 4/1 259
SC-TC 8/1 327
SC-UHEGO 2/1 347
thermocouple connection cable RP_THMCAB1 579
thermocouple connection cable RP_THMCAB2 580
type code 40

U

unit features
Control Unit 132
Power Unit 86
SC Unit 42
USB_CAB1 582
USB_CAB12 584
USB_CAB4 582
USB_CAB5
PC connection cable 583
USB_CAB6
PC connection cable for Calibration Hub/RapidPro 584
user-configurable circuit
PS-HCFBD 1/1 465
PS-HCHBD 2/1 488
PS-HSD 6/1 377
PS-LSD 6/1 403
SC-AI 10/1 193
SC-AI 4/1 176
SC-CCDI 6/1 270
SC-DI 8/1 211
SC-DO 8/1 227
SC-KNOCK 4/1 308

W

wire dimensions
Break-Out Boxes 565