ASM Electric Components

Reference

For ASM Electric Components Blockset 3.11.1 and
ASM Electric Components Operator Blockset 3.11.1

Release 2021-A – May 2021

dSPACE

How to Contact dSPACE

Mail:	dSPACE GmbH Rathenaustraße 26 33102 Paderborn Germany
Tel.:	+49 5251 1638-0
Fax:	+49 5251 16198-0
E-mail:	info@dspace.de
Web:	http://www.dspace.com

How to Contact dSPACE Support

If you encounter a problem when using dSPACE products, contact your local dSPACE representative:

- Local dSPACE companies and distributors: http://www.dspace.com/go/locations
- For countries not listed, contact dSPACE GmbH in Paderborn, Germany.
  Tel.: +49 5251 1638-941 or e-mail: support@dspace.de

You can also use the support request form: http://www.dspace.com/go/supportrequest. If you are logged on to mydSPACE, you are automatically identified and do not need to add your contact details manually.

If possible, always provide the relevant dSPACE License ID or the serial number of the CmContainer in your support request.

Software Updates and Patches

dSPACE strongly recommends that you download and install the most recent patches for your current dSPACE installation. Visit http://www.dspace.com/go/patches for software updates and patches.

Important Notice

This publication contains proprietary information that is protected by copyright. All rights are reserved. The publication may be printed for personal or internal use provided all the proprietary markings are retained on all printed copies. In all other cases, the publication must not be copied, photocopied, reproduced, translated, or reduced to any electronic medium or machine-readable form, in whole or in part, without the prior written consent of dSPACE GmbH.

© 2008 - 2021 by:
dSPACE GmbH
Rathenaustraße 26
33102 Paderborn
Germany

This publication and the contents hereof are subject to change without notice.

AUTERA, ConfigurationDesk, ControlDesk, MicroAutoBox, MicroLabBox, SCALEXIO, SIMPHERA, SYNECT, SystemDesk, TargetLink and VEOS are registered trademarks of dSPACE GmbH in the United States or other countries, or both. Other brand names or product names are trademarks or registered trademarks of their respective companies or organizations.

Contents

About This Reference 13

Electric Components Overview 15

Electric Components Library 15

Electric Components Closed Loop 17

Controller 18
- BLDC Controller 19
- BLDC Controller Basic 20
- Block Modulator 23
- PI Controller 25
- PI Controller Ext Saturation 26
- PMSM Controller 28
- PMSM Controller Basic 30
- PMSM Controller Three Level 35
- SCIM Controller 37
- SCIM Controller Basic 40
- Space Vector Modulator 45
- Three Level Space Vector Modulator 46

Electric Machines 48
- Brushless DC Machine Alpha Beta 48
- Permanent Magnet Synchronous Machine DQ 51
- Permanent Magnet Synchronous Machine DQ Nonlinear 54
- Separately Excited DC Machine 58
- Squirrel Cage Asynchronous Machine DQ 60

Power Electronics 64
- Three-Level Three-Phase Inverter 64
- Three-Phase DCM Inverter 67
- Three-Phase Inverter 72
- Three-Phase Rectifier 75

Sensors 79
- Hall Encoder 79

Electrics 81

Active Elements and Circuits 82
Half-Bridge Inverter 82
Three-Level Half-Bridge Inverter 86

Electric Machines 91
DC Machine 91
Electric Machine Basic 95

Passive Elements and Circuits 98
Current Sink 98
Potentiometer 100
P Load 101
R Load 102
RC Load Parallel 103
RC Load Series 105
RL Load Parallel 106
RL Load Series 108
RL System Select 109
RLC Load Parallel 111
RLC Load Series 112

Power Supplies 115
DC Link 115
Supercapacitor 118
Three-Phase Power Supply 119

Hybrid and Battery Electric Vehicle 123

Soft ECU BEV 124
Brake Control BEV 124
Overview of the Soft ECU Battery Charging 127
Soft ECU Charge Controller 128
Soft ECU Charging Station 129
Torque Request Coordination BEV 131

Soft ECU Hybrid Vehicle 134
Brake Control 134
Clutch Control 136
Drive Management 137
Key Signals ICE 141
Hybrid Vehicle Switch 143

Starter ICE ... 143
Torque Request Coordination ... 145

Mechanics 147

Engine Inertia ... 147
Engine Position ... 149

Utils 151

Anti-Aliasing and Power Calculation ... 152
Current or Voltage Conversion of Three-Phase Systems ... 153
Discrete Differentiator ... 157
Discrete Integrator ... 157
Discrete PT1 ... 158
Duty Cycle Evaluation ... 159
Duty Cycles Routing ... 160
Park Clarke Transformation ... 161
Park Modulator ... 163
Phase Arrangement ... 163
Signals Routing ... 164
S-R Flip-Flop ... 165

Vehicle Electrical System 167

Electric Machines ... 168
Alternator ... 168
Starter ... 171

Accumulator ... 176
Battery ... 176
Battery Multicell ... 184
Parallel Circuit Current Split ... 195
RC Battery ... 198

Electric Loads ... 200
Overview of the Air Conditioning Subsystem ... 201
Air Channel ... 201
Cabin ... 204
Compressor ... 208
Fan ... 211
Light ... 213
Lighting System ... 214
PTC Grid Defroster ... 216

PTC Heater ... 219
Refrigerant Circuit ... 221
Soft ECU Air Conditioning ... 223

Demos 227

Vehicle Electrical System ... 229
Basics on the Vehicle Electrical System Demo Model ... 229
Overview of the Vehicle Electrical System Model ... 229

Hybrid Vehicle Model ... 231

Overview of the Hybrid Vehicle Models ... 231
Hybrid Vehicle Models ... 231

Vehicle Dynamics Hybrid Model ... 233
Basics on the Vehicle Dynamics Hybrid Demo Model ... 234
Overview of the Vehicle Dynamics Hybrid Model ... 234

Gasoline Engine Hybrid Model ... 236
Basics on Gasoline Engine Hybrid Model Demo Model ... 236
Overview of the Gasoline Engine Hybrid Model ... 237

Battery Electric Vehicle (BEV) with Traffic ... 239
Basics on the Battery Electric Vehicle with Traffic Demo Model ... 239
Overview of the Battery Electric Vehicle with Traffic Model ... 240

Squirrel Cage Asynchronous Machine ... 242
Basics on the Squirrel Cage Asynchronous Machine Demo Model ... 242
Overview of the Electric Drive Closed Loop SCIM Model ... 242

Brushless DC Machine ... 244
Basics on the Electric Drive Closed Loop BLDC Demo Model ... 244
Overview of the Electric Drive Closed Loop BLDC Model ... 244

Permanent Magnet Synchronous Machine ... 246
Basics on the Electric Drive closed Loop PMSM Nonlinear Demo Model ... 246
Overview of the Electric Drive closed Loop PMSM Nonlinear Model ... 246

Battery Electric Vehicle (BEV) ... 248
Basics on the Battery Electric Vehicle Demo Model ... 248
Overview of the Battery Electric Vehicle Model ... 249

Permanent Magnet Synchronous Machine (PMSM) with 3-Level Inverter ... 252
Basics on the Electric Drive closed Loop PMSM Linear with 3-Level Inverter Demo Model ... 252
Overview of the Electric Drive closed Loop PMSM Linear with 3-Level Inverter Model ... 253

ASM Modules..... 254
Alternator Module..... 256
Battery Module..... 257
Battery System Module..... 258
Charging Station Module..... 259
Crankshaft Module..... 260
Driver Module..... 260
Driver Assistance Simple Module..... 264
Driver Assistance Module..... 265
Driver Basic Module..... 267
Drivetrain Hybrid Basic Module..... 270
Drivetrain BEV Module..... 273
Drivetrain Hybrid Vehicle Module..... 274
Electrical Loads Module..... 278
Electric Machine (BLDC) Module..... 279
Electric Machine (PMSM) Module..... 280
Electric Machine (PMSM 3LI) Module..... 282
Electric Machine Basic Module..... 284
Electric Machine SCIM..... 285
Electrical System Module..... 286
Engine Basic Module..... 289
Engine Gasoline Module..... 292
Environment Basic Module..... 298
Environment Traffic Module..... 300
Environment Module..... 311
Hall Encoder Module..... 321
Torque Manager P2 Module..... 322
Mechanics Module..... 333
Rectifier Module..... 334
Resolver Module..... 334
Supercapacitor Module..... 335
Supercapacitor (3LI) Module..... 337
Starter Module..... 338
Start System Module..... 339
Torque Manager Module..... 340
Vehicle Dynamics Module..... 343
Vehicle Dynamics Basic Module..... 351

Subsystems..... 353

Subsystems of the Driver Module..... 353
Lateral Controller Subsystem..... 354

Longitudinal Controller Subsystem..... 356
Reference Velocity Subsystem..... 358

Subsystems of the Driver Assistance Module..... 359
Soft ECU ACC Subsystem..... 359

Subsystems of the Driver Basic Module..... 362
Driver Subsystem..... 362

Subsystems of the Engine Basic Module..... 365
Engine Basic Subsystem..... 365
Soft ECU Engine Subsystem..... 366

Subsystems of the Engine Gasoline Module..... 368
Air Path Subsystem..... 369
Cooling Subsystem..... 373
Evaporator Subsystem..... 374
Exhaust System Subsystem..... 378
Fuel System Subsystem..... 379
Piston Engine Subsystem..... 383
Soft ECU Gasoline Subsystem..... 386
Air Path Control Subsystem..... 391
Torque Control Subsystem..... 393

Subsystems of the Environment Traffic Module..... 394
Maneuver Submodule..... 396
Road Submodule..... 399
Fellow Movement Subsystem..... 400
Object Parameters Subsystem..... 401
Collision Sensor Subsystem..... 402
Object Sensor 2-D Subsystem..... 404
Object Data Subsystem..... 407
Schedule and Calculate Sensor Subsystem..... 408
Sensor Mapping Subsystem..... 411
Sensor Parameters Subsystem..... 413
Object Sensor 3-D Subsystem..... 415
Custom Points Subsystem..... 417
Object Data Subsystem..... 419
Radar Effects Subsystem..... 422
Schedule And Calculate Sensor Subsystem..... 426
Sensor Mapping Subsystem..... 428
Sensor Parameters Subsystem..... 430
Traffic Sign Sensor Subsystem..... 431
Groundtruth Submodule..... 432

Subsystems of the Vehicle Dynamics Module 433
Brake Subsystem 434
Suspension Subsystem 435
Front Suspension Subsystem 437
Rear Suspension Subsystem 438
Vehicle Movement Subsystem 440

Blocks from Former Versions 443

Alternator (Up to Version 5.0) 444
Battery (Up to Version 4.0) 447
Battery (Up to Version 13.0) 452
Battery Multicell (Up to Version 10.0) 460
Battery Multicell (Up to Version 11.0) 470
Brake Control (Up to Version 2.0) 481
Brake Control (Up to Version 4.0) 484
Brake Control BEV (Up to Version 2.0) 486
Starter (Up to Version 5.0) 488
Three-Phase DCM Inverter (Up to Version 7.0) 492
Torque Request Coordination BEV (Up to Version 4.0) 497

New Features/Migration History of the ASM Electric Components Blockset 499

General Changes to the ASM Electric Components Blockset 504
History of the AIR_CHANNEL Block 507
History of the ALTERNATOR Block 508
History of the ASM_EC_ROUTING Block 508
History of the ASM_EC_STARDELTA Block 509
History of the BATTERY Block 509
History of the BATTERY_CELL Block 512
History of the BATTERY_MULTICELL Block 513
History of the BATTERY_THERMAL Block 515
History of the BLDC_CONTROLLER Block 516
History of the BLDC_CONTROLLER_BASIC Block 516
History of the Block_Modulator Block 517
History of the BRAKE_CONTROL Block 517
History of the BRAKE_CONTROL_BEV Block 518
History of the BRUSHLESS_DC_MACHINE_ALPHA_BETA Block 518
History of the COMPRESSOR Block 519
History of the DC_LINK Block 519
History of the DC_MACHINE Block 520

History of the DUTYCYCLES_ROUTING Block..... 520
History of the ELECTRIC_MACHINE_BASIC Block..... 520
History of the ENGINE_INERTIA Block..... 521
History of the ENGINE_POSITION Block..... 521
History of the HALF_BRIDGE_INVERTER Block..... 522
History of the HALL_ENCODER Block..... 523
History of the KEY_SIGNALS_ICE Block..... 523
History of the LIGHTING_SYSTEM Block..... 523
History of the PARALLEL_CIRCUIT_CURRENT_SPLIT Block..... 524
History of the PERMANENT_MAGNET_SYNCHRONOUS_MACHINE_D_Q Block..... 524
History of the PI_CONTROLLER Block..... 525
History of the PI_CONTROLLER_EXT_SATURATION Block..... 525
History of the PMSM_CONTROLLER Block..... 525
History of the PMSM_CONTROLLER_BASIC Block..... 526
History of the PMSM_CONTROLLER_THREE_LEVEL Block..... 526
History of the PMSM_D_Q_NONLINEAR Block..... 527
History of the POTENTIOMETER Block..... 528
History of the PTC_GRID_DEFROSTER Block..... 528
History of the RC_BATTERY Block..... 528
History of the RC_LOAD_SERIES Block..... 529
History of the RL_LOAD_PARALLEL Block..... 529
History of the RL_LOAD_SERIES Block..... 530
History of the RLC_LOAD_PARALLEL Block..... 530
History of the RLC_LOAD_SERIES Block..... 530
History of the SCIM_CONTROLLER Block..... 530
History of the SCIM_CONTROLLER_BASIC Block..... 531
History of the SEPARATELY_EXCITED_DC_MACHINE Block..... 531
History of the SIGNALS_ROUTING Block..... 532
History of the SOFT_ECU_EV_CHARGE_CONTROLLER Block..... 532
History of the SOFT_ECU_CHARGING_STATION Block..... 533
History of the SoftECU_Hybrid_Manager Block..... 533
History of the SPACE_VECTOR_MODULATOR Block..... 534
History of the SQUIRREL_CAGE_ASYNCHRONOUS_MACHINE_D_Q Block..... 534
History of the STARTER Block..... 535
History of the STARTER_ICE Block..... 535
History of the SUPERCAPACITOR Block..... 536
History of the THREE_LEVEL_HALF_BRIDGE_INVERTER Block..... 536
History of the THREE_LEVEL_SPACE_VECTOR_MODULATOR Block..... 537
History of the THREE_LEVEL_THREE_PHASE_INVERTER Block..... 537
History of the THREE_PHASE_DCM_INVERTER Block..... 537

History of the THREE_PHASE_INVERTER Block..... 538
History of the THREE_PHASE_POWERSUPPLY Block..... 539
History of the THREE_PHASE_RECTIFIER Block..... 539
History of the TRQ_REQUEST_COORDINATION Block..... 540
History of the TRQ_REQUEST_COORDINATON_BEV Block..... 540
History of the Electric Components Demo Models..... 541

Appendix 545

Numeric Solver..... 545
Bibliography..... 546

Index 547

About This Reference

Content

This document shows you how to work with the ASM Electric Components Model.

Required knowledge

You should be familiar with the Automotive Simulation Models, ModelDesk, and ControlDesk.

Symbols

dSPACE user documentation uses the following symbols:

Symbol	Description
DANGER	Indicates a hazardous situation that, if not avoided, will result in death or serious injury.
WARNING	Indicates a hazardous situation that, if not avoided, could result in death or serious injury.
CAUTION	Indicates a hazardous situation that, if not avoided, could result in minor or moderate injury.
NOTICE	Indicates a hazard that, if not avoided, could result in property damage.
Note	Indicates important information that you should take into account to avoid malfunctions.
Tip	Indicates tips that can make your work easier.
	Indicates a link that refers to a definition in the glossary, which you can find at the end of the document unless stated otherwise.
	Precedes the document title in a link that refers to another document.

Naming conventions

dSPACE user documentation uses the following naming conventions:

%name% Names enclosed in percent signs refer to environment variables for file and path names.

< > Angle brackets contain wildcard characters or placeholders for variable file and path names, etc.

Special folders

Some software products use the following special folders:

Common Program Data folder A standard folder for application-specific configuration data that is used by all users.

```
%PROGRAMDATA%\dSPACE\<InstallationGUID>\<ProductName>
```

or

```
%PROGRAMDATA%\dSPACE\<ProductName>\<VersionNumber>
```

Documents folder A standard folder for user-specific documents.

```
%USERPROFILE%\Documents\dSPACE\<ProductName>\
<VersionNumber>
```

Local Program Data folder A standard folder for application-specific configuration data that is used by the current, non-roaming user.

```
%USERPROFILE%\AppData\Local\dSPACE\<InstallationGUID>\
<ProductName>
```

Accessing dSPACE Help and PDF Files

After you install and decrypt dSPACE software, the documentation for the installed products is available in dSPACE Help and as PDF files.

dSPACE Help (local) You can open your local installation of dSPACE Help:

- On its home page via Windows Start Menu
- On specific content using context-sensitive help via **F1**

dSPACE Help (Web) You can access the Web version of dSPACE Help at www.dspace.com/go/help.

To access the Web version, you must have a *mydSPACE* account.

PDF files You can access PDF files via the icon in dSPACE Help. The PDF opens on the first page.

Electric Components Overview

Electric Components Library

Introduction

This topic gives you information about the ASM Electric Components Library.

Contents

The library is divided into two basic parts:

- One subsystem with model components to simulate the Vehicle Electrical System.
- One subsystem with models for Electric Components Closed Loop applications such as testing a real machine controller in a HIL system.

The input and output interface and the modeling approach used in the model components of the Vehicle Electrical System and Electric Components Closed Loop are designed to be compatible with each other. Thus, the model components can be used and connected together in the same model if necessary.

The following illustration shows the first layer of the library:

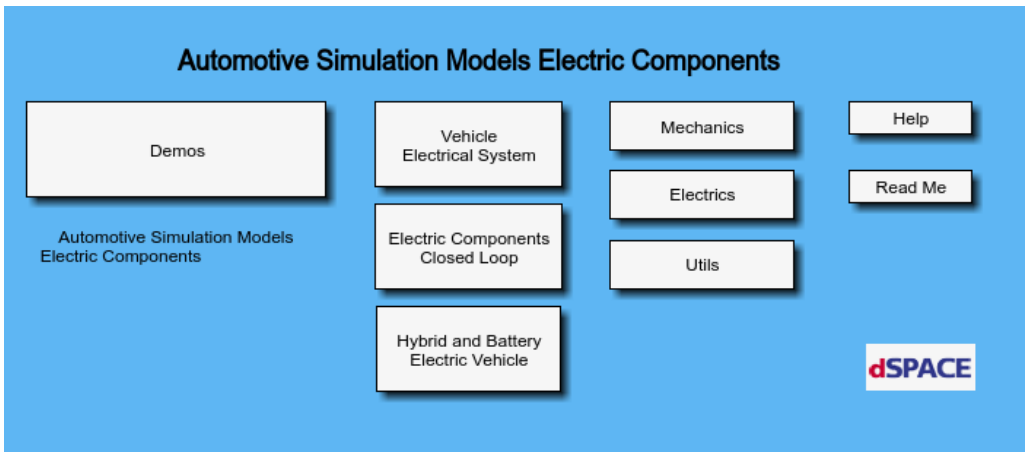

The library has the following main subsystems:

Vehicle Electrical System The simulation models of Vehicle Electrical System are typically used to simulate the battery voltage according to the charge and discharge current of different electrical loads, the starter and the alternator. The torque load of the engine crankshaft produced by electric components can also be simulated. For an example application, refer to the Vehicle Electrical System demo model.

Electric Components Closed Loop A typical application for the Electric Components Closed Loop is simulation of electric motors such as the drive systems of hybrid electric vehicles in a closed loop with a real controller. The blocks inside this library are specially prepared for use in conjunction with a three-phase PWM measurement I/O and can run with varying sample time depending on the PWM. For an example application, refer to the Electric drive closed loop demo model.

Hybrid and Battery Electric Vehicle The Hybrid and Battery Electric Vehicle (BEV) subsystem includes a hybrid manager of a hybrid vehicle and a torque manager of a BEV. It also includes the battery charge controller of an electric vehicle and the charging station. The ASM hybrid and BEV components, such as the electric machine, the battery and the hybrid manager of the ASM Electric Components Library, are used in combination with the ASM Vehicle Dynamics or ASM Engine (mean value engine model or in-cylinder), including ASM Drivetrain Basic to simulate a complete hybrid or battery electric vehicle model (see Hybrid Vehicle Model on page 231 and Soft ECU BEV on page 124).

Mechanics The mechanical parts such as the crankshaft of an engine are in the Mechanics subsystem.

Electrics The Electrics subsystem of the ASM Electric Components Library includes the models of basic electronic elements which are used as subcomponents in the Vehicle Electrical System and Electric Components Closed Loop models.

Electric Components Closed Loop

Where to go from here

Information in this section

Controller.....18
The **Controller** subsystem includes different controller models.

Electric Machines.....48
The Electric Machines subsystem includes different electric machines.

Power Electronics.....64
The **Power electronics** subsystem includes different power electronics.

Sensors.....79
The **Sensors** subsystem includes sensor models.

Controller

Where to go from here

Information in this section

BLDC Controller 19
The BLDC controller combines the basic BLDC controller and the block modulator.

BLDC Controller Basic 20
This controller is designed to control a brushless DC machine (BLDC) with its typical staircase-shaped control.

Block Modulator 23
This block presents a block modulator, for example, used in BLDC Controller.

PI Controller 25
This block implements a discrete-time PI controller that is obtained after a discretization of a continuous-time PI controller.

PI Controller Ext Saturation 26
This controller works like the PI controller. The only difference is that the saturation must be designed externally.

PMSM Controller 28
The PMSM controller combines the PMSM controller basic and the space vector modulator.

PMSM Controller Basic 30
This controller is designed to control a permanent magnet synchronous machine (PMSM). It contains two current controllers (d-axis and q-axis), a speed controller, and a field-weakening controller.

PMSM Controller Three Level 35
The PMSM controller combines the PMSM controller basic and the space vector modulator.

SCIM Controller 37
The SCIM controller combines the SCIM controller basic and the space vector modulator.

SCIM Controller Basic 40
This controller controls a squirrel cage induction machine (SCIM).

Space Vector Modulator 45
This block presents a space vector modulator, for example, used in PMSM Controller.

Three Level Space Vector Modulator 46
This block presents a space vector modulator, for example, used in PMSM Controller Three Level.

BLDC Controller

Description

The BLDC controller combines the basic BLDC controller and the block modulator.

The next illustration shows the Simulink representation of the BLDC controller:

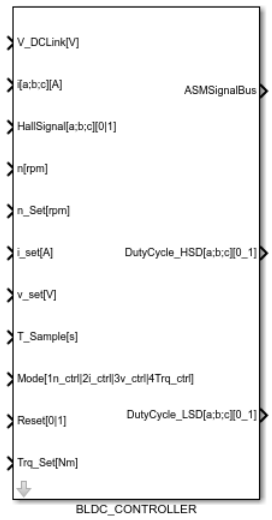

Inports

The following table shows the inports:

Name	Unit	Description
HallSignals[a;b;c]	[0|1]	Hall signals
I_Set	[A]	Setpoint in current control mode
i[a;b;c]	[A]	Line currents of the controlled motor
Mode	[1|2|3|4]	Switch between the control modes: ▪ 1: Speed control ▪ 2: Current control ▪ 3: Voltage control ▪ 4: Torque control
n	[rpm]	Motor speed
n_Set	[rpm]	Set point in speed control mode
Reset	[0|1]	Reset
T_Sample	[s]	Sample time
Trq_Set	[Nm]	Set point in torque control mode
V_DCLink	[V]	DC link voltage
V_Set	[V]	Set point in voltage control mode

Outports

The following table shows the outports:

Name	Unit	Description
ASMSignalBus	[]	Signal bus that contains signals of ASM components. Refer to ASMSignalBus (ASM User Guide 🕮).
DutyCycle_HSD[a;b;c]	[0_1]	Duty cycle of the high-side driver (phase a;b;c)
DutyCycle_LSD[a;b;c]	[0_1]	Duty cycle of the low-side driver (phase a;b;c)

Parameters

The following table shows the block parameters:

Name	Unit	Description
Const_Back_EMF	[Vs]	Back EMF constant
Const_Filtertime_Current	[s]	Theta offset
Const_Limit_i	[A]	Maximum current
Const_Ki_i	[]	Ki iq controller
Const_Ki_n	[]	Ki n controller
Const_Kp_i	[]	Kp iq controller
Const_Kp_n	[]	Kp n controller
Const_Limit_Trq	[Nm]	Torque limit
Const_Limit_n	[rpm]	Maximum speed
Const_PolePairs	[]	Number of pole pairs

Related topics

References

BLDC Controller (ModelDesk Parameterizing 🕮)
BLDC Controller Basic.....20
Block Modulator.....23
History of the BLDC_CONTROLLER Block.....516

BLDC Controller Basic

Description

This controller is designed to control a brushless DC machine (BLDC) with its typical staircase-shaped control. It is implemented as a cascade control composed of speed and current controller. Especially in BLDC operation mode, there is only one current controller to control the active current. A special current measurement is implemented for the setpoint, containing a hall signal-based analysis of the active current plus a PT1 filter.

The BLDC Controller can be configured in different ways:

- Voltage control
- Current control
- Speed control
- Torque control

All parameters and settings can be configured by input ports.

The following illustration shows the Simulink representation of the basic BLDC controller:

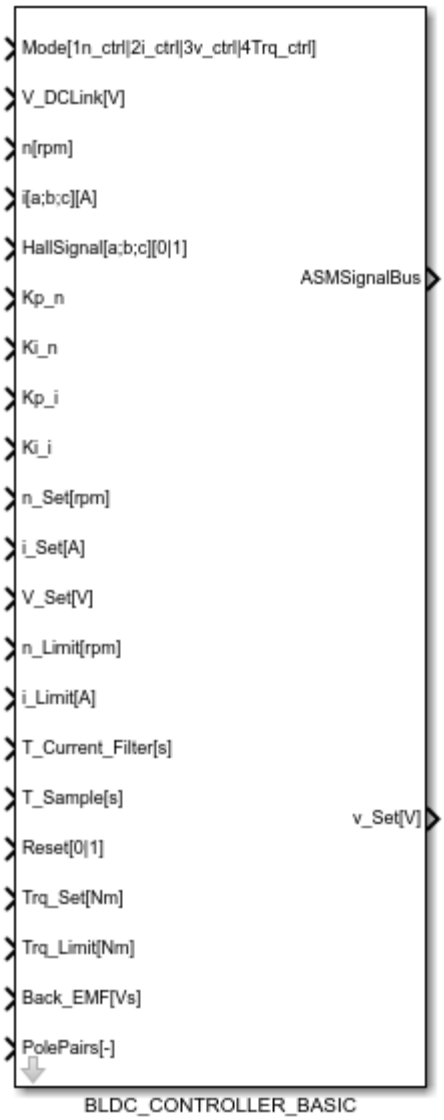

Controller

The following illustration shows the main components of the controller:

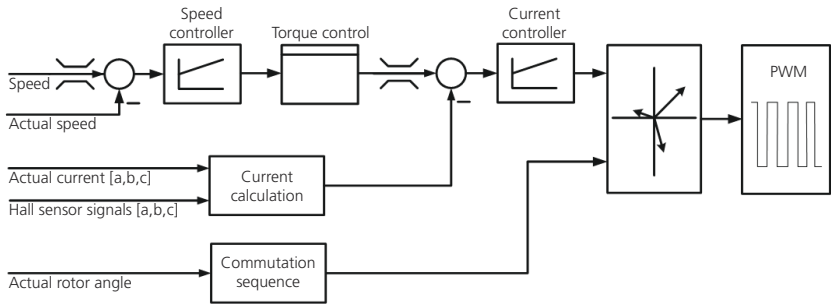

The controller has the following main components:

- **Speed controller:** The speed controller is based on a PI regulator. The setpoint for the speed is limited to his maximum. The output is a setpoint for the torque.
- **Current controller:** The current controller is based on a PI regulator. The setpoint for the current is limited to his maximum.
- **Current calculation:** A special current measurement is implemented for the setpoint, containing a hall signal-based analysis of the active current plus a PT1 filter.

Inports

The following table shows the inports:

Name	Unit	Description
Back_EMF	[Vs]	Back EMF constant
HallSignals[a;b;c]	[0|1]	Hall signals
i_Limit	[A]	Maximum current
I_Set	[A]	Setpoint in current control mode
i[a;b;c]	[A]	Line currents of the controlled motor
Ki_i	[]	Ki iq controller
Ki_n	[]	Ki n controller
Kp_i	[]	Kp iq controller
Kp_n	[]	Kp n controller
Mode	[1|2|3|4]	Switch between the three control modes ▪ 1: Speed control ▪ 2: Current control ▪ 3: Voltage control ▪ 4: Torque control
n	[rpm]	Motor speed
n_Limit	[rpm]	Maximum speed
n_Set	[rpm]	Setpoint in speed control mode
PolePairs	[]	Number of pole pairs
Reset	[0|1]	Reset

Name	Unit	Description
T_Current_Filter	[s]	Theta offset
T_Sample	[s]	Sample time
Trq_Limit	[Nm]	Torque limit
Trq_Set	[Nm]	Setpoint in torque control mode
V_DCLink	[V]	DC link voltage
V_Set	[V]	Setpoint in voltage control mode

Outports

The following table shows the outports:

Name	Unit	Description
ASMSignalBus	[]	Signal bus that contains signals of ASM components. Refer to ASMSignalBus (ASM User Guide 🕮).
v_Set[a;b;c]	[V]	Reference voltages

Parameter

The following table shows the block parameters:

Name	Unit	Description
is_dir	[0|1]	Indicator vector for direction of phase current ▪ 0: -/+ ▪ 1: +/-
is_index	[]	Indicator matrix for phase current, which commutates to 0 A in the next sector depending on the hall signals

Related topics

References

History of the BLDC_CONTROLLER_BASIC Block..... 516

Block Modulator

Description

This block presents a block modulator, for example, used in BLDC Controller.

The next illustration shows the Simulink representation of a block modulator:

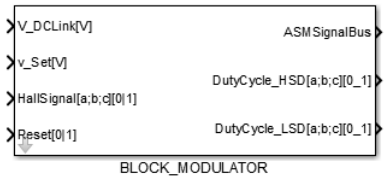

Inports

The following table shows the inports:

Name	Unit	Description
HallSignals[a;b;c]	[0|1]	Hall signals
Reset	[0|1]	Reset
V_DCLink	[V]	DC link voltage
v_Set	[V]	Reference voltage from controller

Outports

The following table shows the outports:

Name	Unit	Description
ASMSignalBus	[]	Signal bus that contains signals of ASM components. Refer to ASMSignalBus (ASM User Guide 🕮).
DutyCycle_HSD[a;b;c]	[0_1]	Duty cycle of the high-side driver (phase a;b;c)
DutyCycle_LSD[a;b;c]	[0_1]	Duty cycle of the low-side driver (phase a;b;c)

Parameters

The following table shows the parameters:

Name	Unit	Description
Zi_HSD	[]	Matrix to configure the HSD-active states depending on the hall signals
Zi_LSD	[]	Matrix to configure the LSD-active states depending on the hall signals

Related topics

References

BLDC Controller 19
History of the Block_Modulator Block 517

PI Controller

Description

A proportional–integral controller (PI controller) is a control loop feedback mechanism widely used in electric drive control systems.

A PI controller attempts to correct the error between a measured variable and a desired setpoint by calculating and then outputting a corrective action.

This block implements a discrete-time PI controller that is obtained after a discretization of a continuous-time PI controller. The integral term is approximated by using the Forward Euler method. The control algorithm uses the *incremental algorithm or velocity algorithm*. This control algorithm reduces the memory requirements and increases the calculation speed of the controller. It is given by the following equation:

$$u(k) - u(k-1) = Kp \cdot (e(k) - e(k-1) + Ki \cdot T \cdot e(k)$$

The implemented controller also has the following anti-windup methods, which can be set in the block mask for limiting the integrator windup effect:

Anti-Windup Method	Description
Clamping	The integration is stopped when all of the following occurs: ▪ The control variable saturates. ▪ The control error and the control variable have the same sign, i.e., the integral gain is set to zero.
Saturation	If the control variable saturates, the proportion of the integral term will be calculated so that the controller controls only the border.

The next illustration shows the Simulink representation of PI controller:

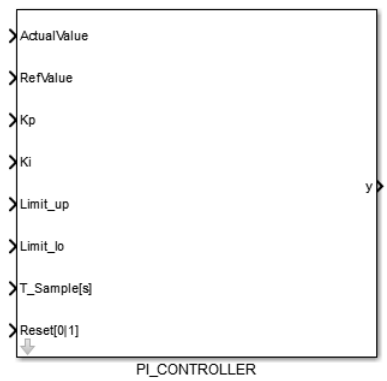

Inports

The following table shows the inports:

Name	Unit	Description
ActualValue	[]	Actual value
Ki	[]	Ki = Kp / Tin
Kp	[]	Kp
RefValue	[]	Reference value
T_Sample	[s]	Sample time
Limit_lo	[]	Lower limit
Limit_up	[]	Upper limit
Reset	[0|1]	Reset

Outports

The following table shows the outports:

Name	Unit	Description
u	[]	Actuating variable

Parameters

The following table shows the parameters:

Name	Unit	Description
Sw_AntiWindup	[]	Anti-windup methods ▪ None ▪ Clamping ▪ Saturation

Related topics

References

History of the PI_CONTROLLER Block..... 525

PI Controller Ext Saturation

Description

This controller works like the PI controller. The only difference is that the saturation must be designed externally.

The following illustration shows the Simulink representation of the block.

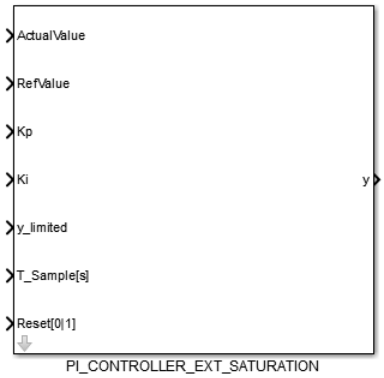

Inports

The following table shows the inports:

Name	Unit	Description
ActualValue	[]	Actual value
Ki	[]	Ki = Kp / Tin
Kp	[]	Kp
RefValue	[]	Reference value
Reset	[0|1]	Reset
T_Sample	[s]	Sample time
u_limited	[]	Control variable after external limit

Outports

The following table shows the outports:

Name	Unit	Description
u	[]	Actuating variable

Parameters

The following table shows the parameters:

Name	Unit	Description
Sw_AntiWindup	[]	Anti-windup methods ▪ None ▪ Clamping ▪ Saturation

Related topics

References

History of the PI_CONTROLLER_EXT_SATURATION Block..... 525
PI Controller..... 25

PMSM Controller

Description

The PMSM_CONTROLLER block combines the basic PMSM controller and the space vector modulator. For information, refer to PMSM Controller Basic on page 30 and Space Vector Modulator on page 45.

The next illustration shows the Simulink representation of the PMSM controller:

Inports

The following table shows the inports:

Name	Unit	Description
i[a;b;c]	[A]	Line currents of the controlled motor
I_d_set	[A]	Setpoint in current control mode
I_q_set	[A]	Setpoint in current control mode
Mode	[1|2|3|4]	Switch between control modes: ▪ 1: Speed control ▪ 2: Current control ▪ 3: Voltage control ▪ 4: Torque control

Name	Unit	Description
n	[rpm]	Motor speed
n_Set	[rpm]	Setpoint in speed control mode
Reset	[0|1]	Reset
theta	[rad]	Mechanic motor angle
Trq_Set	[Nm]	Setpoint in torque control mode
T_Sample	[s]	Sample time
V_d_set	[V]	Setpoint in voltage control mode
V_DCLink	[V]	DC link voltage
V_q_set	[V]	Setpoint in voltage control mode

Outports

The following table shows the outports:

Name	Unit	Description
ASMSignalBus	[]	Signal bus that contains signals of ASM components. Refer to ASMSignalBus (ASM User Guide 🕮).
DutyCycle_HSD[a;b;c]	[0_1]	Duty cycle of the high-side driver (phase a;b;c)
DutyCycle_LSD[a;b;c]	[0_1]	Duty cycle of the low-side driver (phase a;b;c)

Parameter

The following table shows the block parameters:

Name	Unit	Description
Const_f_Set	[Hz]	Frequency of output voltages (V_Ctrl mode)
Const_I_Max	[A]	Maximum current
Const_Id_Fieldweakening	[A]	Maximum field-weakening current
Const_Ki_id	[]	Ki id controller
Const_Ki_iq	[]	Ki iq controller
Const_Ki_fw	[]	Ki fieldweakening controller
	[]	Kp fieldweakening controller
Const_Ki_n	[]	Ki n controller
Const_Kp_id	[]	Kp id controller
Const_Kp_iq	[]	Kp iq controller
Const_Kp_n	[]	Kp n controller
Const_Ld_Stator	[H]	Stator inductance in direct axis Lsd
Const_Limit_id	[A]	Maximum current in direct axis
Const_Limit_iq	[A]	Maximum current in quadrature axis
Const_Limit_n	[rpm]	Speed limit
Const_Limit_Trq	[Nm]	Torque limit

Name	Unit	Description
Const_Limit_u	[V]	Maximum output voltage
Const_Lq_Stator	[Wb]	Stator inductance in quadrature axis Lsq
Const_PolePairs	[]	Number of pole pairs
Const_Psi	[]	Flux induced by magnet Psi
Const_theta_offset	[rad]	Theta offset
SW_Fieldweakening	[1|2]	Switch for field-weakening mode: ▪ 1: Off ▪ 2: On
Sw_MTPA	[0|1]	Switch for maximum torque per ampere (MTPA) ▪ 0: No ▪ 1: Yes
Sw_PowerInvariant	[1|2]	Switch for transformation method power invariant: ▪ 1: On (invariant with respect to power) ▪ 2: Off (invariant with respect to reference values)
Sw_StarDeltaConfig	[1|2]	Switch for machine configuration: ▪ 1: Star ▪ 2: Delta

Related topics

References

History of the PMSM_CONTROLLER Block..... 525
PMSM Controller (ModelDesk Parameterizing 🕮)

PMSM Controller Basic

Description

This controller is designed to control a permanent magnet synchronous machine (PMSM). It contains two current controllers (d-axis and q-axis), a speed controller, and a field-weakening controller.

The PMSM controller can be configured in the following ways:

- Voltage control
- Current control
- Speed control
- Torque control

All parameters and settings can be configured by input ports.

The following illustration shows the Simulink representation of the basic PMSM controller:

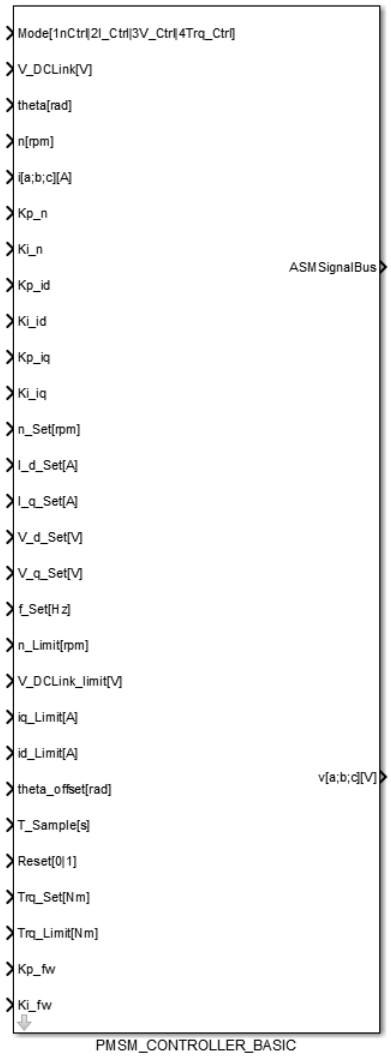

Controller

The main components of the controller are the following:

- Speed controller
- Maximum Torque Per Ampere (MTPA) and Fieldweakening controller block
- Current controllers

The following graphic shows the main components of the controller:

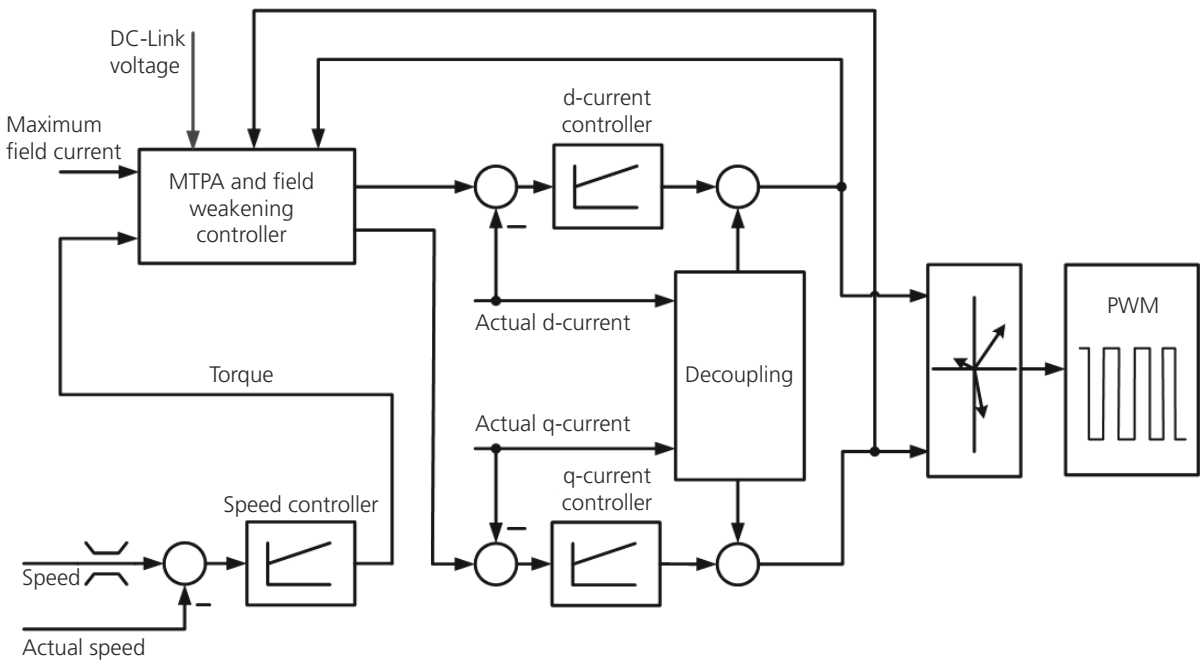

Speed controller The speed controller is based on a PI regulator. The setpoint for the speed is limited to his maximum. The output is a setpoint for the torque.

MTPA In the constant torque region (below base speed) the setpoints for direct and quadrature current (i_d, i_q) are calculated for a given torque according to the equations below:

1. $Trq = \frac{3}{2}\, p\left[\Psi_p\, i_q + \left(L_d - L_q\right) i_d\, i_q\right]$ (Amplitude-invariant)
2. $i_d = -\frac{\Psi_p}{2\left(L_d - L_q\right)} - \sqrt{\frac{\Psi_p^2}{4\left(L_d - L_q\right)^2} + i_q^2}$

   (For salient PMSM, where $L_d < L_q$)
3. $i_d = 0$

   (For non-salient PMSM, where $L_d = L_q$)

Note

For a salient PMSM, the direct current i_d can be calculated by solving the equation 1 and 2 by searching the minimal current per torque $i_d = f(Trq)$. This leads to a quartic equation.

Fieldweakening controller Above the base speed, the fieldweakening controller maintains the voltage and current within the limit of the system by setting an additional negative direct current.

Current controller The current controller consists of two controllers, which are based on PI regulators. The decoupling of the d- and q-current controllers and voltage limitation also occurs in this block.

Inports

The following table shows the inports:

Name	Unit	Description
f_Set	[Hz]	Frequency for output voltages (V_Ctrl mode)
I_d_set	[A]	Setpoint in current control mode
I_q_set	[A]	Setpoint in current control mode
i[a;b;c]	[A]	Line currents of the controlled motor
id_Limit	[A]	Maximum current in direct axis
iq_Limit	[A]	Maximum current in quadrature axis
Ki_id	[]	Ki id controller
Ki_iq	[]	Ki iq controller
Ki_fw	[]	Ki fieldweakening controller
Ki_n	[]	Ki n controller
Kp_id	[]	Kp id controller
Kp_iq	[]	Kp iq controller
Kp_fw	[]	Kp fieldweakening controller
Kp_n	[]	Kp n controller
Mode	[1|2|3|4]	Switch between control modes ▪ 1: Speed control ▪ 2: Current control ▪ 3: Voltage control ▪ 4: Torque control
n	[rpm]	Motor speed
n_Limit	[rpm]	Speed limit
n_Set	[rpm]	Setpoint in speed control mode
Reset	[0|1]	Reset
T_Sample	[s]	Sample time
theta	[rad]	Mechanic motor angle
theta_offset	[rad]	Theta offset

Name	Unit	Description
Trq_Set	[Nm]	Setpoint in torque control mode
Trq_Limit	[Nm]	Torque limit
V_d_set	[V]	Setpoint in voltage control mode
V_DCLink	[V]	DC link voltage
V_DCLink_Limit	[V]	DC link limit
V_q_set	[V]	Setpoint in voltage control mode

Outports

The following table shows the outports:

Name	Unit	Description
ASMSignalBus	[]	Signal bus that contains signals of ASM components. Refer to ASMSignalBus (ASM User Guide 🕮).
v[a;b;c]	[V]	Reference voltages

Parameter

The following table shows the block parameters:

Name	Unit	Description
Const_I_Max	[A]	Maximum current
Const_Id_Fieldweakening	[A]	Maximum field-weakening current
Const_Ld_Stator	[H]	Stator inductance in direct axis Lsd
Const_Lq_Stator	[H]	Stator inductance in quadrature axis Lsq
Const_PolePairs	[]	Number of pole pairs
Const_Psi	[Wb]	Flux induced by magnet Psi
SW_Fieldweakening	[1|2]	Switch for field-weakening mode: ▪ 1: Off ▪ 2: On
Sw_MTPA	[0|1]	Switch for maximum torque per ampere (MTPA): ▪ 0: No ▪ 1: Yes
Sw_PowerInvariant	[1|2]	Switch for transformation method power invariant: ▪ 1: On (invariant with respect to power) ▪ 2: Off (invariant with respect to reference values)
Sw_StarDeltaConfig	[1|2]	Switch for machine configuration: ▪ 1: Star ▪ 2: Delta

Related topics

References

History of the PMSM_CONTROLLER_BASIC Block 526
PI Controller 25

PMSM Controller Three Level

Description

The PMSM controller three level combines the basic PMSM controller and the three level space vector modulator.

The next illustration shows the Simulink representation of the PMSM_CONTROLLER_THREE_LEVEL block:

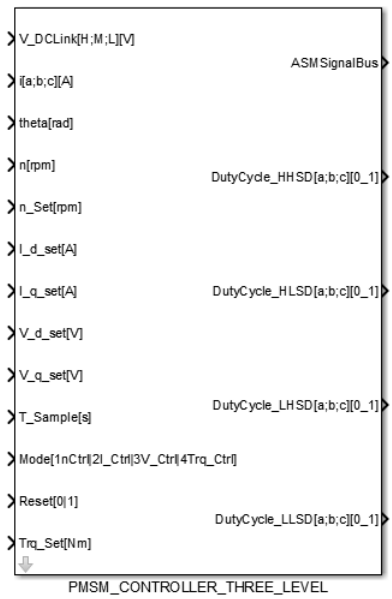

Inports

The following table shows the inports:

Name	Unit	Description
I_d_set	[A]	Setpoint in current control mode
I_q_set	[A]	Setpoint in current control mode
i[a;b;c]	[A]	Line currents of the controlled motor
Mode	[1|2|3|4]	Switch between control modes: ▪ 1: Speed control ▪ 2: Current control ▪ 3: Voltage control ▪ 4: Torque control

Name	Unit	Description
n	[rpm]	Motor speed
n_Set	[rpm]	Setpoint in speed control mode
Reset	[0|1]	Reset
Trq_Set	[Nm]	Setpoint in torque control mode
T_Sample	[s]	Sample time
theta	[rad]	Mechanic motor angle
V_d_set	[V]	Setpoint in voltage control mode
V_q_set	[V]	Setpoint in voltage control mode
V_DCLink	[V]	DC link voltage

Outports

The following table shows the outports:

Name	Unit	Description
ASMSignalBus	[]	Signal bus that contains signals of ASM components. Refer to ASMSignalBus (ASM User Guide 🕮).
DutyCycle_HHSD[a;b;c]	[0_1]	Duty cycle of the upper high-side driver (phase a;b;c)
DutyCycle_HLSD[a;b;c]	[0_1]	Duty cycle of the upper low-side driver (phase a;b;c)
DutyCycle_LHSD[a;b;c]	[0_1]	Duty cycle of the lower low-side driver (phase a;b;c)
DutyCycle_LLSD[a;b;c]	[0_1]	Duty cycle of the lower low-side driver (phase a;b;c)

Parameter

The following table shows the block parameters:

Name	Unit	Description
Const_f_Set	[Hz]	Frequency of output voltages (V_Ctrl mode)
Const_Id_Fieldweakening	[A]	Maximum field-weakening current
Const_I_Max	[A]	Maximum current
Const_Ki_id	[]	Ki id controller
Const_Ki_iq	[]	Ki iq controller
Const_Ki_fw	[]	Ki fieldweakening controller
Const_Ki_n	[]	Ki n controller
Const_Kp_id	[]	Kp id controller
Const_Kp_iq	[]	Kp iq controller
Const_Kp_fw	[]	Kp fieldweakening controller
Const_Kp_n	[]	Kp n controller

Name	Unit	Description
Const_Ld_Stator	[H]	Stator inductance in direct axis Lsd
Const_Limit_id	[A]	Maximum current in direct axis
Const_Limit_iq	[A]	Maximum current in quadrature axis
Const_Limit_n	[rpm]	Speed limit
Const_Limit_Trq	[Nm]	Torque limit
Const_Limit_u	[V]	Maximum output voltage
Const_Lq_Stator	[Wb]	Stator inductance in quadrature axis Lsq
Const_PolePairs	[]	Number of pole pairs
Const_Psi	[]	Flux induced by magnet Psi
Const_theta_offset	[rad]	Theta offset
SW_Fieldweakening	[1|2]	Switch field-weakening mode ▪ 1: Off ▪ 2: On
Sw_MTPA	[0|1]	Switch for maximum torque per ampere (MTPA) ▪ 0: No ▪ 1: Yes
Sw_PowerInvariant	[1|2]	Switch for transformation method power invariant: ▪ 1: On (invariant with respect to power) ▪ 2: Off (invariant with respect to reference values)
Sw_StarDeltaConfig	[1|2]	Switch for machine configuration ▪ 1: Star ▪ 2: Delta

Related topics

References

History of the PMSM_CONTROLLER_THREE_LEVEL Block..... 526
PMSM Controller Three Level (ModelDesk Parameterizing 🕮)
Three Level Space Vector Modulator..... 46

SCIM Controller

Description

The SCIM controller combines the basic SCIM controller and the space vector modulator. For more information, refer to SCIM Controller Basic on page 40 and Space Vector Modulator on page 45.

The next illustration shows the Simulink representation of the SCIM_CONTROLLER block:

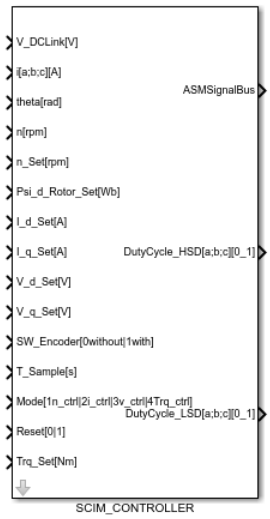

Inports

The following table shows the inports:

Name	Unit	Description
I_d_Set	[A]	Setpoint for the direct component of the stator current during current control mode
i[a;b;c]	[A]	Line currents of the controlled motor
I_q_Set	[A]	Setpoint for the quadrature component of the stator current during current control mode
Mode	[1|2|3|4]	Switch between the control modes: ▪ 1: Speed control ▪ 2: Current control ▪ 3: Voltage control ▪ 4: Torque control
n	[rpm]	Motor speed
n_Set	[rpm]	Setpoint for the speed during speed control mode
Psi_d_Rotor_Set	[Wb]	Setpoint for the flux in speed control mode
Reset	[0|1]	Reset
SW_Encoder	[0|1]	Switch for encoder ▪ 0: Controlled machine has no encoder ▪ 1: Controlled machine has an encoder
T_Sample	[s]	Sample time
theta	[rad]	Mechanical motor angle ϑ between zero and two pi
Trq_Set	[Nm]	Setpoint in torque control mode
V_d_Set	[V]	Setpoint for the direct component of the motor voltage during voltage control mode
V_DCLink	[V]	DC link voltage

Name	Unit	Description
V_q_Set	[V]	Setpoint for the quadrature component of the motor voltage during voltage control mode

Outports

The following table shows the outports:

Name	Unit	Description
ASMSignalBus	[]	Signal bus that contains signals of ASM components. Refer to ASMSignalBus (ASM User Guide 🕮).
DutyCycle_HSD[a;b;c]	[0_1]	Duty cycle of the high-side driver (phase a;b;c)
DutyCycle_LSD[a;b;c]	[0_1]	Duty cycle of the low-side driver (phase a;b;c)

Parameters

The following table shows the parameters:

Name	Unit	Description
Const_f_Set	[Hz]	Setpoint for the frequency of the motor voltages during voltage control mode
Const_Ki_id	[]	Integral gain of the d-current controller
Const_Ki_iq	[]	Integral gain of the q-current controller
Const_Ki_n	[]	Speed controller's integral gain
Const_Ki_psi	[]	Proportional gain of the q-current controller
Const_Kp_id	[]	Proportional gain of the d-current controller
Const_Kp_iq	[]	Proportional gain of the q-current controller
Const_Kp_n	[]	Speed controller's proportional gain
Const_Kp_psi	[]	Flux controller's proportional gain
Const_L_Mutual	[H]	Mutual inductance L_m
Const_L_Rotor	[H]	Rotor inductance L_r
Const_L_Stator	[H]	Stator inductance L_s
Const_Limit_id	[A]	Maximum current in direct axis
Const_Limit_iq	[A]	Maximum current in quadrature axis
Const_Limit_n	[rpm]	Speed limit
Const_Limit_psi	[Wb]	Flux limit
Const_Limit_Trq	[Nm]	Torque limit
Const_Limit_u	[V]	Maximum output voltage
Const_Min_Field_psi	[Wb]	Minimum fieldweakening flux
Const_PolePairs	[]	Number of pole pairs
Const_R_Rotor	[Ω]	Rotor resistance R_r
Const_R_Stator	[Ω]	Stator resistance R_s

Name	Unit	Description
SW_Fieldweakening	[0|1]	Switch for fieldweaking: ▪ 0: Off ▪ 1: On
Sw_PowerInvariant	[1|2]	Switch for transformation method power invariant: ▪ 1: On (invariant with respect to power) ▪ 2: Off (invariant with respect to reference values)
Sw_StarDeltaConfig	[1|2]	Switch machine configuration ▪ 1: Star ▪ 2: Delta

Related topics

References

History of the SCIM_CONTROLLER Block..... 530
SCIM Controller (ModelDesk Parameterizing 🕮)

SCIM Controller Basic

Description

This controller is designed to control a squirrel cage induction machine (SCIM). It contains:

- Two current controllers (d-axis and q-axis)
- Rotor flux estimator
- Flux controller
- Speed controller
- Fieldweakening controller

The controller operates either in or above the base speed range.

The SCIM controller can be configured in different ways:

- Voltage control
- Current control
- Speed control
- Torque control

All parameters and settings can be configured by input ports.

The next illustration shows the Simulink representation of the basic SCIM controller:

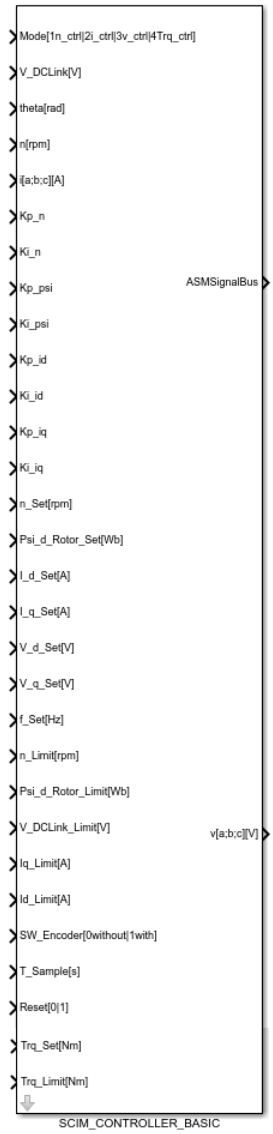

Controller

The following illustration shows the main components of the controller.

These are:

- Fieldweakening controller
- Flux controller
- Speed controller
- Rotor flux estimator
- Current controller

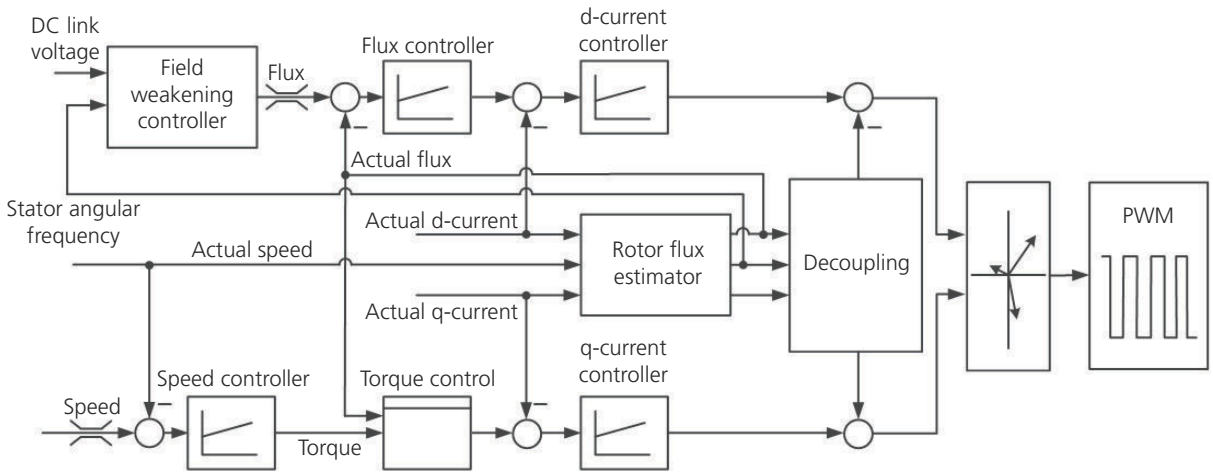

Field-weakening controller The field-weakening controller is a model-based method to determine the flux reference of the flux controller above the base speed range. The flux reference is derived by the Squirrel Cage Induction Machine (SCIM) equations and the constraints of voltage and current.

Note

The flux reference depends on the motor parameters.

Flux controller The flux controller is based on a PI regulator. The setpoint for the flux is limited to the regulator's maximum. The output is a setpoint for the direct component of the stator current.

Speed controller The speed controller is based on a PI regulator. The setpoint for the speed is limited to the regulator's maximum. The output is a setpoint for the torque.

Rotor flux estimator The rotor flux estimator is based on a i_s-**ω**-model in field coordinates, which are obtained from the following equations:

$$\psi_r = \frac{L_m\, i_d}{1 + T_r\, s}$$

$$\omega_s = \omega + \frac{L_m\, i_q}{\psi_r\, T_r}$$

$$\vartheta_s = \frac{\omega_s}{s}$$

where:

ψ_r is the rotor flux
L_m is the mutual inductance
i_d is the d-component of the stator current
T_r is the rotor time constant
ω is the mechanical speed
ω_s is the stator circuit velocity
ϑ_s is the angle of flux-oriented coordinate

i_q is the q-component of the stator current

Because the direct and quadrature components of the stator current are only available after the coordinate transformation, they are also marked as being estimated quantities. The outputs (ψ_r, ω_s, ϑ_s) are estimated quantities, too.

Note

The precision of angle ϑ_s strongly depends on the temperature dependence of the rotor time constant T_r.

Current controller The current controller consists of two controllers, which are based on PI regulators. The decoupling of the d- and q-current controllers and voltage limitation also occur in this block. The current limitations are calculated additionally for a suitable strategy as long as the maximum current magnitude is not reached.

Inports

The following table shows the inports:

Name	Unit	Description
f_Set	[Hz]	Setpoint for the frequency of the motor voltages during voltage control mode
Id_Limit	[A]	Maximum direct component of the stator current
I_d_Set	[A]	Setpoint for the direct component of the stator current during current control mode
Iq_LimitLimit	[A]	Maximum quadrature component of the stator current
I_q_Set	[A]	Setpoint for the quadrature component of the stator current during current control mode
i[a;b;c]	[A]	Line currents of the controlled motor
Ki_id	[]	Integral gain of the d-current controller
Ki_iq	[]	Integral gain of the q-current controller
Ki_n	[]	Speed controller's integral gain
Ki_psi	[]	Flux controller's integral gain
Kp_id	[]	Proportional gain of the d-current controller
Kp_iq	[]	Proportional gain of the q-current controller
Kp_n	[]	Speed controller's proportional gain
Kp_psi	[]	Flux controller's proportional gain
Mode	[1|2|3|4]	Switch between the control modes: ▪ 1: Speed control ▪ 2: Current control ▪ 3: Voltage control ▪ 4: Torque control
n	[rpm]	Motor speed

Name	Unit	Description
n_Limit	[rpm]	Speed limit
n_Set	[rpm]	Setpoint for the speed during speed control mode
Psi_d_Rotor_Limit	[Wb]	Flux limit rotor
Psi_d_Rotor_Set	[Wb]	Setpoint for the flux during speed control mode
Reset	[0|1]	Reset
SW_Encoder	[0|1]	Switch for encoder ▪ 0: Controlled machine has no encoder ▪ 1: Controlled machine has an encoder
T_Sample	[s]	Sample time
theta	[rad]	Mechanical motor angle between zero and two pi
Trq_Limit	[Nm]	Torque limit
Trq_Set	[Nm]	Setpoint in torque control mode
V_d_Set	[V]	Setpoint for the direct component of the motor voltage during voltage control mode
V_DCLink	[V]	DC link voltage
V_DCLink_Limit	[V]	DC link voltage limit
V_q_Set	[V]	Setpoint for the quadrature component of the motor voltage during voltage control mode

Outports

The following table shows the outports:

Name	Unit	Description
ASMSignalBus	[]	Signal bus that contains signals of ASM components. Refer to ASMSignalBus (ASM User Guide 🕮).
v[a;b;c]	[V]	Reference voltages

Parameters

The following table shows the parameters:

Name	Unit	Description
Const_L_Mutual	[H]	Mutual inductance
Const_L_Rotor	[H]	Rotor inductance
Const_L_Stator	[H]	Stator inductance
Const_Min_Field_psi	[Wb]	Minimum fieldweakening flux
Const_PolePairs	[]	Number of pole pairs
Const_R_Rotor	[Ω]	Rotor resistance
Const_R_Stator	[Ω]	Stator resistance
SW_Fieldweakening	[0|1]	Switch for fieldweakening ▪ 0: off ▪ 1: on

Name	Unit	Description
Sw_PowerInvariant	[1|2]	Switch for transformation method power invariant: ▪ 1: On (invariant with respect to power) ▪ 2: Off (invariant with respect to reference values)
Sw_StarDeltaConfig	[1|2]	Switch for machine configuration ▪ 1: Star ▪ 2: Delta

Related topics

References

History of the SCIM_CONTROLLER_BASIC Block..... 531
PI Controller..... 25

Space Vector Modulator

Description

This block presents a space vector modulator, for example, used in PMSM Controller.

The next illustration shows the Simulink representation of a SPACE_VECTOR_MODULATOR block:

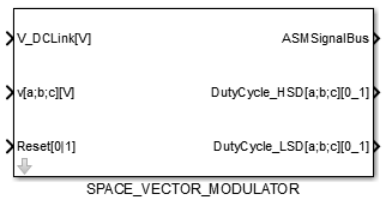

Inports

The following table shows the inports:

Name	Unit	Description
Reset	[0|1]	Reset
V_DCLink	[V]	DC link voltage
v[a;b;c]	[V]	Reference voltages from controller

Outports

The following table shows the outports:

Name	Unit	Description
ASMSignalBus	[]	Signal bus that contains signals of ASM components. Refer to ASMSignalBus (ASM User Guide 🕮).
DutyCycle_HSD[a;b;c]	[0_1]	Duty cycle of the high-side driver (phase a;b;c)
DutyCycle_LSD[a;b;c]	[0_1]	Duty cycle of the low-side driver (phase a;b;c)

Related topics

References

History of the SPACE_VECTOR_MODULATOR Block..... 534

Three Level Space Vector Modulator

Description

This block presents a space vector modulator, for example, used in PMSM Controller Three Level.

The next illustration shows the Simulink representation of a THREE_LEVEL_SPACE_VECTOR_MODULATOR block:

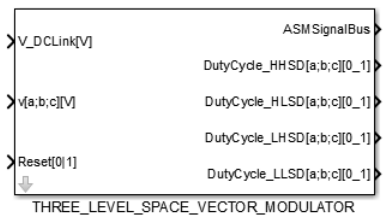

Inports

The following table shows the inports:

Name	Unit	Description
Reset	[0|1]	Reset
V_DCLink	[V]	DC link voltage
vr[a;b;c]	[V]	Reference voltages from controller

Outports

The following table shows the outports:

Name	Unit	Description
ASMSignalBus	[]	Signal bus that contains signals of ASM components. Refer to ASMSignalBus (ASM User Guide 🕮).
DutyCycle_HHSD[a;b;c]	[0_1]	Duty cycle of the upper high-side driver (phase a;b;c)
DutyCycle_HLSD[a;b;c]	[0_1]	Duty cycle of the upper low-side driver (phase a;b;c)
DutyCycle_LHSD[a;b;c]	[0_1]	Duty cycle of the lower high-side driver (phase a;b;c)
DutyCycle_LLSD[a;b;c]	[0_1]	Duty cycle of the lower low-side driver (phase a;b;c)

Related topics

References

History of the THREE_LEVEL_SPACE_VECTOR_MODULATOR Block..... 537
PMSM Controller Three Level..... 35

Electric Machines

Where to go from here

Information in this section

Brushless DC Machine Alpha Beta.....48
If the back EMF is trapezoidal, modeling in alpha-beta-coordinates is best. This kind of machine is known as a Brushless DC (BLDC) machine.

Permanent Magnet Synchronous Machine DQ.....51
The PERMANENT_MAGNET_SYNCHRONOUS_MACHINE_D_Q block contains the model of a permanent magnet synchronous machine (PMSM).

Permanent Magnet Synchronous Machine DQ Nonlinear.....54
This model is a nonlinear permanent magnet synchronous machine (called a PMSM).

Separately Excited DC Machine.....58
The model represents a separately excited DC machine with armature and exciter winding.

Squirrel Cage Asynchronous Machine DQ.....60
This model is a squirrel cage asynchronous machine modeled in the rotor reference frame.

Brushless DC Machine Alpha Beta

Description

The BRUSHLESS_DC_MACHINE_ALPHA_BETA block contains the model of a permanent magnet synchronous machine with sinusoidal or trapezoidal back EMF modeling in alpha-beta coordinates, which is also known as a stator fixed reference frame. As the rotor has no electrical circuit, only the stator windings are modeled in a star connection.

The transformation to the alpha beta reference frame is invariant with respect to reference values. Refer to Park Clarke Transformation on page 161.The following equations describe the mathematical motor model.

$$R_S \cdot \left(T_S \cdot \frac{di_\alpha}{dt} + i_\alpha\right) = v_\alpha - j\psi_P\omega_e$$

$$R_S \cdot \left(T_S \cdot \frac{di_\beta}{dt} + i_\beta\right) = v_\beta - j\psi_P\omega_e$$

$$Trq = \sum_{x=a,b,c} p \cdot K_{m,x} \cdot i_x$$

where:

L_S is the stator inductance

R_S is the stator winding resistance

ψ_p is the flux induced by the magnet

p is the number of pole pairs

T_S is the stator time constant

$K_{m,x}$ is the back EMF shape function

The next figure shows the equivalent circuit diagram of the model on the alpha- and beta-axis with sinusoidal or trapezoidal back EMF.

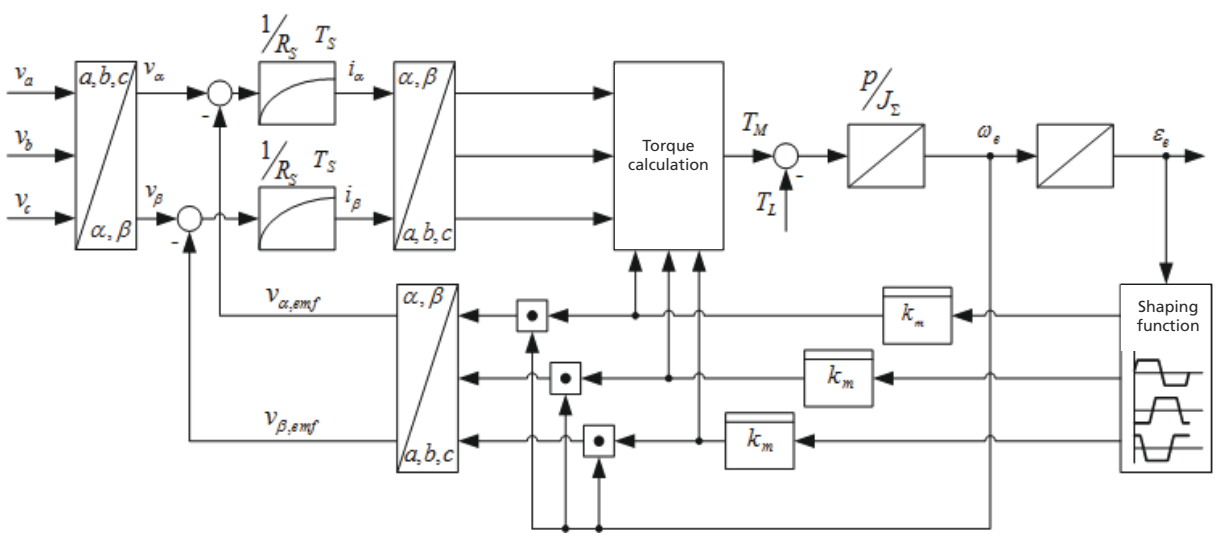

The next illustration shows the Simulink representation of the Brushless DC machine:

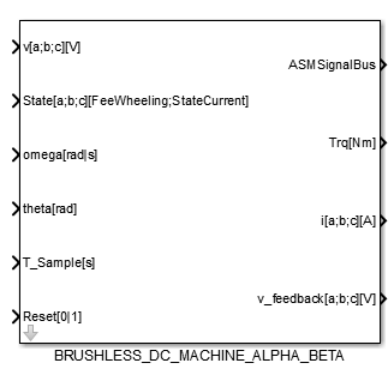

Inports

The following table shows the inports:

Name	Unit	Description
omega	[rad/s]	Mechanical angular velocity of the motor

Name	Unit	Description
State	[]	Inverter state
T_Sample	[s]	Sample time
theta	[rad]	Mechanical angle of the rotor
v[a;b;c]	[V]	Supply voltages [a;b;c]
Reset	[0|1]	Reset

Outports

The following table shows the outports:

Name	Unit	Description
ASMSignalBus	[]	Signal bus that contains signals of ASM components. Refer to ASMSignalBus (ASM User Guide 🕮).
i[a;b;c]	[A]	Line currents [a;b;c]
Trq	[Nm]	Motor torque
V_feedback[a;b;c]	[V]	Feedback voltage [a;b;c] depends on the inverter state (EMF or Phase floating)

Parameter

The following table shows the block parameters:

Name	Unit	Description
Const_Back_EMF	Vs	Back EMF constant
Const_L_Stator	[H]	Stator inductance L_s
Const_PolePairs	[]	Number of pole pairs
Const_R_Stator	[Ohm]	Stator resistance R_s
Map_BackEMF_a	[0_1]	Back EMF a gain (separate table) = f(Theta[deg])
Map_BackEMF_abc	[0_1]	Back EMF abc gain (single table) = f(Theta[deg])
Map_BackEMF_b	[0_1]	Back EMF b gain (separate table) = f(Theta[deg])
Map_BackEMF_c	[0_1]	Back EMF c gain (separate table) = f(Theta[deg])
Sw_EMFMethod	[1|2|3]	Switch EMF waveform ▪ 1: Sinus ▪ 2: Single table ▪ 3: Separate table
Sw_IntegrationMethod	[1|2|3|4]	Switch integration method ▪ 1: Mixed Forward and Backward Euler ▪ 2: Backward Euler ▪ 3: Tustin ▪ 4: Mixed Tustin and Backward Euler

Name	Unit	Description
Sw_PowerInvariant	[1|2]	Switch transformation method power invariant: ▪ 1: On (invariant with respect to power) ▪ 2: Off (invariant with respect to reference values)

The motor parameters are described in the table above. The parameter integration method selects between the Backward Euler, Tustin and mixed integration algorithms. For more information about the integration method, refer to Numeric Solver on page 545.

Related topics

References

Brushless DC Machine (ModelDesk Parameterizing 🕮)
History of the BRUSHLESS_DC_MACHINE_ALPHA_BETA Block..... 518

Permanent Magnet Synchronous Machine DQ

Description

The PERMANENT_MAGNET_SYNCHRONOUS_MACHINE_D_Q block contains the model of a permanent magnet synchronous machine (PMSM). As the rotor has no electrical circuit, only the stator windings can be modeled either in a star or in a delta configuration. The generated back EMF is sinusoidal, so that the machine is modeled in dq-coordinates (also known as rotor reference frame).

The following illustration shows the equivalent circuit diagram of the model on the d- and q-axis.

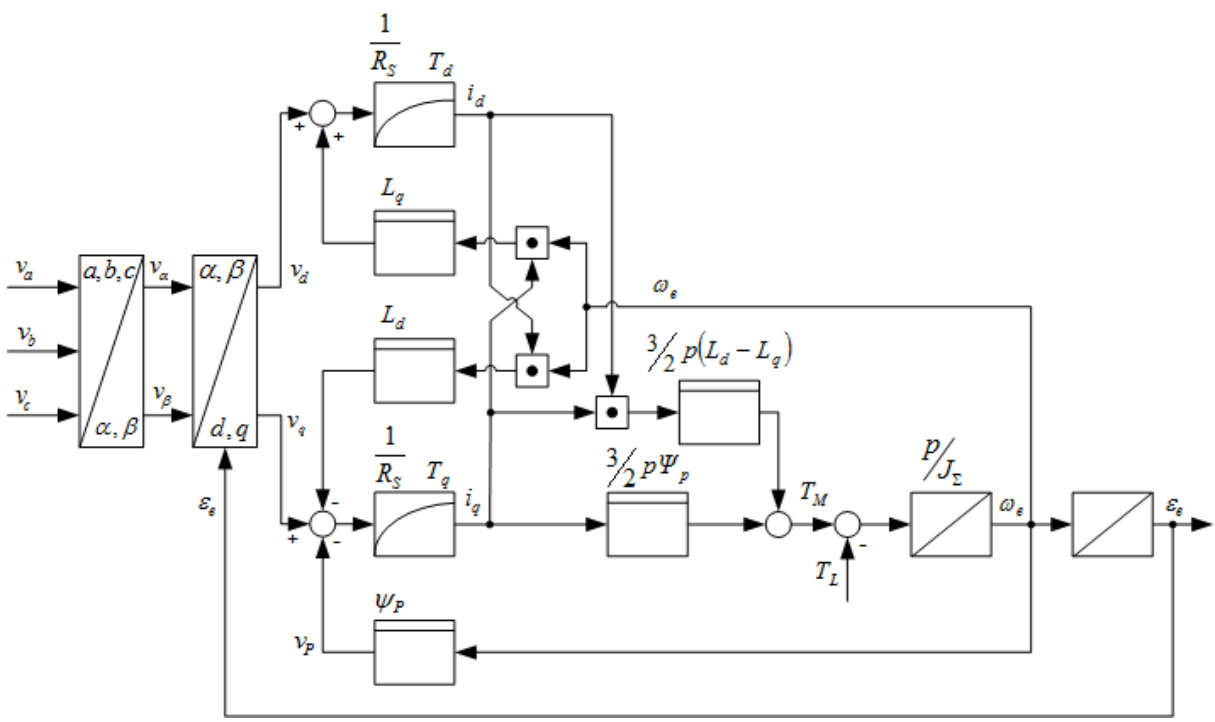

The PMSM is modeled using *dq* notation in the synchronously rotating reference frame. The transformation to the dq reference frame is invariant with respect to reference values. Refer to Park Clarke Transformation on page 161.The following equation describes the motor mathematical model.

$$L_d \frac{di_d}{dt} = v_d - R_S\, i_d + L_q\, \omega_e\, i_q$$

$$L_q \frac{di_q}{dt} = v_q - R_S\, i_q - L_d\, \omega_e\, i_d - \psi_P\, \omega_e$$

$$Trq = \frac{3}{2}\, p\left[\psi_P\, i_q + \left(L_d - L_q\right) i_d\, i_q\right]$$

where:

L_d	is the direct axis inductance
L_q	is the quadrature axis inductance
R_S	is the stator winding resistance
ψ_p	is the flux induced by the magnet
p	is the number of pole pairs

The next illustration shows the Simulink representation of the block:

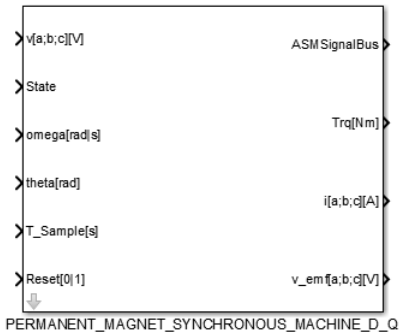

Inports

The following table shows the inports:

Name	Unit	Description
omega	[rad/s]	Mechanical angular velocity of the motor
State	[]	Inverter state
T_Sample	[s]	Sample time
theta	[rad]	Mechanical angle of the rotor
v[a;b;c]	[V]	Supply voltages [a;b;c]
Reset	[0|1]	Reset

Outports

The following table shows the outports:

Name	Unit	Description
ASMSignalBus	[]	Signal bus that contains signals of ASM components. Refer to ASMSignalBus (ASM User Guide 🕮).
i[a;b;c]	[A]	Line current [a;b;c]
Trq	[Nm]	Motor torque
v_emf[a;b;c]	[V]	Back EMF voltage [a;b;c]

Parameter

The following table shows the block parameters:

Name	Unit	Description
Const_Ld_Stator	[H]	Stator inductance in direct axis L_d
Const_Lq_Stator	[H]	Stator inductance in quadrature axis L_q
Const_NominalCurrent	[A]	Nominal motor current
Const_PolePairs	[]	Number of pole pairs
Const_Psi	[Wb]	Flux induced by magnet Psi
Const_R_Stator	[Ω]	Stator resistance R_s
Map_Factor_Ld_Stator	[]	Table for table-based L_d inductance

Name	Unit	Description
Map_Factor_Lq_Stator	[]	Table for table-based L_q inductance
Map_Factor_Psi	[]	Table for table-based magnetic flux
Sw_IntegrationMethod	[1|2|3|4]	Switch integration method ▪ 1: Mixed Forward and Backward Euler ▪ 2: Backward Euler ▪ 3: Tustin ▪ 4: Mixed Tustin and Backward Euler
Sw_MachineCharacteristic	[1|2]	Switch machine characteristic ▪ 1: Linear ▪ 2: Table-based
Sw_PowerInvariant	[1|2]	Switch transformation method power invariant: ▪ 1: On (invariant with respect to power) ▪ 2: Off (invariant with respect to reference values)
Sw_StarDeltaConfig	[1|2]	Switch for machine configuration ▪ 1: Star ▪ 2: Delta

The motor parameters are described in the table above. The parameter integration method selects between the Backward Euler, Tustin and mixed integration algorithms. For more information about the integration method, refer to Numeric Solver on page 545.

Related topics

References

History of the PERMANENT_MAGNET_SYNCHRONOUS_MACHINE_D_Q Block..... 524
Synchronous Machine (ModelDesk Parameterizing 🕮)

Permanent Magnet Synchronous Machine DQ Nonlinear

Description

This model is a nonlinear permanent magnet synchronous machine (called a PMSM). As the rotor has no electrical circuit, only the stator windings can be modeled either in a star or in a delta configuration. The generated back EMF has a sinusoidal shape so the machine is modeled in dq coordinates (also known as the rotor reference frame).

The following illustration shows the equivalent circuit diagram of the model in the d- and q-axis.

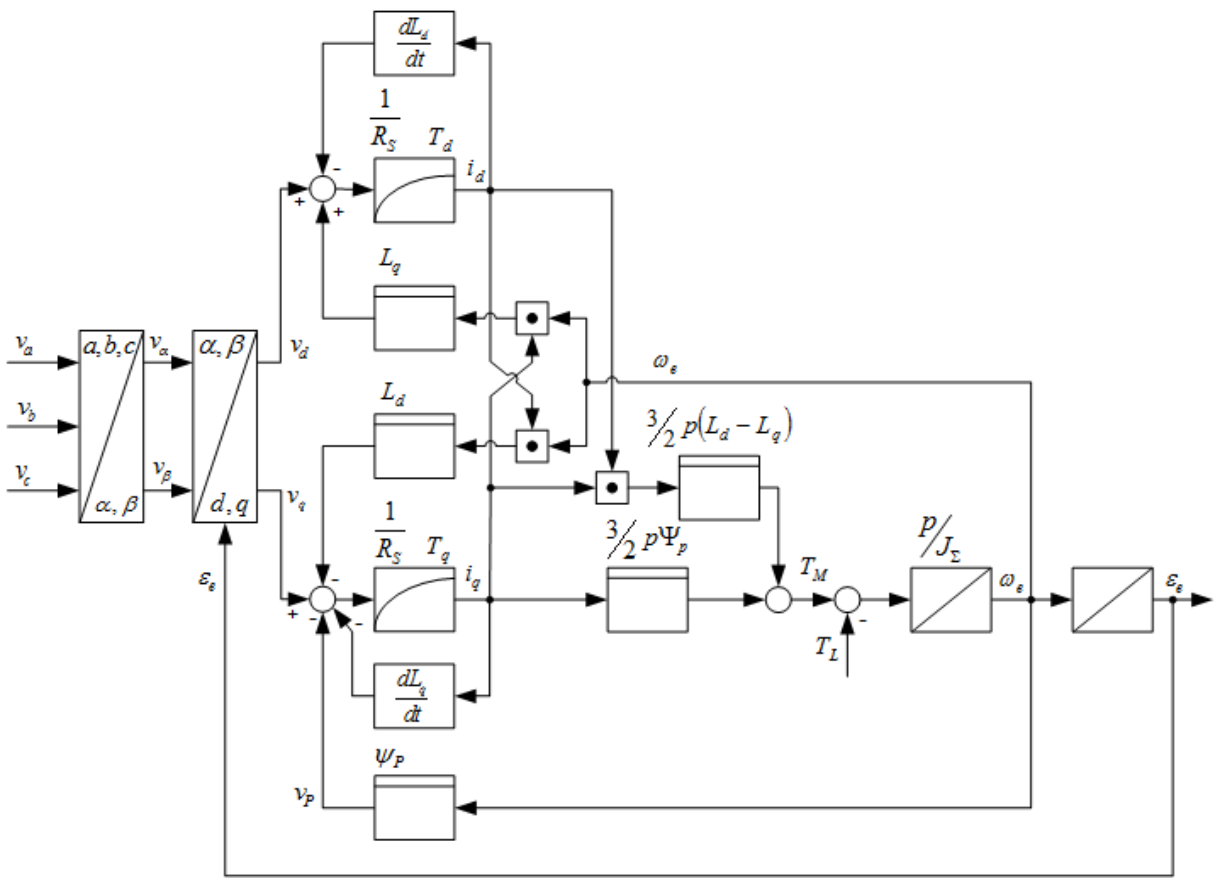

The PMSM is modeled using dq notation in the synchronously rotating reference frame. The transformation to the dq reference frame can be calculated invariant with respect to reference values or invariant with respect to power. The transformation method is set via a parameter. Refer to Park Clarke Transformation on page 161.The following equation describes the motor mathematical model.

$$L_d \frac{di_d}{dt} + i_d \frac{dL_d}{dt} = v_d - R_S\, i_d + L_q\, \omega_e\, i_q$$

$$L_q \frac{di_q}{dt} + i_q \frac{dL_q}{dt} = v_q - R_S\, i_q - L_d\, \omega_e\, i_d - \psi_P\, \omega_e$$

$$Trq = \frac{3}{2}\, p\left[\psi_P\, i_q + \left(L_d - L_q\right) i_d\, i_q\right]$$

with

$$\frac{dL_d}{dt} = \frac{\partial L_d}{\partial i_q}\frac{d}{dt} i_q + \frac{\partial L_d}{\partial i_d}\frac{d}{dt} i_d$$

$$\frac{dL_q}{dt} = \frac{\partial L_q}{\partial i_q}\frac{d}{dt}i_q + \frac{\partial L_q}{\partial i_d}\frac{d}{dt}i_d$$

where:

L_d	is the direct axis inductance
L_q	is the quadrature axis inductance
R_S	is the stator winding resistance
ψ_p	is the flux induced by the magnet
p	is the number of pole pairs

To represent the nonlinear behavior of the inductance, there are manipulation look-up tables (3-D) for L_d and L_q. The inputs of these tables are the normed direct and quadrature currents (in relation to the nominal motor current).

The next illustration shows the Simulink representation of the PMSM_D_Q_NONLINEAR block:

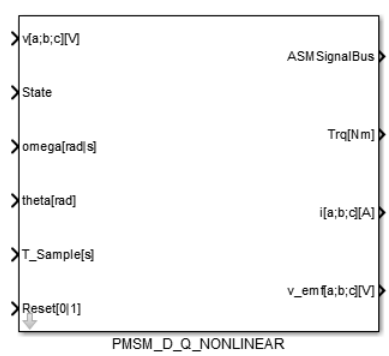

Inports

The following table shows the inports:

Name	Unit	Description
omega	[rad/s]	Mechanical angle speed of the motor
Reset	[0|1]	Reset
State	[]	Inverter state
theta	[rad]	Mechanical angle of the motor
T_Sample	[s]	Sample time
v[a;b;c]	[V]	Supply voltages [a;b;c]

Outports

The following table shows the outports:

Name	Unit	Description
ASMSignalBus	[]	Signal bus that contains signals of ASM components. Refer to ASMSignalBus (ASM User Guide 🕮).
i[a;b;c]	[A]	Line currents [a;b;c]

Name	Unit	Description
Trq	[Nm]	Motor torque
V_emf[a;b;c]	[V]	Back EMF Voltage [a;b;c]

Parameters

The following table shows the block parameters:

Name	Unit	Description
Const_Ld	[H]	Stator inductance in direct axis Lsd
Const_Lq	[H]	Stator inductance in quadrature axis Lsq
Const_NominalCurrent	[A]	Nominal motor current
Const_PolePairs	[]	Number of pole pairs
Const_Psi	[Wb]	Flux induced by magnet Psi
Const_Rs	[Ω]	Stator resistance Rs
Map_Factor_Ld	[]	Table with factor for nonlinear Ld inductance: Ld factor = f(id/inom[],iq/inom[])
Map_Factor_Lq	[]	Table with factor for nonlinear Lq inductance: Lq factor = f(id/inom[],iq/inom[])
Sw_IntegrationMethod	[1|2]	Switch integration method ▪ 1: Mixed Forward and Backward Euler ▪ 2: Mixed Tustin and Backward Euler
Sw_PowerInvariant	[1|2]	Switch transformation method power invariant ▪ 1: On (invariant with respect to power) ▪ 2: Off (invariant with respect to reference values)
Sw_StarDeltaConfig	[1|2]	Switch for machine configuration ▪ 1: Star ▪ 2: Delta

The motor parameters are described in the table above. The parameter integration method select between mixed Forward Euler, Backward Euler and Tustin integration algorithms. For more information about the integration method, refer to Numeric Solver on page 545.

Related topics

References

History of the PMSM_D_Q_NONLINEAR Block..... 527
Synchronous Machine Nonlinear (ModelDesk Parameterizing 🕮)

Separately Excited DC Machine

Description

The model represents a separately excited DC machine with armature and exciter winding.

The next illustration shows the equivalent circuit diagram of the model.

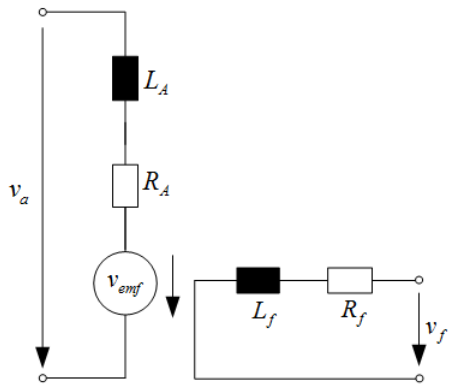

$$L_f \frac{di_f}{dt} = v_f - R_f\, i_f$$

$$L_a \frac{di_a}{dt} = v_a - R_a\, i_a - v_{emf}$$

$$Trq = L_{af}\, i_f\, i_a$$

$$v_{emf} = L_{af}\, i_f\, \omega_m$$

The multiplication L_{af} represents the field-to-armature flux linkages.

where:

v_a	is the armature voltage
v_f	is the field voltage
v_{emf}	is the EMF voltage
i_a	is the armature current
i_f	is the field current
Trq	is the motor torque
R_a	is the armature circuit resistance
L_a	is the armature circuit inductance
R_f	is the field circuit resistance
L_f	is the field circuit inductance
L_{af}	is the armature-field mutual inductance
ω_m	is the rotational speed

The next illustration shows the control diagram of the SEPARATELY_EXCITED_DC_MACHINE block.

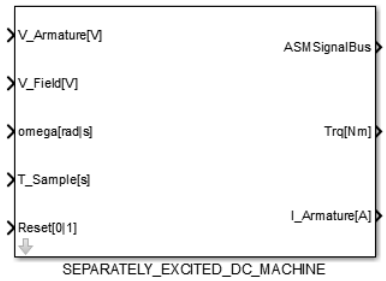

Inports

The following table shows the inports:

Name	Unit	Description
omega	[rad/s]	Motor speed
Reset	[0|1]	Reset
T_Sample	[s]	Simulation sample time
V_Armature	[V]	Armature voltage
V_Field	[V]	Field voltage

Outports

The following table shows the outports:

Name	Unit	Description
ASMSignalBus	[]	Signal bus that contains signals of ASM components. Refer to ASMSignalBus (ASM User Guide 🕮).
I_Armature	[A]	Armature current
Trq	[Nm]	Motor torque

Parameter

The following table shows the block parameters:

Name	Unit	Description
Const_I_Init_Field	[A]	Field initial current
Const_L_Amature	[H]	Armature inductance L_a
Const_L_Field	[H]	Field inductance L_f
Const_L_Mutual	[H]	Armature-field mutual inductance L_{af}
Const_R_Amature	[Ω]	Armature resistance R_a
Const_R_Field	[Ω]	Field resistance R_f
Sw_IntegrationMethod	[1|2]	Integration method: ▪ 1: Forward Euler ▪ 2: Backward Euler

The motor parameters are described in the table above. The parameter integration method selects between the Forward and Backward Euler integration algorithms. For more information about the integration method, refer to Numeric Solver on page 545.

Related topics

References

History of the SEPARATELY_EXCITED_DC_MACHINE Block..... 531
Separately Excited DC Machine (ModelDesk Parameterizing 🕮)

Squirrel Cage Asynchronous Machine DQ

Description

This model is a squirrel cage asynchronous machine modeled in the rotor reference frame.

The squirrel cage asynchronous machine is modeled using the field-orientated coordinate system (dq-coordinates) known as the rotor reference frame. The following equations describe its continuous state-space model.

$$\frac{di_{Sd}}{dt} = -\left(\frac{1}{M \cdot T_S} + \frac{1-M}{M \cdot T_R}\right) \cdot i_{Sd} + \omega_S \cdot i_{Sq} + \frac{1-M}{M \cdot T_R} \cdot \psi'_{Rd} + \frac{1-M}{M} \cdot \omega \cdot \psi'_{Rq} + \frac{1}{M \cdot L_S} \cdot v_{Sd}$$

$$\frac{di_{Sq}}{dt} = -\left(\frac{1}{M \cdot T_S} + \frac{1-M}{M \cdot T_R}\right) \cdot i_{Sq} - \omega_S \cdot i_{Sd} + \frac{1-M}{M \cdot T_R} \cdot \psi'_{Rq} - \frac{1-M}{M} \cdot \omega \cdot \psi'_{Rd} + \frac{1}{M \cdot L_S} \cdot v_{Sq}$$

$$\frac{d\psi'_{Rd}}{dt} = \frac{1}{T_R} i_{Sd} - \frac{1}{T_R} \cdot \psi'_{Rd} + (\omega_S - \omega) \cdot \psi'_{Rq}$$

$$\frac{d\psi'_{Rq}}{dt} = \frac{1}{T_R} i_{Sq} - \frac{1}{T_R} \cdot \psi'_{Rq} - (\omega_S - \omega) \cdot \psi'_{Rd}$$

$$Trq = \frac{3}{2} p \cdot \left((1-M) \cdot L_S \cdot \psi'_{Rd} \cdot i_{Sq}\right)$$

With:

$$M = 1 - \frac{L_M^2}{L_R \cdot L_S};\ T_R = \frac{L_R}{R_R};\ T_S = \frac{L_S}{R_S}$$

$$\psi'_{Rd} = \frac{\psi_{Rd}}{L_M};\ \psi'_{Rq} = \frac{\psi_{Rq}}{L_M}$$

The following illustration shows the equivalent circuit diagram of the model by rewriting the state equations above into the stator, rotor voltage's d- and q-components and taking into account the orientation of the rotor flux as follows:

$$v_{Sd} = R_S \cdot i_{Sd} + M \cdot L_S \cdot \frac{di_{Sd}}{dt} - M \cdot \omega_S \cdot L_S \cdot i_{Sq} + \frac{L_M}{L_R} \cdot \frac{d\psi_{Rd}}{dt}$$

$$v_{Sq} = R_S \cdot i_{Sq} + M \cdot L_S \cdot \frac{di_{Sq}}{dt} + M \cdot \omega_S \cdot L_S \cdot i_{Sd} + \omega_S \cdot \frac{L_M}{L_R} \cdot \psi_{Rd}$$

$$0 = T_R \cdot \frac{d\psi_{Rd}}{dt} + \psi_{Rd} - L_M \cdot i_{Sd}$$

$$0 = i_{Sq} - \omega_R \cdot \frac{L_R}{R_R \cdot L_M} \cdot \psi_{Rd}$$

$$Trq = \frac{3}{2} \cdot p \cdot \frac{L_M}{L_R} \cdot \psi_{Rd} \cdot i_{Sq}$$

With the orientation of the rotor flux:

$$\psi_{Rd} = \psi\,,\ \psi_{Rq} = 0$$

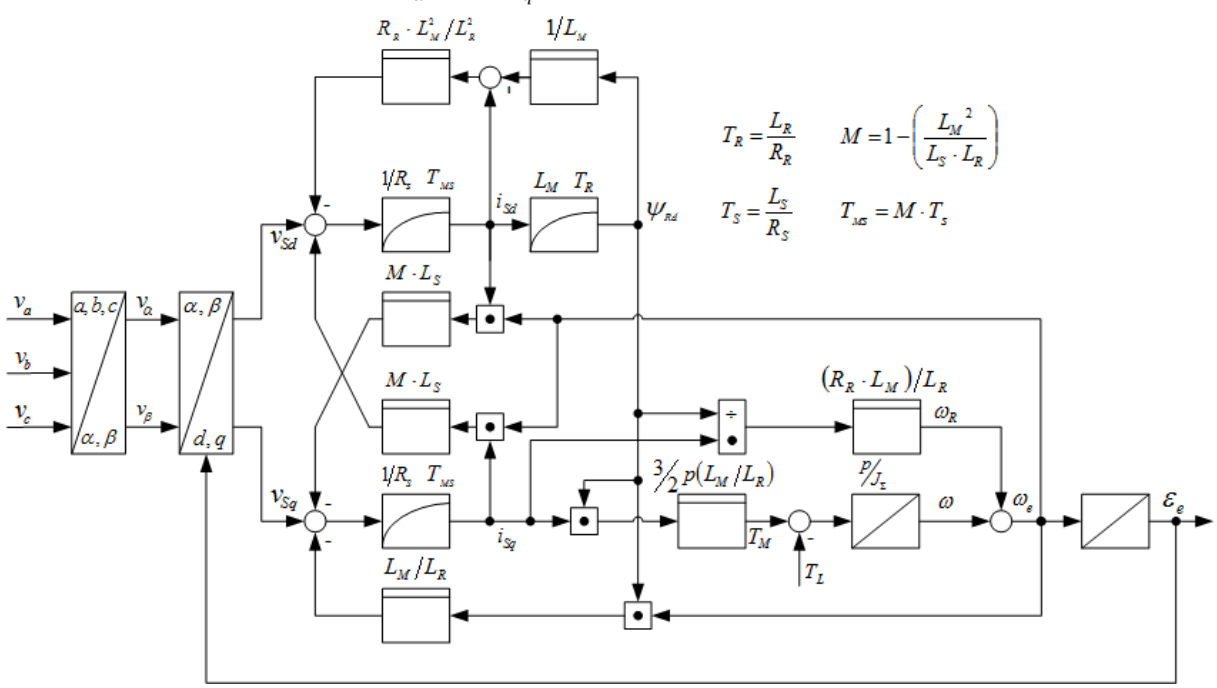

where:

L_S is the stator inductance
L_R is the rotor inductance
L_M is the mutual inductance
R_S is the stator winding resistance
R_R is the rotor winding resistance
ω_e is the angular speed of stator
ω is the mechanic angular velocity
ω_R is the angular speed of rotor
ψ_{Rd} is the rotor flux in direct axis
ψ_{Rq} is the rotor flux in quadrature axis
p is the number of pole pairs
M is the total leakage factor
T_s is the stator time constant
T_R is the rotor time constant

The following illustration shows the Simulink representation of the SQUIRREL_CAGE_ASYNCHRONOUS_MACHINE_D_Q block:

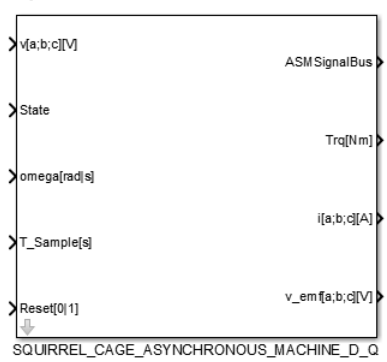

Inports

The following table shows the inports:

Name	Unit	Description
omega	[rad/s]	Mechanical angle velocity of the motor
State	[]	Inverter state
T_Sample	[s]	Sample time
v[a;b;c]	[V]	Supply voltages [a;b;c]
Reset	[0|1]	Reset

Outports

The following table shows the outports:

Name	Unit	Description
ASMSignalBus	[]	Signal bus that contains signals of ASM components. Refer to ASMSignalBus (ASM User Guide 🕮).
i[a;b;c]	[A]	Line currents [a;b;c]

Name	Unit	Description
Trq	[Nm]	Motor torque
v_emf[a;b;c]	[V]	Back EMF voltage [a;b;c]

Parameters

The following table shows the block parameters:

Name	Unit	Description
Const_L_Mutual	[H]	Mutual inductance
Const_L_Rotor	[H]	Rotor inductance
Const_L_Stator	[H]	Stator inductance
Const_PolePairs	[]	Number of pole pairs
Const_R_Rotor	[Ω]	Rotor resistance
Const_R_Stator	[Ω]	Stator resistance
Sw_IntegrationMethod	[1|2|3]	Switch integration method ▪ 1: Backward Euler ▪ 2: Tustin ▪ 3: Mixed Tustin and Backward Euler
Sw_PowerInvariant	[1|2]	Switch transformation method power invariant: ▪ 1: On (invariant with respect to power) ▪ 2: Off (invariant with respect to reference values)
Sw_StarDeltaConfig	[1|2]	Switch for machine configuration ▪ 1: Star ▪ 2: Delta

The motor parameters are described in the table above. The Sw_IntegrationMethod parameter selects between the Backward Euler, Tustin, and mixed integration algorithm. For more information about the integration method, refer to Numeric Solver on page 545.

Related topics

References

Asynchronous Machine (ModelDesk Parameterizing 🕮)
Squirrel Cage Asynchronous Machine DQ 60

Power Electronics

Where to go from here

Information in this section

Three-Level Three-Phase Inverter 64
The THREE_LEVEL_THREE_PHASE_INVERTER block implements a three-phase power converter that consists of twelve power switches connected in a bridge configuration.

Three-Phase DCM Inverter 67
The THREE_PHASE_DCM_INVERTER block implements a three-phase power converter that consists of six power switches.

Three-Phase Inverter 72
The THREE_PHASE_INVERTER block implements a three-phase power converter that consists of six power switches connected in a bridge configuration.

Three-Phase Rectifier 75
The THREE_PHASE_RECTIFIER block implements a three-phase power rectifier that consists of up to six power diodes connected in a bridge configuration.

Three-Level Three-Phase Inverter

Description

The THREE_LEVEL_THREE_PHASE_INVERTER block implements a three-phase power converter that consists of twelve power switches connected in a bridge configuration. The type of power switch (IGBT or MOSFET) is selectable. The three-level three-phase inverter contains 3 three-level half-bridge inverters.

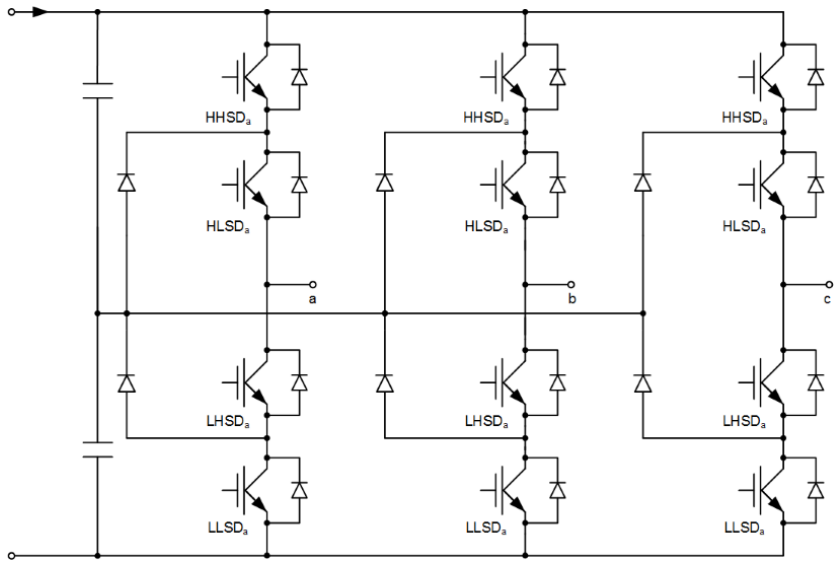

The next illustration shows the Simulink representation of the THREE_LEVEL_THREE_PHASE_INVERTER block:

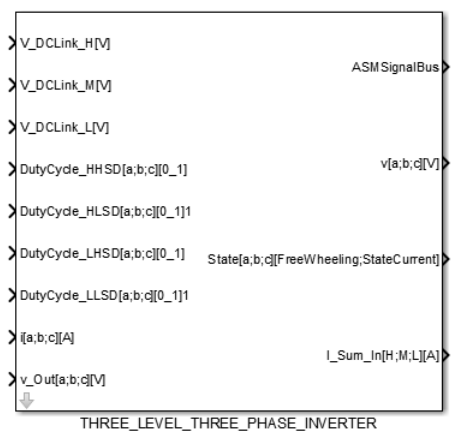

Inports

The following table shows the inports:

Name	Unit	Description
DutyCycle_HHSD[a;b;c]	[0_1]	Duty cycle of the upper high-side driver (phase a;b;c)
DutyCycle_HLSD[a;b;c]	[0_1]	Duty cycle of the upper low-side driver (phase a;b;c)
DutyCycle_LHSD[a;b;c]	[0_1]	Duty cycle of the lower high-side driver (phase a;b;c)
DutyCycle_LLSD[a;b;c]	[0_1]	Duty cycle of the lower low-side driver (phase a;b;c)
i[a;b;c]	[A]	Line currents of the connected motor
V_DCLink_H	[V]	Input of high DC link voltage

Name	Unit	Description
V_DCLink_L	[V]	Input of the low DC link voltage
V_DCLink_M	[V]	Input of the medium DC link voltage
v_Out[a;b;c]	[V]	Output voltage of the connected motor with open gates

Outports

The following table shows the outports:

Name	Unit	Description
ASMSignalBus	[]	Signal bus that contains signals of ASM components. Refer to ASMSignalBus (ASM User Guide 🕮).
I_Sum_In_H	[A]	Inverter bridge current drain high side
I_Sum_In_L	[A]	Inverter bridge current drain low side
State	[]	Signal bus with two signals: Freewheeling ▪ 0: No freewheeling ▪ 1: Freewheeling State current ▪ 1: Negative ▪ 2: Floating ▪ 3: Positive
v[a;b;c]	[V]	Calculated supply voltages

Parameter

The following table shows the block parameters:

Name	Unit	Description
Const_I_Min_PE_a	[A]	The minimum current flows in the switch of inverter leg a. If the current is lower than this threshold, it will be treated as zero. This parameter is only used if no gate times are measured.
Const_I_Min_PE_b	[A]	The minimum current flows in the switch of inverter leg b. If the current is lower than this threshold, it will be treated as zero. This parameter is only used if no gate times are measured.
Const_I_Min_PE_c	[A]	The minimum current flows in the switch of inverter leg c. If the current is lower than this threshold, it will be treated as zero. This parameter is only used if no gate times are measured.
Const_Vf_Diode_a	[V]	The absolute value of the diode forward voltage drop of inverter leg a. It must be defined as a positive value.

Name	Unit	Description
Const_Vf_Diode_b	[V]	The absolute value of the diode forward voltage drop of inverter leg b. It must be defined as a positive value.
Const_Vf_Diode_c	[V]	The absolute value of the diode forward voltage drop of inverter leg c. It must be defined as a positive value.
Sw_DeviceType_a	[1|2]	Power electronics device type of inverter leg a ▪ 1: MOSFET ▪ 2: IGBT
Sw_DeviceType_b	[1|2]	Power electronics device type of inverter leg b ▪ 1: MOSFET ▪ 2: IGBT
Sw_DeviceType_c	[1|2]	Power electronics device type of inverter leg c ▪ 1: MOSFET ▪ 2: IGBT

Related topics

References

History of the THREE_LEVEL_THREE_PHASE_INVERTER Block..... 537
Three Level Three Phase Inverter (ModelDesk Parameterizing 🕮)
Three-Level Half-Bridge Inverter..... 86

Three-Phase DCM Inverter

Description

The THREE_PHASE_DCM_INVERTER block implements a three-phase power converter that consists of six power switches (IGBT and body diodes connected in a bridge configuration). A precise simulation considers natural switching effects, such as the free-wheeling diode, and changing energy flow such as passive energy recovery into battery.

A power switch drop-out can also be simulated to support a dynamic failure injection or a failure-dependent communication path simulation.

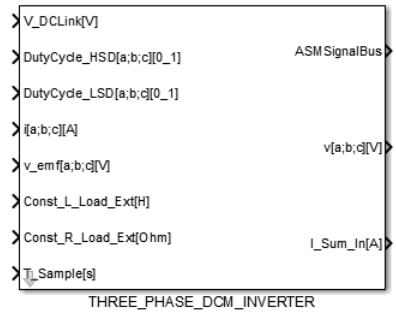

See the following illustration:

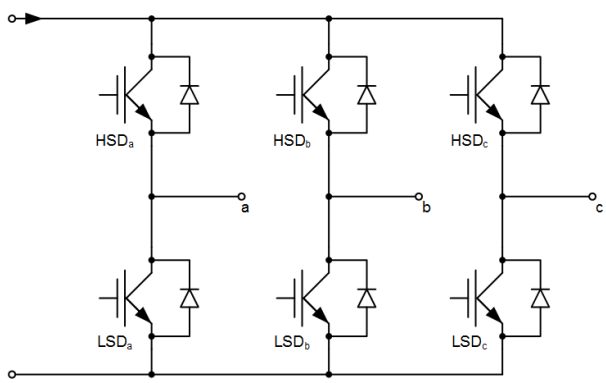

The following illustration shows the simplified switch model:

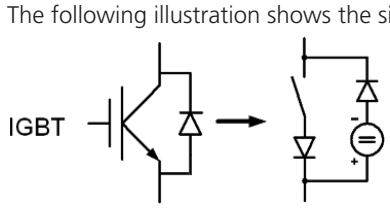

In this model, the average voltage can be calculated for different gate levels and current directions according to the following look-up table:

	$i_x > 0$	$i_x < 0$
HSD on (tHSD)	v_{DC}	$v_{DC} + v_{fd}$
LSD on (tLSD)	$-v_{fd}$	0
Neither (td)	$-v_{fd}$	$v_{DC} + v_{fd}$

The following illustrations shows the wave form of the voltage for an IGBT-based inverter leg, first for a positive current, then for a negative current.

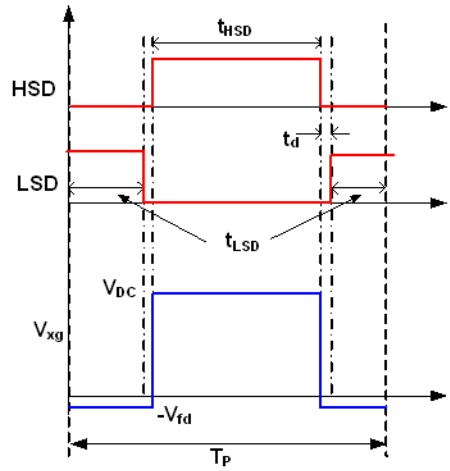

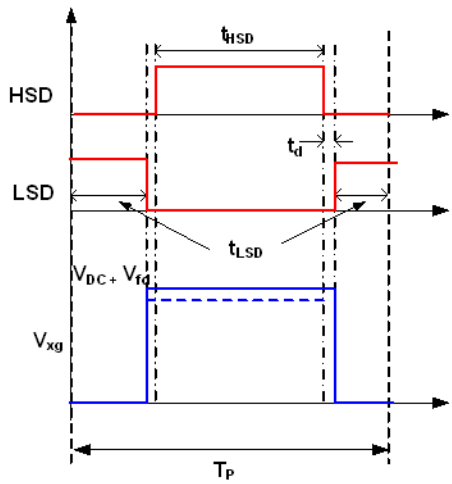

The instantaneous gate signals are ignored in the model. Instead, the average gate timing is measured via a fast PWM measurement board such as the DS5202 FPGA-based PWM measurement board. These times (tHSD and tLSD) are used to calculate the average value of the voltage. The voltage loss generated by the on-state resistance is subtracted from the average voltage.

$$i > 0 \qquad v_x = \frac{1}{T_P}\left[t_{HSD}\, v_{DC} + (1 - t_{HSD})(-v_d) - t_{HSD}\, i_x\, R_{OnState}\right]$$

$$i < 0 \qquad v_x = \frac{1}{T_P}\left[(1 - t_{LSD})(v_{DC} + v_d) - t_{HSD}\, i_x\, R_{OnState}\right]$$

The inverter model is able to simulate the discontinuous conduction mode of a three-phase electrical load. A discontinuous conduction can be caused by turning off all power switches or diode conductions of a half bridge. To exactly model the discontinuous mode, the currents in phases a, b, and c are calculated by three observers, one for each phase. The calculation of the phase currents can be performed by using a simple model of the connected load. See the following illustration:

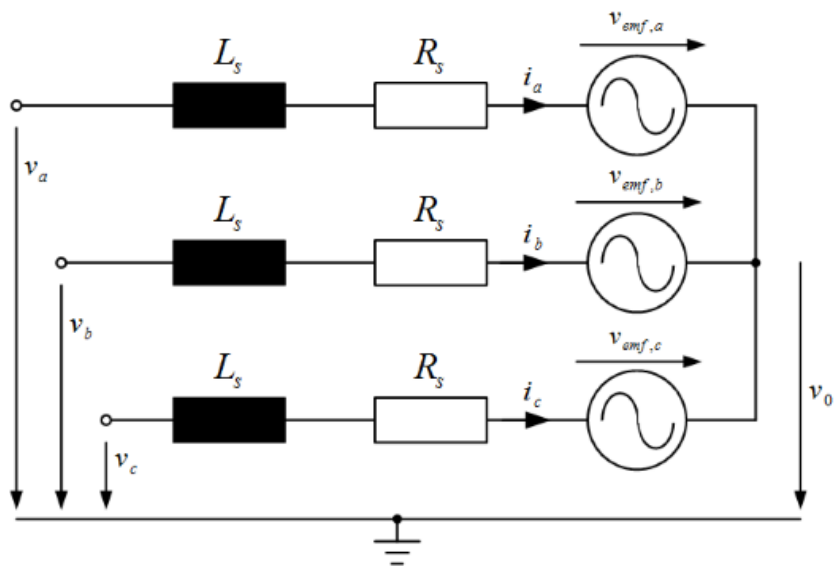

The phase current in the next sampling step can be predicted based on the following equation with the inductance and the resistance of the connected load.

$$i_x(k+1) = i_x(k-1) + \frac{T_{Sample}}{L_S}\left[v_x(k) - R_S\, i_x(k-1) - v_{emf,x}(k-1) - v_0(k-1)\right]$$

$with\ x = a, b, c$

$v_{emf,x}(k-1)$ and $i_x\,(k-1)$ are the feedback EMF voltages and phase currents of the connected machine. $v_0(k-1)$ is determined by the observers. To hide algebraic loops in the model implementation, these values must be taken from the last sampling step$(k-1)$.

$v_x(k)$ describes the phase output voltage of the three-phase power converter. This voltage depends on the driver duty cycle and the direction of the load currents.

The three-phase DCM inverter with observers allows a correct description of body diode conduction, so that the discontinuous conduction mode can be accurately detected. If the discontinuous conduction mode occurs, the voltage is adjusted so that the phase current is zero in the next sampling step. In this case, the adjusted voltages are applied as converter output voltages.

The following illustration displays the principle of operation of the three-phase DCM inverter.

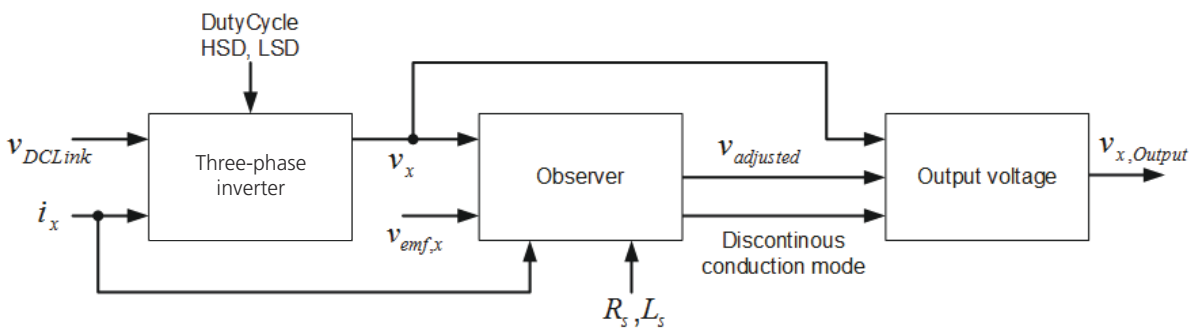

The three-phase DCM inverter can also simulate the operation of a three-phase load with missing driver signals of the power switches (e.g., for HSDa and LSDa). To simulate this type of failure, the corresponding duty cycles must be set to zero.

This configuration can also be applied to switches in phases b and c. The following figure shows the configuration a of duty cycle vector if switches HSDa, LSDb, and HSDc are not driven.

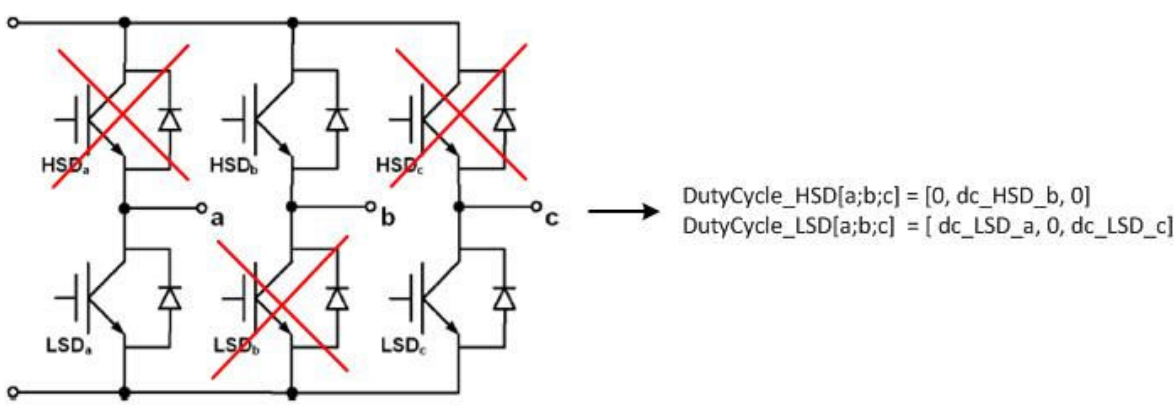

Because of the missing driver signals for the switches HSDa, LSDb, and HSDc, the phase currents become discontinuous. In phases a and c, there are only negative currents. In phase b, a positive current is created.

Inports

The following table shows the inports:

Name	Unit	Description
Const_L_Load_Ext	[H]	External load inductance (e.g., electric machine)
Const_R_Load_Ext	[Ω]	External load resistance (e.g., electric machine)
DutyCycle_HSD[a;b;c]	[0_1]	Duty cycle of the high-side driver (phases a;b;c)
DutyCycle_LSD[a;b;c]	[0_1]	Duty cycle of the low-side driver (phases a;b;c)
i[a;b;c]	[A]	Line currents of the connected motor (load)

Name	Unit	Description
T_Sample	[s]	Sample time
V_DCLink	[V]	Input of DC link voltage
v_emf[a;b;c]	[V]	EMF voltages of the connected machine (load)

Outports

The following table shows the outports:

Name	Unit	Description
ASMSignalBus	[]	Signal bus that contains signals of ASM components. Refer to ASMSignalBus (ASM User Guide 🕮).
I_Sum_In	[A]	Three-phase inverter bridge current drain
v[a;b;c]	[V]	Calculated supply voltages

Parameters

The following table shows the parameters:

Name	Unit	Description
Const_I_Sw_min	[A]	The minimum current flows in the switch. If the current is lower than this threshold, it is treated as zero
Const_L_Load	[H]	Stator inductance of the connected machine
Const_R_Load	[Ω]	Stator resistance of the connected machine
Const_R_OffState	[Ω]	On-state resistance of body diodes
Const_R_OnState	[Ω]	On-state resistance of IGBTs
Const_Vf_Diode	[V]	Absolute value of the diode forward voltage drop
Sw_Load	[0|1]	Switch for load source: ▪ 0: Intern (block parameter) ▪ 1: Extern (block inport)

Related topics

References

History of the THREE_PHASE_DCM_INVERTER Block..... 537
Three Phase DCM Inverter (ModelDesk Parameterizing 🕮)

Three-Phase Inverter

Description

The THREE_PHASE_INVERTER block implements a three-phase power converter that consists of six power switches connected in a bridge configuration. The type

of power switch (IGBT or MOSFET) is selectable. The three-phase inverter contains three half-bridge inverters.

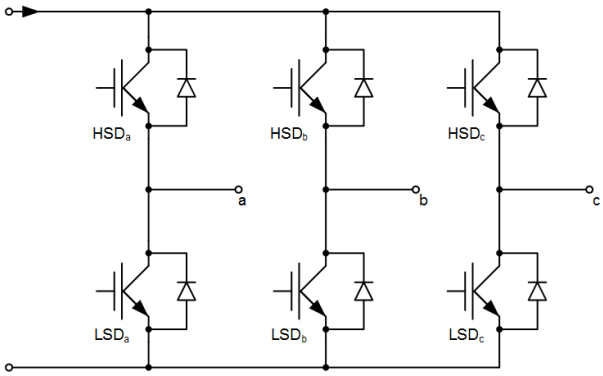

The next illustration shows the Simulink representation of the THREE_PHASE_INVERTER block:

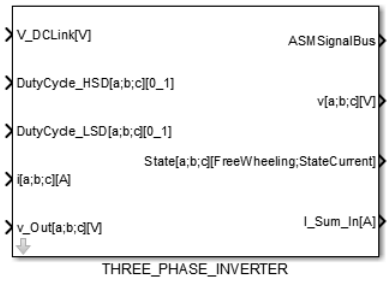

Inports

The following table shows the inports:

Name	Unit	Description
DutyCycle_HSD[a;b;c]	[0_1]	Duty cycle of the high side driver (phase a;b;c)
DutyCycle_LSD[a;b;c]	[0_1]	Duty cycle of the low side driver (phase a;b;c)
i[a;b;c]	[A]	Line currents of the connected motor
V_DCLink	[V]	Input of DC link voltage
v_Out[a;b;c]	[V]	Output voltage of the connected motor with open gates

Outports

The following table shows the outports:

Name	Unit	Description
ASMSignalBus	[]	Signal bus that contains signals of ASM components. Refer to ASMSignalBus (ASM User Guide 🕮).
I_Sum_In	[A]	Three-phase inverter bridge current drain
State	[]	Signal bus with two signals: Freewheeling ▪ 0: No freewheeling ▪ 1: Freewheeling

Name	Unit	Description
		State current ▪ 1: Negative ▪ 2: Floating ▪ 3: Positive
v[a;b;c]	[V]	Calculated supply voltages

Parameter

The following table shows the block parameters:

Name	Unit	Description
Const_DutyCycle_OnPoint_a	[0_1]	To influence the gate on state handling, it is possible to define a duty cycle threshold value (on point) of inverter leg a. If the HSD duty cycle is higher than this threshold, the HSD duty cycle is set to one and the LSD duty cycle to zero and vice versa.
Const_DutyCycle_OnPoint_b	[0_1]	To influence the gate on state handling, it is possible to define a duty cycle threshold value (on point) of inverter leg b. If the HSD duty cycle is higher than this threshold, the HSD duty cycle is set to one and the LSD duty cycle to zero and vice versa.
Const_DutyCycle_OnPoint_c	[0_1]	To influence the gate on state handling, it is possible to define a duty cycle threshold value (on point) of inverter leg c. If the HSD duty cycle is higher than this threshold, the HSD duty cycle is set to one and the LSD duty cycle to zero and vice versa.
Const_I_Min_PE_a	[A]	The minimum current flows in the switch of inverter leg a. If the current is lower than this threshold, it will be treated as zero. This parameter is only used if no gate times are measured.
Const_I_Min_PE_b	[A]	The minimum current flows in the switch of inverter leg b. If the current is lower than this threshold, it will be treated as zero. This parameter is only used if no gate times are measured.
Const_I_Min_PE_c	[A]	The minimum current flows in the switch of inverter leg c. If the current is lower than this threshold, it will be treated as zero. This parameter is only used if no gate times are measured.
Const_R_OnState_a	[Ω]	On-state resistance inverter leg a
Const_R_OnState_b	[Ω]	On-state resistance inverter leg b
Const_R_OnState_c	[Ω]	On-state resistance inverter leg c
Const_Vf_Diode_a	[V]	The absolute value of the diode forward voltage drop of inverter leg a. It must be defined as a positive value.
Const_Vf_Diode_b	[V]	The absolute value of the diode forward voltage drop of inverter leg b. It must be defined as a positive value.
Const_Vf_Diode_c	[V]	The absolute value of the diode forward voltage drop of inverter leg c. It must be defined as a positive value.
Sw_DeviceType_a	[1|2]	Power electronics device type of inverter leg a ▪ 1: MOSFET ▪ 2: IGBT

Name	Unit	Description
Sw_DeviceType_b	[1|2]	Power electronics device type of inverter leg b ▪ 1: MOSFET ▪ 2: IGBT
Sw_DeviceType_c	[1|2]	Power electronics device type of inverter leg c ▪ 1: MOSFET ▪ 2: IGBT
Sw_ProtectionTime_a	[]	The protection time handling can be disabled with the protection time switch of inverter leg a. In the disabled state, the LSD duty cycle is calculated from the HSD duty cycle (LSD duty cycle = 1 - HSD duty cycle). ▪ 1: protection time is enabled ▪ 0: protection time is disabled
Sw_ProtectionTime_b	[]	The protection time handling can be disabled with the protection time switch of inverter leg b. In the disabled state, the LSD duty cycle is calculated from the HSD duty cycle (LSD duty cycle = 1 - HSD duty cycle). ▪ 1: protection time is enabled ▪ 0: protection time is disabled
Sw_ProtectionTime_c	[]	The protection time handling can be disabled with the protection time switch of inverter leg c. In the disabled state, the LSD duty cycle is calculated from the HSD duty cycle (LSD duty cycle = 1 - HSD duty cycle). ▪ 1: protection time is enabled ▪ 0: protection time is disabled

Related topics

References

Half-Bridge Inverter 82
History of the THREE_PHASE_INVERTER Block 538
Three Phase Inverter (ModelDesk Parameterizing 🕮)

Three-Phase Rectifier

Description

The THREE_PHASE_RECTIFIER block implements a three-phase power rectifier that consists of up to six power diodes connected in a bridge configuration as shown in the following illustration. It converts an AC source to a DC source.

There are two groups of diodes:

- Top group: HD_a, HD_b, and HD_c
- Bottom group: LD_a, LD_b, and LD_c

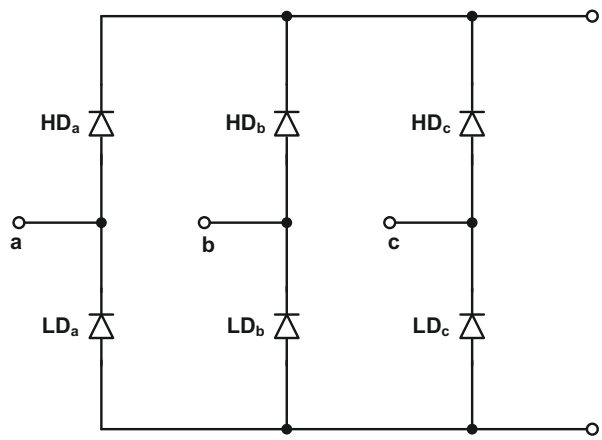

In this model, the AC side of the three-phase rectifier is assumed to be connected to a symmetrical three-phase voltage system through a resistance R connected in series and an inductance L. The diodes are modeled by a finite DC voltage and a resistance when forward-biased.

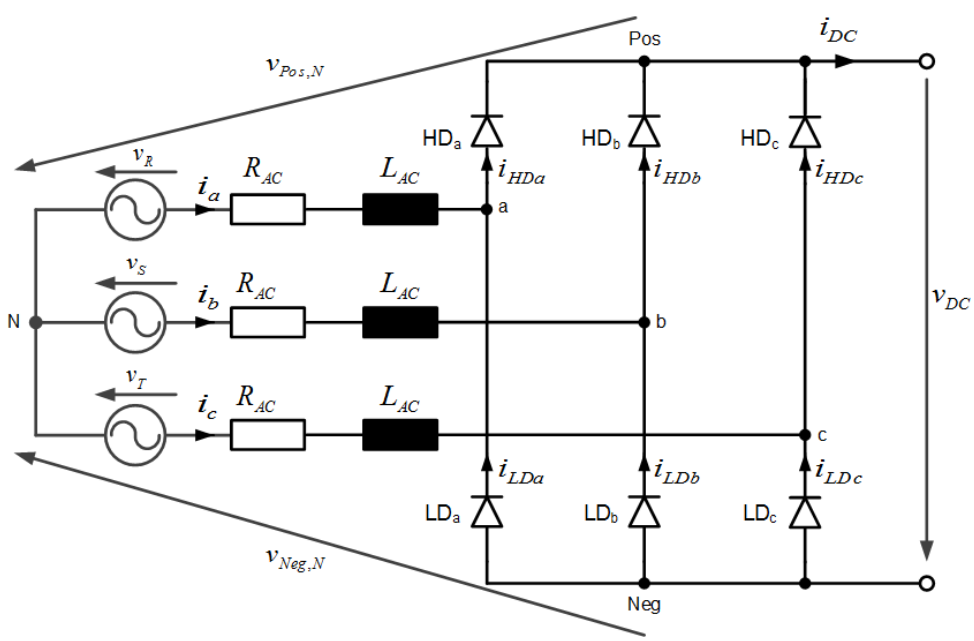

The following assumptions have to be taken into account:

- When HD_x is conducting, LD_x is blocking with (x = a, b, c).
- Only two or three diodes are conducting at the same time.
- There is no inductor on the DC side.

In the top group, each diode is forward-biased when the expression $v_x - v_{on} - v_{Pos,N} > 0$ is true.

In the bottom group, each diode is forward-biased when the expression $v_{Neg,N} - v_{on} - v_x > 0$ is true, where $x = R, S, T$ and $v_{Pos,N}$ (respectively

$v_{Neg,N}$) is the voltage at the positive (respectively the voltage at the negative) DC terminal to the neutral point N.

Note

To guarantee a numerically stable simulation, the time constant of the RL circuit must not be too small with regard to the currently used sample time. If the time constant is twice less than the sample time, the inductance will not be considered by the simulation, i.e. the RL-circuit becomes a simple R-circuit. The inductance L_{AC} does not affect the calculation of the diode currents.

The following illustration shows the Simulink representation of the block:

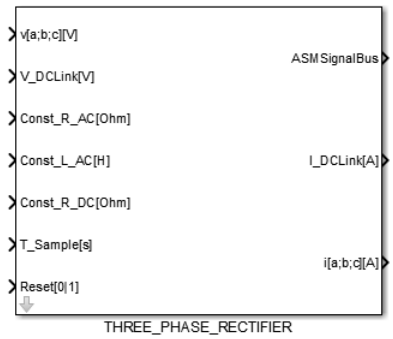

Inports

The following table shows the inports:

Name	Unit	Description
Const_L_AC	[H]	Source inductance
Const_R_AC	[Ω]	Source resistance
Const_R_DC	[Ω]	DC resistance
Reset	[0|1]	Reset
T_Sample	[s]	Sample time of motor model
V_DCLink	[V]	Input of DC link voltage
v[a;b;c]	[V]	Supply voltages

Outports

The following table shows the outports:

Name	Unit	Description
ASMSignalBus	[]	Signal bus that contains signals of ASM components. Refer to ASMSignalBus (ASM User Guide 🕮).
I_DCLink	[A]	DC current
i[a;b;c]	[A]	Line currents

Parameters

The following table shows the parameters:

Name	Unit	Description
Const_Rf_Diode	[Ω]	Diode forward resistance
Const_Vf_Diode	[V]	Diode forward voltage

Related topics

References

History of the THREE_PHASE_RECTIFIER Block..... 539
Three Phase Rectifier (ModelDesk Parameterizing 🕮)

Sensors

Hall Encoder

Description

The HALL_ENCODER block model generates the typical Hall encoder signals, for example, used for BLDC control.

The next illustration shows the Simulink representation of the block.

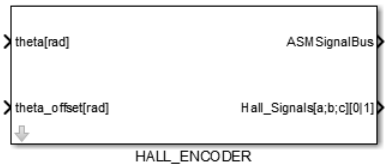

Inports

The following table shows the inports:

Name	Unit	Description
theta	[rad]	Rotor angle
theta_offset	[rad]	Rotor angle offset

Outports

The following table shows the outports:

Name	Unit	Description
ASMSignalBus	[]	Signal bus that contains signals of ASM components. Refer to ASMSignalBus (ASM User Guide 🕮).
Hall_Signals[a;b;c]	[0|1]	Hall signals

Parameter

The following table shows the block parameters:

Name	Unit	Description
Const_PolePairs	[]	Number of pole pairs
Hall_Matrix	[]	Hall configuration matrix

Related topics

References

Hall Encoder (ModelDesk Parameterizing 🕮)
History of the HALL_ENCODER Block..... 523

Electrics

Where to go from here

Information in this section

Active Elements and Circuits.....82
The subsystem includes active electrical elements and circuits.

Electric Machines.....91
The subsystems include models of basic electric machines.

Passive Elements and Circuits.....98
The subsystem includes passive electrical elements and circuits.

Power Supplies.....115
The **Power Supplies** subsystem includes the power supplies components.

Active Elements and Circuits

Where to go from here

Information in this section

Half-Bridge Inverter 82
The inverter is used to convert DC voltage to AC voltage of different magnitude and frequency.

Three-Level Half-Bridge Inverter 86
The inverter is used to convert DC voltage to AC voltage of different magnitude and frequency.

Half-Bridge Inverter

Description

The inverter is used to convert DC voltage to AC voltage of different magnitude and frequency. It can be built using different power electronics devices. A MOSFET-based inverter model and an IGBT-based inverter model are simulated in the power electronics library. As mentioned in the introduction, the switching behavior is not simulated. Instead, the average value of the output voltage v_{xg} is calculated according to the gate's timing. The following illustration shows an inverter leg with HSD and LSD.

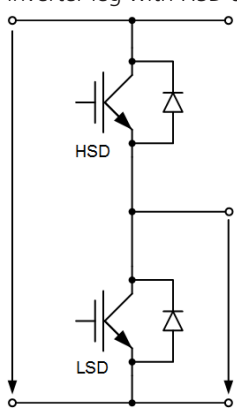

The following illustration shows the simplified switch models. The internal impedances of the switches are ignored.

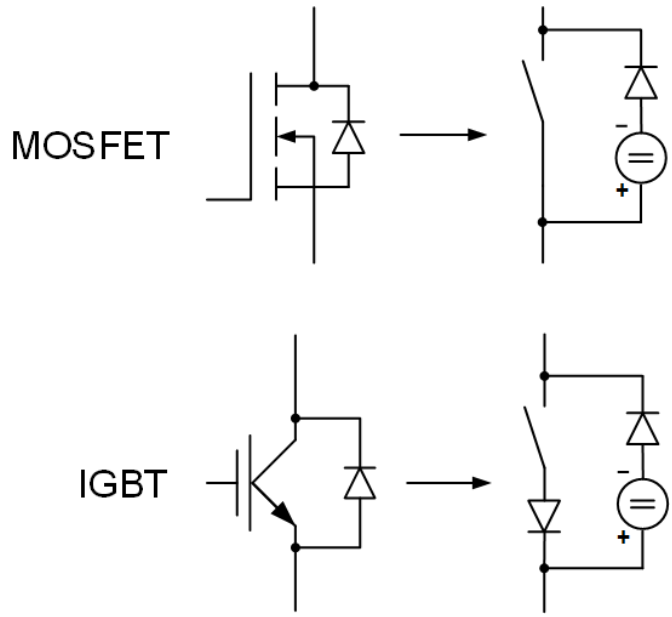

In this model, the average voltage can be calculated for different gate levels and current directions according to the following look-up table.

i_x	$i_x > 0$		$i_x < 0$		$i_x = 0$	
Device Type	IGBT	MOSFET	IGBT	MOSFET	IGBT	MOSFET
HSD on (t_{HSD})	v_{DC}	v_{DC}	$v_{DC} + v_{fd}$	v_{DC}	v_{DC}	v_{DC}
LSD on (t_{LSD})	$-v_{fd}$	0	0	0	0	0
Neither (t_d)	$-v_{fd}$	$-v_{fd}$	$v_{DC} + v_{fd}$	$v_{DC} + v_{fd}$	v_open	v_open

The following illustration shows the wave form of the voltage for a MOSFET-based inverter leg for positive and negative current.

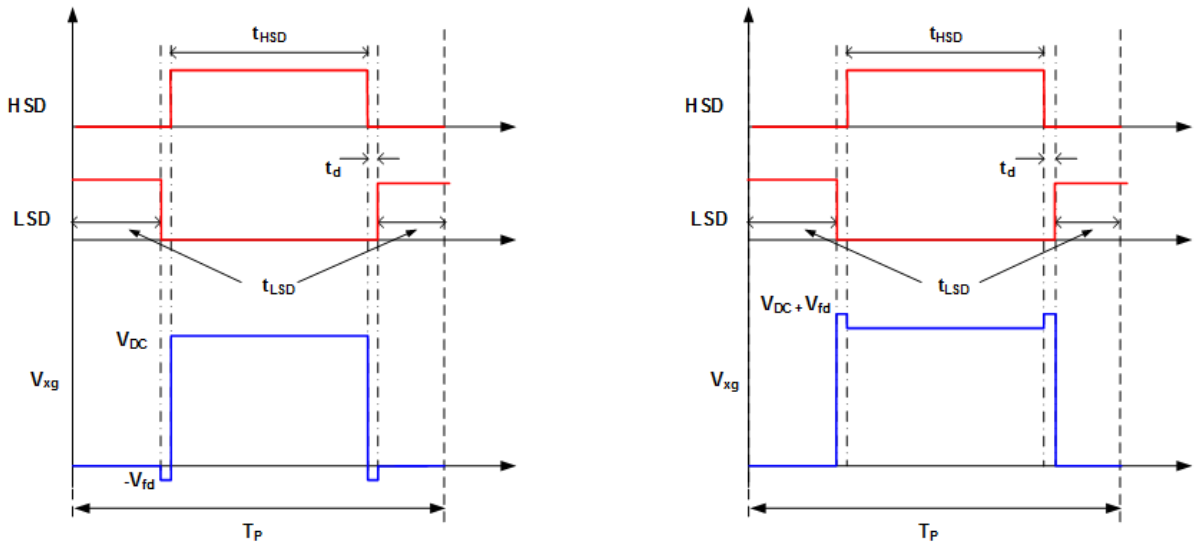

The instantaneous gate signals are ignored in the model. Instead, the average gate timing is measured via a fast PWM measurement board, for example, the DS5202 FPGA-Based PWM measurement board. These times (t_{HSD} and t_{LSD}) are used to calculate the average value of the voltage. The voltage loss generated by the on-state resistance is subtracted from this average voltage.

For MOSFET

$$i \geq 0 \qquad v_{xg} = \frac{1}{T_p}[t_{HSD}\, v_{DC} + 2\, t_d(-v_d) - t_{HSD}\, i_x\, R_{OnState}]$$

$$i < 0 \qquad v_{xg} = \frac{1}{T_p}[t_{HSD}\, v_{DC} + 2\, t_d(v_{DC} + v_d) - t_{HSD}\, i_x\, R_{OnState}] = \frac{1}{T_p}$$

$$[(1 - t_{LSD})v_{DC} + 2\, t_d\, v_d - t_{HSD}\, i_x\, R_{OnState}]$$

For IGBT

$$i \geq 0 \qquad v_{xg} = \frac{1}{T_p}[t_{HSD}\, v_{DC} + (1 - t_{HSD})(-v_d) - t_{HSD}\, i_x\, R_{OnState}]$$

$$i < 0 \qquad v_{xg} = \frac{1}{T_p}[(1 - t_{LSD})(v_{DC} + v_d) - t_{HSD}\, i_x\, R_{OnState}]$$

If no gate timing is measured, i.e., the switches are not triggered, and the current reaches zero amps, the model sends a flag to the motor model to tell it that the current must be blocked in the current phase. That can be achieved by applying the back EMF as a phase voltage. Thus, the voltage summation on this phase is zero.

The next illustration shows the Simulink representation of the inverter.

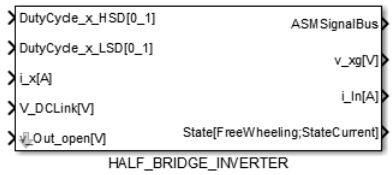

Inports

The following table shows the inports:

Name	Unit	Description
DutyCycle_x_HSD	[0_1]	Duty cycle of the high-side driver
DutyCycle_x_LSD	[0_1]	Duty cycle of the low-side driver
I_x	[A]	Load current
V_DCLink	[V]	DC link voltage
v_Out_open	[V]	Voltage in the case of an undefined floating state, which is usually the output voltage of connected electric motor when the gates are open.

Outports

The following table shows the outports:

Name	Unit	Description
ASMSignalBus	[]	Signal bus that contains signals of ASM components. Refer to ASMSignalBus (ASM User Guide 🕮).
I_In	[A]	Inverter bridge current drain
State	[MUX]	Signal bus with two signals: FreeWheeling ▪ 0: No freewheeling ▪ 1: Freewheeling State current ▪ 1: Negative current ▪ 2: Floating ▪ 3: Positive current
v_xg	[V]	Output voltage

Parameter

The following table shows the block parameters:

Name	Unit	Description
Const_DutyCycle_OnPoint	[0_1]	To influence the gate on state handling, it is possible to define a duty cycle threshold value (on point). If the HSD duty cycle is higher than this threshold, the HSD duty cycle is set to one and the LSD duty cycle to zero and vice versa.

Name	Unit	Description
Const_I_Min_PE	[A]	The minimum current flows in the switch. If the current is lower than this threshold, it will be treated as zero. This parameter is only used if no gate times are measured.
Const_R_OnState	[Ω]	On-state resistance
Const_Vf_Diode	[V]	The absolute value of the diode forward voltage drop. It must be defined as a positive value.
Sw_DeviceType	[1|2]	Power electronics device type ▪ 1: MOSFET ▪ 2: IGBT
Sw_ProtectionTime	[]	The protection time handling can be disabled with the protection time switch. In the disabled state, the LSD duty cycle is calculated from the HSD duty cycle (LSD duty cycle = 1 - HSD duty cycle). ▪ 1: Protection time is enabled ▪ 2: Protection time is disabled

Related topics

References

Half Bridge Inverter (ModelDesk Parameterizing 🕮)
History of the HALF_BRIDGE_INVERTER Block..... 522

Three-Level Half-Bridge Inverter

Description

The inverter is used to convert DC voltage to AC voltage of different magnitude and frequency. It can be built using different power electronics devices. A MOSFET-based inverter model and an IGBT-based inverter model are simulated in the power electronics library. The switching behavior is ignored. Instead, the average value of the output voltage v_{xg} is calculated according to the gate's timing.

The following illustration shows an inverter leg with HHSD, HLSD, LHSD and LLSD.

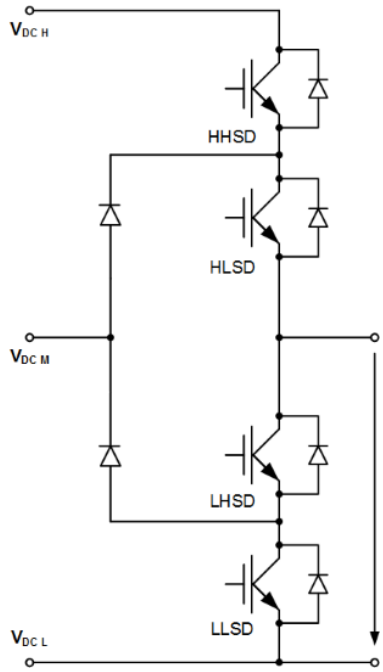

The inverter can connect the load to the higher DC voltage (HHSD and HLSD on), to the medium DC voltage (HLSD and LHSD on) and the lower DC voltage (LHSD and LLSD on). When the medium DC voltage level is output, one of the two clamping diodes conducts the phase current according to the current polarity.

The following illustration shows the simplified switch models. The internal impedances of the switches are ignored.

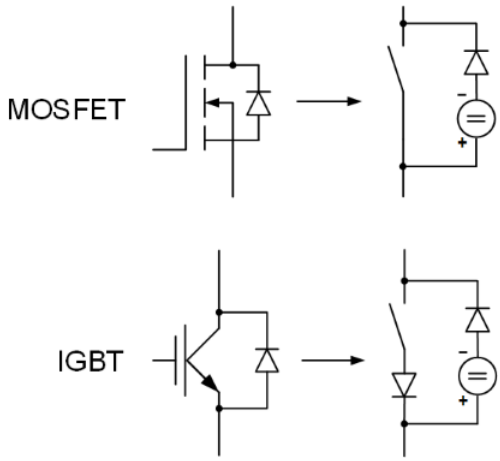

In this model, the average voltage can be calculated for different gate levels and current directions.

The following illustration shows the wave form of the voltage for the IGBT-based inverter leg for positive and negative current.

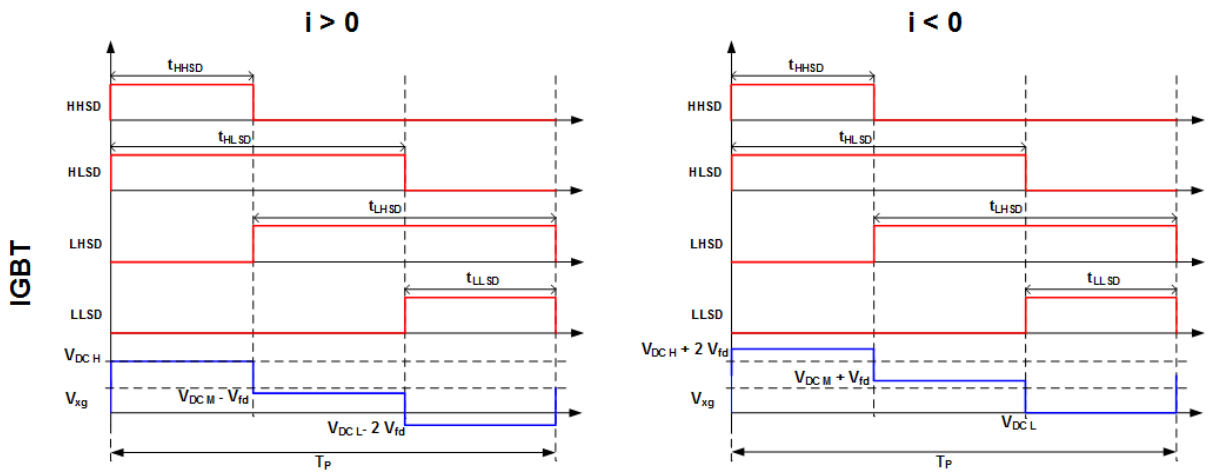

The following illustration shows the wave form of the voltage for the MOSFET-based inverter leg for positive and negative current.

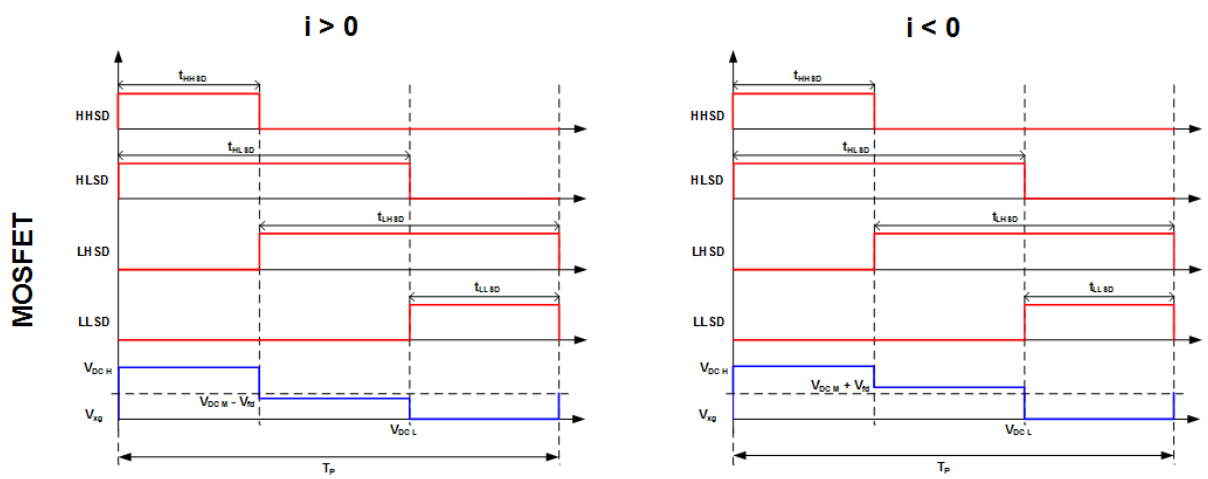

The instantaneous gate signals are ignored in the model. Instead, the average gate timing is measured via a fast PWM measurement board, for example, the DS5202 FPGA-Based PWM measurement board. These times (t_{HHSD}, t_{HLSD}, t_{LHSD} and t_{LLSD}) are used to calculate the average value of the voltage.

For MOSFET

$$i > 0 \qquad v_{xg} = \frac{1}{T_p}\Big[(1 - t_{LHSD})v_{DCH} + (t_{LHSD} - t_{LLSD})\big(v_{DCM} - v_{fd}\big) + t_{LLSD}\, v_{DCL}\Big]$$

$$i < 0 \qquad v_{xg} = \frac{1}{T_p}\Big[(1 - t_{LHSD})v_{DCH} + (t_{LHSD} - t_{LLSD})\big(v_{DCM} - v_{fd}\big) + t_{LLSD}\, v_{DCL}\Big]$$

For IGBT

$$i > 0 \qquad v_{xg} = \frac{1}{T_p}\left[(1 - t_{LHSD})v_{DCH} + (t_{LHSD} - t_{LLSD})\left(v_{DCM} - v_{fd}\right) + t_{LLSD}\left(v_{DCL} - 2v_{fd}\right)\right]$$

$$i < 0 \qquad v_{xg} = \frac{1}{T_p}\left[(1 - t_{LHSD})\left(v_{DCH} + 2\,v_{fd}\right) + (t_{LHSD} - t_{LLSD})\left(v_{DCM} - v_{fd}\right) + t_{LLSD}\,v_{DCL}\right]$$

If no gate timing is measured, i.e., the switches are not triggered, and the current reaches zero amps, the model sends a flag to the motor model to tell it that the current must be blocked in the current phase. That can be achieved by applying the back EMF as a phase voltage. Thus, the voltage summation on this phase is zero. The next illustration shows the Simulink representation of the THREE_LEVEL_HALF_BRIDGE_INVERTER block.

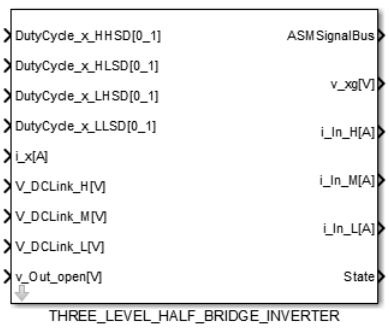

Inports

The following table shows the inports:

Name	Unit	Description
DutyCycle_HHSD[a;b;c]	[0_1]	Duty cycle of the upper high-side driver (phase a;b;c)
DutyCycle_HLSD[a;b;c]	[0_1]	Duty cycle of the upper low-side driver (phase a;b;c)
DutyCycle_LHSD[a;b;c]	[0_1]	Duty cycle of the lower high-side driver (phase a;b;c)
DutyCycle_LLSD[a;b;c]	[0_1]	Duty cycle of the lower low-side driver (phase a;b;c)
i_Stator[a;b;c]	[A]	Motor currents of the connected three-phase motor
V_DCLink_H	[V]	Input of high DC link voltage
V_DCLink_L	[V]	Input of the low DC link voltage
V_DCLink_M	[V]	Input of the medium DC link voltage
v_Out[a;b;c]	[V]	Output voltage of the connected motor with open gates

Outports

The following table shows the outports:

Name	Unit	Description
ASMSignalBus	[]	Signal bus that contains signals of ASM components. Refer to ASMSignalBus (ASM User Guide 🕮).

Name	Unit	Description
I_Sum_In_H	[A]	Inverter bridge current drain high side
I_Sum_In_L	[A]	Inverter bridge current drain low side
State	[MUX]	Signal bus with two signals: FreeWheeling: ▪ 0: No freewheeling ▪ 1: Freewheeling State current: ▪ 1: Negative current ▪ 2: Floating ▪ 3: Positive current
v_xg	[V]	Output voltage

Parameter

The following table shows the block parameters:

Name	Unit	Description
Const_I_Min_PE	[A]	The minimum current flows in the switch. If the current is lower than this threshold, it will be treated as zero. This parameter is only used if no gate times are measured.
Const_Vf_Diode	[V]	The absolute value of the diode forward voltage drop. It must be defined as a positive value.
Sw_DeviceType	[1|2]	Power electronics device type ▪ 1: MOSFET ▪ 2: IGBT

Related topics

References

History of the THREE_LEVEL_HALF_BRIDGE_INVERTER Block..... 536
Three Level Half Bridge Inverter (ModelDesk Parameterizing 🕮)

Electric Machines

Where to go from here

Information in this section

DC Machine.....91
The DC machine is modeled with a variable linear magnetic flux, an exciter and an armature circuit.

Electric Machine Basic.....95
The ELECTRIC_MACHINE_BASIC block simulates the basic function of an electric machine with current controller and power electronics.

DC Machine

Description

The DC_MACHINE block is modeled with a variable linear magnetic flux, an exciter and an armature circuit. The exciter circuit generates a magnetic flux which induces a voltage in the armature circuit. The model calculates the armature current according to the inner resistance, the inductance of the armature circuit and the terminal voltage.

The next illustration shows the Simulink representation of the DC machine.

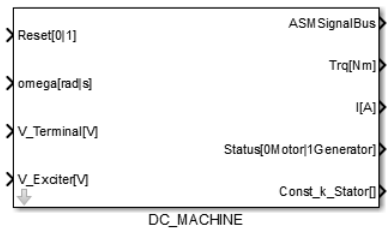

There are three excitation modes available:

- Permanent magnet excitation $\phi = const$.
- Linear excitation $\phi = c_1\, i_e$
- Nonlinear excitation$\phi = f(i_e)$

A load reference-arrow system is used for the DC machine. The current flowing into the DC machine is positive.

The next figure shows the equivalent circuit diagram of the model with linear excitation.

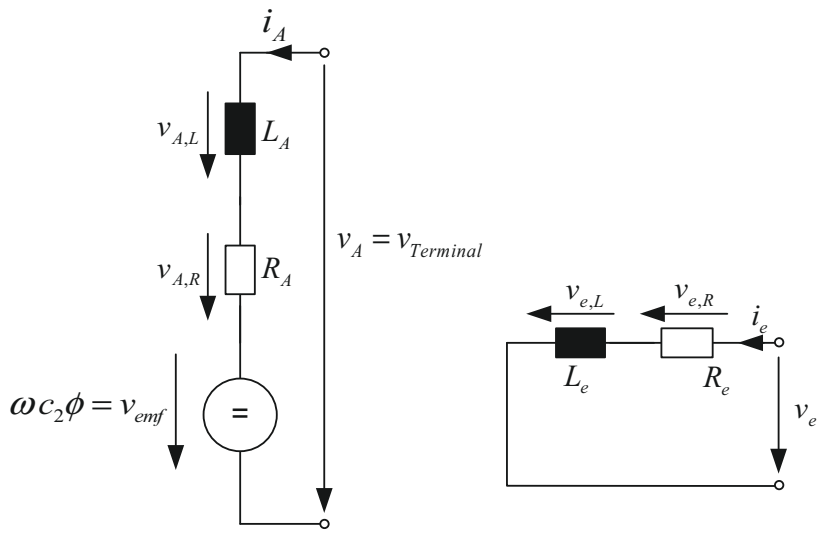

Mode of machine operation with linear excitation:

$v_{emf} = \omega\, c_2\, \phi$

$Trq_A = i_A\, c_2\, \phi$

Armature:

$$v_A = R_A\, i_A + L_A \frac{di_A}{dt} + v_{emf}$$

Exciter:

$$v_e = R_e\, i_e + L_e \frac{di_e}{dt}$$

where:

v_A	is the armature voltage
i_A	is the armature current
Trq_A	is the armature torque
R_A	is the armature resistance
L_A	is the armature inductance
c_2	is the machine stator constant
v_e	is the exciter voltage
i_e	is the exciter current
R_e	is the exciter resistance
L_e	is the exciter inductance
c_1	is the machine exciter constant
ω_A	is the rotational speed
ϕ	is the magnetic flux

The next figure shows the control diagram of the DC machine model with linear excitation.

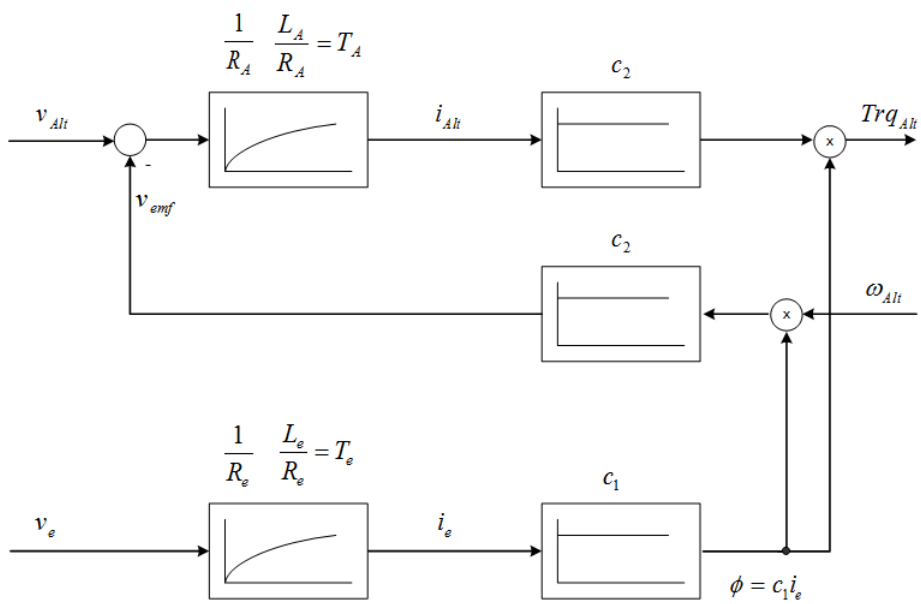

The direction of the energy flow of the simulated DC machine is invertible and the machine can be used as a motor or generator depending on the voltage polarity and the flow direction of the current. The next figure shows the characteristic diagram of the DC machine.

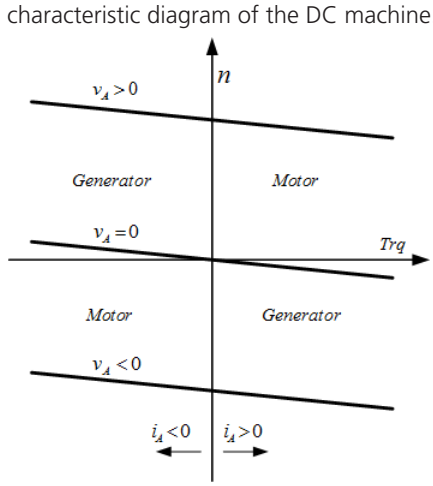

Inports

The following table shows the inports:

Name	Unit	Description
omega	[rad/s]	Rotational speed
Reset	[0|1]	Reset
V_Exciter	[V]	Exciter voltage
V_Terminal	[V]	Armature voltage

Outports

The following table shows the outports:

Name	Unit	Description
ASMSignalBus	[]	Signal bus that contains signals of ASM components. Refer to ASMSignalBus (ASM User Guide 🕮).
Const_k_Stator	[]	Stator constant
I	[V]	Current
Status	[0|1]	Machine status: ▪ 0: Motor ▪ 1: Generator
Trq	[Nm]	Torque

Parameter

The following table shows the block parameters:

Name	Unit	Description
Const_I_Max_Exciter	[A]	Maximal exciter current
Const_k_Exciter	[Vs/A]	Linear phi: machine exciter constant c1
Const_k_Stator	[]	Machine stator constant c2
Const_L_Armature	[Henry]	Armature inductance
Const_L_Exciter	[Henry]	Linear phi: exciter inductance
Const_PolePairs	[]	Number of pole pairs
Const_R_Armature	[Ω]	Armature resistance
Const_R_Exciter	[Ω]	Exciter resistance
Const_Windings_Exciter	[]	Nonlinear phi: exciter windings
ExcitationMode	[1|2|3]	Switch excitation mode: ▪ 1: Permanent ▪ 2: Linear ▪ 3: Nonlinear
Map_I_Exciter	[A]	Nonlinear phi: exciter current = f(magnetic flux)
StepSize	[s]	Simulation step size

Related topics

References

DC Machine (ModelDesk Parameterizing 🕮)
History of the DC_MACHINE Block..... 520

Electric Machine Basic

Description

The ELECTRIC_MACHINE_BASIC block simulates the basic function of an electric machine (e.g., PMSM or SCIM) with current controller and power electronics.

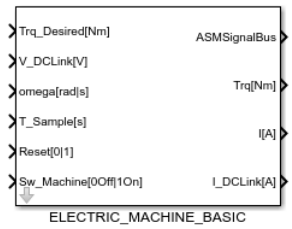

The following illustration shows the circuit diagram of the model:

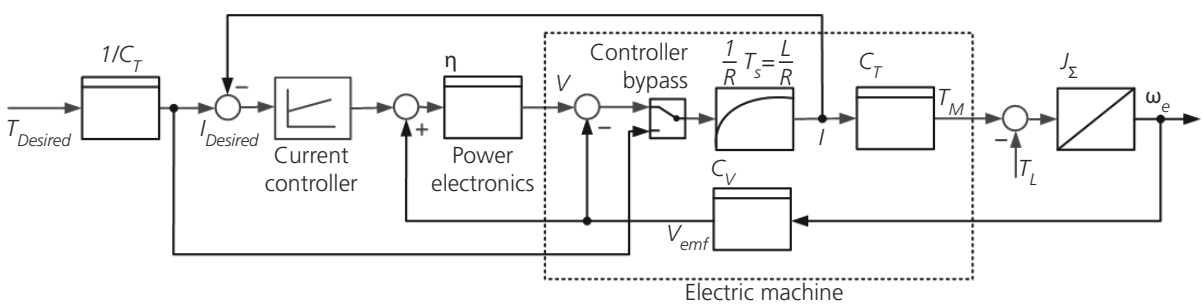

The electric machine is simulated as a first-order transfer function (PT1) with the factor 1/R as gain and L/R as time constant. The machine-speed-depended back EMF voltage V_{emf} is calculated with the machine voltage constant C_V.

$$G(s) = \frac{\frac{1}{R}}{1 + \frac{L}{R}s}$$

where:

R is the machine resistance

L is the machine inductance

The power electronics block represents the efficiency of the converter. The current controller is implemented as a PI controller with the back EMF voltage as the precontrol value.

The desired current is calculated from the desired torque via the machine torque constant. To use an external controller, the controller bypass functionality of the model can be used.

To reach higher engine speed by restricting the torque, a field-weakening can be used. This effect can be simulated by an engine speed dependent scaling of the

machine constants C_V and C_T. The scaling factor is defined with the Map_Factor_MachineConst parameter.

The machine can operate in all four quadrants.

Inports

The following table shows the inports:

Name	Unit	Description
omega	[rad/s]	Rotational speed
Reset	[0|1]	Reset
Sw_Machine	[0|1]	Switch for electric machine: ▪ 0: Off ▪ 1: On
Trq_Desired	[Nm]	Desired torque
T_Sample	[s]	Sample time
V_DCLink	[V]	DC link voltage (terminal voltage)

Outports

The following table shows the outports:

Name	Unit	Description
ASMSignalBus	[]	Signal bus that contains signals of ASM components. Refer to ASMSignalBus (ASM User Guide 🕮).
I	[A]	Current
I_DCLink	[A]	DC link current
Trq	[Nm]	Torque

Parameters

The following table shows the parameters:

Name	Unit	Description
Const_Efficiency_PowerElectronics	[]	Efficiency power electronics
Const_I_Limit	[A]	Current limit current controller
Const_Ki	[A]	Integral gain current controller
Const_Kp	[]	Proportional gain current controller
Const_L	[H]	Inductance electric machine
Const_R	[Ohm]	Resistance electric machine
Const_TrqConst	[Nm/A]	Torque constant C_T electric machine
Const_V_Limit	[V]	Voltage limit current controller
Const_VConst	[V/rpm]	Voltage constant C_V electric machine
Map_Factor_MachineConst	[]	Factor of electric machine constants C_V and $C_T = f(omega[rpm])$

Name	Unit	Description
Sw_ControllerBypass	[1|2]	Switch controller bypass: ▪ 1: Controller ▪ 2: Bypass

Processing information

The machine voltage constant C_V and machine torque constant C_T are often published in various units.

In theory, when both are specified in SI units, they are numerically equal. In SI units, the machine torque constant has the *Nm/A* unit and the machine voltage constant the *V/(rad/s)* unit.

If the machine voltage constant has the *V/rpm* unit, as in the electric machine basic model, it can be calculated as follows:

$$C_T\left[\frac{Nm}{A}\right] = C_V\left[\frac{V}{rad/s}\right]$$

$$C_V\left[\frac{V}{rpm}\right] = C_V\left[\frac{V}{rad/s}\right] \cdot \frac{\pi}{30}$$

Related topics

References

Electric Machine Basic (ModelDesk Parameterizing 🕮)
History of the ELECTRIC_MACHINE_BASIC Block..... 520

Passive Elements and Circuits

Where to go from here

Information in this section

Current Sink 98
The system simulates the current as a function of the voltage via a look-up table and can be controlled by a control signal.

Potentiometer 100
The potentiometer models any kind of dynamic load with continuously adjustable resistance.

P Load 101
The system simulates the load current according to the nominal power and the nominal and actual voltage.

R Load 102
The system simulates a resistor.

RC Load Parallel 103
The system simulates the resistor and capacity connected in parallel.

RC Load Series 105
The system simulates the resistor and capacity connected in series.

RL Load Parallel 106
The system simulates the resistor and inductance connected in parallel.

RL Load Series 108
The system simulates the resistor and inductance connected in series.

RL System Select 109
The system simulates the resistor and inductance connected in series.

RLC Load Parallel 111
The system simulates the resistor, inductance and capacity connected in parallel.

RLC Load Series 112
The system simulates the resistor, inductance and capacity connected in series.

Current Sink

Description

The system simulates the current as a function of the voltage via a look-up table and can be controlled by a control signal. A load reference-arrow system is used for the current sink element. The current flowing into the load is positive.

The next illustration shows the Simulink representation of the load.

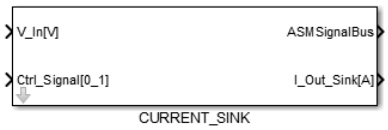

The equation of the system can be written as

$i = ctrl\ LUT(v)$

where:

i is the current
v is the voltage
$ctrl$ is the control signal

Inports

The following table shows the inports:

Name	Unit	Description
Ctrl_Signal	[0_1]	Control signal 0...1
Reset	[0|1]	Reset
V_In	[V]	Voltage

Outports

The following table shows the outports:

Name	Unit	Description
ASMSignalBus	[]	Signal bus that contains signals of ASM components. Refer to ASMSignalBus (ASM User Guide 🕮).
I_Out_Sink	[A]	Current

Parameter

The following table shows the block parameters:

Name	Unit	Description
Map_I_Sink	[A]	Current sink = f(voltage)

Related topics

References

Current Sink (ModelDesk Parameterizing 🕮)

Potentiometer

Description

The potentiometer models any kind of dynamic load with continuously adjustable resistance. For example, you can simulate the energy consumption of a sound system or of an air conditioner.

For the load a consumer reference arrow system is used. The current flowing into the load is a positive current.

The following illustration shows the Simulink representation of the POTENTIOMETER block.

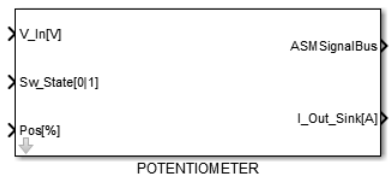

The equation of the system can be written as

$$i = \frac{v}{R(Pos)}$$

where:

i	is the current
v	is the voltage
R	is the resistance
Pos	is the potentiometer position

Inports

The following table shows the inports:

Name	Unit	Description
Pos	[%]	Potentiometer position
Sw_State	[0|1]	Switch state ▪ 0: off ▪ 1: on
V_In	[V]	Voltage

Outports

The following table shows the outports:

Name	Unit	Description
ASMSignalBus	[]	Signal bus that contains signals of ASM components. Refer to ASMSignalBus (ASM User Guide 🕮).
I_Out_Sink	[A]	Current

Parameters

The following table shows the block parameters:

Name	Unit	Description
Map_R	[Ω]	Mapping of resistance in relation to position

Related topics

References

History of the POTENTIOMETER Block 528
Potentiometer (ModelDesk Parameterizing 🕮)

P Load

Description

The system simulates the load current according to the nominal power and the nominal and actual voltage. A load reference-arrow system is used for the load. The current flowing into the load is positive.

The next illustration shows the Simulink representation of the load.

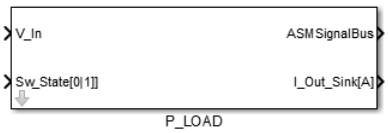

The equation of the system can be written as

$$i = \frac{v}{R_N}$$

$$R_N = \frac{V_N^2}{P_n}$$

where:

i is the current
v is the voltage
R_N is the nominal resistance
V_N is the nominal voltage
P_N is the nominal power

Inports

The following table shows the inports:

Name	Unit	Description
Sw_State	[0|1]	Switch state: ▪ 0: Off ▪ 0: On
V_In	[V]	Voltage

Outports

The following table shows the outports:

Name	Unit	Description
ASMSignalBus	[]	Signal bus that contains signals of ASM components. Refer to ASMSignalBus (ASM User Guide 🕮).
I_Out_Sink	[A]	Current

Parameter

The following table shows the block parameters:

Name	Unit	Description
Const_P_Nominal	[W]	Nominal power
Const_V_Nominal	[V]	Nominal voltage

Related topics

References

P Load (ModelDesk Parameterizing 🕮)

R Load

Description

The system simulates a resistor. A load reference-arrow system is used for the load. The current flowing into the load is positive.

The next illustration shows the Simulink representation of the load.

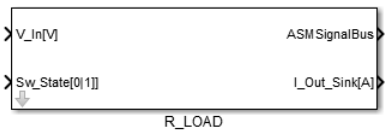

The equation of the system can be written as

$$i = \frac{v}{R}$$

where:
i is the current
v is the voltage
R is the resistance

Inports

The following table shows the inports:

Name	Unit	Description
Sw_State	[0|1]	Switch state ▪ 0: Off ▪ 1: On
V_In	[V]	Voltage

Outports

The following table shows the outports:

Name	Unit	Description
ASMSignalBus	[]	Signal bus that contains signals of ASM components. Refer to ASMSignalBus (ASM User Guide 🕮).
I_Out_Sink	[A]	Current

Parameter

The following table shows the block parameters:

Name	Unit	Description
Const_R	[Ohm]	Resistance

Related topics

References

R Load (ModelDesk Parameterizing 🕮)

RC Load Parallel

Description

The system simulates the resistor and capacity connected in parallel. A load reference-arrow system is used for the load. The current flowing into the load is positive.

The next illustration shows the Simulink representation of the load.

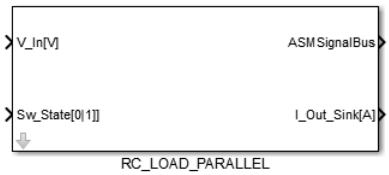

The equation of the system can be written as

$$i = \frac{v}{R} + C\frac{dv}{dt}$$

where:

i is the current
v is the voltage
R is the resistance
C is the capacitance

Note

If the time constant $T_{RC} = RC$ of the system is lower than the simulation step size, only the resistor part is simulated to avoid numerical instability.

Inports

The following table shows the inports:

Name	Unit	Description
Sw_State	[0|1]	Switch state: ▪ 0: Off ▪ 1: On
V_In	[V]	Voltage

Outports

The following table shows the outports:

Name	Unit	Description
ASMSignalBus	[]	Signal bus that contains signals of ASM components. Refer to ASMSignalBus (ASM User Guide 🕮).
I_Out_Sink	[A]	Current

Parameter

The following table shows the block parameters:

Name	Unit	Description
Const_C	[F]	Capacitance
Const_R	[Ω]	Resistance
StepSize	[s]	Simulation step size

Related topics

References

History of the RL_LOAD_PARALLEL Block 529
RC Load Parallel (ModelDesk Parameterizing 🕮)

RC Load Series

Description

The system simulates the resistor and capacity connected in series. A load reference-arrow system is used for the load. The current flowing into the load is positive.

The next illustration shows the Simulink representation of the load.

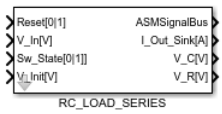

The equation of the system can be written as

$$v = Ri + \frac{1}{C}\int i\,dt$$

where:
i is the current
v is the voltage
R is the resistance
C is the capacitance

Note

If the time constant $T_{RC} = R \cdot C$ of the system is lower than the simulation step size, only the resistor part is simulated to avoid numerical instability.

Inports

The following table shows the inports:

Name	Unit	Description
Reset	[0 | 1]	Reset
Sw_State	[0|1]	Switch state: ▪ 0: Off ▪ 1: On
V_In	[V]	Voltage
V_Init	[V]	Initial capacitor voltage

Outports

The following table shows the outports:

Name	Unit	Description
ASMSignalBus	[]	Signal bus that contains signals of ASM components. Refer to ASMSignalBus (ASM User Guide 🕮).
I_Out_Sink	[A]	Current
V_C	[V]	Capacitor voltage
V_R	[V]	Resistance voltage

Parameter

The following table shows the block parameters:

Name	Unit	Description
Const_C	[F]	Capacitance
Const_R	[Ohm]	Resistance
Const_V_init	[V]	Initial capacitor voltage
StepSize	[s]	Simulation step size
Sw_V_Init	[0|1]	Initial capacitor voltage switch: ▪ 0: Internal, Const_V_Init parameter is used as initial capacitor voltage. ▪ 1: External, V_Init[V] inport is used as initial capacitor voltage

Related topics

References

History of the RC_LOAD_SERIES Block..... 529
RC Load Series (ModelDesk Parameterizing 🕮)

RL Load Parallel

Description

The system simulates the resistor and inductance connected in parallel. A load reference-arrow system is used for the load. The current flowing into the load is positive.

The next illustration shows the Simulink representation of the load.

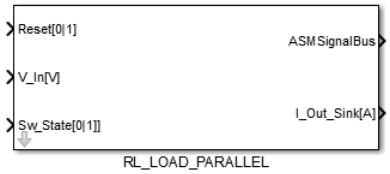

The equation of the system can be written as

$$i = \frac{v}{R} + \frac{1}{L}\int v\,dt$$

where:

i is the current
v is the voltage
R is the resistance
L is the inductance

Note

If the time constant $T_{RL} = \frac{L}{R}$ of the system is lower than the simulation step size, only the resistor part is simulated to avoid numerical instability.

Inports

The following table shows the inports:

Name	Unit	Description
Reset	[0|1]	Reset
Sw_State	[0|1]	Switch state ▪ 0: Off ▪ 1: On
V_In	[V]	Voltage

Outports

The following table shows the outports:

Name	Unit	Description
ASMSignalBus	[]	Signal bus that contains signals of ASM components. Refer to ASMSignalBus (ASM User Guide 🕮).
I_Out_Sink	[A]	Current

Parameter

The following table shows the block parameters:

Name	Unit	Description
Const_L	[H]	Inductance
Const_R	[Ohm]	Resistance
StepSize	[s]	Simulation step size

Related topics

References

RL Load Parallel (ModelDesk Parameterizing 🕮)

RL Load Series

Description

The system simulates the resistor and inductance connected in series. A load reference-arrow system is used for the load. The current flowing into the load is positive.

The next illustration shows the Simulink representation of the load.

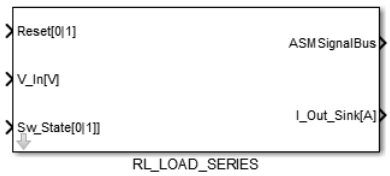

The equation of the system can be written as

$$v = Ri + L\frac{di}{dt}$$

where:

i is the current
v is the voltage
R is the resistance
L is the inductance

Note

If the time constant $T_{RL} = \frac{L}{R}$ of the system is lower than the simulation step size, only the resistor part is simulated to avoid numerical instability.

Inports

The following table shows the inports:

Name	Unit	Description
Reset	[0|1]	Reset
Sw_State	[0|1]	Switch state ▪ 0: Off ▪ 1: On
V_In	[V]	Voltage

Outports

The following table shows the outports:

Name	Unit	Description
ASMSignalBus	[]	Signal bus that contains signals of ASM components. Refer to ASMSignalBus (ASM User Guide 🕮).
I_Out_Sink	[A]	Current

Parameter

The following table shows the block parameters:

Name	Unit	Description
Const_R	[Ohm]	Resistance
Const_L	[H]	Inductance
StepSize	[s]	Simulation step size

Related topics

References

History of the RL_LOAD_SERIES Block..... 530
RL Load Series (ModelDesk Parameterizing 🕮)

RL System Select

Description

The system simulates the resistor and inductance connected in series. A load reference-arrow system is used for the load. The current flowing into the load is positive.

The next illustration shows the Simulink representation of the load.

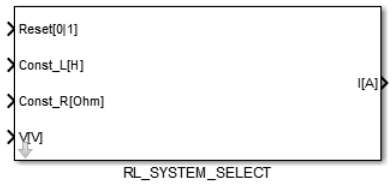

The equation of the system can be written as

$$v = R\,i + L\frac{di}{dt}$$

where:

i is the current
v is the voltage
R is the resistance
L is the inductance

Note

If the time constant $T_{RL} = \frac{L}{R}$ of the system is lower than the simulation step size, only the resistor part is simulated to avoid numerical instability.

Inports

The following table shows the inports:

Name	Unit	Description
Const_L	[H]	Inductance
Const_R	[Ω]	Resistance
Reset	[0|1]	Reset
V	[V]	Voltage

Outports

The following table shows the outports:

Name	Unit	Description
I	[A]	Current

Parameter

The following table shows the block parameters:

Name	Unit	Description
StepSize	[s]	Simulation step size

RLC Load Parallel

Description

The system simulates the resistor, inductance and capacity connected in parallel. A load reference-arrow system is used for the load. The current flowing into the load is positive.

The next illustration shows the Simulink representation of the load.

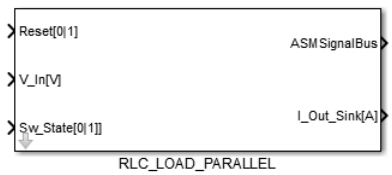

The equation of the system can be written as

$$i = \frac{v}{R} + \frac{1}{L}\int v\,dt + C\frac{dv}{dt}$$

where:

i is the current
v is the voltage
R is the resistance
L is the inductance
C is the capacitance

Note

If the one of the time constants $T_{RC} = RC$ or $T_{RL} = \frac{L}{R}$ of the system is lower than the simulation step size, only the resistor part is simulated to avoid numerical instability.

Inports

The following table shows the inports:

Name	Unit	Description
Reset	[0|1]	Reset
Sw_State	[0|1]	Switch state: ▪ 0: Off ▪ 1: On
V_In	[V]	Voltage

Outports

The following table shows the outports:

Name	Unit	Description
ASMSignalBus	[]	Signal bus that contains signals of ASM components. Refer to ASMSignalBus (ASM User Guide 🕮).
I_Out_Sink	[A]	Current

Parameter

The following table shows the block parameters:

Name	Unit	Description
Const_C	[F]	Capacitance
Const_L	[H]	Inductance
Const_R	[Ω]	Resistance
StepSize	[s]	Simulation step size

Related topics

References

History of the RLC_LOAD_PARALLEL Block..... 530
RLC Load Parallel (ModelDesk Parameterizing 🕮)

RLC Load Series

Description

The system simulates the resistor, inductance and capacity connected in series. A load reference-arrow system is used for the load. The current flowing into the load is positive.

The next illustration shows the Simulink representation of the load.

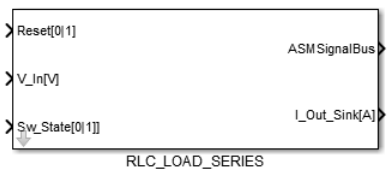

The equation of the system can be written as

$$v = Ri + L\frac{di}{dt} + \frac{1}{C}\int i\,dt$$

where:

i is the current
v is the voltage
R is the resistance
L is the inductance
C is the capacitance

Note

If one of the time constants $T_{RC} = R \cdot C$ or $T_{RL} = \frac{L}{R}$ of the system is lower than the simulation step size, only the resistor part is simulated to avoid numerical instability.

Inports

The following table shows the inports:

Name	Unit	Description
Reset	[0|1]	Reset
Sw_State	[0|1]	Switch state: ▪ 0: Off ▪ 1: On
V_In	[V]	Voltage

Outports

The following table shows the outports:

Name	Unit	Description
ASMSignalBus	[]	Signal bus that contains signals of ASM components. Refer to ASMSignalBus (ASM User Guide 🕮).
I_Out_Sink	[A]	Current

Parameter

The following table shows the block parameters:

Name	Unit	Description
Const_C	[F]	Capacitance
Const_L	[H]	Inductance
Const_R	[Ω]	Resistance
StepSize	[s]	Simulation step size

Related topics

References

History of the RLC_LOAD_SERIES Block..... 530
RLC Load Series (ModelDesk Parameterizing 🕮)

Power Supplies

Where to go from here

Information in this section

DC Link 115
A DC link circuit is used as an intermediate circuit to connect the power supply (e.g., battery) with the load system (e.g., inverter or passive load).

Supercapacitor 118
The SUPERCAPACITOR block presents a simplified model of a supercapacitor used as power supply for load systems (e.g. inverter or passive load), or energy storage.

Three-Phase Power Supply 119
This block presents a three-phase power supply.

DC Link

Description

The DC_LINK block presents a DC link circuit. It is used as an intermediate circuit to connect the power supply (e.g., battery) with the load system (e.g., inverter or passive load).

The following illustration shows the Simulink representation of the DC_LINK block.

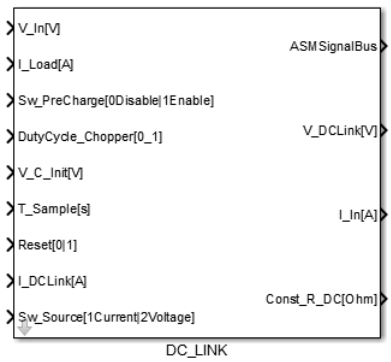

The following illustration shows the electrical circuit that is simulated with the DC link model.

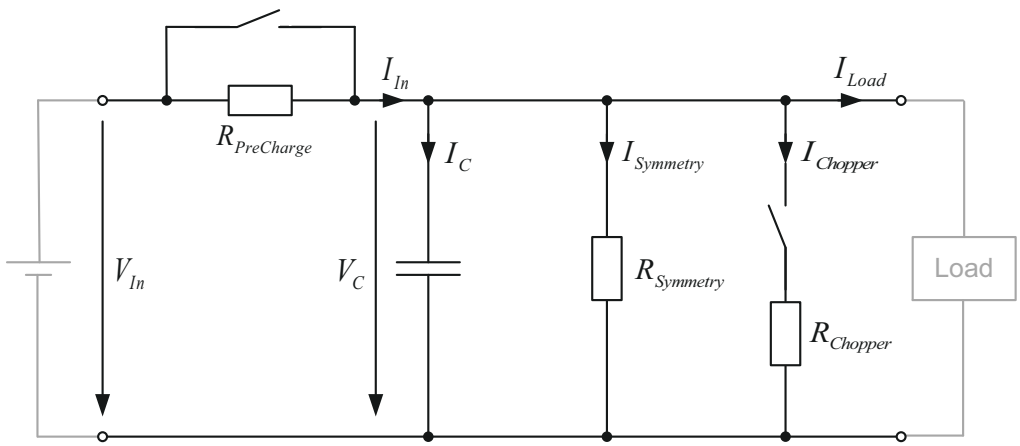

The capacitance is charged via the DC link input voltage (e.g., from a battery), by a DC current, or by current recovery of an active load (e.g., inverter). To avoid high current peaks, a precharge resistor can be used during the charging process of the capacitance.

The precharge resistance can be bypassed via a short circuit. In this case, a very low resistance is simulated that represents the wire resistance.

Tip

To guarantee a numeric stable simulation, the time constant of the RC circuit (precharge resistor and capacity) must not be too small with regard to the currently used sample time. A minimum allowed wire resistance, depending on the capacitance and simulation step size, is therefore calculated and used for the simulation.

In real DC link circuits, a series connection of capacitances is often used. Each capacitance is equipped with a parallel symmetry resistance to balance the capacitance voltages. The equivalent circuit of this connection is represented by the symmetry resistance in the DC link model.

The braking chopper is used in the DC link circuit to convert electrical energy to heat if the load feeds back energy to the intermediate circuit (e.g., current recovery of an electric machine via an inverter). The switch to activate the braking chopper resistance is controlled by a PWM duty cycle.

It is possible to deactivate the symmetry resistance and the braking chopper components via the block dialog mask if these model components are not applicable for your design.

Inports

The following table shows the inports:

Name	Unit	Description
DutyCycle_Chopper	[0_1]	Duty cycle to control chopper resistance
I_DCLink	[A]	DC Current
I_Load	[A]	Load current
Reset	[]	Reset
Sw_PreCharge	[0|1]	Switch to bypass the precharge resistor ▪ 0: Disable, short-circuited precharge resistor ▪ 1: Enable, active precharge resistor
Sw_Source	[1|2]	Switch to enable a charge of the capacitor: ▪ 1: Capacitor is charged by a current source ▪ 2: Capacitor is charged by a voltage source
T_Sample	[s]	Sample time
V_C_Init	[V]	Initial capacitance voltage
V_In	[V]	DC link input voltage

Outports

The following table shows the outports:

Name	Unit	Description
ASMSignalBus	[]	Signal bus that contains signals of ASM components. Refer to ASMSignalBus (ASM User Guide 🕮).
Const_R_DC	[Ohm]	DC resistance
I_In	[A]	DC link input current
V_DCLink	[V]	DC link voltage

Parameters

The following table shows the block parameters:

Name	Unit	Description
Const_C	[F]	Capacitance
Const_I_Max	[A]	Maximum DC link input current
Const_R_Chopper	[Ohm]	Chopper resistance
Const_R_PreCharge	[Ohm]	Precharge resistance
Const_R_Symmetry	[Ohm]	Symmetry resistance
Sw_R_Chopper	[0|1]	Switch chopper resistance ▪ 0: Disable ▪ 1: Enable
Sw_R_Symmetry	[0|1]	Switch symmetry resistance ▪ 0: Disable ▪ 1: Enable

Related topics

References

DC Link (ModelDesk Parameterizing 🕮)
History of the DC_LINK Block..... 519

Supercapacitor

Description

The SUPERCAPACITOR block presents a simplified model of a supercapacitor used as power supply for load systems (e.g., inverter or passive load) or energy storage. The following illustration shows the modeled RC network.

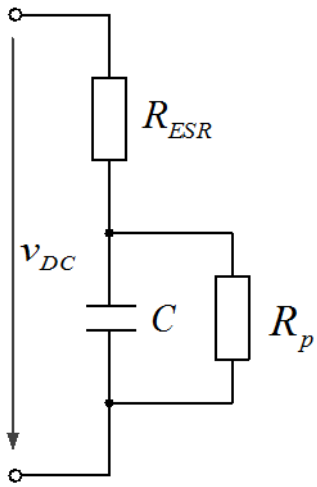

The series resistance R_{ESR} used to represent the effective series resistance (ESR) of the capacitor and the parallel resistance R_p models small parasitic effects.

The following illustration shows the Simulink representation of the SUPERCAPACITOR block.

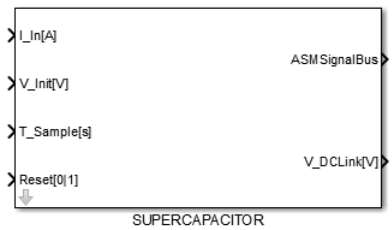

Inports

The following table shows the inports:

Name	Unit	Description
I_In	[A]	DC link input current
Reset	[0|1]	Reset
T_Sample	[s]	Sample time
V_Init	[V]	Initial voltage

Outports

The following table shows the outports:

Name	Unit	Description
ASMSignalBus	[]	Signal bus that contains signals of ASM components. Refer to ASMSignalBus (ASM User Guide 🕮).
V_DCLink	[V]	DC link voltage

Parameters

The following table shows the parameters:

Name	Unit	Description
Const_C	[F]	Capacitance
Const_R_ESR	[Ω]	Equivalent series resistance
Const_Rp	[Ω]	Parallel resistance

Related topics

References

History of the SUPERCAPACITOR Block 536
Supercapacitor (ModelDesk Parameterizing 🕮)

Three-Phase Power Supply

Description

The THREE_PHASE_POWERSUPPLY block implements a symmetric three-phase voltage source with an internal resistance and inductance. The three-phase voltage sources are connected in star with a common neutral connection. Voltage, frequency and initial angle can be set directly by input ports.

The next illustration shows the Simulink representation of the THREE_PHASE_POWERSUPPLY block.

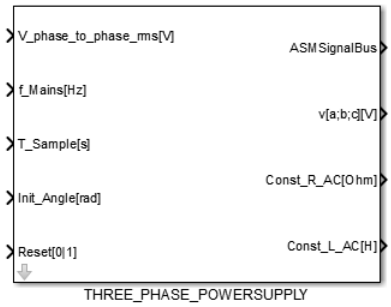

Inports

The following table shows the inports:

Name	Unit	Description
f_Mains	[Hz]	Main frequency
Init_Angle	[rad]	Initial angle
Reset	[0|1]	Reset
T_Sample	[s]	Sample time
V_phase_to_phase_rms	[V]	Root mean square of phase voltages

Outports

The following table shows the outports:

Name	Unit	Description
ASMSignalBus	[]	Signal bus that contains signals of ASM components. Refer to ASMSignalBus (ASM User Guide 🕮).
Const_L_AC	[H]	Source inductance
Const_R_AC	[Ω]	Source resistance
v[a;b;c][V]	[V]	Phase voltages

Parameters

The following table shows the parameters:

Name	Unit	Description
Const_L_AC	[H]	Source inductance
Const_R_AC	[Ω]	Source resistance

Related topics

References

History of the THREE_PHASE_POWERSUPPLY Block 539

Three Phase Power Supply (ModelDesk Parameterizing 🕮)

Hybrid and Battery Electric Vehicle

Where to go from here

Information in this section

Soft ECU BEV 124
Soft ECU Hybrid Vehicle 134

Soft ECU BEV

Where to go from here

Information in this section

Brake Control BEV..... 124
The BRAKE_CONTROL_BEV block monitors and coordinates the allocation of the requested braking torque between the electric generator and the hydraulic brake system.

Overview of the Soft ECU Battery Charging..... 127
There are two different charging scenarios: the AC charging, and the faster DC charging.

Soft ECU Charge Controller..... 128
This blocks controls the battery charging process of an electric vehicle.

Soft ECU Charging Station..... 129
This block controls the battery charging current by setting the desired charging station DC voltage.

Torque Request Coordination BEV..... 131
The TRQ_REQUEST_COORDINATION_BEV block coordinates and transmits the torque requests from the accelerator pedal, the recuperation, or external components like the ACC to the electric machines.

Brake Control BEV

Description

A serial regenerative brake system consists of a hydraulic brake and an electric motor that works as a brake actuator. Both systems must be able to implement the braking torque as required by the driver and illustrate the blending of the electro-generator and the hydraulic brakes. The driver's desired braking force is captured by a brake pedal that is connected via x-by-wire.

The BRAKE_CONTROL_BEV block monitors and coordinates the allocation of the requested braking torque between the electric generator and the hydraulic brake system.

A linear correlation between the position of the brake pedal and the requested braking torque exists in the model. Based on this requested brake torque, the model uses the gear ratio and differential transmission to calculate the torque the generator has to apply to decelerate the vehicle at the same rate as with conventional hydraulic brakes. This torque is used as requested setpoint for the EM. The BRAKE_CONTROL_BEV block monitors the current possible brake torque that the EM is able to deliver in parallel. The difference between the requested EM brake torque and the currently available EM brake torque is used as brake torque that has to be set by the conventional hydraulic brake.

If the vehicle velocity is below a minimum recuperation velocity, the regenerative brake torque is set to zero.

During an ESP or ABS intervention, the regenerative torque request is set to zero.

If the battery state of charge reaches a value of 100%, the regenerative brake torque request is set to zero via the Sw_Recuperation inport.

The following illustration shows the Simulink representation of the BRAKE_CONTROL_BEV block.

Inports

The following table shows the inports:

Name	Unit	Description
Enable_Trq_Brake_Extern	[0|1|2]	Enable external brake torque request: ▪ 0: Off ▪ 1: Additional external brake torque ▪ 2: Exclusive external brake torque
i_FinalDrive_Front	[]	Final drive ratio on the front
i_FinalDrive_Rear	[]	Final drive ratio on the rear
i_Trm_Front	[]	Transmission ratio on the front
i_Trm_Rear	[]	Transmission ratio on the rear
Pos_BrakePedal_Driver	[%]	Brake pedal position
Sw_Drivetrain_Mode	[1|2|3]	Drivetrain mode: ▪ 1: All wheel drive ▪ 2: Front wheel drive ▪ 3: Rear wheel drive
Sw_Recuperation	[0|1]	Switch for recuperation: ▪ 0: Recuperation enabled

Name	Unit	Description
		▪ 1: Recuperation disabled
SOC_Battery	[%]	Battery state of charge
Sw_DriveMode	[0|1|2]	Drive mode: ▪ 0: Hybrid ▪ 1: ICE only ▪ 2: EM only
Trq_Brake_Req_Extern	[Nm]	External brake torque request
Trq_EM_Front	[Nm]	Current torque of the electric machine on the front
Trq_EM_Rear	[Nm]	Current torque of the electric machine on the rear
Trq_Max_Brake	[Nm]	Maximum brake torque

Outports

The following table shows the outports:

Name	Unit	Description
ASMSignalBus	[]	Signal bus that contains signals of ASM components. Refer to ASMSignalBus (ASM User Guide 🕮).
Trq_Request_Brake	[Nm]	Torque request for the hydraulic brake
Pos_BrakePedal_Desired	[%]	Brake pedal request hydraulic brake
Trq_Request_Recup_EM_Front	[Nm]	Recuperation torque for the front electric machine
Trq_Request_Recup_EM_Rear	[Nm]	Recuperation torque for the rear electric machine

Parameters

The following table shows the parameters:

Name	Unit	Description
Const_TrqDistributionFront	[0_1]	Brake torque distribution between the front and rear electric machine. A parameter between 0 and 1 defines the proportional torque distribution of the front electrical machine.
Const_v_Min_Rec	[km/h]	Minimum velocity to activate recuperation.

Related topics

References

Brake Control BEV (ModelDesk Parameterizing 🕮)
History of the BRAKE_CONTROL_BEV Block..... 518

Overview of the Soft ECU Battery Charging

Description

There are numerous BEV and charging station suppliers. During the battery charging process, the vehicle and the charging station communicate to implement an optimal charging process of the battery. Two different charging scenarios are possible: the AC charging, and the faster DC charging.

AC charging systems In AC charging systems, the charging station delivers a two or three phase alternating current to the vehicle. The vehicle's power electronics has to rectify the current, to monitor the battery, and to control the charging process.

The following illustration shows an AC charging system:

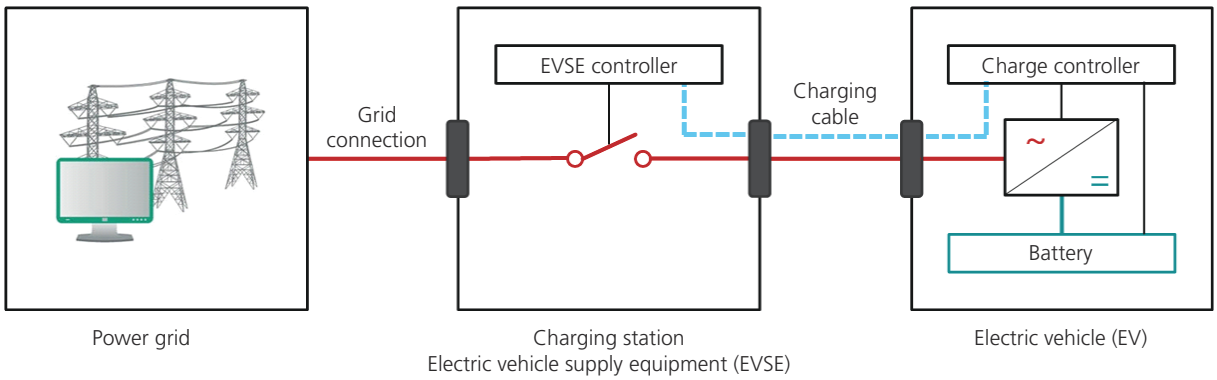

DC charging systems In DC charging systems, the charging station delivers a DC voltage and a current. The vehicle controller monitors the battery and sends a desired current command to the charging station. The charging station sets a DC charging voltage to deliver the current demand of the vehicle. A DC charging system is implemented in the ASM electric environment.

The following illustration shows a DC charging system.

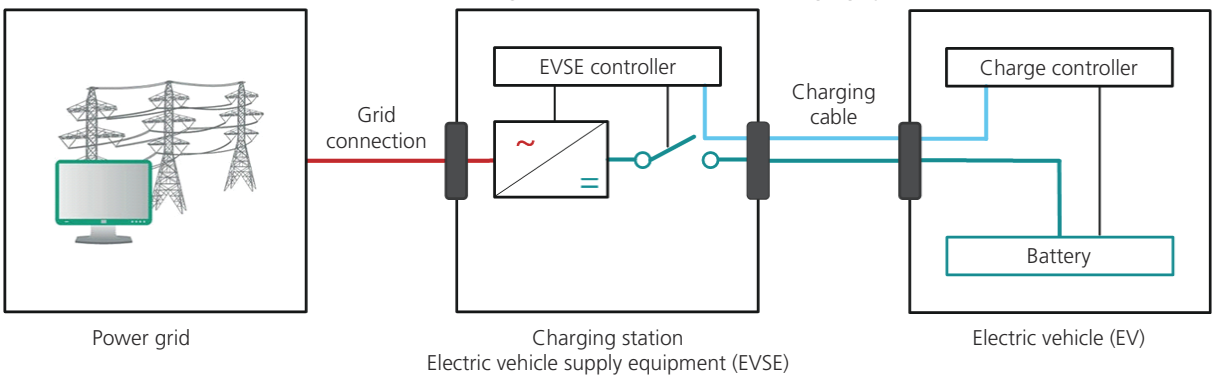

Soft ECU Charge Controller

Description

If the charging cable is connected, the charge controller monitors the state of charge (SOC) and the battery voltage, and sends the required charge current demand to the charging station. A constant current constant voltage (CCCV) procedure with a precharge phase is used for charging.

Until the bulk SOC is reached, a constant current is requested from the charging station.

When the bulk SOC is reached, the controller switches to a constant voltage control to prevent a battery overload.

If the SOC is very low at the beginning of the charging process, the charging starts with a precharge phase that sets a low charging current to protect the battery. If the full SOC is reached, the charging stops.

The following illustration shows the Simulink representation of the SOFT_ECU_EV_CHARGE_CONTROLLER block:

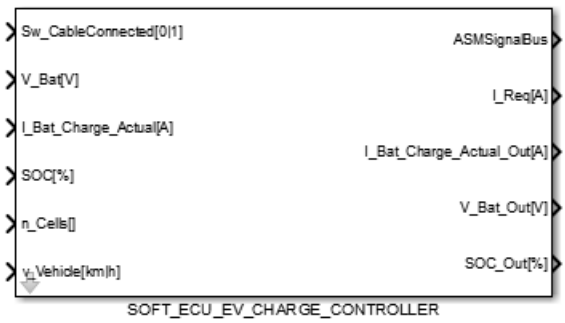

Inports

The following table shows the inports:

Name	Unit	Description
I_Bat_Charge_Actual	[A]	Actual battery current
n_Cells	[]	Number of battery cells
SOC	[%]	Battery state of charge
Sw_CableConnected	[0|1]	Cable connect switch. If the cable is connected and the vehicle velocity is zero, the battery charging starts: ▪ 0: Cable not connected ▪ 1: Cable connected
v_Vehicle	[km/h]	Vehicle velocity
V_Bat	[V]	Battery terminal voltage

Outports

The following table shows the outports:

Name	Unit	Description
ASMSignalBus	[]	Signal bus that contains signals of ASM components. Refer to ASMSignalBus (ASM User Guide 🕮).
I_Bat_Charge_Actual_Out	[A]	Actual battery current
I_Req	[A]	Battery current request
SOC_Out	[%]	Battery state of charge
V_Bat_Out	[V]	Battery terminal voltage

Parameters

The following table shows the parameters:

Name	Unit	Description
Const_I_Charge	[A]	Charge current for a constant current based charging
Const_I_Max	[A]	Maximum current limit
Const_SOC_BulkCharging	[%]	SOC threshold bulk charging
Const_SOC_FullCharging	[%]	SOC threshold full charging
Const_V_PreCharge	[V]	Battery cell precharge voltage threshold
Const_V_Ref	[V]	Battery cell voltage reference for a constant voltage based charging
StepSize	[s]	Simulation step size

Related topics

References

History of the SOFT_ECU_EV_CHARGE_CONTROLLER Block..... 532
Soft ECU EV Charge Controller (ModelDesk Parameterizing 🕮)

Soft ECU Charging Station

Description

The DC charging station receives requested values (e.g. current and/or voltage demand) from the electric vehicle. The Soft ECU charging station controls the battery charging by setting the desired values.

Two control modes are available:

- Voltage control mode: The vehicle requests the current. The soft ECU controls the charging station DC voltage depending on the current demand of the electric vehicle.

- Voltage set mode: The vehicle requests the voltage and the current. The soft ECU sets the voltage demand with a current limitation according to the vehicle request.

The following illustration shows the Simulink representation of the SOFT_ECU_CHARGING_STATION block:

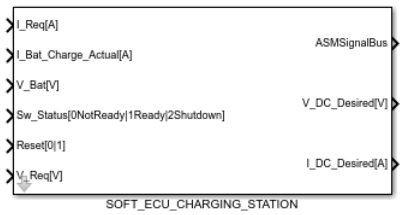

Inports

The following table shows the inports:

Name	Unit	Description
I_Bat_Charge_Actual	[A]	Actual battery charge current
I_Req	[A]	Requested charge current
Reset	[0|1]	Reset
Sw_Status	[0|1|2]	Charging station status: ▪ 0: Not ready ▪ 1: Ready ▪ 2: Shutdown
V_Bat	[V]	Battery terminal voltage
V_Req	[V]	Requested charging station voltage

Outports

The following table shows the outports:

Name	Unit	Description
ASMSignalBus	[]	Signal bus that contains signals of ASM components. Refer to ASMSignalBus (ASM User Guide 🕮).
I_DC_Desired	[A]	Desired current for voltage control
V_DC_Desired	[V]	Desired charging station terminal voltage

Parameters

The following table shows the parameters:

Name	Unit	Description
Const_E_Max	[Wh]	Maximum energy limit
Const_I_Max	[A]	Maximal current limit
Const_Kp	[]	Proportional gain of the current controller

Name	Unit	Description
Const_Ki	[]	Integral gain of the current controller
Const_P_Max	[kW]	Maximal power limit
Const_V_Max	[V]	Maximal voltage limit
StepSize	[s]	Simulation step size
Sw_CtrlMode	[0|1]	Switch for control mode: ▪ 0: Voltage control ▪ 1: Voltage set

Related topics

Basics

History of the SOFT_ECU_CHARGING_STATION Block..... 533

References

Soft ECU Charging Station (ModelDesk Parameterizing 🕮)

Torque Request Coordination BEV

Description

The requested drive torque is one of the most important input values for the drive management. The TRQ_REQUEST_COORDINATION_BEV block coordinates the torque requests, for example, from the accelerator pedal, the recuperation, or external components like the ACC, for the electric machines of the battery electric vehicle (BEV). The positions of the brake and accelerator pedals set the requested torque.

- If the position of the brake pedal is greater than the position of the accelerator pedal is neglected. The TRQ_REQUEST_COORDINATION_BEV block transmits the brake torque to the electric machine for recuperation.
- If the position of the brake pedal is lower than the cross fade threshold, the brake torque request fades to the acceleration torque request.
- If the brake pedal is in its default position, the driver's requested torque depends on the accelerator pedal. The relation of the accelerator pedal and the maximum EM torque is used to calculate the driver's requested torque.

The following illustration shows the Simulink representation of the torque request coordination:

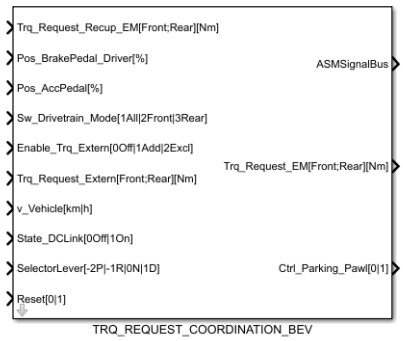

Inports

The following table shows the inports:

Name	Unit	Description
Enable_Trq_Extern	[0|1|2]	Enable external torque request (e.g., from ACC): ▪ 0: Off ▪ 1: External torque request is added to the torque request from the accelerator pedal ▪ 2: External torque request is used as the exclusive torque and the accelerator pedal torque request is neglected
Pos_AccPedal	[%]	Accelerator pedal position
Pos_BrakePedal_Driver	[%]	Brake pedal position
Reset	[0|1]	Reset
SelectorLever	[-2|-1|0|1]	Selector lever position to set the drive mode: ▪ -2: Park, torque request is set to zero and parking pawl is activated ▪ -1: Reverse ▪ 0: Neutral, torque request is set to zero ▪ 1: Drive, torque request is set
State_DCLink	[0|1]	Switch to set torque requests to zero if DC link is not active: ▪ 0: DC link is off, torque requests are set to zero. ▪ 1: DC link is active, torque requests are set.
Sw_Drivetrain_Mode	[1|2|3]	Drivetrain mode: ▪ 1: All wheel drive ▪ 2: Front wheel drive ▪ 3: Rear wheel drive
Trq_Request_Extern	[Nm]	External torque request
Trq_Request_Recup_EM[Front;Rear]	[Nm]	Recuperation torque request electric machine front and rear

Outports

The following table shows the outports:

Name	Unit	Description
ASMSignalBus	[]	Signal bus that contains signals of ASM components. Refer to ASMSignalBus (ASM User Guide 🕮).
Ctrl_Parking_Pawl	[0|1]	Switch for parking pawl control: ▪ 0: Off ▪ 1: On
Trq_Request_EM[Front;Rear]	[Nm]	Torque request for the front and rear electric machine

Parameters

The following table shows the parameters:

Name	Unit	Description
Const_Pos_BrakePedal_CrossFadeThres	[%]	Cross fade threshold brake pedal position. Below this threshold the fading from brake torque request to acceleration request starts.
Const_TimeConstant_Trq	[s]	Time constant first order delay for torque request to avoid hard torque request steps.
Const_Trq_Max_EM_Front	[Nm]	Maximum torque for the front electric machine
Const_Trq_Max_EM_Rear	[Nm]	Maximum torque for the rear electric machine
Map_Factor_Trq_Max_EM_Front	[]	Factor torque max EM front = f(Pos_AccPedal[%]) This factor multiplied with the maximum torque of the electric machine front supplies the resulting electric machine front torque request.
Map_Factor_Trq_Max_EM_Rear	[]	Factor torque max EM rear = f(Pos_AccPedal[%]) This factor multiplied with the maximum torque of the electric machine rear supplies the resulting electric machine rear torque request.
Map_Pos_AccPedal_Start	[%]	Additional start accelerator pedal position depending on the vehicle velocity. Useful to set an acceleration torque to start driving in case the brake pedal is released and the accelerator pedal is zero.
StepSize	[s]	Simulation step size

Related topics

References

History of the TRQ_REQUEST_COORDINATON_BEV Block..... 540
Torque Request Coordination BEV (ModelDesk Parameterizing 🕮)

Soft ECU Hybrid Vehicle

Where to go from here

Information in this section

Brake Control..... 134
The BRAKE_CONTROL block monitors and coordinates the allocation of the requested braking force between the generator (recuperation) and the brake system.

Clutch Control..... 136
The CLUTCH_CONTROL block is used to control the clutch.

Drive Management..... 137
The DRIVE_MANAGEMENT block controls the energy management in the hybrid manager.

Key Signals ICE..... 141
The KEY_SIGNALS_ICE block controls the generation of ignition switch signals of the ICE.

Hybrid Vehicle Switch..... 143
Depending on the key signals, the HYBRID_VEHICLE_SWITCH block switches the hybrid vehicle on or off.

Starter ICE..... 143
The STARTER_ICE block uses the transmission input speed and the starter request to decide whether and which torque is necessary to start.

Torque Request Coordination..... 145
The TRQ_REQUEST_COORDINATION block sets the requested torque depending on the positions of the brake and accelerator pedals.

Brake Control

Description

A serial regenerative brake system consists of a hydraulic brake and an electric motor that works as a brake actuator. Both systems must be able to implement the braking torque as required by the driver and illustrate the blending of the electro-generator and the hydraulic brakes. The driver's desired braking force is captured by a brake pedal that is connected via x-by-wire.

The BRAKE_CONTROL block monitors and coordinates the allocation of the requested braking force between the generator (recuperation) and the brake system.

In the model, there is a linear correlation between the position of the brake pedal and the requested braking torque. Based on this requested brake torque, the model uses the gear ratio and differential transmission to calculate the torque that the generator has to apply to decelerate the vehicle with the same

speed as with conventional hydraulic brakes. This torque is used as the requested setpoint for the EM. The BRAKE_CONTROL block also monitors the currently possible torque. The difference between the requested EM brake torque and the currently available EM brake torque is used as the brake torque that has to be set by the conventional hydraulic brake.

During an ESP or ABS intervention, the regenerative torque request is set to zero via the Sw_Recuperation inport.

If the battery state of charge reaches a value of 100%, the regenerative brake torque request is set to zero.

The following illustration shows the Simulink representation of the brake control:

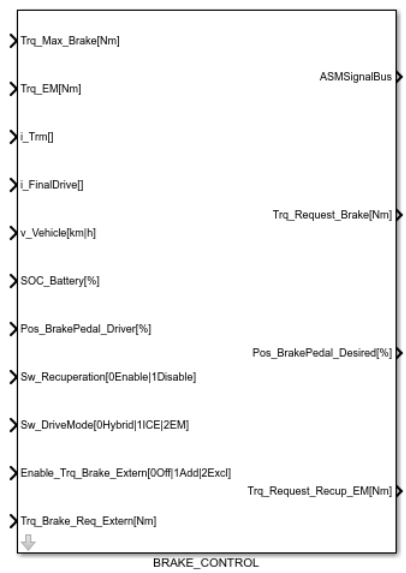

Inports

The following table shows the inports:

Name	Unit	Description
Enable_Trq_Brake_Extern	[0|1|2]	Enable external brake torque request: ▪ 0: Off ▪ 1: Additional external brake torque ▪ 2: Exclusive external brake torque
i_FinalDrive	[]	Final drive ratio
i_Trm	[]	Transmission ratio
Pos_BrakePedal_Driver	[%]	Brake pedal position
SOC_Battery	[%]	Battery state of charge
Sw_DriveMode	[0|1|2]	Drive mode: ▪ 0: Hybrid ▪ 1: ICE only ▪ 2: EM only

Name	Unit	Description
Sw_Recuperation	[0|1]	Switch for recuperation: ▪ 0: Recuperation enabled ▪ 1: Recuperation disabled
Trq_Brake_Req_Extern	[Nm]	External brake torque request
Trq_EM	[Nm]	Current torque electric machine
Trq_Max_Brake	[Nm]	Maximum brake torque

Outports

The following table shows the outports:

Name	Unit	Description
ASMSignalBus	[]	Signal bus that contains signals of ASM components. Refer to ASMSignalBus (ASM User Guide 🕮).
Pos_BrakePedal_Desired	[%]	Desired position of brake pedal
Trq_Request_Brake	[Nm]	Brake torque request
Trq_Request_Recup_EM	[Nm]	Torque request recuperation of the electric machine

Related topics

References

History of the BRAKE_CONTROL Block 517

Clutch Control

Description

The CLUTCH_CONTROL block is used to control the clutch.

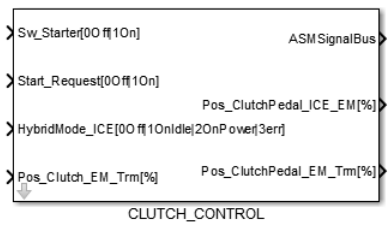

Clutch types

In a hybrid vehicle, there are two types of clutches.

Clutch between output and EM In a hybrid vehicle, the clutch between the EM and the transmission performs the same tasks as a clutch in a conventional vehicle. The driver selects the automatic mode via a gear selector, as in a conventional vehicle. The hybrid manager transmits the driver's signals to the

automatic transmission control unit. The hybrid manager is parent and controls the clutch. When the EM supports the start of the ICE, the hybrid manager overrides the driver request and chooses the neutral position for idling.

Clutch between ICE and EM The second clutch in a hybrid vehicle is positioned between ICE and EM. It is controlled exclusively by the hybrid manager. The clutch decouples the ICE from the powertrain. During start and power output of the ICE, the clutch is closed. It is opened in all other cases.

Inports

The following table shows the inports:

Name	Unit	Description
HybridMode_ICE	[0|1|2|3]	Hybrid mode of ICE ▪ 0: ICE off ▪ 1: ICE on, idle ▪ 2: ICE on, power ▪ 3: Error
Pos_ClutchPedal_EM_Trm	[%]	Position of clutch pedal of clutch between EM and transmission
StarterReq_ICE	[0|1]	Starter request of ICE ▪ 0: Off ▪ 1: On
Sw_Starter	[0|1]	Switch for the starter ▪ 0: Off ▪ 1: On

Outports

The following table shows the outports:

Name	Unit	Description
ASMSignalBus	[]	Signal bus that contains signals of ASM components. Refer to ASMSignalBus (ASM User Guide 🕮).
Pos_Clutch_EM_Trm	[%]	Position of clutch between EM and transmission
Pos_Clutch_ICE_EM	[%]	Position of clutch between ICE and EM

Drive Management

Description

The DRIVE_MANAGEMENT block controls the energy management in the hybrid manager. The energy management uses several input variables to select the ICE mode and operating mode for the hybrid vehicle (hybrid mode). The allocation of the requested drive torque between the ICE and the EM is calculated in the individual hybrid modes. In a parallel hybrid, the requested torque is:

$$T_{Trm,In} = T_{EM} + T_{ICE}$$

where:

$T_{Trm,\ In}$ is the torque at the transmission input shaft

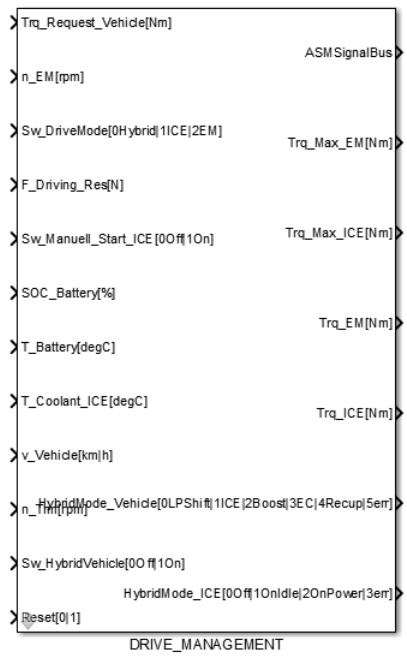

Inports

The following table shows the inports:

Name	Unit	Description
F_Driving_Res	[N]	Force of driving resistance
n_EM	[rpm]	Speed of electric machine
n_Trm	[rpm]	Input of speed transmission
Reset	[0|1]	Reset
SOC_Battery	[%]	State of battery charge
Sw_DriveMode	[0|1|2]	Drive mode ▪ 0: Hybrid ▪ 1: ICE only ▪ 2: EM only
Sw_HybridVehicle	[0|1]	Hybrid vehicle ▪ 0: Off ▪ 1: On
Sw_Manuel_Start_ICE	[0|1]	Manual ICE start ▪ 0: Off ▪ 1: On
T_Battery	[°C]	Battery temperature
T_Coolant_ICE	[°C]	Coolant temperature of ICE

Name	Unit	Description
Trq_Request_Vehicle	[Nm]	Torque request of complete vehicle
v_Vehicle	[km/h]	Vehicle speed

Outports

The following table shows the outports:

Name	Unit	Description
ASMSignalBus	[]	Signal bus that contains signals of ASM components. Refer to ASMSignalBus (ASM User Guide 🕮).
HybridMode_ICE	[0|1|2|3]	Hybrid mode ICE ▪ 0: ICE off ▪ 1: ICE on, idle ▪ 2: ICE on, power ▪ 3: Error
HybridMode_Vehicle	[0|1|2|3|4|5]	Hybrid mode vehicle ▪ 0: Load point shift ▪ 1: ICE ▪ 2: Power boost ▪ 3: EC ▪ 4: Recuperation ▪ 5: Error
Trq_EM	[Nm]	Torque request of EM
Trq_ICE	[Nm]	Torque request of ICE
Trq_Max_EM	[Nm]	Maximum torque of electric machine
Trq_Max_ICE	[Nm]	Maximum torque of ICE

Parameters

The following table shows the parameters:

Name	Unit	Description
Const_SOC_Hyst_Battery	[%]	Hysteresis SOC battery
Const_SOC_Max_Battery	[%]	Maximum SOC battery
Const_SOC_Min_Battery	[%]	Minimum SOC battery
Const_T_Max_Battery	[°C]	Maximum battery temperature
Const_T_Min_Coolant_ICE	[°C]	Minimum coolant temperature ICE
Const_T_Hyst_Battery	[°C]	Hysteresis battery temperature
Const_T_Hyst_Coolant_ICE	[°C]	Hysteresis coolant temperature ICE
Const_Time_HoldState	[s]	Minimum hybrid state duration
Const_Trq_Hyst_EM	[Nm]	Hysteresis torque electric machine
Const_Trq_Min_EM	[Nm]	Minimum torque electric machine
Map_Trq_Max_EM	[Nm]	Maximum torque electric machine =f(n_EM)
Map_Trq_Max_ICE	[Nm]	Maximum torque desired for ICE =f(n_Trm)

Name	Unit	Description
Map_Trq_Opt_ICE	[Nm]	Optimum torque of ICE= f(n_Trm)
StepSize	[s]	Simulation step size
t_Min_ICE	[s]	Minimum running time of ICE

Hybrid modes

The energy management allocates the driver's desired torque across the EM and the ICE. The EM's torque can be negative in generator mode, or positive in motor mode.

The different hybrid modes are:

- Load point shifting: The ICE propels the vehicle and charges the battery via the EM.
- Exclusive ICE mode: The ICE propels the vehicle. The EM is idling.
- Power boost: Both the ICE and the EM propel the vehicle.
- Electric driving: The EM propels the vehicle. The ICE is decoupled from the drivetrain.
- Recuperation: The EM is used as a generator when the vehicle decelerates.

One of the hybrid modes is always active. It is selected via a state machine. For details on the state machine and its transition conditions, refer to Mode shift strategy of hybrid manager (hybrid modes) on page 327. The following description considers energy demand and power output of the individual hybrid modes. The classification of the different hybrid modes is based on the values for EM and ICE required to reach the driver's desired torque. When the vehicle is driving, the energy management selects the hybrid mode according to the desired torque, driving resistance (e.g., slope, speed), battery status, and other external factors.

The following table shows a comparison of the different hybrid modes:

Hybrid modes	Torque		
	Driver request	ICE	Electric motor
Load point shifting	Low to medium	High	Negative (generator)
Exclusive ICE mode	Low to medium	Low to medium	Zero
Power boost	Very high	Very high	Positive (motor)
Electric driving	Low	Zero	Positive (motor)
Recuperation	Negative	Zero	Negative (generator)

The different hybrid modes are described in more detail in the following:

Load point shifting In *load point shifting* mode, the ICE has a higher torque than the driver requested. The additional torque is used to charge the battery. The battery is discharged in the electric driving or power boost modes. An increasing torque boosts ICE efficiency and overall efficiency.

Exclusive ICE mode In *exclusive ICE* mode, the vehicle is propelled exclusively by the ICE, similar to a conventional vehicle. Exclusive ICE mode can be a sensible

option when the driver desires a high torque needed for high driving resistance (high velocity, slope) or during moderate acceleration.

Power boost In *power boost* mode, the EM supports the ICE with additional torque to reach a high desired torque. An activated power boost decreases the overall efficiency. From an economic point of view, using the power boost is sensible only if the battery is fully charged and recuperation is not possible. In power boost mode, the vehicle's overall power is greater than the ICE's power.

Electric driving In *electric driving* mode, the vehicle is propelled exclusively by the EM. The clutch between the ICE and the EM is open.

Recuperation *Recuperation* is a technical term for energy recuperation during the braking process of hybrid vehicles. In this mode, a part of the vehicle's kinetic energy is fed into the battery via the EM during the braking process initiated by the driver.

Related topics

References

Drive Management (ModelDesk Parameterizing 🕮)

Key Signals ICE

Description

The KEY_SIGNALS_ICE block controls the generation of ignition switch signals of the ICE. The output signals are generated as a function of the following three input signals.

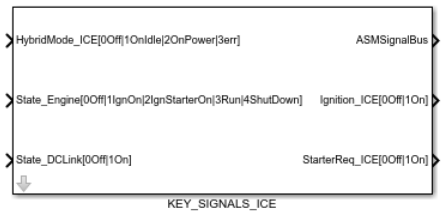

Inports

The following table shows the inports:

Name	Unit	Description
HybridMode_ICE	[0|1|2|3]	Hybrid mode ICE ▪ 0: ICE off ▪ 1: ICE on, idle ▪ 2: ICE on, power ▪ 3: Error

Name	Unit	Description
State_DCLink	[0|1]	Status of DC Link: ▪ 0: Off ▪ 1: On
State_Engine	[0|1|2|3|4]	State of engine: ▪ 0: ICE off ▪ 1: ICE ignition on ▪ 2: Ignition and starter on ▪ 3: Running ▪ 4: Stopping

Outports

The following table shows the outports:

Name	Unit	Description
ASMSignalBus	[]	Signal bus that contains signals of ASM components. Refer to ASMSignalBus (ASM User Guide 🕮).
Ignition_ICE	[0|1]	Ignition ICE ▪ 0: Off ▪ 1: On
StarterReq_ICE	[0|1]	Starter request ICE ▪ 0: Off ▪ 1: On

Parameters

The following table shows the parameters:

Name	Unit	Description
Const_t_Max_StarterReq	[s]	Maximal starter request on time

Initial states

The four possible initial states are listed in the following table:

HybridMode_ICE	State_Engine	Ignition_ICE	StarterReq_ICE
0 or 3	irrelevant	off	off
1 or 2	0, 1, or 2	on	on
1 or 2	3 or 4	on	off

Related topics

References

History of the KEY_SIGNALS_ICE Block 523
Key Signals ICE (ModelDesk Parameterizing 🕮)

Hybrid Vehicle Switch

Description

Depending on the key signals, the HYBRID_VEHICLE_SWITCH block switches the hybrid vehicle on or off.

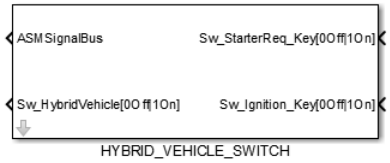

Inports

The following table shows the inports:

Name	Unit	Description
Sw_StarterReq_Key	[0|1]	Starter request from key ▪ 0: Off ▪ 1: On
Sw_Ignition_Key	[0|1]	Ignition key of hybrid vehicle ▪ 0: Off ▪ 1: On

Outports

The following table shows the outports:

Name	Unit	Description
ASMSignalBus	[]	Signal bus that contains signals of ASM components. Refer to ASMSignalBus (ASM User Guide 🕮).
Sw_HybridVehicle	[0|1]	Hybrid vehicle ▪ 0: Off ▪ 1: On

Starter ICE

Description

In a conventional vehicle, an electric starter starts the ICE. The starter drags the engine to the operating speed range (idle rotational speed to rotational speed limit) until the engine runs without external influence.

In a hybrid vehicle, the EM or the vehicle's output drive function as the starter. When the EM is propelling the vehicle, the clutch between the ICE and the EM is closed, so the EM's output drive drags the ICE. When the transmission input speed drops below the ICE's idle speed, the second clutch between the EM and the output is opened, so the EM can drag the ICE.

The transmission input speed may be too low because:

- No gear is engaged.
- The vehicle speed is too high for the engaged gear.
- The vehicle is idling.

The STARTER_ICE block uses the transmission input speed and the starter request to decide whether and which torque is necessary to start. The KEY_SIGNALS_ICE block generates the StarterReq_ICE signal, which is the starter request.

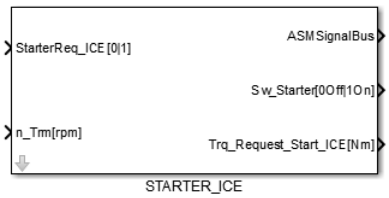

Inports

The following table shows the inports:

Name	Unit	Description
StarterReq_ICE	[0|1]	Starter request of ICE ▪ 0: Off ▪ 1: On
n_Trm	[rpm]	Transmission input speed

Outports

The following table shows the outports:

Name	Unit	Description
ASMSignalBus	[0|1]	Signal bus that contains signals of ASM components. Refer to ASMSignalBus (ASM User Guide 🕮).
Sw_Starter	[]	Switch for starter: ▪ 0: Off ▪ 1: On
Trq_Request_start_ICE	[Nm]	ICE starter torque request

Parameters

The following table shows the parameters:

Name	Unit	Description
Const_n_Max_Starter	[rpm]	Maximum starter speed
Const_Trq_Max_Starter	[Nm]	Maximum starter torque
Const_n_Min_Trm_Starter	[rpm]	Minimum transmission speed requested to start engine
Const_n_Min_Trm_Hyst_Starter	[rpm]	Hysteresis minimal transmission speed detection for start engine request

Related topics

References

History of the STARTER_ICE Block..... 535
Starter ICE (ModelDesk Parameterizing 🕮)

Torque Request Coordination

Description

The requested drive torque is one of the most important input values for the drive management (operating strategy). The positions of the brake and accelerator pedals set the requested torque.

If the position of the brake pedal is greater than zero percent, the position of the accelerator pedal is neglected. The **TRQ_REQUEST_COORDINATION** block transmits the EM's brake torque to the energy management for recuperation. The brake torque now represents the driver's requested torque. If the brake pedal is in its default position, the driver's requested torque depends on the accelerator pedal. The **Sw_TrqRequest** parameter defines if the relation of the accelerator pedal and the maximum EM and ICE torque is used to calculate the driver's requested torque or if the driver's torque is calculated from the EM and ICE torque look-up table.

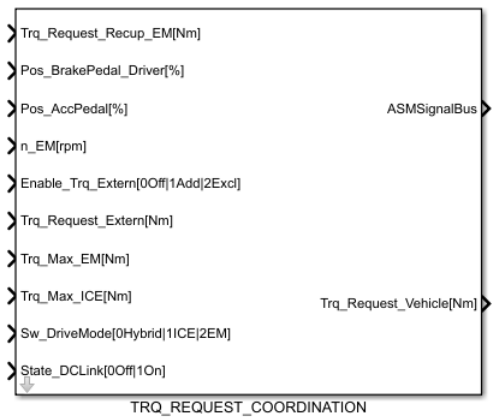

Inports

The following table shows the inports:

Name	Unit	Description
Enable_Trq_Extern	[0|1|2]	Enable external torque request ▪ 0: Off ▪ 1: Additional external torque ▪ 2: Exclusive external torque
n_EM	[rpm]	Speed of electric machine

Name	Unit	Description
Pos_AccPedal	[%]	Accelerator pedal position
Pos_BrakePedal_Driver	[%]	Brake pedal position
State_DCLink	[0|1]	Switch to set the torque request to zero if the DC link is not active: ▪ 0: DC link is off, torque request is set to zero. ▪ 1: DC link is active, torque request is set.
Sw_DriveMode	[0|1|2]	The mode defines which torque table is used to set the torque request: ▪ 0: Hybrid - The sum torque of the ICE and EM torque tables **Map_ICE_Torque** and **Map_EC_Torque** is used. ▪ 1: ICE - The torque of the ICE torque table **Map_ICE_Torque** is used. ▪ 2: EM - The torque of the EM torque table **Map_EC_Torque** is used.
Trq_Max_EM	[Nm]	Maximum torque of electric machine
Trq_Max_ICE	[Nm]	Maximum torque of ICE
Trq_Request_Extern	[Nm]	External torque request
Trq_Request_Recup_EM	[Nm]	Torque request recuperation of electric machine

Outports

The following table shows the outports:

Name	Unit	Description
ASMSignalBus	[]	Signal bus that contains signals of ASM components. Refer to ASMSignalBus (ASM User Guide 🕮).
Trq_Request_Vehicle	[Nm]	Torque request of complete vehicle

Parameters

The following table shows the parameters:

Name	Unit	Description
Map_EC_Torque	[Nm]	Torque EC = f(n[rpm], Pos_AccPedal[%])
Map_ICE_Torque	[Nm]	Torque ICE = f(n[rpm], Pos_AccPedal[%])
Sw_TrqRequest	[0|1]	Switch to calculate desired vehicle torque based on: ▪ 0: Table containing the sum of EC and ICE torques ▪ 1: Linear relation of maximum torque and accelerator pedal position

Related topics

References

History of the TRQ_REQUEST_COORDINATION Block 540
Torque Request Coordination (ModelDesk Parameterizing 🕮)

Mechanics

Where to go from here

Information in this section

Engine Inertia..... 147
The model simulates the mechanics of an engine shaft.

Engine Position..... 149
The model simulates the position integration of an engine shaft.

Engine Inertia

Description

The model simulates the mechanics of an engine shaft.

The next illustration shows the Simulink representation of the engine inertia.

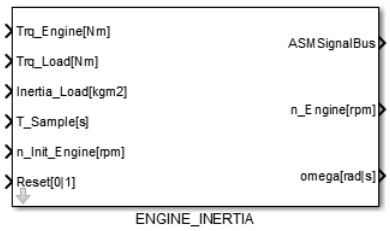

The equation of the system can be written as

$$\omega_{Engine} = \frac{1}{J_{Engine} + J_{Load}} \int \left(Trq_{Engine} - Trq_{Load} \right) dt$$

where:

ω_{Engine}	is the engine speed
$\mathrm{Trq}_{\mathrm{Engine}}$	is the engine torque
$\mathrm{Trq}_{\mathrm{Load}}$	is the load torque
J_{Engine}	is the engine shaft inertia
J_{Load}	is the load inertia

Inports

The following table shows the inports:

Name	Unit	Description
Inertia_Load	[kg m^2]	Load inertia
n_Init_Engine	[rpm]	Initial engine speed
Reset	[]	Reset
T_Sample	[s]	Sample time
Trq_Engine	[Nm]	Engine torque
Trq_Load	[Nm]	Load torque

Outports

The following table shows the outports:

Name	Unit	Description
ASMSignalBus	[]	Signal bus that contains signals of ASM components. Refer to ASMSignalBus (ASM User Guide 🕮).
n_Engine	[rpm]	Engine speed
omega_Engine	[rad/s]	Engine rotational speed

Parameter

The following table shows the block parameters:

Name	Unit	Description
Const_Damping	[Nm/(rad/s)]	Damping coefficient
Const_Inertia	[kg m^2]	Motor inertia

Related topics

References

Engine Inertia (ModelDesk Parameterizing 🕮)
History of the ENGINE_INERTIA Block..... 521

Engine Position

Description

The model simulates the position integration of an engine shaft.

The next illustration shows the Simulink representation of the engine position.

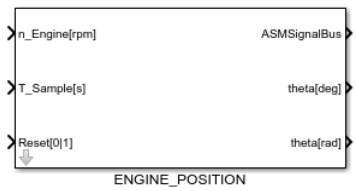

The equation of the system can be written as

$$\varepsilon_{\mathrm{Engine}} = \int \left(\omega_{\mathrm{Engine}}\right) \mathrm{dt}$$

where:

ω_{Engine} is the engine speed

$\varepsilon_{\mathrm{Engine}}$ is the engine position

Inports

The following table shows the inports:

Name	Unit	Description
n_Engine	[rpm]	Engine speed
Reset	[]	Reset
T_Sample	[s]	Sample time

Outports

The following table shows the outports:

Name	Unit	Description
ASMSignalBus	[]	Signal bus that contains signals of ASM components. Refer to ASMSignalBus (ASM User Guide 🕮).
theta	[deg]	Engine position in degrees
theta	[rad]	Engine position in radian

Related topics

References

Engine Position..... 149

Utils

Where to go from here

Information in this section

Anti-Aliasing and Power Calculation..... 152
This system performs anti-aliasing filters for motor torque and DC link current.

Current or Voltage Conversion of Three-Phase Systems..... 153
The system represents a current or voltage conversion from three-phase supply variables to three-phase machine variables.

Discrete Differentiator..... 157
The system performs a discrete-time differentiation of its input signal.

Discrete Integrator..... 157
The system performs a discrete-time integration of its input signal.

Discrete PT1..... 158
The system simulates a discrete first order lag element.

Duty Cycle Evaluation..... 159
The block presents the inverter status regarding to the duty cycles inputs.

Duty Cycles Routing..... 160
The DUTYCYCLES_ROUTING block allows a change of the order of input duty cycles according to the input type.

Park Clarke Transformation..... 161
The system represents a Clarke and/or Park transformation for electric motor applications depending on the mask configuration.

Park Modulator..... 163
The system calculates the sines and cosines of the angle input to be used as a signal source for the transformation block.

Phase Arrangement..... 163
The ASM_EC_ROUTING block performs a change of phase order for three phase systems.

Signals Routing..... 164
This block allows a change of order of the input signals. Signals can be multiplied by a proportional gain and saturated.

S-R Flip-Flop..... 165
The S-R flip-flop is also known as a set-reset flip-flop.

Anti-Aliasing and Power Calculation

Description

This system performs anti-aliasing filters for motor torque and DC link current. The DC link current output can be switched between input and calculation. The calculation is based on the mechanic motor power and the motor copper losses.

The block can be used to send the mean values of the fast signals to the slower task when the electric motor simulation and the environment (Battery and Drivetrain) are in different tasks (different sample times).

The next illustration shows the Simulink representation of the anti-aliasing and power calculation block.

Inports

The following table shows the inports:

Name	Unit	Description
I_DCLink	[A]	DC link current
i_Stator[a;b;c]	[A]	Motor current [a;b;c]
Inverter_active	[0|1]	Inverter status
omega	[rad/s]	Mechanical angle speed of the motor
T_Sample	[s]	Sample time

Name	Unit	Description
Trq	[Nm]	Motor torque
V_DCLink	[V]	DC link voltage

Outports

The following table shows the outports:

Name	Unit	Description
I_DCLink_filtered	[A]	Filtered DC link current
Power_Inverter	[W]	Inverter power
Power_Motor_mech	[W]	Mechanical motor power
Trq_filtered	[Nm]	Filtered motor torque

Parameter

The following table shows the block parameters:

Name	Unit	Description
Const_AntiAliasingFilterTime	[s]	Anti-aliasing filter time constant
Const_LimitInverterCurrent	[A]	Inverter current limit
Const_LossResistance	[Ω]	Motor loss resistance
SW_InverterCurrent	[1|2]	Switch current output ▪ 1: From inverter model ▪ 2: From power calculation

Current or Voltage Conversion of Three-Phase Systems

Description

The system represents a current or voltage conversion from three-phase supply variables to three-phase machine variables (in both directions), depending on how the machine is configured.

The following illustration shows the two main configurations:

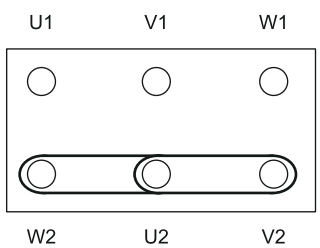

Three-phase machine, star-connected

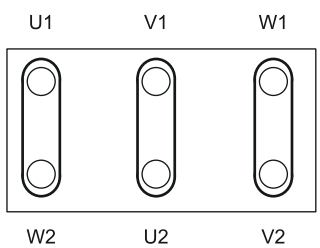

Three-phase machine, delta-connected

For the star-connected machine, the terminals *U2*, *V2*, and *W2* are interconnected in the terminal box on the machine.

For the delta-connected machine, the terminal pairs *(U1, W2)*, *(V1, U2)*, *(W1, V2)* are interconnected in a clockwise way, as shown in the illustration. The terminal pairs *(U1, V2)*, *(V1, W2)*, *(W1, U2)* are interconnected in a counterclockwise way in the terminal box on the machine.

The following illustration shows the Simulink representation of the ASM_EC_STARDELTA block.

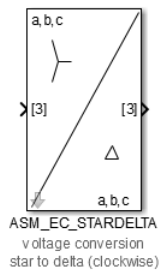

Star-connected machine

If the input and output variables are in a star connection, the machine phases have a common neutral point, as shown in the following illustration:

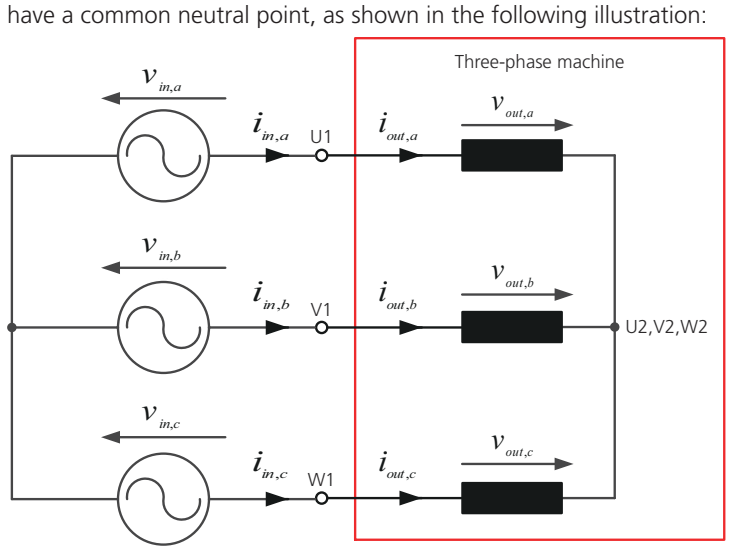

With these variables, the following expressions are valid:

$$\begin{bmatrix} v_{out,a} \\ v_{out,b} \\ v_{out,c} \end{bmatrix} = \begin{bmatrix} 1 & 0 & 0 \\ 0 & 1 & 0 \\ 0 & 0 & 1 \end{bmatrix} \cdot \begin{bmatrix} v_{in,a} \\ v_{in,b} \\ v_{in,c} \end{bmatrix}$$

$$\begin{bmatrix} i_{out,a} \\ i_{out,b} \\ i_{out,c} \end{bmatrix} = \begin{bmatrix} 1 & 0 & 0 \\ 0 & 1 & 0 \\ 0 & 0 & 1 \end{bmatrix} \cdot \begin{bmatrix} i_{in,a} \\ i_{in,b} \\ i_{in,c} \end{bmatrix}$$

Note

Here, the zero sequence voltage is not considered in the transformation.

The inverse is specified by:

$$\begin{bmatrix} v_{in,a} \\ v_{in,b} \\ v_{in,c} \end{bmatrix} = \begin{bmatrix} 1 & 0 & 0 \\ 0 & 1 & 0 \\ 0 & 0 & 1 \end{bmatrix} \cdot \begin{bmatrix} v_{out,a} \\ v_{out,b} \\ v_{out,c} \end{bmatrix}$$

$$\begin{bmatrix} i_{in,a} \\ i_{in,b} \\ i_{in,c} \end{bmatrix} = \begin{bmatrix} 1 & 0 & 0 \\ 0 & 1 & 0 \\ 0 & 0 & 1 \end{bmatrix} \cdot \begin{bmatrix} i_{out,a} \\ i_{out,b} \\ i_{out,c} \end{bmatrix}$$

Delta-connected machine

If the input variables are in a star connection and the output variables are in a delta connection (clockwise), the machine phases do not have a common neutral point. This is shown in the following illustration:

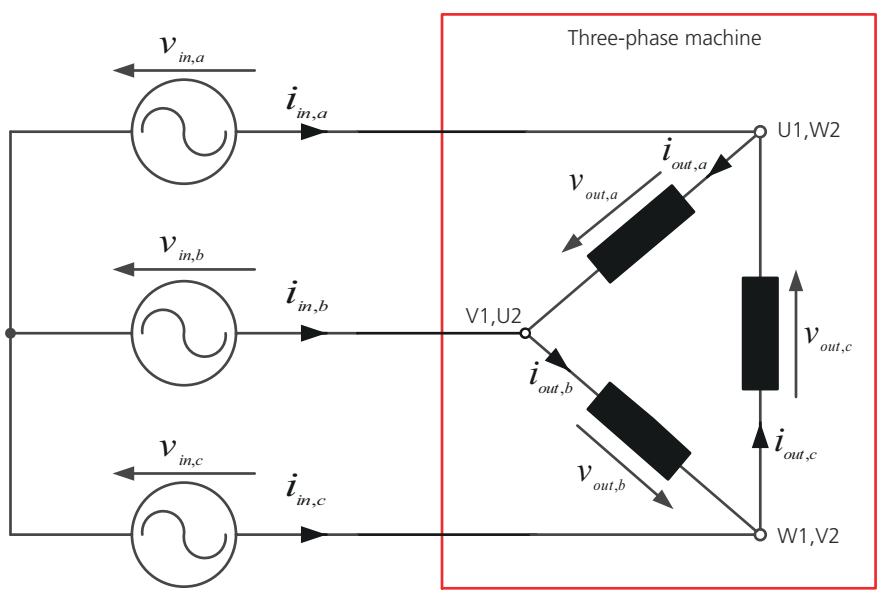

With these variables, the following expressions are valid:

$$\begin{bmatrix} v_{out,a} \\ v_{out,b} \\ v_{out,c} \end{bmatrix} = \begin{bmatrix} 1 & -1 & 0 \\ 0 & 1 & -1 \\ -1 & 0 & 1 \end{bmatrix} \cdot \begin{bmatrix} v_{in,a} \\ v_{in,b} \\ v_{in,c} \end{bmatrix}$$

$$\begin{bmatrix} i_{out,a} \\ i_{out,b} \\ i_{out,c} \end{bmatrix} = \begin{bmatrix} \frac{1}{3} & -\frac{1}{3} & 0 \\ 0 & \frac{1}{3} & -\frac{1}{3} \\ -\frac{1}{3} & 0 & \frac{1}{3} \end{bmatrix} \cdot \begin{bmatrix} i_{in,a} \\ i_{in,b} \\ i_{in,c} \end{bmatrix}$$

Note

Here, the zero sequence current is not considered in the transformation.

The inverse is specified by:

$$\begin{bmatrix} v_{in,a} \\ v_{in,b} \\ v_{in,c} \end{bmatrix} = \begin{bmatrix} \frac{1}{3} & 0 & -\frac{1}{3} \\ -\frac{1}{3} & \frac{1}{3} & 0 \\ 0 & -\frac{1}{3} & \frac{1}{3} \end{bmatrix} \cdot \begin{bmatrix} v_{out,a} \\ v_{out,b} \\ v_{out,c} \end{bmatrix}$$

$$\begin{bmatrix} i_{in,a} \\ i_{in,b} \\ i_{in,c} \end{bmatrix} = \begin{bmatrix} 1 & 0 & -1 \\ -1 & 1 & 0 \\ 0 & -1 & 1 \end{bmatrix} \cdot \begin{bmatrix} i_{out,a} \\ i_{out,b} \\ i_{out,c} \end{bmatrix}$$

Parameters

The following table shows the parameters:

Name	Unit	Description
Component-wise input	[]	If selected, the input signals are separated by component, otherwise they are combined into a vector
Component-wise output	[]	If selected, the output signals are separated by component, otherwise they are combined into a vector
Input	[]	Input signal transformation to: ▪ Star ▪ Delta (clockwise) ▪ Delta (counterclockwise)
Output	[]	Output signals transformed to: ▪ Star ▪ Delta (clockwise) ▪ Delta (counterclockwise)
Type	[]	Type of conversion: ▪ Current conversion ▪ Voltage conversion

Related topics

References

History of the ASM_EC_STARDELTA Block..... 509

Discrete Differentiator

Description

The system performs a discrete-time differentiation of its input signal. The implemented integration method is Backward Euler.

The equation of the system can be written as

$$y(k) = \frac{1}{T_{Sample}} \cdot (e(k) - e(k-1))$$

The next illustration shows the Simulink representation of the differentiator block.

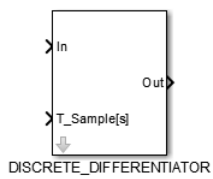

Inports

The following table shows the inports:

Name	Unit	Description
In	[ ]	Input value
T_Sample	[s]	Sample time

Outports

The following table shows the outports:

Name	Unit	Description
Out	[ ]	Time discrete derivative of the input signal

Discrete Integrator

Description

The system performs a discrete-time integration of its input signal. The implemented integration method is Backward Euler.

The equation of the system can be written as

$$y(k) = T_{Sample} \cdot e(k) + y(k-1) + y_0$$

The next illustration shows the Simulink representation of the integrator block.

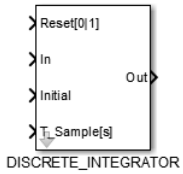

Inports

The following table shows the inports:

Name	Unit	Description
In	[]	Input value
Initial	[]	Initial value
Reset	[0|1]	Reset the integrator
T_Sample	[s]	Sample time

Outports

The following table shows the outports:

Name	Unit	Description
Out	[]	Time discrete integration of the input signal

Parameter

The following table shows the block parameters:

Name	Unit	Description
lower_limit	[]	Lower limit for integrator saturation
upper_limit	[]	Upper limit for integrator saturation

Discrete PT1

Description

The system simulates a discrete first order lag element. The implemented integration method is Backward Euler.

The equation of the system can be written as

$$y(k) = \frac{K \cdot T_{Sample}}{\left(T_{Sample} + T\right)} \cdot e(k) + \frac{T}{T_{Sample} + T} \cdot y(k-1)$$

The next illustration shows the Simulink representation of the integrator block.

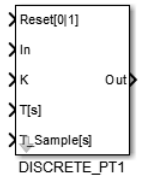

Inports

The following table shows the inports:

Name	Unit	Description
In	[]	Input value
K	[]	Gain value
Reset	[0|1]	Reset the integrator
T	[s]	Time constant
T_Sample	[s]	Sample time

Outports

The following table shows the outports:

Name	Unit	Description
Out	[]	Time-discrete integration of the input signal

Parameter

The following table shows the block parameters:

Name	Unit	Description
lower_limit	[]	Lower limit for integrator saturation
upper_limit	[]	Upper limit for integrator saturation

Duty Cycle Evaluation

Description

This block presents the inverter status regarding to the duty cycles inputs.

The next illustration shows the Simulink representation of the duty cycle evaluation block.

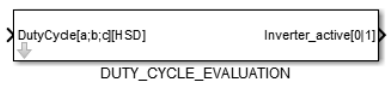

Inports

The following table shows the inports:

Name	Unit	Description
DutyCycle[a;b;c][HSD]	[0_1]	Duty cycle of the high-side driver (phase a;b;c)

Outports

The following table shows the outports:

Name	Unit	Description
Inverter_active	[0|1]	Inverter status

Duty Cycles Routing

Description

The DUTYCYCLES_ROUTING block allows changing the order of the input duty cycles according to the input type.

The following illustration shows the Simulink representation of the block.

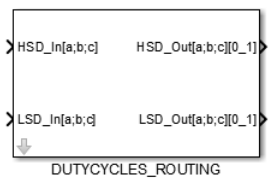

Parameters

The following table shows the parameters:

Name	Unit	Description
Input type	[%] [0_1]	Duty cycles in percent or in the range between 0 and 1
Switch Location	[]	Duty cycles of switches that need to be changed: ▪ HSD_x, with x = a or b or c ▪ LDS_x, with x = a or b or c

Related topics

References

History of the DUTYCYCLES_ROUTING Block..... 520

Park Clarke Transformation

Description

The system represents a Clarke and/or Park transformation for electric motor applications depending on the mask configuration.

Clarke-transformation The equation of the system can be written as *Clarke-transformation:*

Orthogonal components for three-phase system:

$$\begin{bmatrix} x_\alpha \\ x_\beta \\ x_0 \end{bmatrix} = \begin{bmatrix} \frac{2}{3} & -\frac{1}{3} & -\frac{1}{3} \\ 0 & \frac{1}{\sqrt{3}} & -\frac{1}{\sqrt{3}} \\ \frac{1}{3} & \frac{1}{3} & \frac{1}{3} \end{bmatrix} \cdot \begin{bmatrix} x_a \\ x_b \\ x_c \end{bmatrix}$$

This form is invariant with respect to reference values: $x_\alpha = x_a$ when $x_0 = 0.$, i.e., the transformation is amplitude invariant

Moreover, $x_0 = \frac{1}{3}\sum i = a,\ b, c\, x_i$ is the average value of components x_a, x_b, x_c.

The corresponding Inverse Clarke-transformation is

$$\begin{bmatrix} x_a \\ x_b \\ x_c \end{bmatrix} = \begin{bmatrix} 1 & 0 & 1 \\ -\frac{1}{2} & \frac{\sqrt{3}}{2} & 1 \\ -\frac{1}{2} & -\frac{\sqrt{3}}{2} & 1 \end{bmatrix} \cdot \begin{bmatrix} x_\alpha \\ x_\beta \\ x_0 \end{bmatrix}$$

A different form of Clarke-transformation is invariant with respect to power (power invariant transformation):

$$\begin{bmatrix} x_\alpha \\ x_\beta \\ x_0 \end{bmatrix} = \sqrt{\frac{3}{2}} \begin{bmatrix} \frac{2}{3} & -\frac{1}{3} & -\frac{1}{3} \\ 0 & \frac{1}{\sqrt{3}} & -\frac{1}{\sqrt{3}} \\ \frac{\sqrt{2}}{3} & \frac{\sqrt{2}}{3} & \frac{\sqrt{2}}{3} \end{bmatrix} \cdot \begin{bmatrix} x_a \\ x_b \\ x_c \end{bmatrix}$$

Note

The forms differ not only in factor $\sqrt{\frac{3}{2}}$, but also in the definition of x_0.

The corresponding inverse Clarke-transformation is

$$\begin{bmatrix} x_a \\ x_b \\ x_c \end{bmatrix} = \sqrt{\frac{2}{3}} \begin{bmatrix} 1 & 0 & \frac{1}{\sqrt{2}} \\ -\frac{1}{2} & \frac{\sqrt{3}}{2} & \frac{1}{\sqrt{2}} \\ -\frac{1}{2} & -\frac{\sqrt{3}}{2} & \frac{1}{\sqrt{2}} \end{bmatrix} \cdot \begin{bmatrix} x_\alpha \\ x_\beta \\ x_0 \end{bmatrix}$$

Park-transformation Park-transformation: Transformation of orthogonal components to a reference system which is turned by a certain angle. The amount (geometric mean value) is unchanged:

$$\begin{bmatrix} x_a \\ x_b \end{bmatrix} = \begin{bmatrix} \cos(\varepsilon) & \sin(\varepsilon) \\ -\sin(\varepsilon) & \cos(\varepsilon) \end{bmatrix} \cdot \begin{bmatrix} x_\alpha \\ x_\beta \end{bmatrix}$$

The corresponding Inverse Park-transformation is

$$\begin{bmatrix} x_\alpha \\ x_\beta \end{bmatrix} = \begin{bmatrix} \cos(\varepsilon) & -\sin(\varepsilon) \\ \sin(\varepsilon) & \cos(\varepsilon) \end{bmatrix} \cdot \begin{bmatrix} x_a \\ x_b \end{bmatrix}$$

The next illustration shows the Simulink representation of the transformation block.

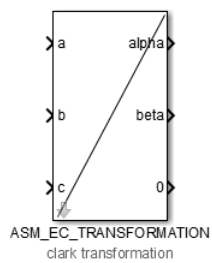

The inputs and outputs vary according to the block configuration.

Parameter

The following table shows the block parameters:

Name	Unit	Description
Component wise input	[]	If this function is selected, the inputs are displayed component wise, otherwise the signals are muxed.
Component wise output	[]	If this function is selected, the outputs are displayed component wise, otherwise the signals are muxed.
Cos/Sin vector input	[]	Generate sin and cos input, so turnaround times can be saved, because you have to call the sin and cos functions only at one point with the Park modulator.
Intermediate values	[]	Internal values are routed to the output port
Power-invariant transformation	[]	A different form of Clarke-transformation is invariant with respect to power
Transformation	[]	abc -> alpha/beta (Clarke-transformation) alpha/beta -> abc (inverse Clarke-transformation) alpha/beta -> d/q (Park-transformation) d/q -> alpha/beta (inverse Park-transformation) abc -> d/q (Clarke and Park-transformation) d/q -> abc (inverse Clarke and Park-transformation)
Zero component	[]	Generate the zero component output

Park Modulator

Description

The system calculates the sines and cosines of the angle input to be used as a signal source for the transformation block.

The following illustration shows the Simulink representation of the modulator.

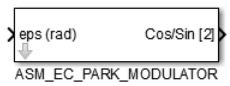

The equation of the system can be written as

$$\mathrm{Out}_{\mathrm{sine}} = \sin(\mathrm{eps})$$

$$\mathrm{Out}_{\mathrm{cosine}} = \cos(\mathrm{eps})$$

where:

eps is an angle

Inports

The following table shows the inports:

Name	Unit	Description
eps	[rad]	Angle

Outports

The following table shows the outports:

Name	Unit	Description
Cos/Sin	[ ]	Cosine and sine of the input angle

Phase Arrangement

Description

The ASM_EC_ROUTING block performs a change of phase order for three phase systems.

The following illustration shows the Simulink representation of the block.

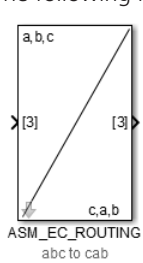

Parameters

The following table shows the parameters:

Name	Unit	Description
Component wise input	[]	If selected, the input signals are separated component-wise. Otherwise they are combined into a vector.
Component wise output	[]	If selected, the output signals are separated component-wise. Otherwise they are combined into a vector.
Input	[]	Specifies the phases that need to be arranged: ▪ abc ▪ acb ▪ bac ▪ bca ▪ cab ▪ cba
Output	[]	Specifies into which quantities the output signals are transformed: ▪ abc ▪ acb ▪ bac ▪ bca ▪ cab ▪ cba

Related topics

References

History of the ASM_EC_ROUTING Block..... 508

Signals Routing

Description

This block allows changing the order of the input signals. Signals can be multiplied by a proportional gain and saturated.

The following illustration shows the Simulink representation of the SIGNALS_ROUTING block.

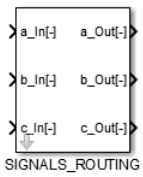

Parameters

The following table shows the parameters:

Name	Unit	Description
Gain factor input a	[]	Proportional gain of input signal a
Gain factor input b	[]	Proportional gain of input signal b
Gain factor input c	[]	Proportional gain of input signal c
Saturation	[]	Limit of output signal
Switch location	[]	Duty cycles of switches that need to be changed: ▪ A ▪ B ▪ C

Related topics

References

History of the SIGNALS_ROUTING Block..... 532

S-R Flip-Flop

Description

The S-R flip-flop is also known as a set-reset flip-flop. This implementation is modeled after an S-R flip-flop constructed using NOR gates. The truth table for this block is:

S	R	Q	!Q	
1	0	1	0	
0	0	1	0	(after S == 1, R == 0)
0	1	0	1	
0	0	0	1	(after S == 0, R == 1)
1	1	0	0	

In an S-R flip-flop that is implemented with NOR gates, when a 1 is applied to both the set and reset inputs, both outputs go to 0. Technically, this state is undefined and is usually avoided.

Note

If the flip-flop is implemented with NAND gates, when a 0 is applied to both inputs, both outputs go to 0 and when a 1 is applied to both inputs, the output depends on the previous state of the flip-flop (previous value of Q).

The following illustration shows the Simulink representation of the block.

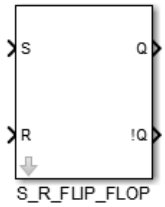

Inports

The following table shows the inports:

Name	Unit	Description
S	[0|1]	Set output
R	[0|1]	Reset output

Outports

The following table shows the outports:

Name	Unit	Description
Q	[0|1]	Output
!Q	[0|1]	Inverse output

Parameter

The following table shows the block parameters:

Name	Unit	Description
initial_condition	[]	Initial condition (state of Q)

Vehicle Electrical System

Where to go from here

Information in this section

Electric Machines.....168
Accumulator.....176
Electric Loads.....200

Electric Machines

Where to go from here

Information in this section

Alternator 168
Alternators are used in cars to charge the battery and to power a car's electric system when its engine is running.

Starter 171
The starter is a battery-driven DC motor for gearing up an engine to speeds at which it has to be cranked.

Alternator

Description

Alternators are used in cars to charge the battery and to power a car's electric system when its engine is running.

The alternator must supply sufficient current to the vehicle's electrical system under all operating conditions to ensure that the state of charge in the energy storage device (battery) is consistently maintained at an adequate level [Bos02].

The rotational speed of the alternator is proportional to the rotational speed of the engine crankshaft. The alternator and engine crankshaft are therefore connected via a transmission.

The next illustration shows the Simulink representation of the alternator.

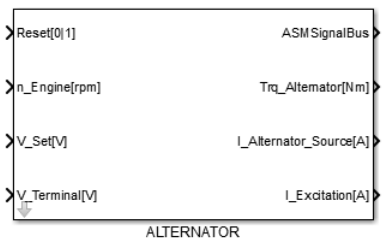

The alternator is modeled as a DC generator with an exciter winding and an armature circuit. The exciter winding generates a magnetic flux which induces a voltage in the armature circuit. The model calculates alternator current according to the terminal voltage and the inner resistance and the inductance of the armature circuit.

A generator reference-arrow system is used for the alternator. The current flowing out of the alternator is positive.

The next illustration shows the equivalent circuit diagram of the model.

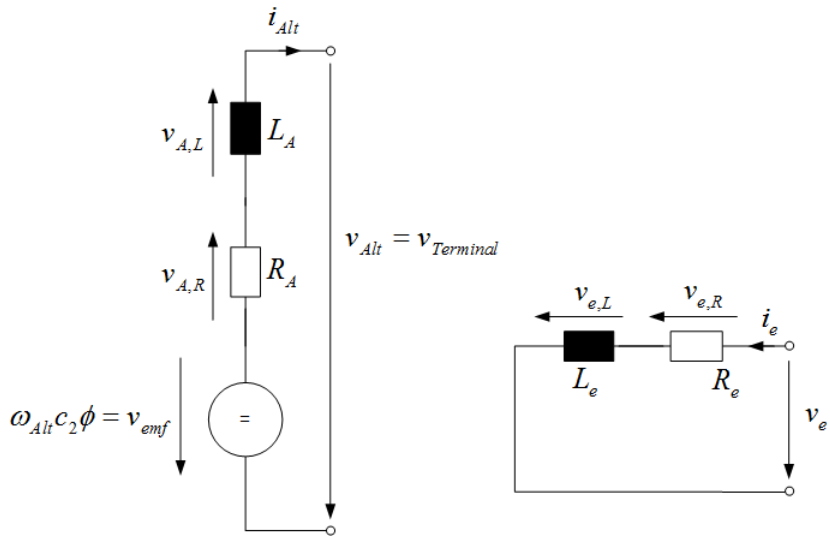

Mode of machine operation:

$v_{\text{emf}} = \omega_{\text{Alt}}\, c_2\, \phi$

$Trq_{\text{Alt}} = i_{\text{Alt}}\, c_2\, \phi$

Alternator:

$$v_{\text{Alt}} = v_{\text{emf}} - R_A\, i_{\text{Alt}} - L_A \frac{di_{\text{Alt}}}{dt}$$

Exciter:

$$v_e = R_e\, i_e + L_e \frac{di_e}{dt}$$

where:

v_{Alt}	is the alternator voltage
i_{Alt}	is the alternator current
Trq_{Alt}	is the alternator torque
R_A	is the alternator resistance
L_A	is the alternator inductance
c_2	is the machine stator constant
v_e	is the exciter voltage
i_e	is the exciter current
R_e	is the exciter resistance
L_e	is the exciter inductance
c_1	is the machine exciter constant
ω_{Alt}	is the rotational speed
ϕ	is the magnetic flux

To control the alternator voltage or rather the output current, an exciter voltage controller is used. The model provides a PI or a two-point controller.

The next illustration shows the control diagram of the alternator model.

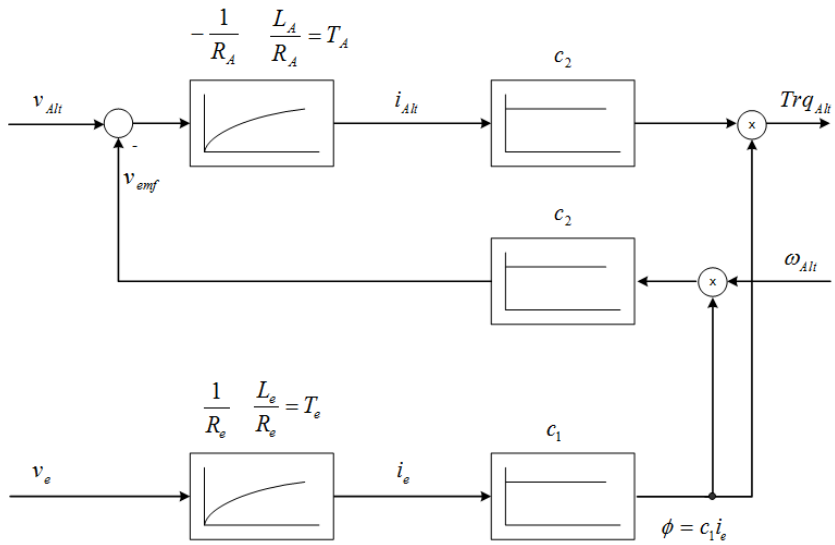

Inports

The following table shows the inports:

Name	Unit	Description
n_Engine	[rpm]	Engine speed
Reset	[0|1]	Reset
V_Set	[V]	Voltage setpoint
V_Terminal	[V]	Terminal voltage

Outports

The following table shows the outports:

Name	Unit	Description
ASMSignalBus	[]	Signal bus that contains signals of ASM components. Refer to ASMSignalBus (ASM User Guide 🕮).
I_Alternator_Source	[A]	Alternator current
I_Excitation	[A]	Excitation current
Trq_Alternator	[Nm]	Alternator torque

Parameter

The following table shows the block parameters:

Name	Unit	Description
Const_I_Max_Exciter	[A]	Maximal exciter current
Const_k_Exciter	[Vs/A]	Machine exciter constant c1
Const_k_Stator	[]	Machine stator constant c2
Const_Ki	[]	Integral regulation factor
Const_Kp	[]	Proportional regulation factor
Const_L_Armature	[H]	Armature inductance
Const_L_Exciter	[H]	Exciter inductance
Const_PolePairs	[]	Number of pole pairs
Const_R_Armature	[Ω]	Armature resistance
Const_R_Exciter	[Ω]	Exciter resistance
Const_TransmissionRatio	[]	Transmission ratio engine to alternator speed
StepSize	[s]	Simulation step size
Sw_VoltageController	[0|1]	Switch exciter voltage controller ▪ 0: PI controller ▪ 1: Two-point controller

Related topics

References

Alternator (ModelDesk Parameterizing 🕮)
History of the ALTERNATOR Block..... 508

Starter

Introduction

The starter is a battery-driven DC motor for gearing up an engine to speeds at which it has to be cranked.

Description

As the engine cranks and runs up to speed, it spins the shaft faster than the starter does. To prevent this, an overrunning clutch is installed between the pinion and armature shaft. This breaks the connection between them as soon as the engine "overtakes" the starter [Bos02].

The following illustration shows the Simulink representation of the STARTER block.

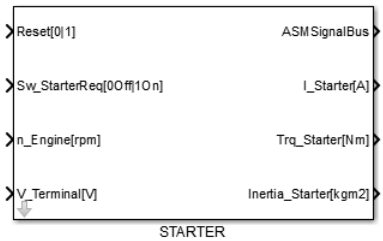

The starter is modeled as a DC motor with permanent magnets. The model consists of an armature circuit. A constant magnetic field induces a voltage in the armature circuit. The model calculates the starter current and torque depending on the terminal voltage, the inner resistance and the inductance of the armature circuit. To match the starter speed to the engine speed, the shafts are connected by a transmission.

A load reference-arrow system is used for the starter. The current flowing into the starter is positive.

The next illustration shows the equivalent circuit diagram of the model.

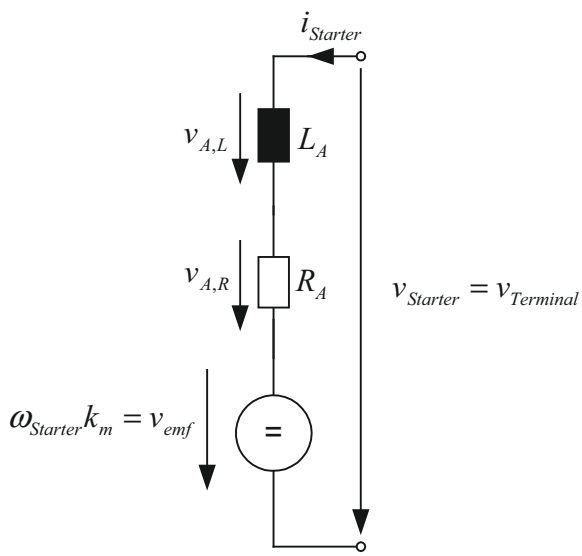

Mode of machine operation:

$v_{emf} = \omega_{Starter}\, k_m$

$Trq_{Starter} = i_{Starter}\, k_m$

Starter:

$$v_{Starter} = R_A\, i_{Starter} + L_A \frac{di_{Starter}}{dt} + v_{emf}$$

where:

$v_{Starter}$	is the starter armature voltage
$i_{Starter}$	is the starter armature current
$\mathrm{Trq}_{Starter}$	is the starter armature torque
R_A	is the armature resistance
L_A	is the armature inductance
$\omega_{Starter}$	is the rotational speed
k_m	is the machine constant

The next illustration shows the control diagram of the starter model.

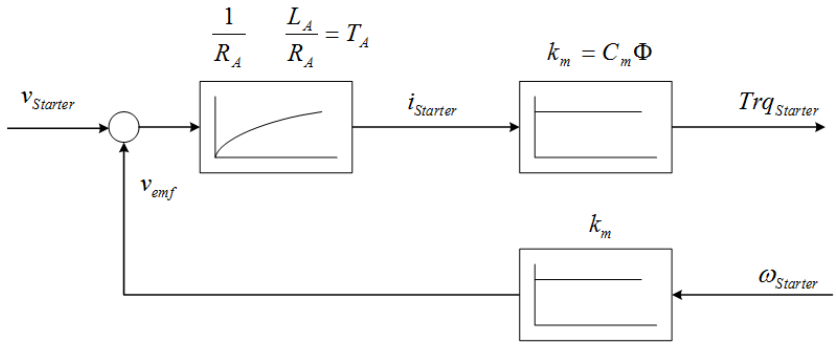

Assuming that the inductance is not used for calculating the starter torque and current, the following relationship between the starter speed and starter torque can be derived.

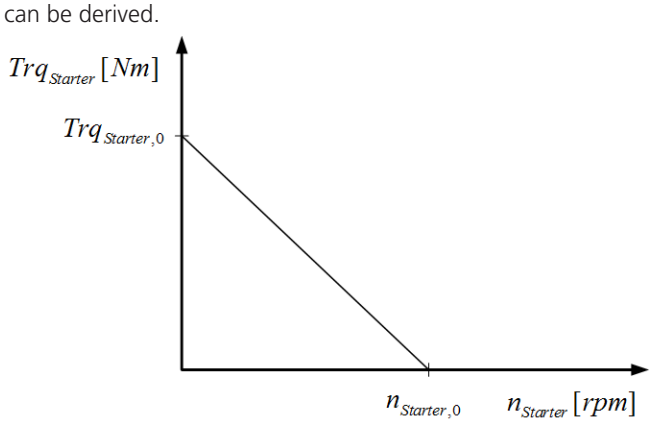

This relation results in the following two equations, which can be used to calculate the starter resistance $R_{Starter}$ and machine constant k_m from the desired maximum starter torque $\mathrm{Trq}_{Starter,0}$ and the maximum starter speed $n_{Starter,0}$.

$$R_{Starter} = \frac{V_{Bat,0}^2}{n_{Starter,0}\, Trq_{Starter,0}}$$

$$k_m = \frac{V_{Bat,0}}{n_{Starter,0}}$$

Note

These equations depend on the nominal battery terminal voltage $V_{Bat,0}$, which is typically around 14 V. For lower terminal voltage levels than to the nominal one, the starter model calculates less torque and less current than for the nominal state.

Inports

The following table shows the inports:

Name	Unit	Description
n_Engine	[rpm]	Engine speed
Reset	[0|1]	Reset
Sw_StarterReq	[0|1]	Switch for starter request: ▪ 0: Starter off ▪ 1: Starter on
V_Terminal	[V]	Terminal voltage

Outports

The following table shows the outports:

Name	Unit	Description
ASMSignalBus	[]	Signal bus that contains signals of ASM components. Refer to ASMSignalBus (ASM User Guide 🕮).
I_Starter	[A]	Current
Inertia_Starter	[kg m^2]	Inertia
Trq_Starter	[Nm]	Torque

Parameter

The following table shows the block parameters:

Name	Unit	Description
Const_Inertia_Starter	[Nm/(rad/s)^2]	Inertia
Const_km_Starter	[]	Machine stator constant
Const_L_Starter	[H]	Armature inductance
Const_PolePairs	[]	Number of pole pairs
Const_R_Starter	[Ω]	Armature resistance
Const_TransmissionRatio	[]	Transmission ratio engine to stator speed
StepSize	[s]	Simulation step size

Related topics

References

History of the STARTER Block..... 535
Starter (ModelDesk Parameterizing 🕮)

Accumulator

Where to go from here

Information in this section

Battery 176
The BATTERY model calculates the terminal voltage, the battery state of charge and the battery temperature as functions of the charge and discharge current.

Battery Multicell 184
The BATTERY_MULTICELL model calculates the terminal voltage, the battery state of charge and the battery temperature as functions of the charge and discharge current.

Parallel Circuit Current Split 195
The PARALLEL_CIRCUIT_CURRENT_SPLIT model observes the voltages of each separate battery and splits the terminal current of the complete parallel circuit to different currents for each battery, so that a voltage adjustment is simulated.

RC Battery 198
The RC_BATTERY block simulates one circuit consisting out of *resistor* and *capacitor* in parallel connection and provides a dynamic loss voltage for the BATTERY_MULTICELL model.

Battery

Description

The BATTERY model calculates the terminal voltage, the battery state of charge and the battery temperature as functions of the charge and discharge current.

The next illustration shows the Simulink representation of the battery.

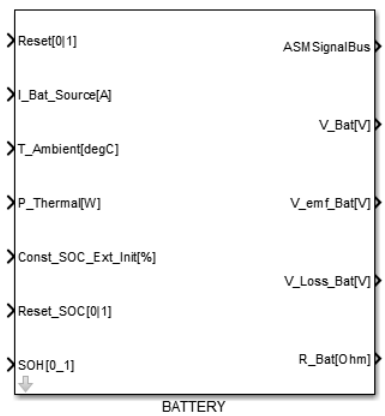

The battery model consists of three submodules [Sie06]:

- Terminal voltage model for calculating the battery terminal voltage
- Thermal model for calculating the battery temperature
- State-of-Charge Model (SOC) for the calculation of battery state of charge

The next three sections describe the different battery submodules:

Terminal voltage model

The terminal voltage model contains different battery effects:

- Voltage of each battery cell according to the state of charge (SOC)
- Inner resistance of the battery
- Inductance of the battery
- Double layer behavior
- Diffusion behavior

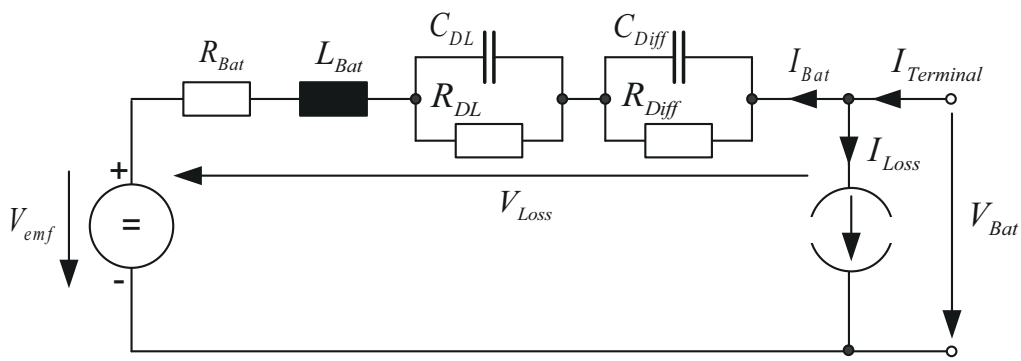

A load reference-arrow system is used for the battery. The charge current is positive and the discharge is negative.

The battery terminal voltage can be calculated with the following equation:

$$V_{Bat} = V_{emf} - V_{Loss}$$

The initial voltage is the sum of the individual cell voltages according to the state of charge:

$$V_{emf} = n_{Cell} V_{Cell}(SOC)$$

With the voltage loss according to the charge and discharge current, the final battery terminal voltage can be calculated:

$$V_{Loss} = \frac{1}{C_{DL}}\int\left(I_{Bat} - \frac{V_{C\,DL}}{R_{DL}}\right)dt + \frac{1}{C_{Diff}}\int\left(I_{Bat} - \frac{V_{C\,Diff}}{R_{Diff}}\right)dt + I_{Bat}R_{Bat}(SOC, I_{Bat}, T_{Bat}, SOH) + \frac{dI_{Bat}}{dt}L_{Bat}$$

where:

V_{Bat}	is the battery terminal voltage
V_{emf}	is the electromotive force voltage (balanced voltage)
V_{Loss}	is the voltage loss
V_{Cell}	is the cell voltage
$V_{C\,DL}$	is the voltage loss double layer capacitance
$V_{C\,Diff}$	is the voltage loss diffusion capacitance
n_{Cell}	is the number of battery cells
C_{DL}	is the double layer capacity
R_{DL}	is the double layer resistance
C_{Diff}	is the diffusion capacitance
R_{Diff}	is the diffusion resistance
R_{Bat}	is the battery resistance
L_{Bat}	is the battery inductance
T_{Bat}	is the battery temperature
I_{Bat}	is the battery current
SOC	is the state of charge

Thermal model

The thermal battery model is based on a balance of the heat generation and the heat loss power:

$$T_{Bat} = T_{Bat,0} + \frac{1}{C_{Th}m_{Bat}}\int P_W dt$$

The heat generation and the heat loss power take the following effects into account:

$$P_W = P_{Joule} + P_{MainReaction} + P_{LossReaction} - P_{Radiation}$$

Heat generation due to internal losses according to the current and the voltage loss:

$$P_{Joule} = I_{Bat}\,V_{Loss}$$

Heat generation according to the chemical battery reaction:

$$P_{MainReaction} = c_{MR}\,I_{Bat}$$

Heat generation according to the loss reaction depending on the gassing behavior:

$$P_{LossReaction} = V_{Bat}\,I_{Loss}$$

with the loss current

$$I_{Loss} = I_0 e\left(\frac{V_{Bat} - V_N}{K_1} + K_2\frac{T_{Bat} - T_N}{T_{Bat}T_N}\right)$$

Heat losses according to the heat flux due to thermal radiation:

$$P_{Radiation} = \varepsilon\, A_{Rad}\, \sigma\left(T_{Bat}^4 - T_{Ambient}^4\right)$$

where:

$T_{Bat,0}$	is the initial battery temperature
C_{Th}	is the thermal capacity, typically 800 J/(Kg K) for valve regulated lead acid, 750 J/(Kg K) for NiMH, and 700 J/(Kg K) for Li-Ion batteries.
m_{Bat}	is the battery mass
P_W	is the heat power
c_{MR}	is the integral thermal emission factor, for example, 68.4 mV for lead acid, -140 mV for NiCd, -50 mV for NiMH and 30 mV for Li-Ion batteries
I_0	is the sum of loss currents at nominal conditions
V_N	is the nominal cell voltage, for example, 2 V for lead acid, 1.2 V for NiCd and NiMH and 3.2 ... 4.0 V for Li-Ion batteries
T_N	is the nominal temperature, by definition 300 K
T_{Bat}	is the cell temperature
$T_{Ambient}$	is the ambient temperature
K_1	is the constant that shows dependence on clamp voltage, for example, 90 mV for lead acid closed
K_2	is the constant that shows dependence on temperature, for example, 6000 K
A_{Rad}	is the radiating surface
σ	is the Stefan-Boltzmann constant, 5.67 * 10^{-8} W/(m^2K^4)
ε	is the emission ratio, for example, 0.7 … 0.9 for usual housing materials

State of charge model

The state of charge is calculated according to the following currents:

- Loss current from the thermal model I_{Loss}
- Battery current charge or discharge current

I_{Bat} - I_{Loss} > 0: Alternator charges the battery

I_{Bat} - I_{Loss} < 0: Load current discharges the battery

$$SOC = SOC_0 + \frac{1}{C_N(T) \cdot SOH} \int (I_{Terminal} - I_{Loss})dt$$

where:

SOC	is the state of charge
SOC_0	is the initial state of charge
C_N	is the nominal capacity of battery
$I_{Terminal}$	is the terminal current
I_{Loss}	is the loss current

Inports

The following table shows the inports:

Name	Unit	Description
Const_SOC_Ext_Init	[%]	Initial state of charge, usage is selected via block parameter Sw_SOC_Init
I_Bat_Source	[A]	Current
P_Thermal	[W]	External thermal power, negative value for cooling, positive value for heating
Reset	[0|1]	Reset
Reset_SOC	[]	Reset state of charge to initial value
SOH	[1_0]	State of health
T_Ambient	[°C]	Ambient temperature

Outports

The following table shows the outports:

Name	Unit	Description
ASMSignalBus	[]	Signal bus that contains signals of ASM components. Refer to ASMSignalBus (ASM User Guide 🕮).
R_Bat	[Ω]	Internal resistance
V_Bat	[V]	Battery voltage
V_emf_bat	[V]	Electromotive force voltage
V_Loss_Bat	[V]	Voltage loss

Parameter

The following table shows the block parameters:

Name	Unit	Description
Const_A_Surface	[m^2]	Relevant surface A_{Rad} for thermal emission
Const_Capacity_nom	[Ah]	Nominal block capacity C_N
Const_Capacity_Thermal	[J/kg K]	Thermal capacity C_{Th}
Const_C_diff_Charge	[F]	Diffusion capacitance charging C_{Diff} of one cell
Const_C_diff_Discharge	[F]	Diffusion capacitance discharging C_{Diff} of one cell
Const_Cd_Charge	[F]	Double layer capacitance charging C_{DL} of one cell
Const_Cd_Discharge	[F]	Double layer capacitance discharging C_{DL}
Const_Factor_ThermalEmission	[]	Integral thermal emission factor ε, for example, 0.7…0.9 for usual housing materials
Const_I_Loss_nom	[A]	Sum of loss currents I_0 at nominal temperature and voltage
Const_K1	[V]	Differential voltage loss coefficient K1
Const_K2	[K]	Differential thermal loss coefficient K2
Const_L_Charge	[H]	Battery inductance charging L_{Bat} of one cell
Const_L_Discharge	[H]	Battery inductance discharging L_{Bat}

Name	Unit	Description
Const_m_Batt	[kg]	Battery mass m_{Bat}
Const_n_Cells	[]	Number of cells n_{Cell}
Const_R_diff_Charge	[Ω]	Diffusion resistance charging R_{Diff} of one cell
Const_R_diff_Discharge	[Ω]	Diffusion resistance discharging R_{Diff} of one cell
Const_Rd_Charge	[Ω]	Double layer resistance charging R_{DL} of one cell
Const_Rd_Discharge	[Ω]	Double layer resistance discharging R_{DL}
Const_SOC_Init	[%]	Initial state of charge SOC_0
Const_Temp_nom	[K]	Base temperature T_N for nominal values
Const_V_Cell_nom	[V]	Nominal cell voltage V_N, for example, 2 V for lead acid, 1.2 V for NiCd and NiMH and 3.2 ... 4.0 V for Li-Ion batteries
Const_c_MainReaction	[]	Thermal coefficient (battery constant C_{MR}) by main chemical reaction, for example, 68.4 mV for lead acid, -140 mV for NiCd, -50 mV for NiMH and 30 mV for Li-Ion batteries
Map_Factor_Capacity	[]	Battery capacity factor = f(temperature[°C])
Map_Factor_Capacity_SOH	[]	Block capacity SOH factor = f(SOH[0_1]). This factor multiplied with the nominal capacitance results in the actual battery capacitance.
Map_Factor_CellVoltage	[]	Cell voltage factor = f(state of charge[%]) This factor multiplied with the nominal cell voltage supply the resulting cell voltage.
Map_R_Charge	[Ω]	Battery charging resistance R_{Bat} of one cell = f(SOC [%], temperature [°C])
Map_R_Discharge	[Ω]	Battery discharging resistance R_{Bat} of one cell = f(SOC [%], temperature [°C])
Map_R_Factor_Charge	[]	Battery resistance factor charging = f(current[A])
Map_R_Factor_Discharge	[]	Battery resistance factor discharging = f(current[A])
Map_R_Factor_SOH_Charging	[]	Battery resistance factor charging=f(SOH[0_1]). This factor multiplied with the resistance from **Map_R_Charge** results in the actual internal resistance.
Map_R_Factor_SOH_Discharging	[]	Battery resistance factor discharging=f(SOH[0_1]). This factor multiplied with the resistance from **Map_R_Disharge** results in the actual internal resistance.
StepSize	[s]	Simulation step size
Sw_Diffusion	[0|1]	Switch for diffusion simulation: ▪ 0: Disable ▪ 1: Enable
Sw_DoubleLayer	[0|1]	Switch for double layer simulation: ▪ 0: Disable ▪ 1: Enable
Sw_I_Loss	[0|1]	Switch for loss current simulation: ▪ 0: Disable

Name	Unit	Description
		▪ 1: Enable
Sw_Inductance	[0|1]	Switch for inductance simulation: ▪ 0: Disable ▪ 1: Enable
Sw_SOC_Init	[0|1]	Switch to define which initial SOC value is used ▪ 0: Internal value defined by block parameter ▪ 1: External value via block inport

Processing information

You have to parameterize the parameter values for the different resistances, the inductance, and capacitances for one battery cell. If these values are only available for the complete battery pack, you have to calculate the cell values. To do this, you can divide the battery pack resistance and inductance values by the number of cells. For the dynamic diffusion and double layer behavior, do not change the time constant of the RC parallel circuit. To achieve this, you have to multiply the capacitance values with the **Number of cell** parameter.

For a basic battery parameterization, the important parameters are the battery capacitance and the cell voltage that depend on the SOC. For the internal resistance, you can use a constant value without SOC, temperature, and current dependence. You can neglect the inductance for Li-ion batteries. Therefore, you can use the switch for inductance simulation to disable the induction simulation.

The model simulates the dynamic voltage drop behavior, such as the double layer and diffusion effects with two RC circuits. For a basic parametrization, you can disable these effects with the switch of the double layer and diffusion behavior.

For a simple dynamic voltage drop simulation, you can use only one RC circuit and disable the other via the switch. You can identify the time constant τ of the used RC circuit, and therefore the parameters for the resistance and capacitance, via a battery voltage measurement. For this measurement, you apply a current pulse to the battery and evaluate the battery voltage response. You can determine the time constant, and therefore the value of the resistance and capacitance, as shown in the following graphic:

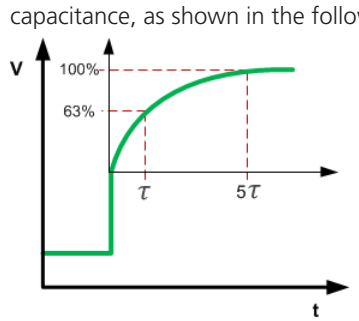

Where: $\tau = R \cdot C$

If the model simulates a detailed dynamic voltage drop with double layer (low time constant) and diffusion behavior (higher time constant), you can use an electro-chemical impedance spectroscopy (EIS) measurement to parameterize the model. The measurement points the complex impedance of the battery in the

frequency response locus (Nyquist Plot). The following equation displays the complex impedance of the battery:

$$\underline{Z} = Re\{\underline{Z}\} + j\, Im\{\underline{Z}\} = |\underline{Z}|e^{j\,\varphi(\underline{Z})}$$

To find the resistance and capacitance values of the two RC circuits, you can use an optimization routine that verifies the RC values to get an match between simulation result and measurement. The following graphic shows an example of an EIS measurement:

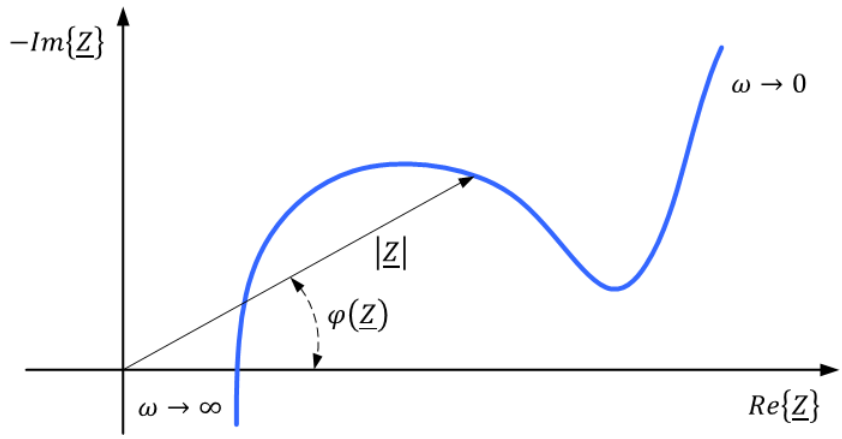

The following example parameterizations for different battery types are available:

- Lead-acid battery
- Nickel-metal hydride battery
- Lithium-ion battery

Lead-acid battery

- LeadAcid_AGM_89Ah: This absorbed glass (AGM) battery is a class of a valve-regulated lead-acid (VRLA) battery with a capacity of 89 Ah and an open-circuit voltage of 2.0 V. This technology represents a low-maintenance rechargeable battery with high power density and low internal resistance.

Nickel-metal hydride battery

- NiMH_0p8Ah: This parameterization represents a rechargeable nickel-metal hydride (NiMH) consumer battery with a capacity of 800 mAh and an open-circuit voltage of 1.2 V.
- NiMH_6p5Ah: This parameterization represents a rechargeable nickel-metal hydride (NiMH) battery with a capacity of 6.5 Ah and an open-circuit voltage of 1.2 V. This type of battery is often used in hybrid vehicle applications.

Lithium-ion battery

- LiIon_NMC_Polimer_HE_53Ah: This parameterization represents a high energy lithium-ion NMC polymer battery. The battery cell is based on lithium nickel manganese cobalt (NMC) cathodes and a graphite-based anode. It has a capacity of 53 Ah and an open-circuit voltage of 3.7 V. This type of battery is often used in hybrid and pure electric vehicle applications.

- LiIon_NMC_Polimer_HP_5Ah: This parameterization represents a high power lithium-ion NMC polymer battery. The battery cell is based on lithium nickel manganese cobalt (NMC) cathodes and a graphite-based anode. It has a capacity of 5 Ah and an open-circuit voltage of 3.65 V.
- LiIon_LFP_15Ah: This parameterization represents a lithium-iron-phosphate (LFP) battery cell with a capacity of 15 Ah and an open-circuit voltage of 3.3 V.
- LiIon_LTO_1Ah: This parameterization represents a lithium-titanate (LTO) battery with a capacity of 1 Ah and an open-circuit voltage of 2.52 V. This type of lithium-ion battery has an excellent life cycle and great safety characteristics but a lower specific energy and voltage than conventional lithium-ion batteries. LTO batteries are used in automotive electric applications.

Related topics

References

Battery (ModelDesk Parameterizing 🕮)
History of the BATTERY Block 509

Battery Multicell

Description

The BATTERY_MULTICELL model calculates the terminal voltage, the battery state of charge and the battery temperature of each cell as functions of the charge and discharge current.

The following illustration shows the Simulink representation of the battery multicell.

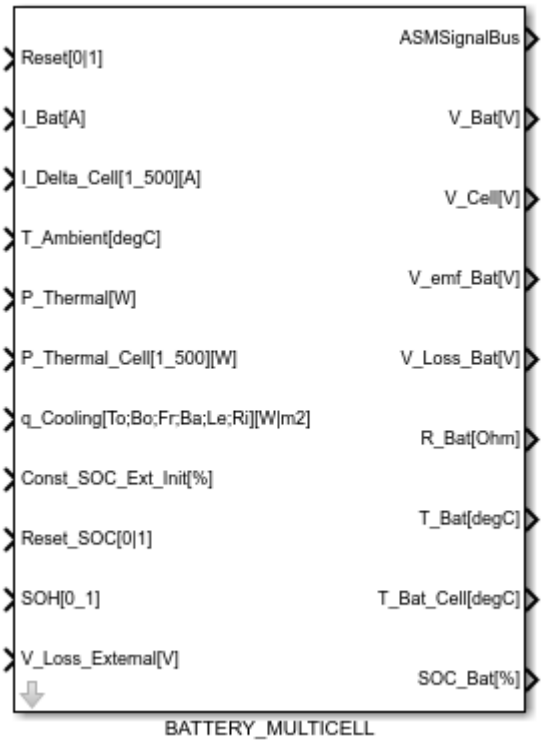

The battery multicell model consists of three submodules [Sie06]:

- Terminal voltage model for calculating the battery terminal voltage
- Thermal model for calculating the battery temperature of each separate cell
- State-of-Charge Model (SOC) for the calculation of battery state of charge

The next three sections describe the different battery submodules:

Terminal voltage model

The terminal voltage model contains different battery effects:

- Voltage of each battery cell according to the state of charge (SOC)
- Inner resistance of the battery
- Inductance of the battery
- Double layer behavior
- Diffusion behavior

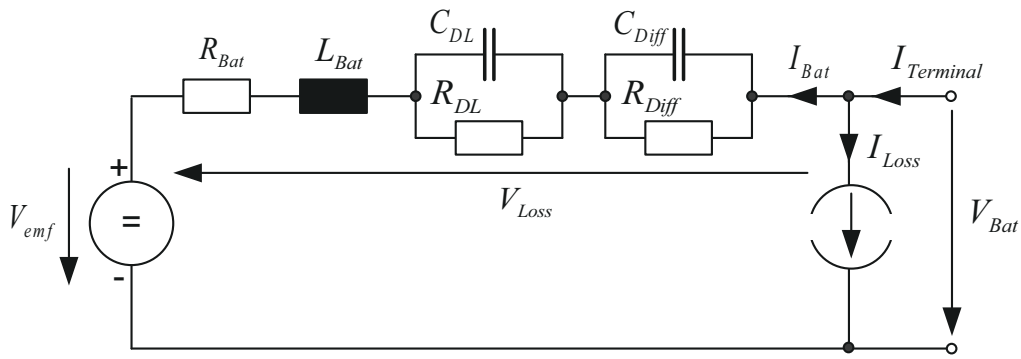

A load reference-arrow system is used for the battery. The charge current is positive and the discharge is negative.

The battery terminal voltage can be calculated with the following equation:

$$V_{\text{Bat}} = V_{\text{emf}} - V_{\text{Loss}}$$

The initial voltage is the sum of the individual cell voltages according to the state of charge:

$$V_{emf} = n_{Cell} V_{Cell}(SOC)$$

With the voltage loss according to the charge and discharge current, the final battery terminal voltage can be calculated:

$$V_{\text{Loss}} = \frac{1}{C_{DL}} \int \left(I_{Bat} - \frac{V_{C\,DL}}{R_{DL}} \right) dt + \frac{1}{C_{Diff}} \int \left(I_{Bat} - \frac{V_{C\,Diff}}{R_{Diff}} \right) dt + I_{Bat} R_{Bat}(SOC, I_{Bat}, T_{Bat}, SOH) + \frac{dI_{Bat}}{dt} L_{Bat}$$

where:

V_{Bat}	is the battery terminal voltage
V_{emf}	is the electromotive force voltage (balanced voltage)
V_{Loss}	is the voltage loss
V_{Cell}	is the cell voltage
$V_{C\,DL}$	is the voltage loss double layer capacitance
$V_{C\,Diff}$	is the voltage loss diffusion capacitance
n_{Cell}	is the number of battery cells
C_{DL}	is the double layer capacity
R_{DL}	is the double layer resistance
C_{Diff}	is the diffusion capacitance
R_{Diff}	is the diffusion resistance
R_{Bat}	is the battery resistance
L_{Bat}	is the battery inductance
T_{Bat}	is the battery temperature
I_{Bat}	is the battery current
SOC	is the state of charge

Thermal model

The thermal battery model simulates the temperature for each separate cell and the interaction with neighbor cells.

The thermal effects that are considered are:

- Heat generation due to internal losses according to the current and the voltage loss
- Heat generation according to the chemical battery reaction
- Heat transfer between cells based on heat conduction
- Heat generation according to the loss reaction, e.g. gassing effects
- Heat losses according to the heat flux due to thermal radiation
- Heat losses caused by the cooling system
- External user-defined heat generation or loss for each cell

The illustration shows the battery topology which is defined by a number of cells that are placed in the x-direction and a number of cells placed in the y-direction. The cells are connected in series. The line on top shows the current flow and therefore the electrical connection. The index number (Idx) describes at which vector index the cell values are placed in the parameter and simulation signal vectors.

The cell geometry is defined via dimension values in x-, y- and z-direction.

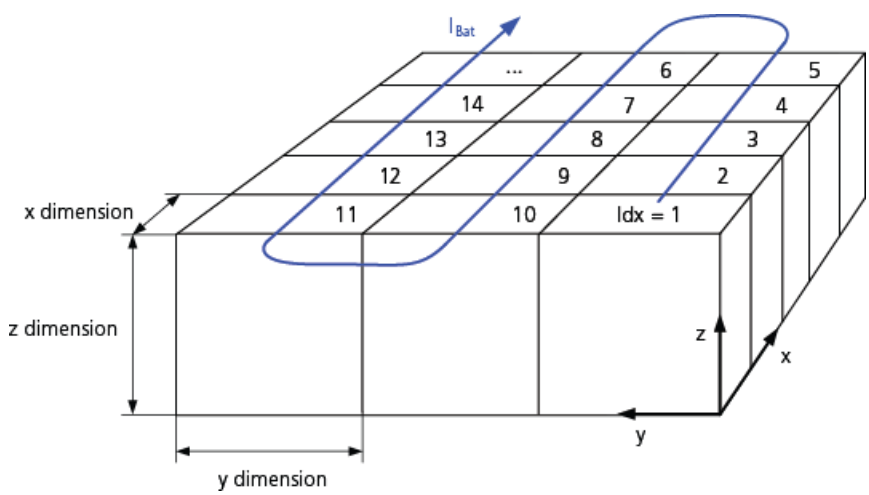

The model is based on a balance of the heat generation and the heat loss power that is simulated for each cell:

$$T_{Cell} = T_{Cell,0} + \frac{1}{C_{Th} m_{Cell}} \int P_W dt$$

The heat generation and the heat loss power take the following effects into account:

$$P_W = P_{Joule} + P_{MainReaction} + P_{Transfer} + P_{LossReaction} - P_{Radiation} - P_{Cooling} + P_{Extern}$$

Heat generation due to internal losses according to the current and the voltage loss:

$$P_{Joule} = I_{Bat}\, V_{Loss}$$

Heat generation according to the chemical battery reaction, where the factor c_{MR} depends on the battery technology:

$$P_{MainReaction} = c_{MR}\, I_{Bat}$$

Heat generation or heat losses that is caused by thermal power transfer between neighboring cells. This thermal conduction is described by Fourier's law:

$$P_{Transfer} = A_{Transfer}\, \lambda\, \frac{T_{Cell\,1} - T_{Cell\,2}}{d}$$

Heat generation according to the loss reaction e.g. the gassing behavior:

$$P_{LossReaction} = V_{Bat}\, I_{Loss}$$

with the loss current

$$I_{Loss} = I_0\, e\left(\frac{V_{Bat} - V_N}{K_1} + K_2 \frac{T_{Bat} - T_N}{T_{Bat} T_N}\right)$$

Heat losses according to the heat flux due to thermal radiation. Where the thermal radiation is only active for marginal cell areas that have contact to the ambient temperature.

$$P_{Radiation} = \varepsilon\, A_{Rad}\, \sigma\left(T_{Bat}^4 - T_{Ambient}^4\right)$$

A cooling plate can be simulated for the six battery pack surfaces at the top, bottom, front, back, left and right. For these cooling areas a heat flux density (heat rate per unit area) can be set via a battery model inport. Depending on this setting, an additional cooling power is set for the corresponding cells. The thermal radiation effect for the cooled surfaces is disabled.

$$P_{Cooling} = q\, A_{Cooling}$$

The following illustration shows how the cooling plate positions are defined.

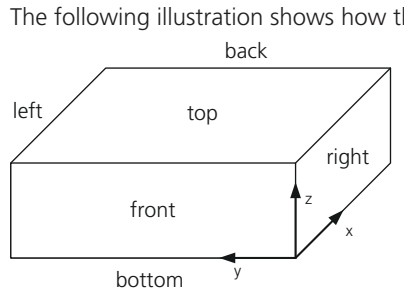

where:

$T_{Cell,0}$	is the initial battery temperature
C_{Th}	is the thermal capacity, typically 800 J/(Kg K) for valve regulated lead acid, 750 J/(Kg K) for NiMH, and 700 J/(Kg K) for Li-Ion batteries
m_{Cell}	is the battery cell mass
P_W	is the heat power
c_{MR}	is the thermal coefficient that describes the thermal behavior of the main chemical reaction, for example, 68.4 mV for lead acid,

	140 mV for NiCd, -50 mV for NiMH, and 30 mV for Li-Ion batteries
I_0	is the sum of loss currents at nominal conditions
V_N	is the nominal cell voltage, for example, 2 V for lead acid, 1.2 V for NiCd, and NiMH and 3.2 ... 4.0 V for Li-Ion batteries
T_N	is the nominal temperature, per definition 300 K
T_{Cell}	is the cell temperature
$T_{Cell\,1}$, $T_{Cell\,2}$	is the cell temperature of two neighbor cells
$T_{Ambient}$	is the ambient temperature
K_1	is the constant that shows dependence on clamp voltage e.g. 90mV for lead acid closed
K_2	is the constant that shows dependence on temperature e.g. 6000 K
A_{Rad}	is the radiating surface
$A_{Transfer}$	is the contact area between two cells
$A_{Cooling}$	is the cooling area
q	is the heat flux density
σ	is the Stefan-Boltzmann constant, 5.67 * 10^{-8} W/(m^2K^4)
ε	is the integral thermal emission factor, for example 0.7 ... 0.9 for usual housing materials
λ	is the thermal conductivity
d	is the cell dimension

If only the mean temperature of the complete battery pack is needed, the thermal simulation of each cell can be disabled via the thermal mode parameter Sw_Thermal. If the thermal simulation of each cell is disabled, the cooling plate simulation is not available.

State of charge model

The state of charge is calculated according to the following currents:

- Loss current from the thermal model I_{Loss}
- Battery current charge or discharge current

$I_{\mathrm{Bat}} - I_{\mathrm{Loss}} > 0$: Alternator charges the battery

$I_{\mathrm{Bat}} - I_{\mathrm{Loss}} < 0$: Load current discharges the battery

$$SOC = SOC_0 + \frac{1}{C_N(T) \cdot SOH} \int (I_{Terminal} - I_{Loss})\, dt$$

where:

SOC	is the state of charge
SOC_0	is the initial state of charge
C_N	is the nominal capacity of battery
I_{Terminal}	is the terminal current
I_{Loss}	is the loss current

Multicell model

The battery multicell model supports the serial connection of maximum 500 battery cells and calculates the voltage of each separate cell. It simulates one

battery reference cell in detail, which is representative for all cells in the battery, and one system that calculates the voltage difference between the reference cell and each separate cell.

Different voltages of the cells can result from differences in the state of charge, the inner resistance or from an additional charge or discharge current for each cell, for example, from a battery management system. The voltage difference of the cell to the battery reference voltage is calculated as follows:

$$\Delta V_{Cell} = \Delta V_{SOC}(SOC) + \Delta V_{\Delta R}(\Delta R_{Cell}) + \Delta V_{I}(I_{Cell,ext})$$

where:

ΔV_{Cell}	is the voltage difference to the battery reference voltage
$\Delta V_{SOC}(SOC)$	is the voltage difference depending on the SOC of the cell
$\Delta V_{\Delta R}(\Delta R_{Cell})$	is the voltage difference depending on the resistance difference of the cell
$\Delta V_{I}(I_{Cell,ext})$	is the voltage difference depending on an additional external cell current (balancing current)

Inports

The following table shows the inports:

Name	Unit	Description
Const_SOC_Ext_Init	[%]	Initial state of charge, usage is selected via Sw_SOC_Init block parameter
I_Bat	[A]	Current
I_Delta_Cell	[A]	Vector of additional external cell current, for example the balancing current, from a battery management system. Vector size must be 500 (maximum number of cells)
P_Thermal	[W]	External thermal power, negative value for cooling, positive value for heating; The inport is used only if the thermal mode (Sw_Thermal) is set to 0 (battery mean temperature simulation). Otherwise, the P_Thermal_Cell inport is used.
P_Thermal_Cell	[W]	Vector with additional thermal power for each cell. Negative value for cooling, positive value for heating. See above for the mapping of the vector index to the geometrical position of the cell.
q_Cooling	[W/m^2]	Vector with heat flux density for each battery pack cooling plate. If the value is set to zero, cooling for this area is disabled. See above for the definition of the cooling plate positions.
Reset	[0|1]	Reset
Reset_SOC	[]	Reset state of charge to initial value
SOH	[1_0]	State of health
T_Ambient	[°C]	Ambient temperature
V_Loss_External	[V]	Additional loss voltage

Outports

The following table shows the outports:

Name	Unit	Description
ASMSignalBus	[]	Signal bus that contains signals of ASM components. Refer to ASMSignalBus (ASM User Guide 🕮).
R_Bat	[Ω]	Internal resistance
SOC_Bat	[%]	Battery state of charge
T_Bat	[°C]	Battery mean temperature: sum of all cell temperatures divided by number of cells
T_Bat_Cell	[°C]	Vector with the temperature of each separate cell. See above for the mapping of the vector index to the geometrical position of the cell.
V_Bat	[V]	Battery voltage
V_Cell	[V]	Vector with voltage of each separate cell
V_emf_Bat	[V]	Electromotive force voltage
V_Loss_Bat	[V]	Voltage loss

Parameters

The following table shows the block parameters:

Name	Unit	Description
Const_A_Surface	[m^2]	Relevant surface A_{Rad} for thermal emission. This parameter is only used if the thermal mode (Sw_Thermal) is set to 0 (battery mean temperature simulation). Otherwise, the surface is calculated from the cell dimension and battery topology.
Const_C_diff_Charge	[F]	Diffusion capacitance charging C_{Diff} of one cell (reference cell)
Const_C_diff_Discharge	[F]	Diffusion capacitance discharging C_{Diff} of one cell (reference cell)
Const_c_MainReaction	[]	Thermal coefficient (battery constant c_{MR}) by main chemical reaction, for example, 68.4 mV for lead acid, -140 mV for NiCd, -50 mV for NiMH and 30 mV for Li-Ion batteries
Const_Capacity_Delta_Multicell	[Ah]	Vector with capacity difference to reference cell for each cell
Const_Capacity_nom	[Ah]	Nominal block capacity C_N *of reference cell*
Const_Capacity_Thermal	[J/kg K]	Thermal capacity c_{Th}
Const_Cd_Charge	[F]	Double layer capacitance charging C_{DL} of one cell (of reference cell)
Const_Cd_Discharge	[F]	Double layer capacitance discharging C_{DL} (reference cell)
Const_Conductivity	[W/(m K)]	Thermal cell conductivity
Const_Dimension_Cell	[m]	Vector with cell dimension in x-,y- and z-direction. See above for the definition of the x-, y- and z-directions.
Const_Factor_ThermalEmission	[]	Integral thermal emission factor ε, for example, 0.7 … 0.9 for usual housing materials
Const_I_Loss_nom	[A]	Sum of loss currents I_0 at nominal temperature and voltage
Const_L_Charge	[H]	Battery inductance charging L_{Bat} of one cell (reference cell)
Const_L_Discharge	[H]	Battery inductance discharging L_{Bat} of one cell (reference cell)
Const_K1	[V]	Differential voltage loss coefficient K1

Name	Unit	Description
Const_K2	[K]	Differential thermal loss coefficient K2
Const_m_Batt	[kg]	Battery mass m_{Bat}
Const_n_x_Cells	[]	Number of cells in x-direction
Const_n_y_Cells	[]	Number of cells in y-direction
Const_R_Delta_Multicell	[Ω]	Vector with resistance difference ΔR_{Cell} from reference cell for each cell
Const_R_diff_Charge	[Ω]	Diffusion resistance charging R_{Diff} of one cell (reference cell)
Const_R_diff_Discharge	[Ω]	Diffusion resistance discharging R_{Diff} of one cell (reference cell)
Const_Rd_Charge	[Ω]	Double layer resistance charging R_{DL} of one cell (reference cell)
Const_Rd_Discharge	[Ω]	Double layer resistance discharging R_{DL}(reference cell)
Const_SOC_Init	[%]	Initial state of charge (reference cell)
Const_StateOfCharge_Init_Multicell	[%]	Vector with initial state of charge for each cell (relative value to initial SOC of reference cell)
Const_Temp_nom	[K]	Base temperature T_N for nominal values
Const_T_Init	[°C]	Initial cell temperature
Const_T_Init_Delta_Multicell	[°C]	Vector with the initial temperature difference to the initial cell temperature for each separate cell. See above for the mapping of the vector index to the geometrical position of the cell.
Const_V_Cell_nom	[V]	Nominal cell voltage V_N of reference cell, for example, 2 V for lead acid, 1.2 V for NiCd and NiMH and 3.2 ... 4.0 V for Li-Ion batteries
Map_Factor_Capacity	[]	Battery capacity factor = f(temperature[°C])
Map_Factor_Capacity_SOH	[0_1]	Block capacity SOH factor = f(SOH[0_1]); This factor multiplied with the nominal capacitance results in the actual battery capacitance.
Map_Factor_CellVoltage	[]	Cell voltage factor = f(state of charge[%]) This factor multiplied with the nominal cell voltage supply the resulting cell voltage.
Map_R_Charge	[Ω]	Battery charging resistance R_{Bat} of one cell = f(SOC [%], temperature [°C]) (reference cell)
Map_R_Discharge	[Ω]	Battery discharging resistance R_{Bat} of one cell = f(SOC [%], temperature [°C]) (reference cell)
Map_R_Factor_Charge	[]	Battery resistance factor charging = f(current[A]) (reference cell); This factor multiplied with the resistance from Map_R_Charge results in the actual internal resistance.
Map_R_Factor_Discharge	[]	Battery resistance factor discharging = f(current[A]) (reference cell); This factor multiplied with the resistance from Map_R_Discharge results in the actual internal resistance.
Map_R_Factor_SOH_Charging	[]	Battery resistance factor charging=f(SOH[0_1])); This factor multiplied with the resistance from Map_R_Discharge results in the actual internal resistance.
Map_R_Factor_SOH_Discharging	[]	Battery resistance factor discharging=f(SOH[0_1])); This factor multiplied with the resistance from Map_R_Discharge results in the actual internal resistance.

Name	Unit	Description
StepSize	[s]	Simulation step size
Sw_Diffusion	[0|1]	Switch for diffusion simulation: ▪ 0: Disable ▪ 1: Enable
Sw_DoubleLayer	[0|1]	Switch for double layer simulation: ▪ 0: Disable ▪ 1: Enable
Sw_I_Loss	[0|1]	Switch for loss current simulation: ▪ 0: Disable ▪ 1: Enable
Sw_Inductance	[0|1]	Switch for inductance simulation: ▪ 0: Disable ▪ 1: Enable
Sw_SOC_Init	[0|1]	Switch to define which initial SOC value is used ▪ 0: Internal value defined by a block parameter ▪ 1: External value via a block inport
Sw_Thermal	[0|1]	Switch for thermal mode ▪ 0: Only one battery mean temperature is simulated. ▪ 1: The temperature is simulated for each separate cell.

Processing information

You have to parameterize the parameter values for the different resistances, the inductance, and capacitances for one battery cell. If these values are only available for the complete battery pack, you have to calculate the cell values. To do this, you can divide the battery pack resistance and inductance values by the number of cells. For the dynamic diffusion and double layer behavior, do not change the time constant of the RC parallel circuit. To achieve this, you have to multiply the capacitance values with the **Number of cell** parameter.

For a basic battery parameterization, the important parameters are the battery capacitance and the cell voltage that depend on the SOC. For the internal resistance, you can use a constant value without SOC, temperature, and current dependence. You can neglect the inductance for Li-ion batteries. Therefore, you can use the switch for inductance simulation to disable the induction simulation.

The model simulates the dynamic voltage drop behavior, such as the double layer and diffusion effects with two RC circuits. For a basic parametrization, you can disable these effects with the switch of the double layer and diffusion behavior.

For a simple dynamic voltage drop simulation, you can use only one RC circuit and disable the other via the switch. You can identify the time constant τ of the used RC circuit, and therefore the parameters for the resistance and capacitance, via a battery voltage measurement. For this measurement, you apply a current pulse to the battery and evaluate the battery voltage response. You can determine the time constant, and therefore the value of the resistance and capacitance, as shown in the following graphic:

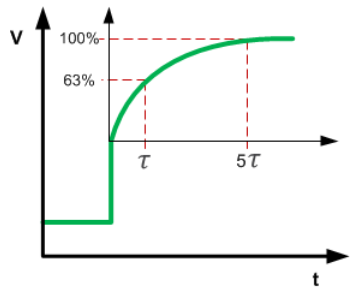

Where: $\tau = R \cdot C$

If the model simulates a detailed dynamic voltage drop with double layer (low time constant) and diffusion behavior (higher time constant), you can use an electro-chemical impedance spectroscopy (EIS) measurement to parameterize the model. The measurement points the complex impedance of the battery in the frequency response locus (Nyquist Plot). The following equation displays the complex impedance of the battery:

$$\underline{Z} = Re\{\underline{Z}\} + j\, Im\{\underline{Z}\} = |\underline{Z}|e^{j\,\varphi(\underline{Z})}$$

To find the resistance and capacitance values of the two RC circuits, you can use an optimization routine that verifies the RC values to get an match between simulation result and measurement. The following graphic shows an example of an EIS measurement:

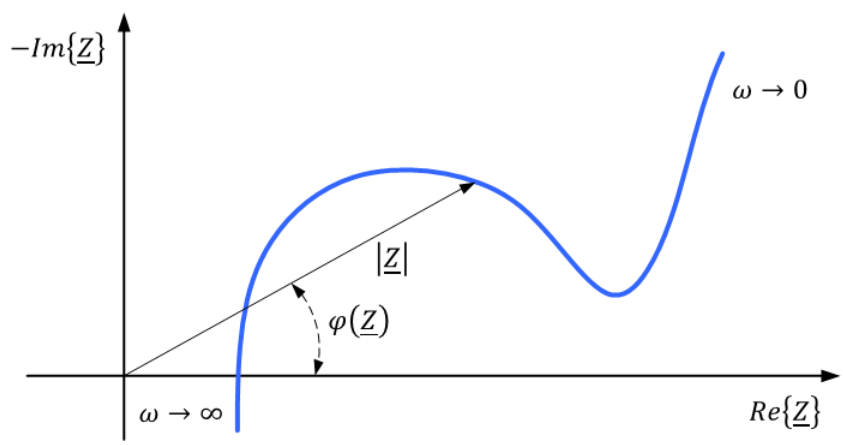

The following example parameterizations for different battery types are available:

- Lead-acid battery
- Nickel-metal hydride battery
- Lithium-ion battery

Lead-acid battery

- LeadAcid_AGM_89Ah: This absorbed glass (AGM) battery is a class of a valve-regulated lead-acid (VRLA) battery with a capacity of 89 Ah and an open-circuit voltage of 2.0 V. This technology represents a low-maintenance rechargeable battery with high power density and low internal resistance.

Nickel-metal hydride battery

- NiMH_0p8Ah: This parameterization represents a rechargeable nickel-metal hydride (NiMH) consumer battery with a capacity of 800 mAh and an open-circuit voltage of 1.2 V.
- NiMH_6p5Ah: This parameterization represents a rechargeable nickel-metal hydride (NiMH) battery with a capacity of 6.5 Ah and an open-circuit voltage of 1.2 V. This type of battery is often used in hybrid vehicle applications.

Lithium-ion battery

- LiIon_NMC_Polimer_HE_53Ah: This parameterization represents a high energy lithium-ion NMC polymer battery. The battery cell is based on lithium nickel manganese cobalt (NMC) cathodes and a graphite-based anode. It has a capacity of 53 Ah and an open-circuit voltage of 3.7 V. This type of battery is often used in hybrid and pure electric vehicle applications.
- LiIon_NMC_Polimer_HP_5Ah: This parameterization represents a high power lithium-ion NMC polymer battery. The battery cell is based on lithium nickel manganese cobalt (NMC) cathodes and a graphite-based anode. It has a capacity of 5 Ah and an open-circuit voltage of 3.65 V.
- LiIon_LFP_15Ah: This parameterization represents a lithium-iron-phosphate (LFP) battery cell with a capacity of 15 Ah and an open-circuit voltage of 3.3 V.
- LiIon_LTO_1Ah: This parameterization represents a lithium-titanate (LTO) battery with a capacity of 1 Ah and an open-circuit voltage of 2.52 V. This type of lithium-ion battery has an excellent life cycle and great safety characteristics but a lower specific energy and voltage than conventional lithium-ion batteries. LTO batteries are used in automotive electric applications.

Related topics

References

Battery Multicell (ModelDesk Parameterizing 🕮)
History of the BATTERY_MULTICELL Block..... 513

Parallel Circuit Current Split

Description

When batteries are connected in a parallel circuit, each separate battery voltage must have the same value. Therefore it is necessary to calculate the current of each separate battery that a balanced voltage of the complete circuit is simulating.

The PARALLEL_CIRCUIT_CURRENT_SPLIT model observes the voltages of each separate battery and splits the terminal current of the complete parallel circuit into different currents for each battery, in order to simulate a voltage adjustment.

The current of the separate battery is calculated from the terminal voltage of the complete parallel circuit and the electromotive force and voltage loss of each battery.

$$I_{Split} = \frac{V_{emf} - V_{Terminal}}{R}$$

where:

I_{Split}	is the current of the separate battery
V_{emf}	is the electromotive force voltage of the separate battery
V_{Terminal}	is the terminal voltage of the complete parallel circuit
R	is the internal resistance of the separate battery

To identify the terminal voltage of the parallel circuit, an equivalent circuit, calculated with *Thévenin's theorem*, is necessary.

Thévenin's theorem Any linear electrical network with voltage and current sources and resistances can be replaced at its terminals by an equivalent voltage source (Thévenin voltage) in series connection with an equivalent resistance (Thévenin resistance).

To calculate the equivalent circuit, the resistance and voltage are needed, so two equations are required.

These two equations are obtained by using the following steps:

1. Calculate the output voltage, when in open circuit condition (no load resistor — meaning infinite resistance). This is Thévenin voltage.
2. Replace voltage sources with short circuits, and current sources with open circuits. Calculate the resistance between terminals. This is Thévenin resistance.

The Thévenin equivalent voltage is the voltage at the output terminals of the original circuit.

For the parallel circuit of N batteries the Thévenin voltage and Thévenin resistance are calculated as follows:

$$V_{Th} = \frac{\Sigma_1^N \frac{V_{emf,N}}{R_N}}{\Sigma_1^N \frac{1}{R_N}}$$

$$R_{Th} = \frac{1}{\sum_1^N \frac{1}{R_N}}$$

where:

V_{Th}	is the Thévenin voltage
R_{Th}	is the Thévenin resistance
$V_{emf,N}$	is the electromotive force voltage of the separate battery
R_N	is the internal resistance of the separate battery
N	is the number of parallel batteries

The following illustration shows the Simulink representation of the Parallel Circuit Current Split.

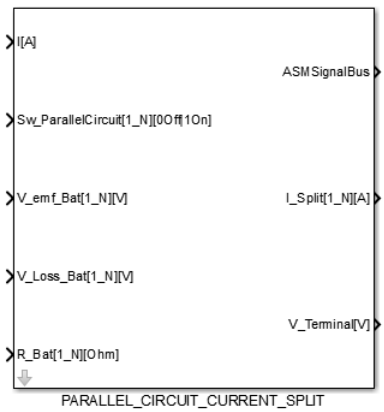

Inports

Name	Unit	Description
I	[A]	Terminal current of the complete parallel circuit.
R_Bat	[Ω]	Internal resistance of each battery connected in parallel. The vector size is the number of batteries connected in parallel.
Sw_ParallelCircuit	[0|1]	Enable switch for each separate battery of the parallel circuit. The vector size is the number of batteries connected in parallel.
V_emf_Bat	[V]	Electromotive voltage of each battery connected in parallel. The vector size is the number of batteries connected in parallel.
V_Loss_Bat	[V]	Voltage loss of each battery connected in parallel. Vector size is the number of batteries connected in parallel.

Outports

Name	Unit	Description
ASMSignalBus	[]	Signal bus that contains signals of ASM components. Refer to ASMSignalBus (ASM User Guide 🕮).
I_Split	[A]	Current of each separate battery connected in parallel. Vector size is the number of batteries connected in parallel.
V_Terminal	[V]	Terminal voltage of complete parallel circuit

RC Battery

Description

The battery-equivalent circuit includes a number of RC circuits to simulate the dynamic voltage drop effects of a battery.

The following illustration shows a typical battery-equivalent circuit.

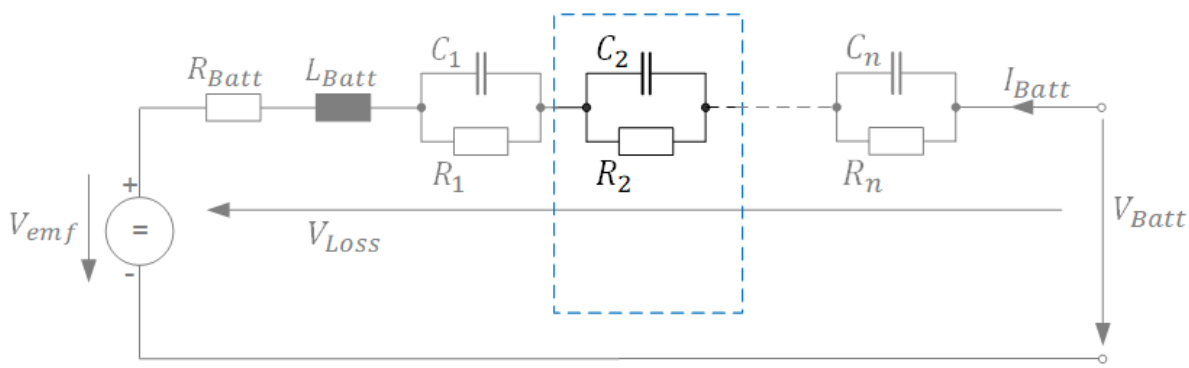

The RC_BATTERY block simulates one circuit consisting of a *resistor* and *capacitor* in parallel connection and provides a dynamic voltage drop for the BATTERY_MULTICELL model (refer to Battery Multicell on page 184). If required, you can use several of the RC_BATTERY blocks to achieve a higher accuracy in the simulation of the loss voltage.

The resistor and capacitor values of the RC circuit can depend on the battery temperature and state of charge.

The following illustration shows the Simulink representation of the block:

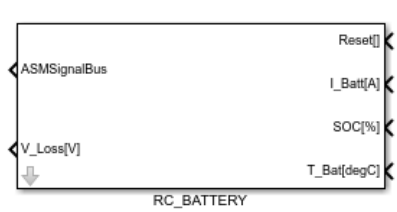

Inports

The following table shows the inports:

Name	Unit	Description
I_Bat	[A]	Battery current
Reset	[0|1]	Reset
SOC	[%]	Battery state of charge
T_Bat	[°C]	Battery temperature

Outports

The following table shows the outports:

Name	Unit	Description
ASMSignalBus	[]	Signal bus that contains signals of ASM components. Refer to ASMSignalBus (ASM User Guide 🕮).
V_Loss	[V]	Loss voltage

Parameters

The following table shows the parameters:

Name	Unit	Description
Map_C	[F]	Capacity = f(SOC[%], T[degC])
Map_R	[Ω]	Resistance = f(SOC[%], T[degC])
StepSize	[s]	Simulation step size
Sw_RC	[0|1]	Enable RC circuit: ▪ 0: Off ▪ 1: On

Related topics

References

Battery Multicell..... 184

Electric Loads

Where to go from here

Information in this section

Overview of the Air Conditioning Subsystem.....201
The **Air conditioning** system consists of electric components (a compressor and fan driven by an electric motor) and thermal interior model components (the refrigerant circuit, the air channel, and the cabin). The system also includes a **Soft ECU Air conditioning** model which regulates the cabin temperature.

Air Channel.....201
The tempered air is pushed through air channels between the heat exchanger of the air conditioning system and the vehicle interior.

Cabin.....204
The cabin model describes the thermal behavior of the vehicle cabin.

Compressor.....208
The compressor makes the refrigerant move through the circuit.

Fan.....211
The fan is responsible for conditioning the air stream.

Light.....213
The light model calculates the current according to the voltage.

Lighting System.....214
The lighting system model calculates the current depending on the voltage for the different automotive lights like the headlight, fog light, brake light and turn signal indicator.

PTC Grid Defroster.....216
The PTC grid defroster model calculates the current and temperature depending on the voltage and the PTC resistance.

PTC Heater.....219
The PTC heater model calculates the current and temperature according to the voltage and the PTC resistance.

Refrigerant Circuit.....221
The heat exchanger of the refrigerant influences the temperature of the air stream.

Soft ECU Air Conditioning.....223
The soft ECU air conditioning model is used to simulate the control of the vehicle's cabin temperature.

Overview of the Air Conditioning Subsystem

Overview

The Air conditioning system consists of electric components (a compressor and fan driven by an electric motor) and thermal interior model components (the refrigerant circuit, the air channel, and the cabin). The system also includes a Soft ECU Air conditioning model which regulates the cabin temperature.

If a vehicle is driven by an internal combustion engine, the air conditioning system is integrated in the belt drive of the traction motor and is therefore driven mechanically. This kind of mechanical system is inconvenient in electric vehicles, however, because in electric vehicles the primary energy (electrical energy) can be used directly to drive the air conditioning system.

The model described here simulates the air conditioning system of an electric vehicle in which the compressor and fan are driven electrically.

The model of the thermal interior is used to determine the average temperature in the vehicle cabin. This value depends on the ambient temperature, the manipulation via the air conditioning system, the fan, and the vehicle's material parameters.

The following illustration shows an overview of the Air conditioning system:

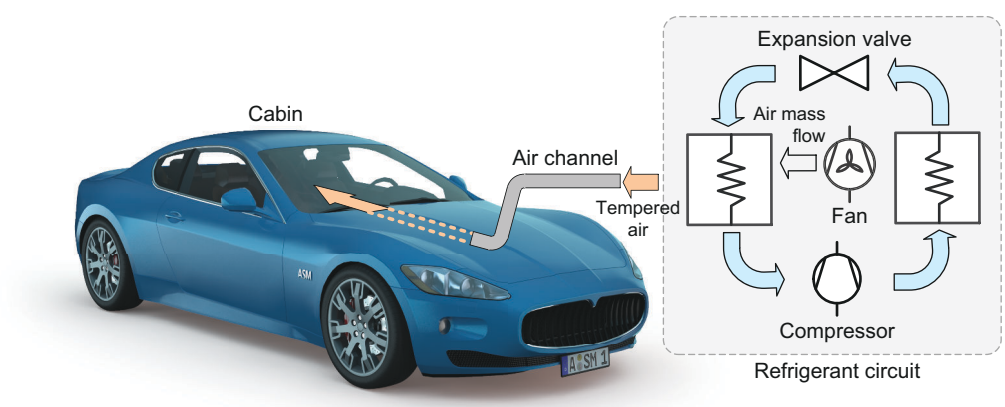

Air Channel

Description

The tempered air is pushed through air channels between the heat exchanger of the air conditioning system and the vehicle interior. These channels cause losses (cooling or heating of the air stream), which depend upon the thermal characteristics of the channels.

The geometry of the air channels is an important criterion for calculating the temperature of the air stream. For simplification, in the model it was assumed that the channels are always round.

The following illustration shows the representation of the air channels in Simulink.

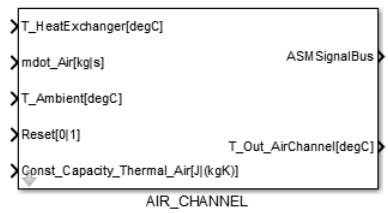

The temperature of the air stream in the channels is calculated as follows according to [Gro13].

The following equation calculates the temperature of the air mass that flows from the air channel into the cabin interior:

$$T_{Out,\,AirChannel} = T_W + \left(T_{HeatExch} - T_W\right) e^{\frac{\alpha_{AW}\,A_W\,n_W}{\dot{m}_{Air}\,c_{p,\,Air}}}$$

This temperature depends greatly on the temperature of the channel walls. When calculating the channel's wall temperature T_W, the heat exchange between the channel and the ambient air, and also the heat emission of the channel walls are taken into account.

$$\frac{dT_W}{dt} = \frac{\dot{m}_{Air}\,c_{p,\,Air}}{m_W\,c_{p,\,W}}\left(T_{HeatExch} - T_W\right)\left(1 - e^{\frac{\alpha_{AW}\,A_W\,n_W}{\dot{m}_{Air}\,c_{p,\,Air}}}\right) + \frac{1}{m_W\,c_{p,\,W}}$$

$$\left[\alpha_{AW}\,A_W\left(T_{Ambient} - T_W\right) + \alpha_W\,A_W\,\sigma\left(T_{Ambient}^4 - T_W^4\right)\right]$$

$$+\frac{1}{m_W c_{p,\,W}}\left[\alpha_{AW} A_W\left(T_{Ambient} - T_W\right) + \alpha_W A_W \sigma\left(T_{Ambient}^4 - T_W^4\right)\right]$$

where:

$T_{Out,\,AirChannel}$	is the temperature of the channel output air
T_W	is the temperature of the channel wall
$T_{HeatExch}$	is the temperature of the air heat exchanger
$T_{Ambient}$	is the ambient temperature
A_W	is the area of the channel wall
n_W	is the number of channels
$c_{p,\,Air}$	is the thermal coefficient of air
$c_{p,\,W}$	is the thermal coefficient of the channel wall
α_W	is the emission coefficient of the channel wall material
α_{AW}	is the transmission coefficient between ambient air and channel wall
m_W	is the mass of the channel wall
$\dot{m}_{Air}$	is the air mass flow
σ	is the Stefan-Boltzmann constant

Inports

The following table shows the inports:

Name	Unit	Description
Const_Capacity_Thermal_Air	[J/(kg K)]	Thermal capacity of air
mdot_Air	[kg/s]	Air mass flow
Reset	[0|1]	Reset
T_Ambient	[°C]	Ambient temperature
T_HeatExchanger	[°C]	Air temperature of heat exchanger

Outports

The following table shows the outports:

Name	Unit	Description
ASMSignalBus	[]	Signal bus that contains signals of ASM components. Refer to ASMSignalBus (ASM User Guide 🕮).
T_Out_AirChannel	[°C]	Air temperature at channel output

Parameters

The following table shows the parameters:

Name	Unit	Description
Const_Capacity_Thermal_Wall	[J/(kg K)]]	Thermal capacity of channel wall
Const_Coeff_Emission_Wall	[]	Emission coefficient of channel wall
Const_Coeff_Trm_Ambient_Wall	[W/(m^2 K)]	Transmission coefficient between ambient air and channel wall
Const_Density_Wall	[kg/m^3]	Density of air channel wall
Const_Length	[m]	Length of air channel
Const_Num_Channels	[]	Number of air channels
Const_r	[m]	Radius of air channel
Const_Thickness_Wall	[m]	Thickness of air channel wall
StepSize	[s]	Simulation step size

Related topics

References

Air Channel (ModelDesk Parameterizing 🕮)
History of the AIR_CHANNEL Block..... 507

Cabin

Description

The cabin model describes the thermal behavior of the vehicle cabin. It combines temperature changes that are caused by emission, convection, incoming air, and vehicle passengers.

The following illustration shows the Simulink representation of the cabin:

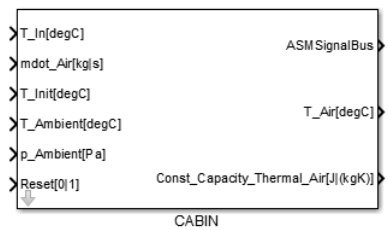

The factors represented in the model that influence the temperature inside the vehicle cabin are: ambient temperature, the heat output of the passenger bodies, the thermal conductivity of the chassis, and the supply of tempered air via the air conditioning/heating system, and the fan.

The initial starting temperature can also be set. It determines the temperature in the cabin when the simulation starts. This takes into consideration that the temperature in the cabin might be substantially higher than the ambient temperature. This can happen if the vehicle stood in the sun for a prolonged period of time, for example.

The cabin model is divided into two submodels: There is a submodel for the description and simulation of the cabin air and a submodel for the cabin wall. These two submodels are described in the following.

Interior air temperature

The interior air of the vehicle cabin is highly influenced by the air conditioning/heating system and fans.

The air conditioning system controls the temperature of the air stream that flows into the cabin interior. As a rule, after a certain time the temperature in the cabin approaches the temperature of the incoming air stream. The time to convergence also depends on the strength of the air stream.

However, additional factors also influence the interior temperature. Passengers cause an increase in temperature, which depends on the number of passengers and their heat emission. The thermal behavior of the car wall also greatly influences the interior air temperature.

The equations shown in the following calculate the change of the interior temperature (see [Gro13]). It is comprised by the sum of the individual thermal performances. P_{Air} describes the thermal power assumed by the air in the interior, P_{CW} the thermal power assumed by the interior wall of the cabin, $P_{Air \rightarrow CW}$ the heat exchange between the interior air and the interior wall of the vehicle cabin, and P_{Pass} the thermal power of the system via the passengers.

To calculate the temperature change, the sum of the powers is weighed with the air mass and the specific heat capacity of the air and the cabin wall.

$$\frac{dT_{Air}}{dt} = \frac{1}{m_{Air}\left(c_{p,\,Air} + c_{p,\,CW}\right)}\left(P_{Air} + P_{CW} + P_{Air \rightarrow CW} + P_{Pass}\right)$$

$$P_{Air} = \dot{m}_{Air}\, c_{p,\,Air}(T_{In} - T_{Air})$$

$$P_{CW} = \dot{m}_{Air}\, c_{p,\,CW}(T_{In} - T_{Air})$$

$$P_{Air \rightarrow CW} = -\alpha_{AirCW}\, A_{CW}(T_{Air} - T_{CW})$$

$$P_{Pass} = n_{Pass}\, P_E$$

where:

T_{In}	is the input temperature of air channel
T_{Air}	is the temperature of the cabin air
T_{CW}	is the temperature of the cabin wall
A_{CW}	is the area of the cabin wall
$c_{p,\,Air}$	is the thermal coefficient of air
$c_{p,\,CW}$	is the thermal coefficient of the cabin wall
α_{AirCW}	is the transmission coefficient between cabin air and cabin wall
n_{Pass}	is the number of passengers
P_E	is the heat emission of one passenger

Cabin wall

When considering the cabin wall, the thermal conductivity of the cabin wall and the ambient temperature are important.

The change in the temperature of the cabin wall is calculated via the sum of individual thermal power, which is weighed by the cabin wall's mass and specific conductivity [Gro13].

$P_{Air \rightarrow CW}$ describes the heat exchange between the indoor air and the inner wall of the vehicle cabin, $P_{CW \rightarrow Ambient}$ the heat exchange between the ambient air and the outside wall of the vehicle cabin, and $P_{Radiation}$ the thermal power removed from the system by heat emission.

$$\frac{dT_{CW}}{dt} = \frac{1}{m_{CW} c_{p,\,CW}}\left(P_{Air \rightarrow CW} + P_{CW \rightarrow Ambient} + P_{Radiation}\right)$$

$$P_{Air \rightarrow CW} = \alpha_{AirCW}\, A_{CW}(T_{Air} - T_{CW})$$

$$P_{CW \rightarrow Ambient} = \alpha_{AmbientCW}\, A_{CW}(T_{Ambient} - T_{CW})$$

$$P_{Radiation} = \sigma\left(T_{Ambient}^4 - T_{CW}^4\right)\left(\alpha_{Win}\,\mathrm{A}_{Win} + \alpha_C \mathrm{A}_C\right)$$

where:

$T_{Ambient}$	is the ambient temperature
m_{CW}	is the mass of the cabin wall
$\alpha_{AmbientCW}$	is the transmission coefficient between ambient air and cabin wall
α_{Win}	is the emission coefficient of the window material
α_C	is the emission coefficient of the cabin wall material
A_C	is the cabin area without window area
A_{Win}	is the window area
σ	is the Stefan-Boltzmann constant

The temperature of the cabin wall, in turn, affects the temperature of the interior air, so the result of the calculation is included in the calculation of the temperature change of the interior air.

Inports

The following table shows the inports:

Name	Unit	Description
mdot_Air	[kg/s]	Air mass flow
p_Ambient	[Pa]	Ambient pressure
Reset	[0|1]	Reset
T_Ambient	[°C]	Ambient temperature
T_In	[°C]	Temperature cabin input air
T_Init	[°C]	Initial cabin temperature

Outports

The following table shows the outports:

Name	Unit	Description
ASMSignalBus	[]	Signal bus that contains signals of ASM components. Refer to ASMSignalBus (ASM User Guide 🕮).
Const_Capacity_Thermal_Air	[J/(kg K)]	Thermal capacity of air
T_Air	[°C]	Temperature of cabin air

Parameters

The following table shows the parameters:

Name	Unit	Description
Const_A_Window	[%]	Window area in % of cabin
Const_Capacity_Thermal_Air	[J/(kg K)]]	Thermal capacity of air
Const_Capacity_Thermal_Wall	[J/(kg K)]	Thermal capacity of cabin wall
Const_Coeff_Emission_Wall	[]	Emission coefficient of cabin wall
Const_Coeff_Emission_Window	[]	Emission coefficient of window

Name	Unit	Description
Const_Coeff_Trm_Air_Wall	[W/(m^2 K)]	Transmission coefficient between cabin air and cabin wall
Const_Coeff_Trm_Ambient_Wall	[W/(m^2 K)]	Transmission coefficient between ambient air and cabin wall
Const_Density_Wall	[kg/m^3]	Density of cabin wall
Const_Density_Window	[kg/m^3]	Density of window
Const_Heat_Emission_Passenger	[W]	Heat emission of one passenger
Const_Height	[m]	Cabin height
Const_Length	[m]	Cabin length
Const_Num_Passengers	[]	Number of passengers
Const_Thickness_Wall	[m]	Thickness of cabin wall
Const_Thickness_Window	[m]	Thickness of window
Const_Width	[m]	Cabin width
StepSize	[s]	Simulation step size

Processing

The chassis wall is made of several different materials. In the model, however, the wall's various heat capacities are summarized as one heat capacity. The following table shows the values of common vehicle materials to help select appropriate parameter values:

Aluminum

- Heat capacity: 0.896 kJ/(kg*K)
- Emission coefficient: 0.04
- Density: 2700 kg/m^3

Steel

- Heat capacity: 0.47 kJ/(kg*K)
- Emission coefficient, sheet metal 0.65
- Density: 7870 kg/m^3

Glass

- Heat capacity: 0.83 kJ/(kg*K)
- Emission coefficient: 0.91-0.94
- Density: 2500 kg/m^3

Leather

- Heat capacity: 1.5 kJ/(kg*K)
- Emission coefficient: 0.75-0.94

Related topics

References

Cabin (ModelDesk Parameterizing 🕮)

Compressor

Description

The compressor is responsible for cooling the air stream. It is integrated in the refrigerant circuit and makes the refrigerant move through the circuit. The flow of the refrigerant depends on the compressor's mechanical power. The mechanical power is a relevant value for the flow of the refrigerant and thus for the cooling and heating of the ambient air.

As a rule, the compressor is operated as part of the high-voltage system at 300 V, for example.

The following illustration shows the representation of the compressor in Simulink.

The following diagram shows the representation of the compressor in the model of the air conditioning system. It basically consists of a permanent magnet synchronous motor (PMSM) and the load characteristic.

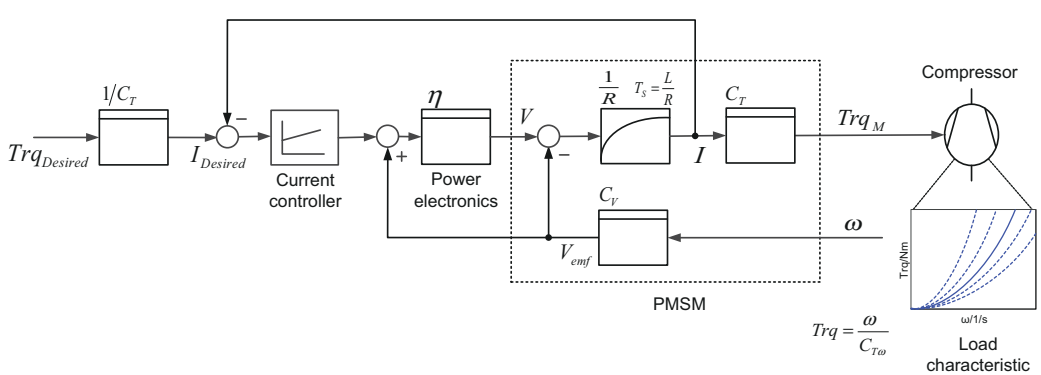

The target value for the compressor is the mechanical power. The mechanical power P_{me} is predefined by the maximum power P_{max} for the compressor, scaled by a control signal. If a control signal has a value > 0, this indicates that the air conditioning system is used for cooling. A value < 0 indicates that the system is used for heating (as a heat pump). A control signal with the value = 0 indicates that the air conditioning system is turned off. In addition, the control signal of the compressor also depends on the fan's control signal. The compressor should not run when the fan is off, because then the cooled ambient air is not pushed into the vehicle interior. The mechanical power is calculated by the equation:

$$P_{me} = Ctrl_Compressor \cdot P_{max}$$

The electric machine is simulated as a first-order transfer function (PT1) with the factor $\frac{1}{R}$ as the gain and $\frac{L}{R}$ as the time constant. The machine-speed-dependent back EMF voltage V_{emf} is calculated via the machine voltage constant C_V.

$$G(s) = \frac{\frac{1}{R}}{1 + \frac{L}{R}s}$$

where:

R is the machine resistance

L is the machine inductance

The power electronics block represents the efficiency of the converter. The current controller is implemented as a PI controller with the back EMF voltage as the precontrol value.

The desired current is calculated from the desired torque via the machine torque constant C_T.

The target torque value $Trq_{Desired}$ is calculated for the PMSM by the target value for the mechanical power P_{me} and constants of the load characteristic $C_{T\omega}$.

$$Trq_{Desired} = \sqrt[3]{P_{me}\, C_{T\omega}^2}$$

The load characteristic establishes the relationship between the compressor's torque Trq and speed ω. To do this, a look-up table is used to help determine the speed from the torque.

In general, compressors and fans have a quadratic relationship between the speed and the torque. This relationship is represented as follows:

$$Trq = \frac{\omega^2}{C_{T\omega}^2} \Leftrightarrow \omega = C_{T\omega}\sqrt{Trq}$$

In addition, the following applies for the mechanical power P_{me}:

$$P_{me} = \omega\, Trq \Rightarrow P_{me} = \frac{\omega^3}{C_{T\omega}^2}$$

With a suitable selection of the constant $C_{T\omega}$, the load characteristics can be set for any kind of compressor. The thermal components of the refrigerant circuit (condenser, evaporator, etc.) are not modeled independently in this model, but are taken into account in the selection of the constant $C_{T\omega}$.

In addition, the load characteristic contains a PT-1 element with the amplification factor of 1 and a time constant. This PT-1 element gives the model its dynamics. The time constant indicates how the speed adapts to the time behavior of the torque. The smaller the chosen time constant, the better the speed's time behavior approximates the time behavior of the torque.

Inports

The following table shows the inports:

Name	Unit	Description
Ctrl_Compressor	[-1_1]	Control signal compressor (in the range -1_1): ▪ Negative: Heating ▪ Positive: Cooling
Reset	[0|1]	Reset
V	[V]	Supply voltage electric machine

Outports

The following table shows the outports:

Name	Unit	Description
ASMSignalBus	[]	Signal bus that contains signals of ASM components. Refer to ASMSignalBus (ASM User Guide 🕮).
I	[A]	Current electric machine
P	[W]	Compressor power

Parameters

The following table shows the parameters:

Name	Unit	Description
Const_C_Load	[sqrt(1/(W s^3))]	Constant load characteristic
Const_Efficiency_PowerElectronics_PMSM	[]	Efficiency power electronics
Const_I_Limit_PMSM	[A]	Current limit current controller
Const_Ki_PMSM	[]	Integral gain current controller
Const_Kp_PMSM	[]	Proportional gain current controller
Const_L_PMSM	[H]	Inductance electric machine
Const_P_Max	[W]	Maximum mechanical power
Const_R_PMSM	[Ω]	Resistance electric machine
Const_Time_Constant_Load	[s]	Load characteristic time constant
Const_TrqConst_PMSM	[Nm/A]	Torque constant electric machine
Const_VConst_PMSM	[V/rpm]	Voltage constant electric machine
Const_V_Limit_PMSM	[V]	Voltage limit current controller
StepSize	[s]	Simulation step size

Related topics

References

Compressor AC (ModelDesk Parameterizing 🕮)
History of the COMPRESSOR Block..... 519

Fan

Description

The fan is responsible for conditioning the air stream. It is located directly behind the evaporator and pushes the tempered ambient air into the vehicle interior.

The following illustration shows the representation of the fan in Simulink.

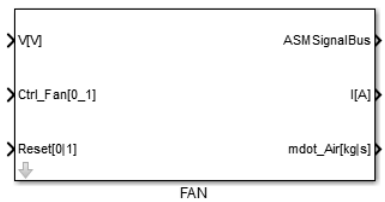

The following diagram shows the representation of the fan in the model of the air conditioning system.

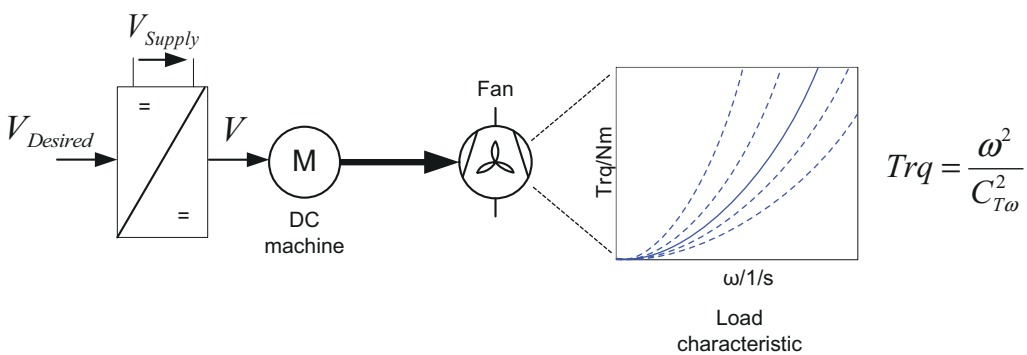

The fan basically consists of a permanent magnet DC motor and a load characteristic.

The target value for the fan is the voltage $V_{Desired}$. It is determined by a control signal that scales the supply voltage. 0 means that the fan is shut off. 1 means that it is driven at maximum voltage. As a rule, the fan is run in the low-voltage system with voltages mainly between 12 and 24 volt.

$$V_{Desired} = Ctrl_{Fan} \cdot V_{Supply}$$

where:

V_{Supply} is the network voltage

The DC motor is responsible for generating the torque. The model of the DC motor is set up according to its voltage equation:

$$v_A = R_A\, i_A + L_A \frac{di_A}{dt} + \phi\, \omega$$

The torque is determined by:

$$Trq = \phi i_A$$

where:

ϕ is the magnetic flow of the DC motor
ω is the rotational DC motor speed
L_A is the armature inductance
R_A is the armature resistance
i_A is the armature current

Because permanent magnets are used for excitation, no excitation circuit needs to be modeled. The torque is passed on to the load characteristics.

The load characteristic of the fan is set up like the load characteristic of the compressor (see Compressor on page 208). The difference between the load characteristic of the compressor and the fan lies in the parameterization. A different $C_{T\omega}$ and a different time constant are selected for the fan.

The air mass flow determines which air mass is fed into the system per time unit. The flow depends on the fan that is used. The ratio of the air mass flow is equal to the ratio of the fan speeds. Thus, the current air mass flow can be determined by specifying the nominal rotational fan speed and the nominal air mass flow, and taking into account the current speed.

$$\dot{m}_{Air} = \frac{n_{Fan}\,\dot{m}_{Fan,Nom}}{n_{Fan,Nom}}$$

where:

$\dot{m}_{Air}$ is the air mass flow
$\dot{m}_{Fan,Nom}$ is the nominal air mass flow
n_{Fan} is the rotational fan speed
$n_{Fan,Nom}$ is the nominal rotational fan speed

Inports

The following table shows the inports:

Name	Unit	Description
Ctrl_Fan	[0_1]	Control signal fan (in the range 0_1):
Reset	[0|1]	Reset
V	[V]	Supply voltage DC machine

Outports

The following table shows the outports:

Name	Unit	Description
ASMSignalBus	[]	Signal bus that contains signals of ASM components. Refer to ASMSignalBus (ASM User Guide 🕮).
I	[A]	Current DC machine
mdot_Air	[kg/s]	Air mass flow

Parameters

The following table shows the parameters:

Name	Unit	Description
Const_C_Load	[sqrt(1/(W s^3))]	Constant load characteristic
Const_L_A	[H]	Rotor inductance
Const_mdot_Nom_Fan	[kg/min]	Nominal air mass flow
Const_n_Nom_Fan	[rpm]	Nominal rotational speed
Const_Psi_E	[Vs]	Flux induced by magnet
Const_R_A	[Ohm]	Rotor resistance
Const_Time_Constant_Load	[s]	Load characteristic time constant
StepSize	[s]	Simulation step size

Related topics

References

Fan (ModelDesk Parameterizing 🕮)

Light

Description

The light model calculates the current according to the voltage. For the load a load reference-arrow system is used. The current flowing into the load is positive.

The next illustration shows the Simulink representation of the load.

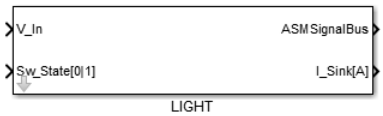

The equation of the system can be written as

$$i = \frac{v}{R}$$

$$R = \frac{V_N^2}{P_N}$$

i Current
v Voltage
R Resistance
V_N Nominal voltage
P_N Nominal power

Inports

The following table shows the inports:

Name	Unit	Description
Sw_State	[0|1]	Switch state: ▪ 0: Off ▪ 1: On
V_In	[V]	Voltage

Outports

The following table shows the outports:

Name	Unit	Description
ASMSignalBus	[]	Signal bus that contains signals of ASM components. Refer to ASMSignalBus (ASM User Guide 🕮).
I_Sink	[A]	Current

Parameter

The following table shows the block parameters:

Name	Unit	Description
Const_P_Nominal	[W]	Nominal power
Const_V_Nominal	[V]	Nominal voltage

Related topics

References

Light Bulb (ModelDesk Parameterizing 🕮)

Lighting System

Description

The LIGHTING_SYSTEM block calculates the current in relation to the voltage for the different automotive lights like the headlight, fog light, brake light and turn signal indicator.

For the load, a consumer reference arrow system is used. The current flowing into the load is a positive current.

The following illustration shows the Simulink representation of the lighting system.

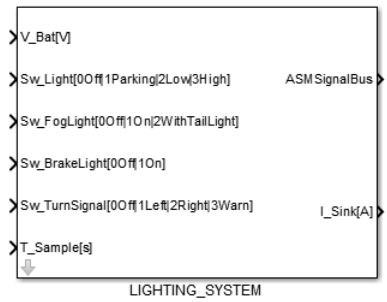

The equation of the system can be written as

$$i = \frac{v}{R}$$

$$R = \frac{V_N^2}{P_N}$$

where:

i	is the current
v	is the voltage
R	is the resistance
V_N	is the nominal voltage
P_N	is the nominal power

Inports

The following table shows the inports:

Name	Unit	Description
Sw_BrakeLight	[0|1]	Switch for state brake light ▪ 0: Off ▪ 1: On
Sw_FogLight	[0|1|2]	Switch for state fog light ▪ 0: Off ▪ 1: On ▪ 2: With tail light
Sw_Light	[0|1|2|3]	Switch for state headlight ▪ 0: Off ▪ 1: Parking ▪ 2: Low-beam ▪ 3: High-beam
Sw_TurnSignal	[0|1|2|3]	Switch for state turn signal indicator ▪ 0: Off ▪ 1: Left ▪ 2: Right ▪ 3: Warn

Name	Unit	Description
T_Sample	[s]	Sample time
V_In	[V]	Voltage

Outports

The following table shows the outports:

Name	Unit	Description
ASMSignalBus	[]	Signal bus that contains signals of ASM components. Refer to ASMSignalBus (ASM User Guide 🕮).
I_Sink	[A]	Current

Parameters

The following table shows the block parameters:

Name	Unit	Description
Const_P_BrakeLight_Nominal	[W]	Brake light nominal power consumption
Const_P_FogLight_Nominal	[W]	Fog light nominal power consumption
Const_P_FogTailLight_Nominal	[W]	Rear fog light nominal power consumption
Const_P_HighBeam_Nominal	[W]	High-beam nominal power consumption
Const_P_LowBeam_Nominal	[W]	Low-beam nominal power consumption
Const_P_ParkingLight_Nominal	[W]	Parking light nominal power consumption
Const_P_TurnSignal_Nominal	[W]	Turn signal nominal power consumption
Const_TurnSignal_Frequency	[Hz]	Turn signal frequency
Const_V_Nominal	[V]	Nominal voltage

Related topics

References

History of the LIGHTING_SYSTEM Block 523
Lighting System (ModelDesk Parameterizing 🕮)

PTC Grid Defroster

Description

The rear window is heated by a heating wire with PTC resistance.

At high temperature there is high resistance and the heating is regulated respectively. The following illustration shows an example of the change in the temperature and load current after the heater is switched on.

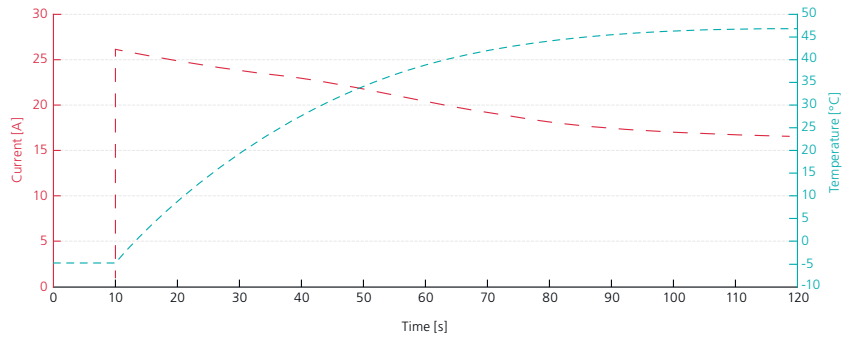

The PTC grid defroster model calculates the current and temperature in relation to the voltage and the PTC resistance.

For the load, a consumer reference arrow system is used. The current flowing into the load is a positive current.

The following illustration shows the Simulink representation of the PTC_GRID_DEFROSTER block:

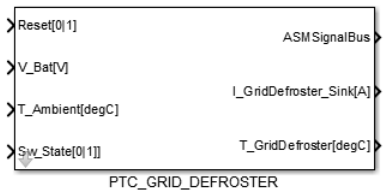

The equation of the system can be written as

$$\frac{dU}{dt} = P_{el} - \dot{Q}$$

$$c_v\, m\, \dot{T} = \frac{v^2}{R(T)} - A\, \alpha \left(T - T_{Ambient} \right)$$

$$i = \frac{v}{R(T)}$$

where:

$\frac{dU}{dt}$	is the internal energy
P_{el}	is the electric power
$\dot{Q}$	is the heat flux
c_v	is the specific heat capacity
m	is the mass
A	is the area
α	is the heat transfer coefficient
v	is the voltage
i	is the current
R	is the PTC resistance
T	is the temperature
$T_{Ambient}$	is the ambient temperature

Inports

The following table shows the inports:

Name	Unit	Description
Reset	[0|1]	Reset
Sw_State	[0|1]	Switch state ▪ 0: off ▪ 1: on
T_Ambient	[°C]	Ambient temperature
V_Bat	[V]	Voltage

Outports

The following table shows the outports:

Name	Unit	Description
ASMSignalBus	[]	Signal bus that contains signals of ASM components. Refer to ASMSignalBus (ASM User Guide 🕮).
I_GridDefroster_Sink	[A]	Current
T_GridDefroster	[°C]	Grid defroster temperature

Parameters

The following table shows the block parameters:

Name	Unit	Description
Const_alpha	[W/(Kg m^2)]	Heat transfer coefficient of grid material
Const_cv	[J/(kg K)]	Specific heat capacity of grid material
Const_d_GridLine	[mm]	Diameter of grid line

Name	Unit	Description
Const_Dens	[kg/m^3]	Density of grid material
Const_l_Grid	[m]	Total length of grid
Map_R_PTC	[Ω]	Mapping of PTC resistance in relation to temperature

Related topics

References

History of the PTC_GRID_DEFROSTER Block 528
PTC Grid Defroster (ModelDesk Parameterizing 🕮)

PTC Heater

Description

The PTC heater model calculates the current and temperature according to the voltage and the PTC resistance. A load reference-arrow system is used for the load. The current flowing into the load is positive.

The next illustration shows the Simulink representation of the PTC heater.

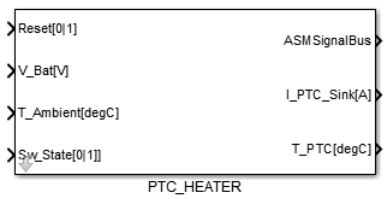

The equation of the system can be written as

$$\frac{dU}{dt} = P_{el} - \dot{Q}$$

$$c_v\, m\, \dot{T} = \frac{v^2}{R(T)} - A\, \alpha \left(T - T_{Ambient} \right)$$

$$i = \frac{v}{R(T)}$$

where:

$\frac{dU}{dt}$	is the internal energy
P_{el}	is the electric power
$\dot{Q}$	is the heat flux
c_v	is the specific heat capacity
m	is the mass
A	is the area
α	is the heat transfer coefficient
v	is the voltage
i	is the current
R	is the PTC resistance
T	is the temperature
$T_{Ambient}$	is the ambient temperature

Inports

The following table shows the inports:

Name	Unit	Description
Reset	[0|1]	Reset
Sw_State	[0|1]	Switch state: ▪ 0: Off ▪ 1: On
T_Ambient	[°C]	Ambient temperature
V_Bat	[V]	Voltage

Outports

The following table shows the outports:

Name	Unit	Description
ASMSignalBus	[]	Signal bus that contains signals of ASM components. Refer to ASMSignalBus (ASM User Guide 🕮).
I_PTC_Sink	[A]	Current
T_PTC	[°C]	PTC temperature

Parameter

The following table shows the block parameters:

Name	Unit	Description
Const_A	[m^2]	Area
Const_alpha	[W/(Kg m^2)]	Heat transfer coefficient alpha
Const_cv	[J/(kg K)]	Specific heat capacity cv
Const_m	[kg]	Mass

Name	Unit	Description
Map_resistance	[Ω]	Resistance = f(temperature[K])

Related topics

References

PTC Heater (ModelDesk Parameterizing 🕮)

Refrigerant Circuit

Description

The model of the refrigerant circuit calculates the temperature of the heat exchanger.

The following illustration shows the Simulink representation of the refrigerant circuit:

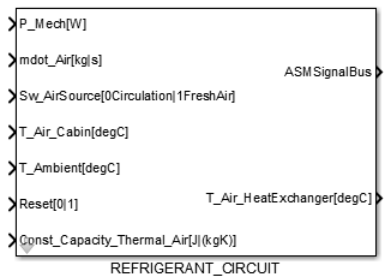

The temperature in the heat exchanger depends on the compressor performance of the air conditioning system, the ambient temperature, and the air stream that flows around the heat exchanger. To calculate the air conditioning system's coefficient of performance (COP) it is necessary to determine the thermal power converted at the heat exchanger. This value places the air conditioning system's electrical power and thermal power in relation to each other.

The equation for the temperature of the heat exchanger is:

$$T_{HeatExchanger} = T_{In} - \frac{P_{Compressor}\, COP}{\dot{m}_{Air}\, c_{p,\,Air}}$$

where:

$T_{HeatExchanger}$	is the out temperature (heat exchanger)
T_{In}	is the in temperature (ambient or cabin temperature)
$P_{Compressor}$	is the power compressor
COP	is the coefficient of performance
$\dot{m}_{Air}$	is the air mass flow
$c_{p,\,Air}$	is the thermal capacity of air

Furthermore, the model of the refrigerant circuit allows switching between recirculated air mode and fresh air mode.

The equation expresses this as follows: For fresh air mode, the ambient temperature is used for temperature T_{In}; for recirculated air mode, the cabin temperature is used.

In addition, the time behavior is simulated for the refrigerant circuit. The conversion of the compressor's mechanical power to the temperature of the heat exchanger is subject to a time delay. This delay is simulated by a PT-1 element with a gain of 1 and a time constant.

Inports

The following table shows the inports:

Name	Unit	Description
Const_Capacity_Thermal_Air	[J/(kg K)]	Thermal capacity air
mdot_Air	[kg/s]	Air mass flow
P_Mech	[W]	Power compressor
Reset	[0|1]	Reset
Sw_AirSource	[0|1]	Switch air source: ▪ 0: circulation (cabin air) ▪ 1: fresh air (ambient air)
T_Air_Cabin	[°C]	Temperature cabin air
T_Ambient	[°C]	Ambient temperature

Outports

The following table shows the outports:

Name	Unit	Description
ASMSignalBus	[]	Signal bus that contains signals of ASM components. Refer to ASMSignalBus (ASM User Guide 🕮).
T_Air_HeatExchanger	[°C]	Air temperature heat exchanger

Parameters

The following table shows the parameters:

Name	Unit	Description
Const_Coeff_Performance	[]	Coefficient of performance (COP)
Const_TimeConstant	[s]	Time constant refrigerant circuit
StepSize	[s]	Simulation step size

Related topics

References

Refrigerant Circuit (ModelDesk Parameterizing 🕮)

Soft ECU Air Conditioning

Description

The SOFT_ECU_AIR_CONDITIONING model is used to simulate the control of the vehicle's cabin temperature.

The following illustration shows the Simulink representation of the model:

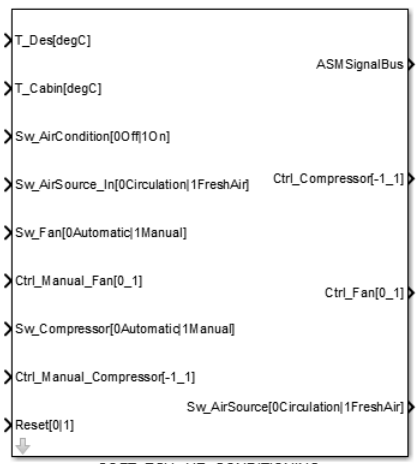

SOFT_ECU_AIR_CONDITIONING

The model's input signals are the temperature desired by the user and the actual temperature inside the vehicle cabin. These values are used to calculate the control signals for the performance of the compressor and the fan. The performance of the compressor highly influences the height of the temperature change, whereas the performance of the fan influences the temporal variation of the temperature. As a result, a change in compressor performance has significantly greater influence on the height of the cabin temperature than a change in the fan performance. For this reason, the compressor performance is adjusted by a PI controller to match the temperature difference between the desired and the actual temperature, while the fan performance is tracked linearly.

Control of the compressor performance

The performance of the compressor is adjusted via a PI controller to match the temperature difference between the desired and the actual temperature.

The equation of the PI controller is:

$$y = K_\rho \cdot e + \frac{K_\rho}{T_i} \int e \, dt$$

where:

e is the temperature difference

K_ρ is the proportional constant

T_i is the integration time

y is the output signal of the controller

The temperature difference *e* and the control signal *y* are limited to a maximum value. Limiting the temperature difference *e* is necessary in order to limit the increase of the cabin temperature in relation to time. This ensures a moderate temperature change and contributes to the well-being of the vehicle occupants. The limitation of control signal *y* is necessary because the model of the air conditioning system can only use control signals within a predefined range.

Consequently, the control signal for the compressor performance is summarized as follows:

$$y_{cmp} = \begin{cases} -1, & y < -1 \\ y, & otherwise \\ 1, & y > 1 \end{cases}$$

It is possible to switch between manual and automatic compressor mode. In manual mode, the compressor performance can be entered manually, fully independently of the automatic control.

Control of the fan performance

The fan performance significantly influences the time behavior of the temperature change, whereas its influence on the height of the temperature change is relatively small. The noise emission is also analyzed to determine the fan performance. The rule is that the noise of the fan increases when the fan's performance increases.

The objective of the control is therefore to provide for high fan performance when there is a large temperature difference, and to decrease it in dependence on the temperature difference. The fan performance is also reduced if the compressor and fan are being operated at maximum capacity. In addition, the fan should not react to temperature under-swing and over-swing, caused by the control of the compressor performance. This means that the fan performance is indeed reduced, but not increased. However, when the desired temperature changes, the fan performance starts again with a high value.

It is possible to switch between manual and automatic fan mode. In manual mode, the fan performance can be entered manually, fully independently of the automatic control.

Inports

The following table shows the inports:

Name	Unit	Description
Ctrl_Manual_Compressor	[-1_1]	Manual compressor control signal (in the range -1_1): ▪ Negative: heating ▪ Positive: cooling
Ctrl_Manuel_Fan	[0_1]	Manual fan control signal (in the range 0_1):
Reset	[0|1]	Reset
Sw_AirSource_In	[0|1]	Switch for air source: ▪ 0: Circulation (cabin air) ▪ 1: Fresh air (ambient air)
Sw_Compressor	[0|1]	Compressor mode: ▪ 0: Automatic (controller) ▪ 1: Manual
Sw_Fan	[0|1]	Fan mode: ▪ 0: Automatic (controller) ▪ 1: Manual
T_Cabin	[°C]	Current cabin temperature
T_Des	[°C]	Desired cabin temperature

Outports

The following table shows the outports:

Name	Unit	Description
ASMSignalBus	[]	Signal bus that contains signals of ASM components. Refer to ASMSignalBus (ASM User Guide 🕮).
Ctrl_Compressor	[-1_1]	Control signal compressor (in the range -1_1): ▪ Negative: heating ▪ Positive: cooling
Ctrl_Fan	[0_1]	Control signal fan (in the range 0_1):
Sw_AirSource	[0|1]	Switch air source: ▪ 0: Circulation (cabin air) ▪ 1: Fresh air (ambient air)

Parameters

The following table shows the parameters:

Name	Unit	Description
Const_Ctrl_LowLim_Fan	[]	Lower limit output fan controller
Const_Ctrl_UpLim_Fan	[]	Upper limit output fan controller
Const_Kp_Compressor	[1/°C]	Proportional gain compressor controller
Const_Kp_Fan	[1/°C]	Proportional gain fan controller
Const_T_Diff_LowLim	[°C]	Lower limit temperature difference

Name	Unit	Description
Const_T_Diff_UpLim	[°C]	Upper limit temperature difference
Const_Ti_Compressor	[s]	Integral time compressor controller
StepSize	[s]	Simulation step size

Related topics

References

Soft ECU Air Conditioning (ModelDesk Parameterizing 🕮)

Demos

Where to go from here

Information in this section

Vehicle Electrical System.....229
The **Vehicle Electrical System** model simulates the battery voltage, depending on the charge and discharge current of the starter and the alternator and different electrical loads like air conditioning, the lighting system, PTC heater, electric machine, etc.

Hybrid Vehicle Model.....231
There are three main hybrid drive topologies.

Battery Electric Vehicle (BEV) with Traffic.....239
The **Battery electric vehicle with Traffic** model simulates the dynamics of a passenger car with traffic elements.

Squirrel Cage Asynchronous Machine.....242
Describes the **Squirrel Cage Asynchronous Machine** demo model.

Brushless DC Machine.....244
The **Electric Drive Closed Loop BLDC** model simulates the control of a brushless DC machine (BLDC), including a controller, a battery, an inverter, a motor, and the mechanics of an engine shaft.

Permanent Magnet Synchronous Machine.....246
The **Electric Drive closed Loop PMSM Nonlinear** model simulates the control of a permanent magnet synchronous machine (PMSM).

Battery Electric Vehicle (BEV).....248
The **Battery electric vehicle** (BEV) model simulates the dynamics of a passenger car.

Permanent Magnet Synchronous Machine (PMSM) with 3-Level Inverter.....252
Describes the **Permanent Magnet Synchronous Machine (PMSM) with 3-Level inverter** demo model.

ASM Modules.....254
Contains the modules of the models.

Subsystems.....353
To describe the subsystems inside the ASM modules.

Information in other sections

History of the Electric Components Demo Models.....541
Provides an overview of the new features and migration of the ASM demo model in the previous Releases.

Vehicle Electrical System

Where to go from here

Information in this section

Basics on the Vehicle Electrical System Demo Model.....229
Gives you basic information about the Vehicle Electrical System Demo Model.

Overview of the Vehicle Electrical System Model.....229
Gives you an overview of the Vehicle Electrical System Model showing the ASM modules that are implemented in the model.

Basics on the Vehicle Electrical System Demo Model

Introduction

This topic gives you basic information about the Vehicle Electric System Demo Model.

Basics

The **Vehicle Electrical System** model simulates the battery voltage, depending on the charge and discharge current of the starter and the alternator and different electrical loads like air conditioning, the lighting system, PTC heater, electric machine, etc. As power supply, two battery systems are included. A standard low voltage battery that represents the lead-acid starter battery and two multicell high voltage lithium ion batteries connected in parallel circuit. Also, the torque load of the engine crankshaft, produced by electric components, is simulated.

Overview of the Vehicle Electrical System Model

Introduction

This topic gives you an overview of the Vehicle Electrical System Model showing the ASM modules that are implemented in the model.

Opening the Model

Refer to How to Start with an ASM Demo Model via MATLAB (ASM Electric Components Model Description 🕮).

Top layer

The following illustration shows the top layer of the Simulink model:

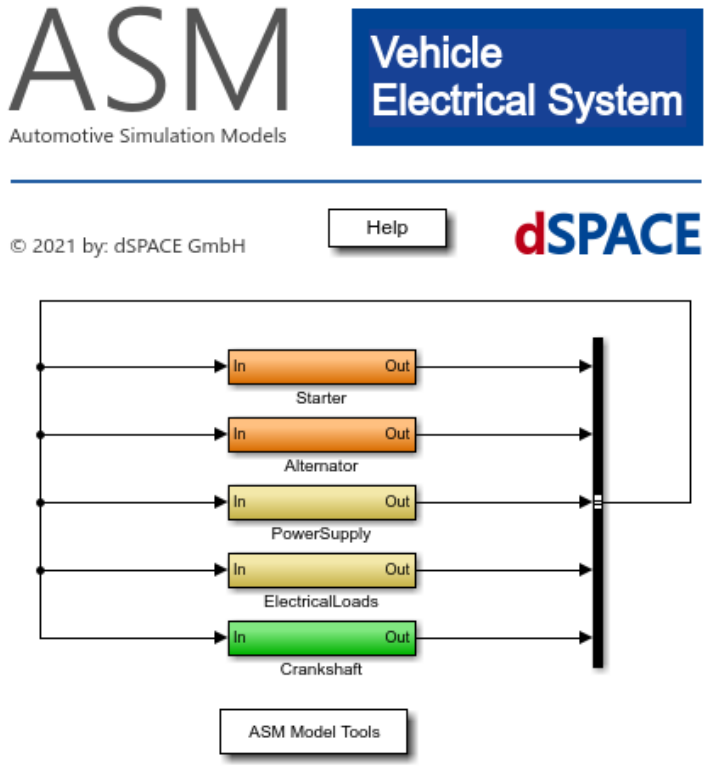

ASM modules

The model consists of the following ASM modules:

- Starter Module on page 338
- Alternator Module on page 256
- Battery System Module on page 258 as power supply
- Electrical Loads Module on page 278
- Crankshaft Module on page 260

Hybrid Vehicle Model

Where to go from here

Information in this section

Overview of the Hybrid Vehicle Models.....231
Vehicle Dynamics Hybrid Model.....233
Gasoline Engine Hybrid Model 236

Overview of the Hybrid Vehicle Models

Hybrid Vehicle Models

Overview

There are various hybrid drive topologies. The three main ones are:

- Series hybrid drive
- Parallel hybrid drive
- Series-parallel hybrid drive

When in a parallel hybrid drive the EM (electric motor) and the ICE (internal combustion engine) are connected by a common shaft, the parallel hybrid drive is also called a *single shaft hybrid*. When both the ICE and EM propel the vehicle, their rotational speeds are identical. The rotational speeds of the ICE and the EM are added up, so the ICE can be smaller than in a conventional drive but can have the same drive power.

The **Vehicle Dynamics Hybrid** (Vehicle Dynamics Hybrid Model on page 233) and the **Engine Gasoline Hybrid** (Gasoline Engine Hybrid Model on page 236) demo models simulate parallel hybrid drivetrain structures. They contain components for the modification of standard automotive drivetrains and simulate mechanical and electric components such as clutches, electric machines, and the battery. To enable the simulation of state-of-the-art hybrid modes such as electric driving, power boost or recuperation, the model includes a soft ECU for hybrid powertrain management.

Use cases

The ASM hybrid models were developed to support two main simulation use cases:

1. Simulation of hybrid drivetrains in combination with gasoline engine models for:
   - Developing and testing hybrid powertrain management systems
   - ECU tests for engine ECUs in combination with electric motor controllers
   - Fuel consumption investigations
2. Simulation of hybrid drivetrains in combination with vehicle dynamics and traffic models for:
   - Developing and testing regenerative braking systems
   - Developing environment-based driving strategies for fuel efficiency enhancements

The following figure gives a functional overview of the parallel hybrid vehicle model and its basic components. The arrows indicate the signal direction: i.e., the direction in which the components communicate with each other. In a real vehicle, information between components is exchanged via data bus signals, actuator signals, or sensor signals. The intelligent core component of a hybrid vehicle is called the hybrid manager (Refer to Torque Manager P2 Module on page 322). One of its responsibilities is energy management (operating strategy). The hybrid manager is the master of all other electronic control units (ECUs) and uses its energy management component to coordinate them. Using intelligent logic, the energy management chooses a hybrid mode which allocates the driver's desired torque across the EM and ICE.

Possible hybrid modes are:

- Energy recuperation
- Electric driving
- Load point shifting
- Exclusive ICE mode
- Power boost

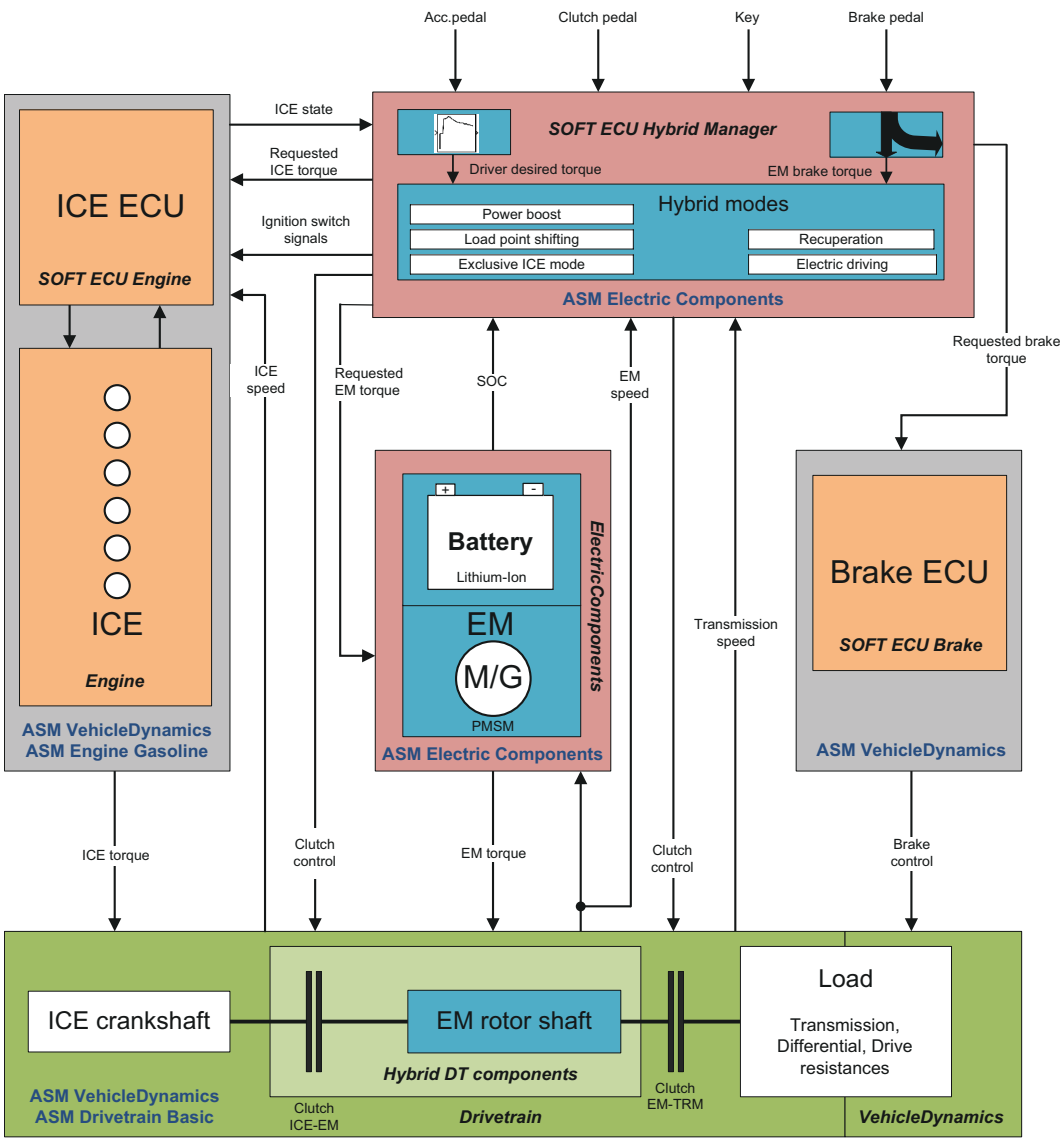

Vehicle Dynamics Hybrid Model

Where to go from here

Information in this section

Basics on the Vehicle Dynamics Hybrid Demo Model.....234
Gives you basic information about the Vehicle Dynamics Hybrid Demo Model.

Overview of the Vehicle Dynamics Hybrid Model..... 234
Gives you an overview of the Vehicle Dynamics Hybrid Model showing the ASM modules that are implemented in the model.

Basics on the Vehicle Dynamics Hybrid Demo Model

Introduction

This topic gives you basic information about the Vehicle Dynamics Hybrid Demo Model.

Basics

The Vehicle Dynamics Hybrid model simulates the dynamics of a passenger car. The vehicle is composed of an engine, electric components, rigid parallel hybrid drivetrain, rigid vehicle body, and four wheels. The model represents the vehicle's longitudinal, lateral, and vertical dynamics and simulates in detail a rigid parallel hybrid drivetrain, suspension kinematics and compliance, tire-road friction forces and moments, steering and brakes. The combustion process in the engine is not modeled.

Note

To run the Vehicle Dynamics Hybrid demo model, the ASM Electric Components Library must be used in combination with the ASM Vehicle Dynamics Library and the ASM Environment Library. Otherwise, some Simulink blocks of the demo model will have bad links to the missing libraries.

Overview of the Vehicle Dynamics Hybrid Model

Introduction

This topic gives you an overview of the Vehicle Dynamics Hybrid Model showing the ASM modules that are implemented in the model.

Opening the model

Refer to How to Start with an ASM Demo Model via MATLAB (ASM Electric Components Model Description 🕮).

Top layer

The following illustration shows the top layer of the Simulink model:

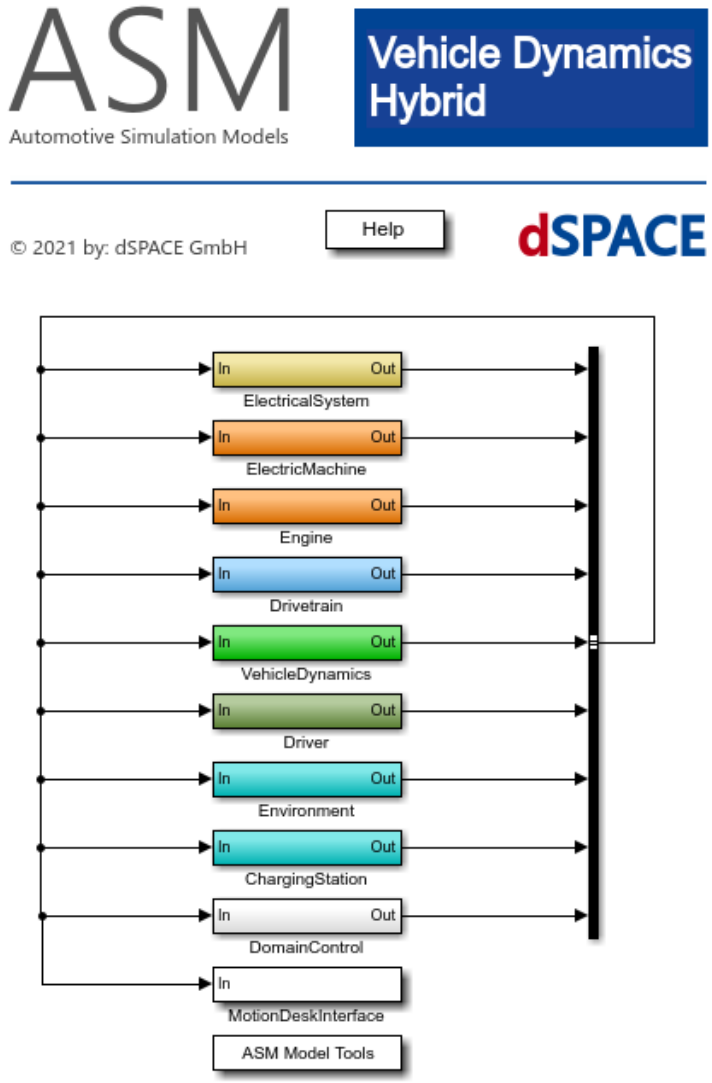

ASM modules

The model contains the following ASM modules:

- Electrical System Module on page 286
- Electric Machine Basic Module on page 284
- Engine Basic Module on page 289
- Drivetrain Hybrid Basic Module on page 270
- Vehicle Dynamics Module on page 343
- Driver Module on page 260
- Environment Module on page 311
- Charging Station Module on page 259
- Start System Module on page 339

- Torque Manager P2 Module on page 322
- Driver Assistance Simple Module on page 264

Gasoline Engine Hybrid Model

Where to go from here

Information in this section

Basics on Gasoline Engine Hybrid Model Demo Model.....236
Gives you basic information about the **Gasoline Engine Hybrid** Demo Model.

Overview of the Gasoline Engine Hybrid Model.....237
Gives you an overview of the **Gasoline Engine Hybrid** Model showing the ASM modules that are implemented in the model.

Basics on Gasoline Engine Hybrid Model Demo Model

Introduction

This topic gives you basic information about the **Gasoline Engine Hybrid** Demo Model.

Basics

The Gasoline Engine Hybrid Model is a Simulink model used to simulate turbocharged gasoline engines with manifold or direct injection in combination with electric components and a parallel hybrid drivetrain model including automatic transmission.

Note

To run the **Gasoline Engine Hybrid** demo model, the **ASM Electric Components Library** must be used in combination with the ASM Engine Gasoline Library and the ASM Drivetrain Basic Library. Otherwise, some Simulink blocks of the demo model will have bad links to the missing libraries.

Overview of the Gasoline Engine Hybrid Model

Introduction

This topic gives you an overview of the **Gasoline Engine Hybrid** Model showing the ASM modules that are implemented in the model.

Opening the model

Refer to How to Start with an ASM Demo Model via MATLAB (ASM Electric Components Model Description 🕮).

Top layer

The following illustration shows the top layer of the Simulink model.

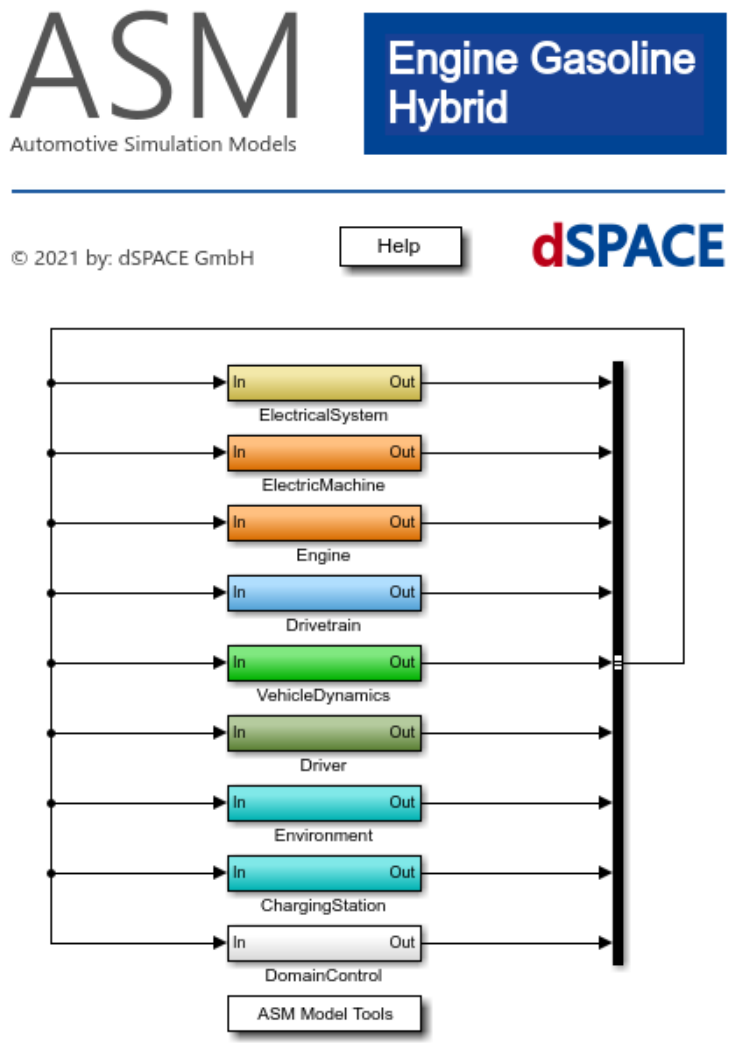

ASM modules

The model contains the following ASM modules:

- Electrical System Module on page 286
- Electric Machine Basic Module on page 284
- Engine Gasoline Module on page 292
- Drivetrain Hybrid Basic Module on page 270
- Vehicle Dynamics Basic Module on page 351
- Driver Basic Module on page 267
- Environment Basic Module on page 298
- Charging Station Module on page 259
- Start System Module on page 339
- Torque Manager P2 Module on page 322

Battery Electric Vehicle (BEV) with Traffic

Where to go from here

Information in this section

Basics on the Battery Electric Vehicle with Traffic Demo Model.....239
Gives you basic information about the Battery Electric Vehicle with Traffic Demo Model.

Overview of the Battery Electric Vehicle with Traffic Model.....240
Gives you an overview of the Battery Electric Vehicle with Traffic Model showing the ASM modules that are implemented in the model.

Basics on the Battery Electric Vehicle with Traffic Demo Model

Introduction

This topic gives you basic information about the Battery Electric Vehicle with Traffic Demo Model.

Basics

The **Battery Electric Vehicle with Traffic** model simulates the dynamics of a passenger car with traffic elements.

The model consists of the following components:

- All components of the **Battery Electric Vehicle** model.
- A **Traffic** subsystem.

The Traffic model simulates the movements of fellow vehicles and object detection sensors. It is located in the **Environment** block of the model.

It contains the following subsystems:

- **FellowMovement**
- **ObjectParameters**
- **Sensors**
- **GroundTruth**

For a detailed description of the Traffic model, refer to Traffic Library (ASM Traffic Reference 🕮).

Overview of the Battery Electric Vehicle with Traffic Model

Introduction

This topic gives you an overview of the Battery Electric Vehicle with Traffic Model showing the ASM modules that are implemented in the model.

Opening the model

Refer to How to Start with an ASM Demo Model via MATLAB (ASM Electric Components Model Description 🕮).

Top layer

The following illustration shows the top layer of the model:

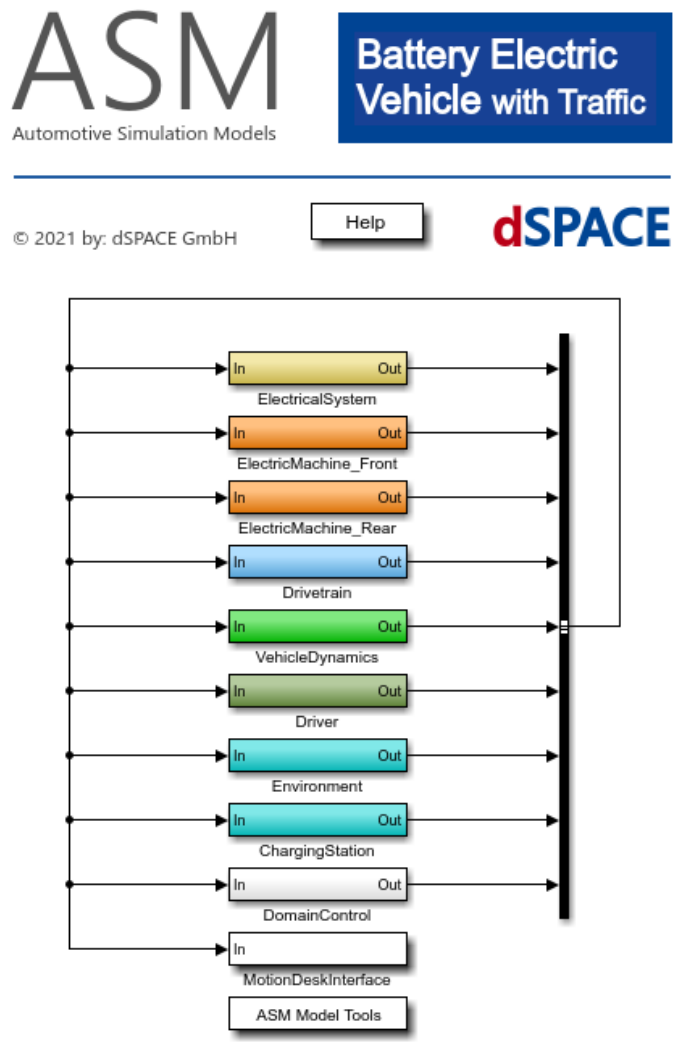

ASM modules

The model contains the following ASM modules:

- Electrical System Module on page 286
- Electric Machine Basic Module on page 284 as Electric Machine Front
- Electric Machine Basic Module on page 284 as Electric Machine Rear
- Drivetrain BEV Module on page 273
- Vehicle Dynamics Module on page 343
- Driver Module on page 260
- Environment Traffic Module on page 300
- Charging Station Module on page 259
- Start System Module on page 339
- Torque Manager Module on page 340
- Driver Assistance Module on page 265

Related topics

Basics

Battery Electric Vehicle (BEV)..... 248

Squirrel Cage Asynchronous Machine

Where to go from here

Information in this section

Basics on the Squirrel Cage Asynchronous Machine Demo Model.....242
Gives you basic information about the Squirrel Cage Asynchronous Machine Demo Model.

Overview of the Electric Drive Closed Loop SCIM Model.....242
Gives you an overview of the Electric Drive Closed Loop SCIM Model showing the ASM modules that are implemented in the model.

Basics on the Squirrel Cage Asynchronous Machine Demo Model

Introduction

This topic gives you basic information about the Squirrel Cage Asynchronous Machine Demo Model.

Basics

The Electric Drive Closed Loop SCIM model simulates the control of a squirrel cage induction machine (SCIM) including a controller, a three-phase power supply with a three-phase rectifier and DC link, an inverter, a motor, and the mechanics of an engine shaft.

Overview of the Electric Drive Closed Loop SCIM Model

Introduction

This topic gives you an overview of the Electric Drive Closed Loop SCIM Model showing the ASM modules that are implemented in the model.

Opening the Model

Refer to How to Start with an ASM Demo Model via MATLAB (ASM Electric Components Model Description 🕮).

Top layer

The following illustration shows the top layer of the model:

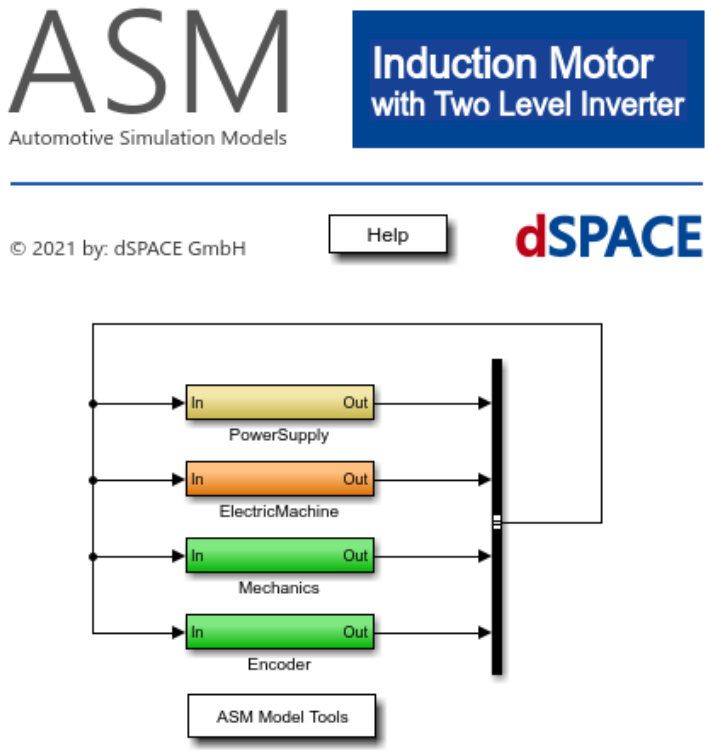

ASM modules

The model contains the following modules:

- Rectifier Module on page 334
- Electric Machine SCIM on page 285
- Mechanics Module on page 333
- Resolver Module on page 334

Brushless DC Machine

Where to go from here

Information in this section

Basics on the Electric Drive Closed Loop BLDC Demo Model.....244
Gives you basic information about the **Electric Drive Closed Loop BLDC** demo Model.

Overview of the Electric Drive Closed Loop BLDC Model.....244
Gives you an overview of the **Electric Drive Closed Loop BLDC** model showing the ASM modules that are implemented in the model.

Basics on the Electric Drive Closed Loop BLDC Demo Model

Introduction

This topic gives you basic information about the **Electric Drive Closed Loop BLDC** demo Model.

Basics

The **Electric Drive Closed Loop BLDC** model simulates the control of a brushless DC machine (BLDC), including a controller, a battery, an inverter, a motor, and the mechanics of an engine shaft.

Overview of the Electric Drive Closed Loop BLDC Model

Introduction

This topic gives you an overview of the **Electric Drive Closed Loop BLDC** model showing the ASM modules that are implemented in the model.

Opening the Model

Refer to How to Start with an ASM Demo Model via MATLAB (ASM Electric Components Model Description 🕮).

Top layer

The following illustration shows the top layer of the model:

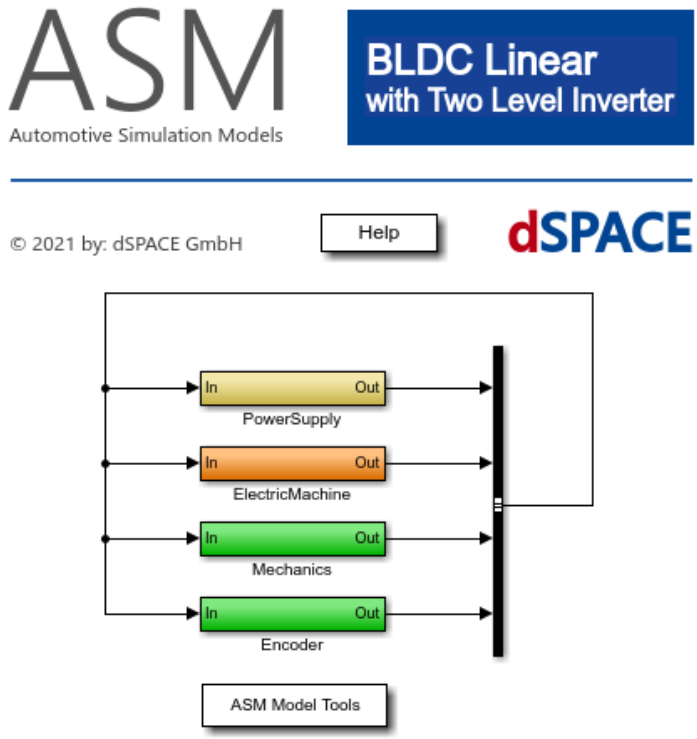

ASM modules

The model contains the following ASM modules:

- Battery Module on page 257
- Electric Machine (BLDC) Module on page 279
- Mechanics Module on page 333
- Hall Encoder Module on page 321

Permanent Magnet Synchronous Machine

Where to go from here

Information in this section

Basics on the Electric Drive closed Loop PMSM Nonlinear Demo Model 246
Gives you basic information about the **Electric Drive closed Loop PMSM Nonlinear** demo Model.

Overview of the Electric Drive closed Loop PMSM Nonlinear Model 246
Gives you an overview of the **Electric Drive closed Loop PMSM Nonlinear** Model showing the ASM modules that are implemented in the model.

Basics on the Electric Drive closed Loop PMSM Nonlinear Demo Model

Introduction

This topic gives you basic information about the **Electric Drive closed Loop PMSM Nonlinear** demo Model.

Basics

The **Electric Drive closed Loop PMSM Nonlinear** model simulates the control of a permanent magnet synchronous machine (PMSM), including the following parts:

- A controller
- A supercapacitor as the power supply
- An inverter
- A motor
- The mechanics of an engine shaft

Overview of the Electric Drive closed Loop PMSM Nonlinear Model

Introduction

This topic gives you an overview of the **Electric Drive closed Loop PMSM Nonlinear** Model showing the ASM modules that are implemented in the model.

Opening the Model

Refer to How to Start with an ASM Demo Model via MATLAB (ASM Electric Components Model Description 🕮).

Top layer

The following illustration shows the top layer of the model:

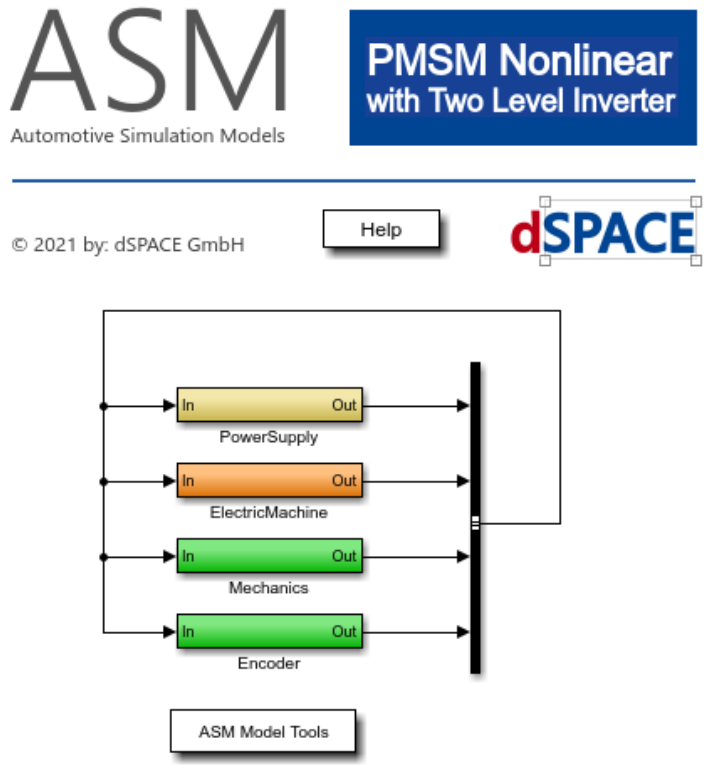

ASM modules

The model contains the following ASM modules:

- Supercapacitor Module on page 335
- Electric Machine (PMSM) Module on page 280
- Mechanics Module on page 333
- Resolver Module on page 334

Battery Electric Vehicle (BEV)

Where to go from here

Information in this section

Basics on the Battery Electric Vehicle Demo Model.....248
Gives you basic information about the Battery Electric Vehicle Demo Model.

Overview of the Battery Electric Vehicle Model.....249
Gives you an overview of the Battery Electric Vehicle Model showing the ASM modules that are implemented in the model.

Basics on the Battery Electric Vehicle Demo Model

Introduction

This topic gives you basic information about the Battery Electric Vehicle Demo Model.

Basics

The **Battery electric vehicle** (BEV) model simulates the dynamics of a passenger car.

The vehicle is composed of the following components:

- An energy storage system
- One electric drive for the front axle and one for the rear axle
- A drivetrain with flexible shafts
- A rigid vehicle body with four wheels
- A serial regenerative brake system
- An electric air conditioning
- A battery charging system with a charging station

The model represents the vehicle's longitudinal, lateral, and vertical dynamics. It simulates the following parts:

- A drivetrain
- Suspension kinematics and compliance
- Tire-road friction forces and moments
- Steering and brakes

Note

To run the BEV demo model, you must use the ASM Electric Components Library in combination with the ASM Vehicle Dynamics Library and the ASM Environment Library. Otherwise, there are Simulink blocks of the demo model which will have invalid links to the missing libraries.

Overview of the Battery Electric Vehicle Model

Introduction

This topic gives you an overview of the Battery Electric Vehicle Model showing the ASM modules that are implemented in the model.

Opening the Model

Refer to How to Start with an ASM Demo Model via MATLAB (ASM Electric Components Model Description 🕮).

Top layer

The following illustration shows you the top layer of the model:

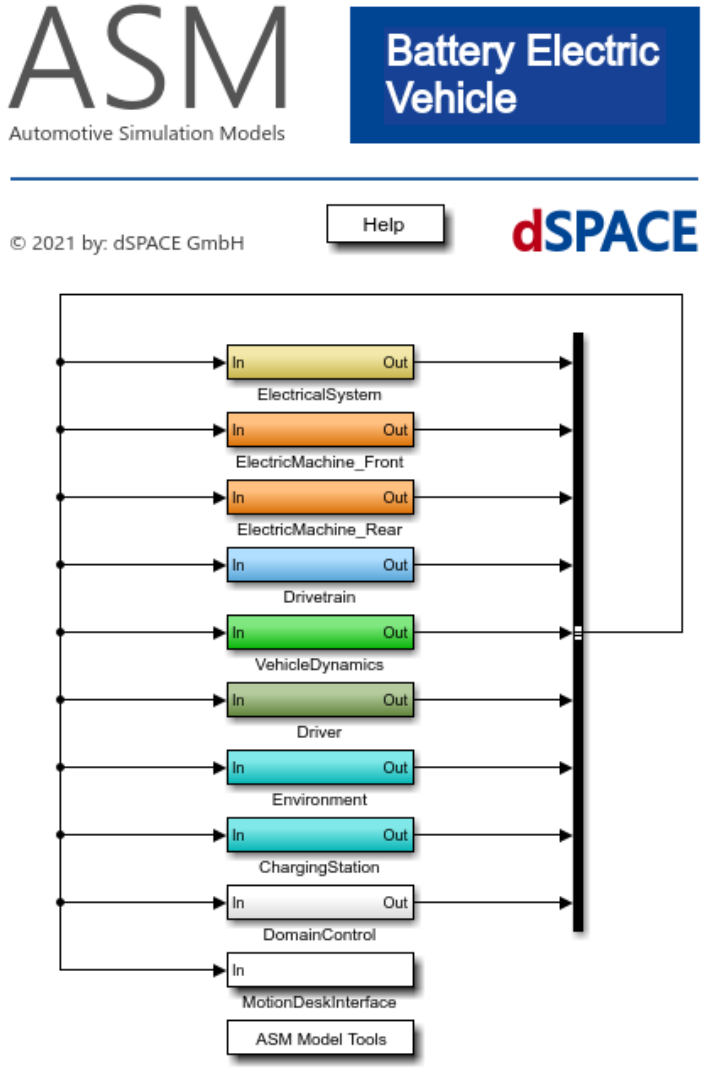

ASM modules

The model contains the following ASM modules:

- Electrical System Module on page 286
- Electric Machine Basic Module on page 284 as Electric Machine Rear
- Electric Machine Basic Module on page 284 as Electric Machine Front
- Drivetrain BEV Module on page 273
- Vehicle Dynamics Module on page 343
- Driver Module on page 260
- Environment Module on page 311
- Charging Station Module on page 259
- Start System Module on page 339

- Torque Manager Module on page 340
- Driver Assistance Simple Module on page 264

Permanent Magnet Synchronous Machine (PMSM) with 3-Level Inverter

Where to go from here

Information in this section

Basics on the Electric Drive closed Loop PMSM Linear with 3-Level Inverter Demo Model.....252
Gives you basic information about the Electric Drive closed Loop PMSM Linear with 3-Level Inverter demo Model.

Overview of the Electric Drive closed Loop PMSM Linear with 3-Level Inverter Model.....253
Gives you an overview of the Electric Drive closed Loop PMSM Linear with 3-Level Inverter Model showing the ASM modules that are implemented in the model.

Basics on the Electric Drive closed Loop PMSM Linear with 3-Level Inverter Demo Model

Introduction

This topic gives you basic information about the Electric Drive closed Loop PMSM Linear with 3-Level Inverter demo model.

Basics

The Electric Drive closed Loop PMSM Linear with 3-Level Inverter model simulates the control of a permanent magnet synchronous machine (PMSM), including the following parts:

- A controller
- A supercapacitor as the power supply
- A three-level inverter
- A motor
- The mechanics of an engine shaft

Overview of the Electric Drive closed Loop PMSM Linear with 3-Level Inverter Model

Introduction

This topic gives you an overview of the **Electric Drive closed Loop PMSM Linear with 3-Level Inverter** Model showing the ASM modules that are implemented in the model.

Opening the Model

Refer to How to Start with an ASM Demo Model via MATLAB (ASM Electric Components Model Description 🕮).

Top layer

The following illustration shows the top layer of the model:

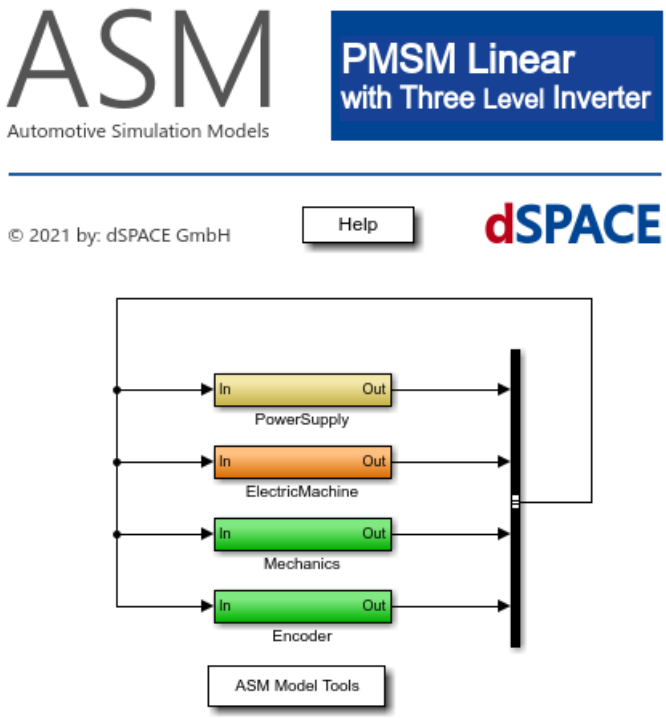

ASM modules

The model contains the following ASM modules:

- Supercapacitor (3LI) Module on page 337
- Electric Machine (PMSM 3LI) Module on page 282
- Mechanics Module on page 333
- Resolver Module on page 334

ASM Modules

Where to go from here

Information in this section

Alternator Module.....256
To simulate an alternator that must supply sufficient current to the vehicle's electrical system under all operating conditions.

Battery Module.....257
To model a standard low-voltage battery used as the power supply for the system.

Battery System Module.....258
To model a battery system with two battery models.

Charging Station Module.....259
To model the charging station of a DC charging system.

Crankshaft Module.....260
To model the engine shaft to simulate the effect of the different torques to the engine speed.

Driver Module.....260
To control the pedals, gear, and steering wheel in such a way that the vehicle follows given references and stays on the road.

Driver Assistance Simple Module.....264
To provide default values for Adaptive Cruise Control (ACC) signals.

Driver Assistance Module.....265
To model a soft ECU for an Adaptive Cruise Control (ACC).

Driver Basic Module.....267
To implement controlled longitudinal maneuvers, such as following a velocity profile.

Drivetrain Hybrid Basic Module.....270
To model a parallel hybrid drivetrain which transfers the torque from the internal combustion engine and the electric machine to the wheels.

Drivetrain BEV Module.....273
To simulate different drivetrain components, such as the shaft of the electric machines, the front and rear differential, and flexible drive shafts.

Drivetrain Hybrid Vehicle Module.....274
This module represents a parallel hybrid drivetrain which transfers the torque from the internal combustion engine and the electric machine to the wheels.

Electrical Loads Module.....278
To model different passive electrical circuits and automotive loads.

Electric Machine (BLDC) Module....279
To model a controller, an inverter and a machine model to simulate the control of a brushless DC machine (BLDC) with its typical trapezoidal shape function of the back EMF.

Electric Machine (PMSM) Module....280
To model an electric machine consisting of a controller, an inverter and a machine model to simulate the control of a permanent magnet synchronous machine (PMSM) with its typical sinusoidal shape function of the back EMF.

Electric Machine (PMSM 3LI) Module....282
To model an electric machine PMSM 3LI.

Electric Machine Basic Module....284
To simulate a simplified synchronous motor model with a current controller.

Electric Machine SCIM....285
This ASM module consists of a controller, an inverter and a machine model to simulate the control of a squirrel cage induction machine (SCIM).

Electrical System Module....286
To model an electrical system with different parts.

Engine Basic Module....289
To model an engine as a simple look-up table, where the engine torque is calculated as a function of engine speed and the driver accelerator pedal position.

Engine Gasoline Module....292
To implement a gasoline engine.

Environment Basic Module....298
To implement reference values to the driver and other model parts, for example to follow a reference velocity profile or an engine speed set.

Environment Traffic Module....300
To provide the environment for the vehicle model.

Environment Module....311
To model maneuver and road models.

Hall Encoder Module....321
To model a Hall encoder.

Torque Manager P2 Module....322
To implement a hybrid manager.

Mechanics Module....333
To simulate the mechanics of an engine inertia.

Rectifier Module....334
To model a three-phase power supply model and a three-phase rectifier as well as a DC link model used as the power supply for the system.

Resolver Module 334
To simulate the angular information or the position of an engine shaft.

Supercapacitor Module 335
To model a voltage controller and supercapacitor model.

Supercapacitor (3LI) Module 337
To model a voltage controller and supercapacitor model.

Starter Module 338
To simulate a starter as battery-driven DC motor for gearing up the engine to speeds at which it has to be cranked.

Start System Module 339
To implement a start system for switching the engine on and off.

Torque Manager Module 340
To model a torque manager.

Vehicle Dynamics Module 343
To implement a multibody system of a passenger car including tire, aerodynamics and suspension calculation.

Vehicle Dynamics Basic Module 351
To calculate the vehicle speed based on the traction and load torque from the external driving resistances.

Alternator Module

Description

This module simulates an alternator that must supply sufficient current to the vehicle's electrical system under all operating conditions to ensure that the state of charge in the energy storage device (battery) is consistently maintained at an adequate level. Refer to Alternator on page 168. You can set the voltage set point of the alternator in the constant blocks in the UserInterface.

The following tables show the external inports and outports of the ASM module.

Inports Plant

The following table shows the ports of the Interface_External_In:

Name	Unit	Description
n_Engine	[rpm]	Alternator speed
Reset	[0|1]	Reset integrators to their initial conditions
V_Bat	[V]	Battery voltage

Outports Plant

The following table shows the ports of the Interface_External_Out:

Name	Unit	Description
I_Alternator	[A]	Alternator current
Trq_Alternator	[Nm]	Alternator torque

Battery Module

Description

This ASM module consists of a battery model which is a standard low-voltage battery (Battery on page 176). Here, it is used as the power supply for the system.

The following tables show the external inports and outports of the ASM module.

Inports Plant

The following table shows the ports of the Interface_External_In:

Name	Unit	Description
Ctrl_mode_SW	[1|2|3|4]	Switch between the control modes: ▪ 1: Speed control ▪ 2: Current control ▪ 3: Voltage control ▪ 4: Torque control
I_DCLink	[A]	DC Link current
Reset	[0|1]	Reset integrators to their initial conditions

Outports Plant

The following table shows the ports of the Interface_External_Out:

Name	Unit	Description
V_DCLink	[V]	DC Link voltage

Battery System Module

Description

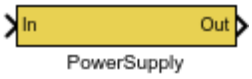

The battery system includes two battery models:

- A standard low-voltage battery that represents the lead-acid starter battery (Battery on page 176) used as power supply for the starter and low voltage loads. The low voltage battery is charged by the alternator.
- The other battery consists out of two multicell high voltage lithium ion batteries (Battery Multicell on page 184) connected in parallel circuit (Parallel Circuit Current Split on page 195) used as the power supply for high-voltage loads, such as the air conditioning compressor. The dynamic loss voltage of each high voltage battery is simulated with three external RC circuits (RC Battery on page 198).

The following tables show the external inports and outports of the ASM module.

Inports Plant

The following table shows the ports of the Interface_External_In:

Name	Unit	Description
I_Alternator	[A]	Alternator current
I_Load_HV	[A]	Load current high voltage system
I_Load_LV	[A]	Load current low voltage system
I_Starter	[A]	Starter current
Reset	[0|1]	Reset integrators to their initial conditions
T_Ambient	[°C]	Ambient temperature

Outports Plant

The following table shows the ports of the Interface_External_Out:

Name	Unit	Description
V_Bat_HV	[A]	Voltage of high voltage battery
V_Bat_LV	[A]	Voltage of low voltage battery
V_DCLink	[V]	DC Link voltage

Charging Station Module

Description

This ASM module includes the charging station model of a DC charging system. The charging station controller receives a battery charging current demand from the vehicle and calculates a desired DC charging voltage to deliver the requested current (Soft ECU Charging Station on page 129. The desired voltage is used for the power electronics model to deliver the charging station output voltage.

Refer to Overview of the Soft ECU Battery Charging on page 127 for an overview of the soft ECU battery charging.

The following tables show the external in- and outports of the ASM module.

Inports Control

The following table shows the ports of the Interface_External_In:

Name	Unit	Description
I_Bat_Charge_Actual	[A]	Battery charging current
I_Req	[A]	Current request
Reset	[0|1]	Reset integrators to their initial conditions
V_Bat	[V]	Battery voltage
V_Req	[V]	Voltage request

The following table shows the interface to connect an external ECU (real ECU):

Name	Unit	Description
I_DC_Desired	[A]	Desired DC current
V_DC_Desired	[V]	Desired DC voltage

Outports Plant

The following table shows the ports of the Interface_External_Out:

Name	Unit	Description
I_DC	[A]	DC current
V_DC	[V]	DC voltage

Related topics

References

Overview of the Soft ECU Battery Charging..... 127
Soft ECU Charging Station..... 129

Crankshaft Module

Description

This ASM module represents the engine shaft (Engine Inertia on page 147) to simulate the effect of the different torques to the engine speed. The respective torques from the electric components are the starter and alternator torques. The engine torque is simulated by a simple PI controller that delivers a torque to drive the engine with idle speed.

The following tables show the external inports and outports of the ASM module.

Inports Plant

The following table shows the ports of the `Interface_External_In`:

Name	Unit	Description
Inertia_Starter	[kg m^2]	Starter inertia
Trq_Alternator	[Nm]	Alternator torque
Trq_Starter	[Nm]	Starter torque

Outports Plant

The following table shows the ports of the Interface_External_Out:

Name	Unit	Description
n_Engine	[rpm]	Speed of combustion engine
Reset	[0|1]	Reset integrators to their initial conditions

Driver Module

Description

The driver model is essential for controlled maneuvers. It controls the pedals, gear, and steering wheel in such a way that the vehicle follows given references and stays on the road. The driver plans the cruising speed for a given road and can navigate safely through the curves by controlling the pedals in such a way that given dynamics limits are not exceeded. It is also possible to incorporate the model with different stimulus signals, such as stimulating the gear and clutch while following reference velocity.

The following tables show the external inports and outports of the ASM module.

Subsystems

The module contains the following subsystems:

- Lateral Controller Subsystem on page 354
- Longitudinal Controller Subsystem on page 356
- Reference Velocity Subsystem on page 358

Inports Plant

The following table shows the ports of the Interface_External_In:

Name	Unit	Description
a_x_Max	[m/s^2]	Maximum longitudinal acceleration for reference velocity calculation
a_x_Min	[m/s^2]	Minimum longitudinal acceleration for reference velocity calculation
a_x_Vehicle_Ref_TrafficDriver	[m/s^2]	Reference acceleration of the ASM vehicle by the traffic driver feature
a_y_Max	[m/s^2]	Maximum lateral acceleration (for velocity calculation in curves)
Angle_SteeringWheel_Maneuver	[deg]	Steering wheel angle stimulus from maneuver scheduler
Angle_Yaw_Veh_Road	[deg]	Yaw angle of the reference line of the road at the current position of the ASM vehicle
Angle_Yaw_Vehicle_CoorSys_E	[deg]	Vehicle yaw angle
CorneringStiffness_Tire_Front	[N/rad]	Cornering stiffness of front tires
CorneringStiffness_Tire_Rear	[N/rad]	Cornering stiffness of rear tires
Curv_Preview_Road	[1/m]	Road curvature at previewed road positions
Curv_Veh_Road	[1/m]	Curvature of the road at the vehicle position
Dist_Border_Left	[m]	Distance from the ASM vehicle reference coordinate system to the left road border
Dist_Border_Right	[m]	Distance from the ASM vehicle reference coordinate system to the right road border
Enable_v_Init	[0|1]	Flag that indicates if the ASM vehicle simulation has a velocity different from zero
F_Driving_Res	[N]	Sum of driving resistances acting on the vehicle
Gear_Maneuver	[]	Gear stimulus from maneuver
Gear_Max	[0|1_n]	Gear setpoint defined by maneuver input ▪ 0: Off ▪ 1_n: Gear setpoint
i_Steering_Mean	[]	Mean value of steering gear ratio
Inertia_z_Vehicle_Total	[kg m^2]	Vehicle inertia around z axis
m_Total_Vehicle	[kg]	Total vehicle mass
Mode_AcceleratorBrake	[1|2]	Controls whether the accelerator and brake pedal positions are stimulus signals or controlled by the driver: ▪ 1: Stimulus ▪ 2: Driver

Name	Unit	Description
Mode_AdaptVelocityToRoad	[1|2]	Controls whether the reference velocity calculation on roads is active: ▪ 1: Off ▪ 2: On
Mode_CurvatureCalculation	[1|2]	Specifies the curvature calculation mode: ▪ 1: Road ▪ 2: Driver
Mode_ForceToRoad	[1|2]	Controls the limitation to valid lane indices: ▪ 1: Off ▪ 2: On
Mode_GearClutch	[1|2|3|4]	Switch for mode signal of the gear and clutch pedal source: ▪ 1: Stimulus ▪ 2: Driver ▪ 3: Open clutch ▪ 4: Reference gear
Mode_LatCtrl	[1|2]	Lateral control type: ▪ 1: Pos ▪ 2: Yaw
Mode_SelectorLever	[1|2]	Switch for mode signal of the selector lever source: ▪ 1: Stimulus ▪ 2: Driver
Mode_Steer	[1|2|3]	Controls whether the steering wheel angle is controlled by a stimulus signal or by driver: ▪ 1: Stimulus ▪ 2: Driver ▪ 3: Fix
Mode_TrafficDriver	[1|2]	Controls the Traffic Driver mode of the ASM vehicle: ▪ 1: Off ▪ 2: On
Mode_Transmission	[1|2]	Transmission mode switch ▪ 1: Manual ▪ 2: Automatic
n_Engine	[rpm]	Speed of combustion engine
n_Engine_Idle_Set	[rpm]	Setpoint for idle speed of combustion engine
omega_Out_Trm	[rad/s]	Transmission output speed
Pitch_Preview_Road	[deg]	Pitch angle of the road at the positions of the preview points
Pos_AccPedal_Maneuver	[%]	Accelerator pedal position stimulus from maneuver scheduler
Pos_BrakePedal_Maneuver	[%]	Brake pedal position stimulus from maneuver scheduler
Pos_ClutchPedal_Maneuver	[%]	Clutch pedal position stimulus from maneuver scheduler
Pos_x_CoG_Vehicle_Total	[m]	x-element of position vector of vehicle centre of gravity
Pos_x_Preview_DriverCurv	[m]	x-positions of the preview points in the earth coordinate system taken for the curvature for the reference velocity calculation

Name	Unit	Description
Pos_x_Preview_Road	[m]	Vector of previewed road positions in x direction (earth coordinates)
Pos_x_Ref_Vehicle_Road	[m]	x-position of the reference line of the road at the current position of the vehicle
Pos_x_Vehicle_CoorSys_E	[m]	X vehicle position
Pos_y_Preview_DriverCurv	[m]	y-positions of the preview points in the earth coordinate system taken for curvature for the reference velocity calculation
Pos_y_Preview_Road	[m]	Vector of previewed road positions in y direction (earth coordinates)
Pos_y_Ref_Vehicle_Road	[m]	y-position of the reference line of the road at the current position of the vehicle
Pos_y_Vehicle_CoorSys_E	[m]	Y vehicle position
Pos_z_Preview_Road	[m]	Vector of the previewed road positions in the z-direction (earth coordinates)
Reset_States	[0|1]	Reset states
Roll_Preview_Road	[deg]	Roll angle of the road at the positions of the preview points
Route_Direction_Init	[]	Direction on the route for the all fellow vehicles
s_Total_Vehicle_Road	[m]	The total distance along the route
s_Vehicle_Init	[m]	Initial distance s along the road
SelectorLever_Maneuver	[-3|-2|-1|0|1]	Selector lever position from maneuver: ▪ -3: TipShift ▪ -2: Park ▪ -1: Reverse ▪ 0: Neutral ▪ 1: Drive
Speed_Limit_Preview_Road	[km/h]	Speed limit as defined in the scenery section of the road element at the position of the ASM vehicle
State_Engine	[0|1|2|3|4]	Engine state ▪ 0: Engine off ▪ 1: Ignition on ▪ 2: Ignition on and starter activated ▪ 3: Engine is running ▪ 4: Ignition is switched off, shutdown active
State_StartStop	[1|2|3|4]	Start-stop state: ▪ 1: Off ▪ 2: Not ready ▪ 3: Ready to stop the engine ▪ 4: Engine actively stopped by the system
Sw_LatDriver	[1|2]	Controls whether lateral_control1 or lateral_control2 is active: ▪ 1: Lateral_control 1 active ▪ 2: Lateral_control 2 active
v_Vehicle_Preview_Ref_Maneuver	[m/s]	Reference signal for preview speed calculation
v_Vehicle_Ref_Maneuver	[m/s]	Vehicle reference velocity provided by maneuver

Name	Unit	Description
v_x_Vehicle_CoG	[km/h]	Longitudinal vehicle velocity
v_y_Vehicle_CoG	[km/h]	Lateral vehicle velocity at centre of gravity
Width_Deadzone_LatCtrl	[m]	Width of the dead zone for the lateral deviation from theroad reference line
YawRate_Vehicle	[deg/s]	Vehicle yaw rate

Outports Plant

The following table shows the ports of the Interface_External_Out:

Name	Unit	Description
Angle_SteeringWheel	[deg]	Steering wheel angle
Gear	[]	Gear
Pos_AccPedal	[%]	Position of the accelerator pedal
Pos_BrakePedal	[%]	Brake pedal position
Pos_ClutchPedal	[%]	Clutch pedal position
s_Preview	[m]	Vector with preview distances for the lateral control and vehicle reference velocity calculation.
SelectorLever	[-3|-2|-1|0|1]	Selector lever position: ▪ -3: TipShift ▪ -2: Park ▪ -1: Reverse ▪ 0: Neutral ▪ 1: Drive
t_Preview_vRef_Driver	[s]	Preview time for the driver model

Driver Assistance Simple Module

Description

This module provides default values for adaptive cruise control (ACC) signals.

The following tables show the external inports and outports of the ASM module.

Outports Control

The following table shows the ports of the Interface_External_Out:

Name	Unit	Description
AEB	[0|1]	Autonomous emergency brake flag from soft ecu ACC

Name	Unit	Description
Enable_Trq_Decrease_ACC	[0|1]	Enable torque decrease ACC
Enable_Trq_Increase_ACC	[0|1]	Enable torque increase ACC
FCW	[0|1]	Forward collision warning flag from soft ecu ACC
Trq_DecreaseRequest_ACC	[Nm]	Torque decrease request ACC
Trq_IncreaseRequest_ACC	[Nm]	Torque increase request ACC

Driver Assistance Module

Description

This module includes a soft ECU for an Adaptive Cruise Control (ACC). With this module, you can simulate the behaviour of an ACC to take control of the ego-vehicle by keeping desired input values such as the speed or distance in reference to a leading vehicle.

The following tables show the external inports and outports of the ASM module.

Subsystems

The module contains the following subsystems:

- Soft ECU ACC Subsystem on page 359

Inports Control

The following table shows the ports of the Interface_External_In:

Name	Unit	Description
Angle_Hor_Rel_Fellows	[deg]	Horizontal angle of detected fellow vehicle
Coef_RollingRes	[FL;FR;RL;RR][]	Rolling resistance coefficient
Cw_x	[]	Longitudinal aerodynamics coefficients
d_Total_Fellows	[m]	Lateral fellow vehicle position on the road. This signal is required to ensure hold functionality.
d_Vehicle_Road	[m]	Lateral distance of the vehicle regarding the preferred lane
Dist_Fellows	[m]	Distance to fellow vehicle, detected by sensor
ECU_Commands	[]	ECU commands derived from the customized maneuver user signals

Name	Unit	Description
Height_Fellows	[m]	Height of the fellow vehicles
i_FinalDrive	[]	Total transmission ratio of final driveline (between transmission output and wheel speed
i_unsync_Trm	[]	Unsynchronized transmission ratio
Length_Fellows	[m]	Length of fellow vehicles
m_TotalVehicle	[kg]	Total vehicle mass
Object_ID	[]	Object ID of the detected object
Pos_AccPedal	[%]	Position of the accelerator pedal
Pos_BrakePedal	[%]	Brake pedal position
Pos_FL_Wheel	[x;y;z][m]	Front left wheel position
Pos_FR_Wheel	[x;y;z][m]	Front right wheel position
PosVec_MainPnt_Fellows	[x;y;z][m]	Vector with fellow vehicle main point position
r_Dyn_Tire	[FL;FR;RL;RR][m]	Dynamic tire radius
Reset	[0|1]	Reset integrators to their initial conditions
s_Fellows_Ref	[m]	Distance s along the route for all traffic fellows
s_Vehicle_Road	[m]	The distance s along the route at the position of the vehicle. Reset to zero after each turn on a closed route
Slope_Veh_Road	[%]	Slope of the road at the current distance s of the vehicle
Trq_Fric_Engine	[Nm]	Friction torque of engine
v_Rel_Fellows	[m/s]	Fellow velocity relative to the ASM vehicle velocity
v_Vehicle	[km/h]	Vehicle velocity
v_x_Vehicle_CoG	[km/h]	Longitudinal vehicle velocity
YawRate_Vehicle_CoG	[deg/s]	Vehicle yaw rate
Width_Fellows	[m]	Width of the fellow vehicles

The following table shows the interface to connect an external ECU (real ECU):

Name	Unit	Description
AEB	[0|1]	Autonomous emergency brake flag from the soft ECU ACC
Enable_Trq_Decrease_ACC	[0|1]	Enable torque decrease ACC
Enable_Trq_Increase_ACC	[0|1]	Enable torque increase ACC
FCW	[0|1]	Forward collision warning flag from soft ECU ACC

Name	Unit	Description
Trq_DecreaseRequest_ACC	[Nm]	Torque decrease request ACC
Trq_IncreaseRequest_ACC	[Nm]	Torque increase request ACC

Outports Control

The following table shows the ports of the Interface_External_Out:

Name	Unit	Description
AEB	[0|1]	Autonomous emergency brake flag from soft ECU ACC
Enable_Trq_Decrease_ACC	[0|1]	Enable torque decrease ACC
Enable_Trq_Increase_ACC	[0|1]	Enable torque increase ACC
FCW	[0|1]	Forward collision warning flag from soft ECU ACC
Trq_DecreaseRequest_ACC	[Nm]	Torque decrease request ACC
Trq_IncreaseRequest_ACC	[Nm]	Torque increase request ACC

Animation

The following table shows the ports of the Animation:

Name	Unit	Description
Dist_Long	[m]	Longitudinal distance to target vehicle
Distance_Set	[m]	Desired distance to target vehicle
State_ACC	[0|1]	State of the ACC: ▪ 0: Off ▪ 1: On
Target_Detected	[0|1]	Flag that indicates that a target is detected
v_Set	[km/h]	Desired velocity for the ACC

Driver Basic Module

Description

The Driver module is essential for controlled longitudinal maneuvers, such as following a velocity profile (driving cycle). It controls the pedals and gear in such a way that the vehicle follows given references.

The following tables show the external inports and outports of the ASM module.

Subsystems

- Driver Subsystem on page 362

Inports Plant

The following table shows the ports of the Interface_External_In:

Name	Unit	Description
Enable_v_Vehicle_Init	[0|1]	Drivetrain initialization flag for scenarios with non-zero vehicle initial velocity
F_Driving_Res	[N]	Sum of driving resistances acting on the vehicle
Gear_Maneuver	[]	Gear stimulus from the maneuver
Gear_Max	[0|1_n]	Gear setpoint defined by the maneuver input ▪ 0: Off ▪ 1_n: Gear setpoint
m_Total_Vehicle	[kg]	Total vehicle mass
Mode_AcceleratorBrake	[1|2]	Controls whether the accelerator and brake pedal positions are stimulus signals or controlled by the driver: ▪ 1: Stimulus ▪ 2: Driver
Mode_GearClutch	[1|2|3|4]	Switch for the mode signal of the gear and clutch pedal source: ▪ 1: Stimulus ▪ 2: Driver ▪ 3: Open clutch ▪ 4: Reference gear
Mode_SelectorLever	[1|2]	Switch for the mode signal of the selector lever source ▪ 1: Stimulus ▪ 2: Driver
Mode_Transmission	[1|2]	Transmission mode switch ▪ 1: Manual ▪ 2: Automatic
n_Engine	[rpm]	Speed of the combustion engine
n_Engine_Idle_Set	[rpm]	Set point for the idle speed of combustion engine
omega_In_Diff	[rad/s]	Differential input speed
Pos_AccPedal_Maneuver	[%]	Accelerator pedal position stimulus from the maneuver scheduler
Pos_BrakePedal_Maneuver	[%]	Brake pedal position stimulus from the maneuver scheduler

Name	Unit	Description
Pos_ClutchPedal_Maneuver	[%]	Clutch pedal position stimulus from the maneuver scheduler
Reset_States	[0|1]	Reset states
SelectorLever_Maneuver	[-3|-2|-1|0|1]	Selector lever position from the maneuver: ▪ -3: TipShift ▪ -2: Park ▪ -1: Reverse ▪ 0: Neutral ▪ 1: Drive
State_Engine	[0|1|2|3|4]	Engine state ▪ 0: Engine off ▪ 1: Ignition on ▪ 2: Ignition on and starter activated ▪ 3: Engine is running ▪ 4: Ignition is switched off, shutdown active
State_StartStop	[1|2|3|4]	Start-stop state: ▪ 1: Off ▪ 2: Not ready ▪ 3: Ready to stop the engine ▪ 4: Engine actively stopped by the system
Sw_Testbench	[0|1]	Switch to activate the test bench: ▪ 0: Off ▪ 1: On
Sw_TorqueController	[0|1]	Switch to activate the torque controller: ▪ 0: Off ▪ 1: On
v_Vehicle	[m/s]	Vehicle velocity
v_Vehicle_Preview_Ref	[km/h]	Preview reference vehicle velocity
v_Vehicle_Ref	[km/h]	Reference vehicle velocity

Outports Plant

The following table shows the ports of the Interface_External_Out:

Name	Unit	Description
Gear	[]	Gear
Pos_AccPedal	[%]	Position of the accelerator pedal
Pos_BrakePedal	[%]	Brake pedal position
Pos_ClutchPedal	[%]	Clutch pedal position

Name	Unit	Description
SelectorLever	[-3|-2|-1|0|1]	Selector lever position ▪ -3: TipShift ▪ -2: Park ▪ -1: Reverse ▪ 0: Neutral ▪ 1: Drive
t_Preview_vRef_Driver	[s]	Preview time for the driver model

Drivetrain Hybrid Basic Module

Description

The module represents a parallel hybrid drivetrain that transfers the torque from the internal combustion engine and the electric machine to the wheels. The parallel hybrid drivetrain simulates different drivetrain components such as a crankshaft, a clutch between the internal combustion engine (ICE) and the shaft of the electric machine, the shaft of the electric machine, a clutch between the shaft of the electric machine and an automatic transmission, differentials, and rigid drive shafts.

The following tables show the external inports and outports of the ASM module.

Inports Control

The following table shows the ports of the Interface_External_In:

Name	Unit	Description
Gear_Maneuver	[]	Gear stimulus from the maneuver
Gear_Max	[0Off|1_n]	Gear set point defined by the maneuver input
Mode_GearClutch	[1|2|3|4]	Switch for the mode signal of the gear and clutch pedal source ▪ 1: Stimulus ▪ 2: Driver ▪ 3: Open clutch ▪ 4: Reference gear
Pos_AccPedal	[%]	Position of the accelerator pedal
Pos_ClutchPedal_Maneuver	[%]	Clutch pedal position
Reset_States	[0|1]	Reset states
SelectorLever	[-3|-2|-1|0|1]	Selector lever position: ▪ -3: TipShift ▪ -2: Park

Name	Unit	Description
		▪ -1: Reverse ▪ 0: Neutral ▪ 1: Drive
State_Engine	[0|1|2|3|4]	Engine state: ▪ 0: Engine off ▪ 1: Ignition on ▪ 2: Ignition on and starter activated ▪ 3: Engine is running ▪ 4: Ignition is switched off, shutdown active
State_StartStop	[1|2|3|4]	Start-stop state: ▪ 1: Off ▪ 2: Not ready ▪ 3: Ready to stop the engine ▪ 4: Engine actively stopped by the system
Sw_DriveMode	[0|1|2]	Drive mode: ▪ 0: Hybrid ▪ 1: ICE only ▪ 2: EM only
Sw_TipShift	[-1|0|1]	TipShift request signal: ▪ -1: Down shift ▪ 0: Off ▪ 1: Up shift

The following table shows the interface to connect an external ECU (real ECU):

Name	Unit	Description
Ctrl_Parking_Pawl	[0|1]	Parking pawl control signal
Gear	[]	Gear
Pos_AccPedal	[%]	Position of the accelerator pedal
Pos_ClutchPedal	[%]	Clutch pedal position

Outports Control

The following table shows the ports of the Interface_External_Out:

Name	Unit	Description
Ctrl_Parking_Pawl	[0|1]	Parking pawl control signal
Factor_Trq_Engine_Red	[%]	Engine torque reduction factor
Pos_AccPedal_AMT	[%]	Controlled accelerator pedal position for automated manual transmission
Pos_ClutchPedal_AMT	[%]	Controlled clutch pedal position for automated manual transmission

Inports Plant

The following table shows the ports of the Interface_External_In:

Name	Unit	Description
CrankAngle_Cyl	[aTDC]	Crank angle per cylinder, positive value is after TDC
HybridMode_Vehicle	[0|1|2|3|4|5]	Hybrid mode of vehicle: ▪ 0: LPShift ▪ 1: ICE ▪ 2: Boost ▪ 3: EC ▪ 4: Recuperation ▪ 5: Error
n_Engine_Set	[rpm]	Setpoint for the speed of the combustion engine
Pos_Clutch_ICE_EM	[%]	Position clutch between ICE and EM
omega_Wheel	[rad|s]	Wheel speed
Pos_Clutch_ICE_Trm	[%]	Position of clutch between the internal combustion engine and transmission
Reset_States	[0|1]	Reset states
Sw_Testbench	[0|1]	Switch to activate the test bench: ▪ 0: Off ▪ 1: On
Trq_EM	[Nm]	Torque EM
Trq_MeanEff_Engine_Mod	[Nm]	Mean effective engine torque (modulated)

Outports Plant

The following table shows the ports of the Interface_External_Out:

Name	Unit	Description
Gear	[]	Gear
i_FinalDrive	[]	Total transmission ratio of final driveline (between transmission output and wheel speed
i_unsync_Trm	[]	Unsynchronized transmission ratio
Inertia_Out_Diff	[kg m^2]	Inertia reduced to the differential output shaft
Mode_Transmission	[1|2]	Transmission mode switch: ▪ 1: Manual ▪ 2: Automatic
n_EM	[rpm]	Speed of the electric machine
n_Engine	[rpm]	Speed of combustion engine
omega_EM	[rad/s]	EM speed in rad/s
omega_In_Diff	[rad/s]	Differential input speed

Name	Unit	Description
omega_In_Trm	[rad/s]	Transmission input Speed
Sw_CrankShaft_Reset	[0|1]	Crankshaft reset switch: ▪ 0: Disabled ▪ 1: Enabled
Trq_BSG	[Nm]	Torque of the belt-driven starter generator (BSG)
Trq_Out_Diff	[Nm]	Differential output torque

Drivetrain BEV Module

Description

The drivetrain transfers the torque from the electric machines to the wheels. It simulates different drivetrain components, such as the shaft of the electric machines, the front and rear differential, and flexible drive shafts. One electric machine is connected to the front and the other to the rear differential. The static transmission ratio between electric machine and the drive shafts is implemented by the main reduction gear ratio of the differential. The drivetrain model can be switched to simulate front-, rear-, or four-wheel drive. Depending on this switch, the electric machine front and rear are activated or deactivated.

The following tables show the external inports and outports of the ASM module.

Inports Plant

The following table shows the ports of the Interface_External_In:

Name	Unit	Description
Ctrl_Parking_Pawl	[0|1]	Parking pawl control signal
omega_Wheel	[FL,FR,RL,RR][rad|s]	Wheel speed
Reset_VehicleStates	[0|1]	Reset signal from the maneuver scheduler
Trq_EM_Front	[Nm]	Torque EM front
Trq_EM_Rear	[Nm]	Torque EM rear

Outports Plant

The following table shows the ports of the Interface_External_Out:

Name	Unit	Description
Gear	[]	Gear
i_FinalDrive	[]	Total transmission ratio of final driveline (between transmission output and wheel speed
i_FinalDrive_Front	[]	Final gear ratio of the the front-wheel drive
i_FinalDrive_Rear	[]	Final gear ratio of the rear-wheel drive
i_unsync_Trm	[]	Unsynchronized transmission ratio
Mode_Drivetrain	[1|2|3|4|5]	Drivetrain mode
Mode_Transmission	[1|2]	Transmission mode switch: ▪ 1: Manual ▪ 2: Automatic
n_Engine	[rpm]	Speed of combustion engine
omega_EM_Front	[rad/s]	Front EM speed
omega_EM_Rear	[rad/s]	Rear EM speed
omega_Out_Trm	[rad/s]	Transmission output speed
Sw_CrankShaft_Reset	[0|1]	Crankshaft reset switch: ▪ 0: Disabled ▪ 1: Enabled
Trq_BSG	[Nm]	Torque of the belt-driven starter generator (BSG)
Trq_Shaft	[FL;FR;RL;RR][Nm]	Torque of the output shaft

Animation

The following table shows the ports of the Animation:

Name	Unit	Description
Gear	[]	Gear
n_Engine	[rpm]	Speed of combustion engine

Drivetrain Hybrid Vehicle Module

Description

This module represents a parallel hybrid drivetrain that transfers the torque from the internal combustion engine and the electric machine to the wheels. It simulates different drivetrain components such as a crankshaft, a clutch between the internal combustion engine (ICE) and the shaft of the electric machine, the shaft of the electric machine, a clutch between the shaft of the electric machine and an automatic transmission, differentials, and rigid drive shafts.

The following tables show the external inports and outports of the ASM module.

Inports Control

The following table shows the ports of the Interface_External_In:

Name	Unit	Description
Enable_v_Init	[0|1]	Flag that indicates if the ASM vehicle simulation has a velocity different from zero
Gear_Maneuver	[]	Gear stimulus from the maneuver
Gear_Max	[]	Gear setpoint defined by maneuver input
Mode_GearClutch	[1|2|3|4]	Switch for the mode signal of the gear and clutch pedal source: ▪ 1: Stimulus ▪ 2: Soft ECU ▪ 3: Open clutch ▪ 4: Reference gear
Pos_AccPedal	[%]	Position of the accelerator pedal
Pos_ClutchPedal_Maneuver	[%]	Clutch pedal position stimulus from the maneuver scheduler
Reset_VehicleStates	[0|1]	Reset signal from the maneuver scheduler
SelectorLever	[-3|-2|-1|0|1]	Selector lever position: ▪ -3: TipShift ▪ -2: Park ▪ -1: Reverse ▪ 0: Neutral ▪ 1: Drive
State_Engine	[0|1|2|3|4]	Engine state: ▪ 0: Engine off ▪ 1: Ignition on ▪ 2: Ignition on and starter activated ▪ 3: Engine is running ▪ 4: Ignition is switched off, shutdown active
Sw_TipShift	[-1|0|1]	(-1: Down shift, 0: Off, 1: Up shift) TipShift request signal: ▪ -1: Downshift ▪ 0: Off

Name	Unit	Description
		▪ 1: Upshift

The following table shows the interface to connect an external ECU (real ECU):

Name	Unit	Description
Ctrl_CentralDiff	[0_1]	Lockup control signal of the central differential
Ctrl_FrontDiff	[0_1]	Lockup control signal of the front differential
Ctrl_Parking_Pawl	[0|1]	Parking pawl control signal
Ctrl_RearDiff	[0_1]	Lockup control signal of the rear differential
Factor_Trq_Engine_Red	[%]	Engine torque reduction factor
Gear	[]	Gear
Pos_AccPedal_AMT	[%]	Controlled accelerator pedal position for the automated manual transmission
Pos_ClutchPedal_AMT	[%]	Controlled clutch pedal position for the automated manual transmission

Outports Control

The following table shows the ports of the Interface_External_Out:

Name	Unit	Description
Factor_Trq_Engine_Red	[%]	Engine torque reduction factor
Pos_AccPedal_AMT	[%]	Controlled accelerator pedal position for an automated manual transmission
Pos_ClutchPedal_AMT	[%]	Controlled clutch pedal position for an automated manual transmission

Inports Plant

The following table shows the ports of the Interface_External_In:

Name	Unit	Description
CrankAngle_Cyl	[aTDC]	Crank angle per cylinder, positive value is after TDC
Enable_v_Init	[0|1]	Flag that indicates if the ASM vehicle simulation has a velocity different from zero
n_Engine_Set	[rpm]	Setpoint for the speed of the combustion engine
omega_Wheel	[FL,FR,RL,RR][rad|s]	Wheel speed
Pos_Clutch_EM_Trm	[%]	Position of the clutch between EM and transmission
Pos_Clutch_ICE_EM	[%]	Position clutch between ICE and EM
Reset_States	[0|1]	Reset states

Name	Unit	Description
Sw_Testbench	[0|1]	Switch to activate the test bench: ▪ 0: Off ▪ 1: On
Trq_EM	[Nm]	Torque EM
Trq_ICE	[Nm]	Torque of the internal combustion engine

Outports Plant

The following table shows the ports of the Interface_External_Out:

Name	Unit	Description
Gear	[]	Gear
i_FinalDrive	[]	Total transmission ratio of the final driveline (between transmission output and wheel speed
i_unsync_Trm	[]	Unsynchronized transmission ratio
Mode_Drivetrain	[1|2|3|4|5]	Drivetrain mode: ▪ 1: AWD ▪ 2: FWD ▪ 3: RWD ▪ 4: FF-4WD ▪ 5: FF
Mode_Transmission	[1|2]	Transmission mode switch: ▪ 1: Manual ▪ 2: Automatic
n_EM	[rpm]	Speed of the electric machine
n_Engine	[rpm]	Speed of combustion engine
omega_EM	[rad/s]	EM speed in rad/s
omega_In_Trm	[rad/s]	Transmission input speed
omega_Out_Trm	[rad/s]	Transmission output speed
Sw_CrankShaft_Reset	[0|1]	Crankshaft reset switch: ▪ 0: Disabled ▪ 1: Enabled
Trq_BSG	[Nm]	Torque of the belt-driven starter generator (BSG)
Trq_Shaft	[FL;FR;RL;RR][Nm]	Torque of the output shaft

Animation

The following table shows the ports of the Animation:

Name	Unit	Description
Gear	[]	Gear
n_Engine	[rpm]	Speed of the combustion engine

Electrical Loads Module

Description

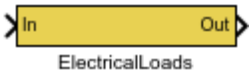

This module includes different passive electrical circuits and automotive loads. The electrical loads have the terminal voltage as input signal and the current going through the electrical load as output signal.

The passive electrical circuits are the resistance, inductance and capacitor in different parallel and series connections, power load, a current sink, and a potentiometer (Passive Elements and Circuits on page 98). The automotive loads are the lights and lighting system, PTC heater, PTC grid defroster, (Electric Loads on page 200) and an electric machine (Electric Machine Basic on page 95).

An air conditioning system of an electric vehicle in which the compressor and fan are driven electrically is also included. The modeled air conditioning system consists of electric components (a compressor and fan driven by an electric motor) and thermal interior model components such as the refrigerant circuit, the air channel and the cabin (Electric Loads on page 200).

The different loads can be switched off and on via constant blocks in the UserInterface.

The following tables show the external inports and outports of the ASM module.

Inports Control

The following table shows the ports of the Interface_External_In:

Name	Unit	Description
Reset_VehicleStates	[0|1]	Reset signal from maneuver scheduler

The following table shows the interface to connect an external ECU (real ECU):

Name	Unit	Description
Ctrl_Compressor	[-1_1]	Control signal of the compressor
Ctrl_Fan	[0_1]	Control signal of the fan in the engine cooling system
Sw_AirSource	[0|1]	Switch for air source: ▪ 0: Circulation ▪ 1: Fresh air

Inports Plant

The following table shows the ports of the Interface_External_In:

Name	Unit	Description
V_Bat_HV	[V]	Voltage of high voltage battery
V_Bat_LV	[V]	Voltage of low voltage battery
Reset	[0|1]	Resets the integrators to their initial conditions

Outports Plant

The following table shows the ports of the Interface_External_Out:

Name	Unit	Description
I_Load_HV	[A]	Load current high voltage system
I_Load_LV	[A]	Load current low voltage system
T_Ambient	[degC]	Ambient temperature

Electric Machine (BLDC) Module

Description

This ASM module consists of a controller (BLDC Controller on page 19), an inverter (Three-Phase Inverter on page 72) and, a machine model (Brushless DC Machine Alpha Beta on page 48) to simulate the control of a brushless DC machine (BLDC) with its typical trapezoidal shape function of the back EMF. The current, the speed, and the voltage reference can be set in the UserInterface subsystem.

The following tables show the external inports and outports of the ASM module.

Inports Control

The following table shows the ports of the Interface_External_In:

Name	Unit	Description
Hall_Signals[a;b;c]	[0|1]	Hall signals (phase a;b;c)
n_Engine	[rpm]	Motor speed
Reset	[0|1]	Reset integrators to their initial conditions
V_DCLink	[V]	DC Link voltage

The following table shows the interface to connect an external ECU (real ECU):

Name	Unit	Description
DutyCycle_HSD[a;b;c]	[0_1]	Duty cycle of the high-side driver (phase a;b;c)

Name	Unit	Description
DutyCycle_LSD[a;b;c]	[0_1]	Duty cycle of the low-side driver (phase a;b;c)
T_Sample	[s]	Sample time

Outports Control

The following table shows the ports of the Interface_External_Out:

Name	Unit	Description
Ctrl_mode_SW	[1n_ctrl|2i_ctrl|3v_ctrl]|4Trq_ctrl]	Switch between the control modes: ▪ 1: Speed control ▪ 2: Current control ▪ 3: Voltage control ▪ 4: Torque control

Inports Plant

The following table shows the ports of the Interface_External_In:

Name	Unit	Description
Ctrl_mode_SW	[1|2|3|4]	Switch between the control modes: ▪ 1: Speed control ▪ 2: Current control ▪ 3: Voltage control ▪ 4: Torque control
n_Engine	[rpm]	Motor speed
Reset	[0|1]	Reset integrators to their initial conditions
theta	[rad]	Mechanical motor angle
V_DCLink	[V]	DC Link voltage

Outports Plant

The following table shows ports of the Interface_External_Out:

Name	Unit	Description
I_DCLink	[A]	DC Link current
Trq	[Nm]	Motor torque

Electric Machine (PMSM) Module

Description

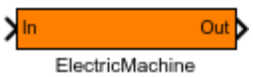

This ASM module consists of a controller (PMSM Controller on page 28), an inverter (Three-Phase DCM Inverter on page 67) and a machine model (Permanent Magnet Synchronous Machine DQ Nonlinear on page 54) to simulate the control of a permanent magnet synchronous machine (PMSM) with its typical sinusoidal shape function of the back EMF. The current, the speed, the voltage and the torque reference can be set in the **UserInterface** subsystem.

The following tables show the external inports and outports of the ASM module.

Inports Control

The following table shows the ports of the **Interface_External_In**:

Name	Unit	Description
n_Engine	[rpm]	Motor speed
Reset	[0|1]	Reset integrators to their initial conditions
theta	[rad]	Motor mechanical angle
Trq_Engine	[Nm]	Motor torque
V_DCLink	[V]	DC Link voltage

The following table shows the interface to connect an external ECU (real ECU):

Name	Unit	Description
DutyCycle_HSD[a;b;c]	[0_1]	Duty cycle of the high-side driver (phase a;b;c)
DutyCycle_LSD[a;b;c]	[0_1]	Duty cycle of the low-side driver (phase a;b;c)
T_Sample	[s]	Sample time

Outports Control

The following table shows the ports of the **Interface_External_Out**:

Name	Unit	Description
Ctrl_mode_SW	[1|2|3|4]	Switch between the control modes: ▪ 1: Speed control ▪ 2: Current control ▪ 3: Voltage control ▪ 4: Torque control

Inports Plant

The following table shows the ports of the **Interface_External_In**:

Name	Unit	Description
Ctrl_mode_SW	[1|2|3|4]	Switch between the control modes: ▪ 1: Speed control ▪ 2: Current control ▪ 3: Voltage control ▪ 4: Torque control
n_Engine	[rpm]	Motor speed
Reset	[0|1]	Reset integrators to their initial conditions

Name	Unit	Description
theta	[rad]	Motor mechanical angle
V_DCLink	[V]	DC Link voltage

Outports Plant

The following table shows the ports of the Interface_External_Out:

Name	Unit	Description
I_DCLink	[A]	DC Link current
Trq	[Nm]	Motor torque

Related topics

References

Permanent Magnet Synchronous Machine DQ Nonlinear 54
PMSM Controller 28
Three-Phase DCM Inverter 67

Electric Machine (PMSM 3LI) Module

Description

This ASM module consists of a controller (PMSM Controller Three Level on page 35), an inverter (Three-Level Three-Phase Inverter on page 64) and a machine model (Permanent Magnet Synchronous Machine DQ on page 51) to simulate the control of a permanent magnet synchronous machine (PMSM) with its typical sinusoidal shape function of the back EMF. The current, speed, voltage, and the torque reference can be set in the UserInterface subsystem.

The following tables show the external inports and outports of the ASM module.

Inports Control

The following table shows the ports of the Interface_External_In:

Name	Unit	Description
n_Engine	[rpm]	Motor speed
Reset	[0|1]	Reset integrators to their initial conditions
theta	[rad]	Motor mechanical angle
Trq_Engine	[Nm]	Motor torque
V_DCLink	[V]	DC Link voltage

Name	Unit	Description
V_DCLink[H;M;L]	[V]	DC Link voltage of the high side, low side and the neutral point

The following table shows the interface to connect an external ECU (real ECU):

Name	Unit	Description
DutyCycle_HHSD[a;b;c]	[0_1]	Duty cycle of the upper high-side driver (phase a;b;c)
DutyCycle_HLSD[a;b;c]	[0_1]	Duty cycle of the upper low-side driver (phase a;b;c)
DutyCycle_LHSD[a;b;c]	[0_1]	Duty cycle of the lower high-side driver (phase a;b;c)
DutyCycle_LLSD[a;b;c]	[0_1]	Duty cycle of the lower low-side driver (phase a;b;c)
T_Sample	[s]	Sample time

Outports Control

The following table shows the ports of the Interface_External_Out:

Name	Unit	Description
Ctrl_mode_SW	[1|2|3|4]	Switch between the control modes: ▪ 1: Speed control ▪ 2: Current control ▪ 3: Voltage control ▪ 4: Torque control

Inports Plant

The following table shows the ports of the Interface_External_In:

Name	Unit	Description
Ctrl_mode_SW	[1|2|3|4]	Switch between the control modes: ▪ 1: Speed control ▪ 2: Current control ▪ 3: Voltage control ▪ 4: Torque control
n_Engine	[rpm]	Motor speed
Reset	[0|1]	Reset integrators to their initial conditions
theta	[rad]	Motor mechanical angle
V_DCLink[H;M;L]	[V]	DC Link voltage of the high and low side as well as the neutral point

Outports Plant

The following table shows the ports of the Interface_External_Out:

Name	Unit	Description
I_DCLink_H	[A]	High-side DC Link current
I_DCLink_L	[A]	Neutral point DC Link current
I_DCLink_M	[A]	Low-side DC Link current
Trq	[Nm]	Motor torque

Related topics

References

Permanent Magnet Synchronous Machine DQ 51
PMSM Controller Three Level 35
Three-Level Three-Phase Inverter 64

Electric Machine Basic Module

Description

This ASM module simulates a simplified synchronous motor model with a current controller (Electric Machine Basic on page 95). The current controller receives the desired torque from an external ECU. The output of the module is the DC link current that represent the electric machine current and the machine torque that is used as the power source, e.g., in the drivetrain.

The following tables show the external inports and outports of the ASM module.

Inports Plant

The following table shows the ports of the Interface_External_In:

Name	Unit	Description
omega_EM	[rad/s]	EM speed in rad/s
Reset_VehicleStates	[0|1]	Resets signal from the maneuver scheduler
State_DCLink	[0|1]	State of the DC link: ▪ 0: Off ▪ 1: On
Trq_Desired	[Nm]	Desired torque
V_DCLink	[V]	DC Link voltage

Outports Plant

The following table shows the ports of the Interface_External_Out:

Name	Unit	Description
I_DCLink	[A]	DC-Link current
Trq	[Nm]	Engine torque

Related topics

References

Electric Machine Basic.....95

Electric Machine SCIM

Description

This ASM module consists of a controller (SCIM Controller on page 37), an inverter (Three-Phase DCM Inverter on page 67) and a machine model (Squirrel Cage Asynchronous Machine DQ on page 60) to simulate the control of a squirrel cage induction machine (SCIM). The current, the speed, and the voltage reference can be set in the UserInterface subsystem.

The following tables show the external inports and outports of the ASM module.

Inports Control

The following table shows the ports of the Interface_External_In:

Name	Unit	Description
n_Engine	[rpm]	Motor speed
Reset	[0|1]	Reset integrators to their initial conditions
theta	[rad]	Motor mechanical angle
Trq_Engine	[Nm]	Engine torque
V_DCLink	[V]	DC Link voltage

The following table shows the interface to connect an external ECU (real ECU):

Name	Unit	Description
DutyCycle_HSD[a;b;c]	[0_1]	Duty cycle of the high-side driver (phase a;b;c)
DutyCycle_LSD[a;b;c]	[0_1]	Duty cycle of the low-side driver (phase a;b;c)
T_Sample	[s]	Sample time

Outports Control

The following table shows the ports of the Interface_External_Out:

Name	Unit	Description
Ctrl_mode_SW	[1|2|3|4]	Switch between the control modes: ▪ 1: Speed control ▪ 2: Current control ▪ 3: Voltage control ▪ 4: Torque control

Inports Plant

The following table shows the ports of the Interface_External_In:

Name	Unit	Description
Ctrl_mode_SW	[1|2|3|4]	Switch between the control modes: ▪ 1: Speed control ▪ 2: Current control ▪ 3: Voltage control ▪ 4: Torque control
n_Engine	[rpm]	Speed of combustion engine
Reset	[0|1]	Reset integrators to their initial conditions
theta	[rad]	Motor mechanical angle
V_DCLink	[V]	DC Link voltage

Outports Plant

The following table shows the ports of the Interface_External_Out:

Name	Unit	Description
I_DCLink	[A]	DC Link current
Trq	[Nm]	Motor torque

Related topics

References

SCIM Controller 37
Squirrel Cage Asynchronous Machine DQ 60
Three-Phase DCM Inverter 67

Electrical System Module

Description

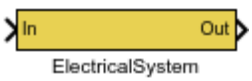

This ASM module simulates the following parts:

- A high and low voltage battery
- A DC link
- An electric air conditioning system with soft ECU
- A soft ECU charge controller to control the charging procedure of the high voltage battery in combination with a charging station.

The high voltage supply is delivered by a high voltage multi-cell battery model (Battery Multicell on page 184). The battery high voltage is provided to the module outport via a DC link (RC Load Series on page 105).

With the external inport signal **Sw_DCLink[0Off|1On]** the DC link is switched on, e.g., by an external ECU that controls the pre-charge phase of the DC link capacitor. If the capacitor voltage reaches the battery voltage, the pre-charge phase is finished and the external input signal **State_DCLink[0Off|1On]** is set to *one*. Now, the DC link is ready for operation, and the battery voltage is provided directly to the DC link voltage outport of the module and the compressor of the air conditioning system.

The battery terminal voltage calculation depends on the external load and the compressor currents. The battery also simulates the state of charge and the battery temperature, depending on the charge and discharge current. A cooling plate for the top and for the bottom surface of the battery pack is simulated. Here, the heat flux density of the cooling system depends on the battery temperature.

A low voltage battery (Battery on page 176) supplies the electrical power to the low voltage loads, such as for the fan of the air conditioning system. The low voltage battery is charged with energy applied by the high voltage battery system.

As the electrical load, an air conditioning system is simulated. It consists of an electrical driven compressor, fan, and thermal interior model components (the refrigerant circuit, the air channel, and the cabin) (Overview of the Air Conditioning Subsystem on page 201). The soft ECU air conditioning model is used to simulate the control of the vehicle's cabin temperature (Soft ECU Air Conditioning on page 223).

During a DC battery charging procedure, the vehicle soft ECU charge controller monitors the battery and sends a desired battery charging current command to the charging station (Soft ECU Charge Controller on page 128).

Refer to Overview of the Soft ECU Battery Charging on page 127 for an overview of the soft ECU battery charging.

The following tables show the external inports and outports of the ASM module.

Inports Control

The following table shows the ports of the **Interface_External_In**:

Name	Unit	Description
Reset_VehicleStates	[0|1]	Reset signal from maneuver scheduler
v_Vehicle	[km/h]	Vehicle velocity

The following table shows the interface to connect an external ECU (real ECU):

Name	Unit	Description
Ctrl_Compressor	[-1_1]	Control signal of compressor
Ctrl_Fan	[0_1]	Control signal of fan in the engine cooling system
I_Bat_Charge_Actual	[A]	Battery charging current
I_Req	[A]	Current request
SOC_Bat	[%]	Battery state of charge
Sw_AirSource	[0|1]	Switch for air source: ▪ 0: Circulation ▪ 1: Fresh air
V_Bat	[V]	Battery voltage

Outports Control

The following table shows the ports of the Interface_External_Out:

Name	Unit	Description
I_Bat_Charge_Actual	[A]	Battery charging current
I_Req	[A]	Current request
SOC_Bat	[%]	Battery state of charge
V_Bat	[V]	Battery voltage

Inports Plant

The following table shows the ports of the Interface_External_In:

Name	Unit	Description
Enable_v_Init	[0|1]	Flag that indicates if the ASM vehicle simulation has a velocity different from zero
I_DCLink	[A]	DC link current
I_DCLink_1	[A]	DC link current 1
I_DCLink_2	[A]	DC link current 2
I_DC_ChargingStation	[A]	Charging station DC current
p_Ambient	[Pa]	Ambient pressure
Reset_VehicleStates	[0|1]	Reset signal from the maneuver scheduler
State_DCLink	[0|1]	State of DC link: ▪ 0: Off ▪ 1: On
Sw_DCLink	[0|1]	Switch DC link: ▪ 0: Off ▪ 1: On
T_Ambient	[°C]	Ambient temperature
V_DC_ChargingStation	[V]	Charging station DC voltage

Outports Plant

The following table shows the ports of the Interface_External_Out:

Name	Unit	Description
SOC_Bat_LV	[%]	State of charge low voltage battery
SOC_Bat_HV	[%]	State of charge high voltage battery
Sw_DCLink_Reset	[0|1]	Switch for DC link reset: ▪ 0: Disabled ▪ 1: Enabled
T_Bat_HV	[°C]	Temperature high voltage battery
T_Bat_LV	[°C]	Temperature low voltage battery
V_Bat_HV	[V]	Voltage of high voltage battery
V_Bat_LV	[V]	Voltage of low voltage battery
V_DCLink	[V]	DC Link voltage

Related topics

References

Battery 176
Battery Multicell 184
Overview of the Air Conditioning Subsystem 201
Overview of the Soft ECU Battery Charging 127
RC Load Series 105
Soft ECU Air Conditioning 223
Soft ECU Charge Controller 128

Engine Basic Module

Description

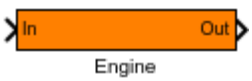

The engine is modelled as a simple look-up table, where the engine torque is calculated as a function of engine speed and the driver accelerator pedal position.

The following tables show the external inports and outports of the ASM module.

Subsystems

The module contains the following subsystems:

- Engine Basic Subsystem on page 365
- Soft ECU Engine Subsystem on page 366

Inports Control

The following table shows the ports of the Interface_External_In:

Name	Unit	Description
Enable_n_Engine_Idle_Request	[0|1]	Flag to activate the engine idle speed request: ▪ 0: Off ▪ 1: On
Enable_Trq_Decrease_Fast_ESP	[0|1]	Flag to enable or disable the request for ESP fast torque decreasing
Enable_Trq_Increase_Fast_ESP	[0|1]	Flag to enable or disable the request for ESP fast torque increasing
Enable_Trq_Request_Extern1	[0|1]	Flag to enable or disable the first external torque request
Enable_Trq_Request_Extern2	[0|1]	Flag to enable or disable the second external torque request
Factor_Trq_Engine_Red	[%]	Engine torque reduction factor
Mode_StartButtonState	[1|2]	Controls whether the signal for the activation of the start button is calculated by the soft ecu or provided by a stimulus signal. ▪ 1: Stimulus ▪ 2: Soft ECU
n_Engine	[rpm]	Speed of the combustion engine
n_Engine_Idle_Request	[rpm]	Engine idle speed request
Pos_AccPedal_Driver	[%]	Position of the accelerator pedal from the longitudinal controller
Reset_States	[0|1]	Reset states
State_StartButton	[-1|0|1|2]	State of the start button: ▪ -1: Power off ▪ 0: Acceleration ▪ 1: Power on ▪ 2: Starter on
Sw_CrankShaft_Reset	[0|1]	Crankshaft reset switch: ▪ 0: Disabled ▪ 1: Enabled
Sw_Ignition	[0|1]	Ignition signal - terminal 15: ▪ 0: Off ▪ 1: On
Sw_StarterReq	[0|1]	Starter request signal (usually sent to engine ECU): ▪ 0: Off ▪ 1: On
Trq_Decrease_Request_Fast_ESP	[Nm]	ESP fast torque decreasing request

Name	Unit	Description
Trq_Increase_Request_Fast_ESP	[Nm]	ESP fast torque increasing request
Trq_Request_Extern1	[Nm]	First external torque request
Trq_Request_Extern2	[Nm]	Second external torque request
Trq_Request_ICE	[Nm]	Torque request ICE
Vehicle_Topology	[-2|-1|0|2]	Vehicle topology: ▪ -2: EM only ▪ -1: ICE only ▪ 0: P0 hybrid ▪ 2: P2 hybrid

Outports Control

The following table shows the ports of the Interface_External_Out:

Name	Unit	Description
CrankAngle_Cyl	[aTDC]	Crank angle per cylinder, positive value is after TDC
Enable_Trq_Shift_Request	[0|1]	Flag to enable the ICE torque intervention during gear shift
EngOP_Num	[]	Engine operation point
n_Engine_Idle_Set	[rpm]	Setpoint for the idle speed of combustion engine
n_Engine_Meas	[rpm]	Measured speed of the combustion engine
p_Ambient	[Pa]	Ambient pressure
Pos_AccPedal_Meas	[%]	Measured accelerator pedal position
State_ICEngine	[0|1|2|3|4]	ICE state: ▪ 0: Off or error ▪ 1: Ignition on ▪ 2: Starter on ▪ 3: Running ▪ 4: Shutdown
State_StartStop	[1|2|3|4]	Start-stop state: ▪ 1: Off, ▪ 2: Not ready ▪ 3: Ready to stop the engine ▪ 4: Engine actively stopped by the system
Sw_Replace_Env	[0|1]	Switch for replacing the ambient conditions ▪ 0: Off - source is parameters ▪ 1: On - source is measurements
Sw_Starter	[0|1]	Starter activate switch: ▪ 0: Off ▪ 1: On

Name	Unit	Description
T_Ambient	[°C]	Ambient temperature
Trq_MeanEff_Engine_Meas	[Nm]	Measured mean effective engine torque
Trq_Shift_Request	[Nm]	Torque intervention during gear shift

Inports Plant

The following table shows the ports of the Interface_External_In:

Name	Unit	Description
n_Engine	[rpm]	Speed of combustion engine
Reset_States	[0|1]	Reset states
v_x_Vehicle	[km/h]	Vehicle velocity in forward direction

Outports Plant

The following table shows the ports of the Interface_External_Out:

Name	Unit	Description
T_Coolant_ICE	[°C]	Temperature of the engine coolant
Trq_Fric_Engine	[Nm]	Friction torque of the engine
Trq_MeanEff_Engine	[Nm]	Mean effective engine torque

Engine Gasoline Module

Description

This module simulates a gasoline engine.

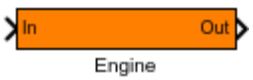

The engine model consists of components for:

- Air path inlcuding a turbocharger.
- Fuel system.
- Piston system including the combustion process.
- Cooling system.
- Exhaust system.
- Soft ECU.

It is modelled as a mean value engine model with additional combustion torque modulation. The mean value model means that the processes in the engine are averaged over an engine cycle.

The engine is controlled by a soft ECU. The soft ECU collects models for the simulation of the gasoline engine model if no real ECU is available. Its inputs are common sensor and the outputs are common actuators signals.

The following tables show the external inports and outports of the ASM module.

Subsystems

The module contains the following subsystems:

- Air Path Subsystem on page 369
- Air Path Control Subsystem on page 391
- Cooling Subsystem on page 373
- Evaporator Subsystem on page 374
- Exhaust System Subsystem on page 378
- Fuel System Subsystem on page 379
- Piston Engine Subsystem on page 383
- Soft ECU Gasoline Subsystem on page 386
- Torque Control Subsystem on page 393

Inports Control

The following table shows the ports of the Interface_External_In:

Name	Unit	Description
EngOPNum	[]	Engine operating point number
Factor_Trq_Engine_Red	[%]	Engine torque reduction factor
Gear	[]	Gear
HybridMode_ICE	[0|1|2|3]	Hybrid mode of the combustion engine: ▪ 0: ICE off ▪ 1: ICE on, idle ▪ 2: ICE on, power ▪ 3: Error
Ignition_ICE	[0|1]	Ignition ICE: ▪ 0: Off ▪ 1: On
Mode_BSG	[-1|0|1|2|3|4|5]	Mode of the belt-driven starter generator (BSG): ▪ -1: Not available ▪ 0: Stop combustion engine ▪ 1: Start combustion engine ▪ 2: Generator ▪ 3: Recuperation ▪ 4: Boost ▪ 5: Idle
Mode_Transmission	[1|2]	Transmission mode switch: ▪ 1: Manual ▪ 2: Automatic
n_Engine	[rpm]	Speed of the combustion engine

Name	Unit	Description
p_Ambient	[Pa]	Ambient pressure
Pos_AccPedal	[%]	Position of the accelerator pedal
Pos_BrakePedal	[%]	Brake pedal position
Pos_ClutchPedal	[%]	Clutch pedal position
Reset_States	[0|1]	Reset states
SelectorLever	[-3|-2|-1|0|1]	Selector lever position: ▪ -3: TipShift ▪ -2: Park ▪ -1: Reverse ▪ 0: Neutral ▪ 1: Drive
StarterReq_ICE	[0|1]	Starter request: ▪ 0: Off ▪ 1: On
Sw_DriveMode	[0|1|2]	Drive mode: ▪ 0: Hybrid ▪ 1: ICE only ▪ 2: EM only
Sw_Testbench	[0|1]	Switch to activate the test bench: ▪ 0: Off ▪ 1: On
T_Ambient	[°C]	Ambient temperature
Trq_BSG	[Nm]	Torque of the belt-driven starter generator (BSG)
Trq_Request_ICE	[Nm]	Torque request ICE
V_Bat_LV	[V]	Voltage of low voltage battery
v_Vehicle	[km/h]	Vehicle velocity

The following table shows the interface to connect an external ECU (real ECU):

Name	Unit	Description
CrankAngle_Cyl	[deg]	Crank angle per cylinder, positive value is after TDC
Ctrl_CamPhaser_Exhaust	[0_1]	Control signal of the variable-geometry turbocharger (VGT)
Ctrl_CamPhaser_Intake	[0_1]	Control signal for the cam phaser of the intake cam shaft
Ctrl_Comp_Bypass	[0_1]	Control signal for the low-pressure compressor bypass valve
Ctrl_Comp_Bypass_HP	[0_1]	Control signal for the high-pressure compressor bypass valve
Ctrl_EGR	[0_1]	Control signal of the electrical EGR valve

Name	Unit	Description
Ctrl_FuelMeterUnit	[mA]	Control signal of the fuel metering unit (high-pressure pump) for the common rail system
Ctrl_PCV	[0_1]	Control signal for the tank evaporation pressure control valve
Ctrl_PresCtrlValve	[mA]	Control signal of the pressure control valve in the common rail system
Ctrl_Throttle	[0_1]	Control signal of the electrical throttle valve
Ctrl_VCV	[0_1]	Control signal for the tank evaporation vapour control valve
Ctrl_VSV	[0_1]	Control signal for the tank evaporation vent shut valve
Ctrl_VTG_HP	[0_1]	Control signal of the high-pressure variable-geometry turbocharger (VGT)
Ctrl_WGate	[0_1]	Control signal of the turbocharger with the wastegate valve
Ctrl_WGate_HP	[0_1]	Control signal of high-pressure turbocharger with the wastegate valve
Fan1	[0_1]	Control signal of the first fan in the engine cooling system
Fan2	[0_1]	Control signal of the second fan in the engine cooling system
n_Engine_Idle_Set	[rpm]	Set point for the idle speed of the combustion engine
p_Ambient	[Pa]	Ambient pressure
phi_FMU_Energized	[deg]	Crank angle to the energize fuel metering unit (Common rail system in the combustion engine)
phi_Ign	[rad]	Vector with crank angles for the start of the fuel ignition
phi_Inj	[bTDC]	Vector with crank angles for the start of the fuel injection
PulseState	[]	Pulse state
State_Engine	[0|1|2|3|4]	Engine state ▪ 0: Engine off ▪ 1: Ignition on ▪ 2: Ignition on and starter activated ▪ 3: Engine is running ▪ 4: Ignition is switched off, shutdown active
State_StartStop	[1|2|3|4]	Start-stop state ▪ 1: Off ▪ 2: Not ready

Name	Unit	Description
		▪ 3: Ready to stop the engine ▪ 4: Engine actively stopped by the system
Sw_MainRelay	[0|1]	Switch to activate the main relay of the ECU
Sw_Starter	[0|1]	Starter activate switch: ▪ 0: Off ▪ 1: On
T_Ambient	[°C]	Ambient temperature
t_Inj_Direct	[us]	Injection time vector
t_Inj_Port	[us]	Injection time vector per cylinder for manifold injection
UpdateCounter	[]	Update counter
UpdateState	[]	Update state (For details, refer to .)

Outports Control

The following table shows the ports of the Interface_External_Out:

Name	Unit	Description
CrankAngle_Cyl	[aTDC]	Crank angle per cylinder, positive value is after TDC
Enable_Trq_Shift_Request	[0|1]	Flag to enable the ICE torque intervention during gear shift
EngOP_Num	[]	Engine operation point
n_Engine_Idle_Set	[rpm]	Setpoint for the idle speed of the combustion engine
n_Engine_Meas	[rpm]	Measured speed of the combustion engine
p_Ambient	[Pa]	Ambient pressure
Pos_AccPedal_Meas	[%]	Measured accelerator pedal position
State_ICEngine	[0|1|2|3|4]	ICE state: ▪ 0: Off or error ▪ 1: Ignition on ▪ 2: Starter on ▪ 3: Running ▪ 4: Shutdown
State_StartStop	[1Off|2NotReady|3Ready|4EngStopped]	Start-stop state: ▪ 1: Off ▪ 2: Not ready ▪ 3: Ready to stop the engine ▪ 4: Engine actively stopped by the system

Name	Unit	Description
Sw_Replace_Env	[0|1]	Switch for replacing the ambient conditions: ▪ 0: Off - source is parameters ▪ 1: On - source is measurements
Sw_Starter	[0|1]	Starter activate switch: ▪ 0: Off ▪ 1: On
T_Ambient	[°C]	Ambient temperature
Trq_MeanEff_Engine_Meas	[Nm]	Measured mean effective engine torque
Trq_Shift_Request	[Nm]	Torque intervention during gear shift

Inports Plant

The following table shows the ports of the Interface_External_In:

Name	Unit	Description
n_Engine	[rpm]	Speed of the combustion engine
p_Ambient	[Pa]	Ambient pressure
Pos_AccPedal	[%]	Position of the accelerator pedal
Reset_States	[0|1]	Reset states
s_Total_Vehicle_Road	[m]	Driven distance of the vehicle
T_Ambient	[°C]	Ambient temperature
V_Bat_LV	[V]	Voltage of low voltage battery
v_Vehicle	[km/h]	Vehicle velocity

The following table shows the interface to connect an external plant (real plant):

Name	Unit	Description
Pos_EGR	[%]	EGR valve position, 0 means the valve is closed
Pos_Throttle	[%]	Position of throttle valve

Outports Plant

The following table shows the ports of the Interface_External_Out:

Name	Unit	Description
T_Coolant_ICE	[°C]	Temperature of the engine coolant
Trq_Fric_Engine	[Nm]	Engine friction torque
Trq_MeanEff_Engine	[Nm]	Mean effective engine torque
Trq_MeanEff_Engine_Mod	[Nm]	Mean effective engine torque (modulated)

Environment Basic Module

Description

The environment provides the reference values to the driver and other model parts, for example to follow a reference velocity profile or an engine speed set. It is possible to perform different maneuvers, like stimulus or driving cycles.

The following tables show the external inports and outports of the ASM module.

Inports Plant

The following table shows the ports of the Interface_External_In:

Name	Unit	Description
EngOP_Num	[]	Engine operation point
n_Engine	[rpm]	Speed of the combustion engine
n_Engine_Meas	[rpm]	Measured speed of the combustion engine
p_Ambient	[Pa]	Ambient pressure
Pos_AccPedal_Meas	[%]	Measured accelerator pedal position
State_Engine	[0|1|2|3|4]	Engine state: ▪ 0: Engine off ▪ 1: Ignition on ▪ 2: Ignition on and starter activated ▪ 3: Engine is running ▪ 4: Ignition is switched off, shutdown active
Sw_Replace_Env	[0|1]	Switch for replacing the ambient conditions: ▪ 0: Off - source is parameters ▪ 1: On - source is measurements
T_Ambient	[°C]	Ambient temperature
t_Preview_vRef_Driver	[s]	Preview time for the driver model
Trq_MeanEff_Engine	[Nm]	Mean effective engine torque
Trq_MeanEff_Engine_Meas	[Nm]	Measured mean effective engine torque
v_Vehicle	[km/h]	Vehicle velocity

Outports Plant

The following table shows the ports of the Interface_External_Out:

Name	Unit	Description
Enable_v_Init	[0|1]	Drivetrain initialization flag for scenarios with non-zero vehicle initial velocity
EngOPNum	[]	Engine operating point number
Gear_Maneuver	[]	Gear stimulus from the maneuver
Gear_Max	[0|1_n]	Gear setpoint defined by the maneuver input ▪ 0: Off ▪ 1_n: Gear setpoint
Mode_AcceleratorBrake	[1|2]	Controls whether accelerator and brake pedal positions are stimulus signals or controlled by driver ▪ 1: Stimulus ▪ 2: Driver
Mode_GearClutch	[1|2|3|4]	Switch for the mode signal of gear and clutch pedal source: ▪ 1: Stimulus ▪ 2: Driver ▪ 3: Open clutch ▪ Reference gear
Mode_SelectorLever	[1|2]	Switch for mode signal of the selector lever source: ▪ 1: Stimulus ▪ 2: Driver
Mode_StartButtonState	[1|2]	Controls whether the signal for the activation of the start button is calculated by the soft ECU or provided by a stimulus signal: ▪ 1: Stimulus ▪ 2: Soft ECU
n_Engine_Set	[rpm]	Setpoint for the speed of the combustion engine
p_Ambient	[Pa]	Ambient pressure
Pos_AccPedal_Maneuver	[%]	Accelerator pedal position stimulus from the maneuver scheduler
Pos_BrakePedal_Maneuver	[%]	Brake pedal position stimulus from the maneuver scheduler
Pos_ClutchPedal_Maneuver	[%]	Clutch pedal position stimulus from the maneuver scheduler
Reset_States	[0|1]	Reset states
s_Total_Vehicle_Road	[m]	Driven distance of the vehicle

Name	Unit	Description
SelectorLever_Maneuver	[-3|-2|-1|0|1]	Selector lever position from maneuver: ▪ -3: TipShift ▪ -2: Park ▪ -1: Reverse ▪ 0: Neutral ▪ 1: Drive
Slope	[%]	Slope of the road
State_StartButton	[-1|0|1|2]	State of the start button: ▪ -1: Power off ▪ 0: Acceleration ▪ 1: Power on ▪ 2: Starter on
Sw_StartButton	[0|1]	Start button actuation input: ▪ 0: Off ▪ 1: On
Sw_Testbench	[0|1]	Switch to activate the test bench: ▪ 0: Off ▪ 1: On
Sw_TipShift_Maneuver	[-1|0|1]	TipShift request stimulus signal from the maneuver: ▪ -1 : Down shift ▪ 0: Off ▪ 1: Up shift
Sw_TorqueController	[0|1]	Switch to activate the torque controller: ▪ 0: Off ▪ 1: On
T_Ambient	[°C]	Ambient temperature
v_Vehicle_Ref	[km/h]	Reference vehicle velocity
v_Vehicle_Preview_Ref	[km/h]	Preview reference vehicle velocity

Environment Traffic Module

Description

This module provides the environment for the vehicle model. For this, it contains maneuver and road models. The maneuver provides driving instructions for

accelerating, braking, and steering the vehicle model. The road model provides the connection to the road the vehicle model runs on.

Furthermore, the ASM module contains a number of sensor models. For example a 3-D sensor model, a 2-D sensor model, a line sensor, and a collision sensor.

For the simulation of fellow vehicles, two-wheelers or pedestrians a traffic model is provided.

Furthermore, the module contains a groundtruth interface. This interface outputs the groundtruth data of the simulated environment.

The following tables show the external inports and outports of the ASM module.

Submodules and subsystems

The module contains the following submodules and subsystems:

- Maneuver Submodule on page 396
- Road Submodule on page 399
- Traffic submodule:
  - Fellow Movement Subsystem on page 400
  - Object Parameters Subsystem on page 401
- Sensors submodule:
  - Collision Sensor Subsystem on page 402
  - Line Sensor subsystem
  - Object Sensor 2-D Subsystem on page 404
    - Object Data Subsystem on page 407
    - Schedule and Calculate Sensor Subsystem on page 408
    - Sensor Mapping Subsystem on page 411
    - Sensor Parameters Subsystem on page 413
  - Object Sensor 3-D Subsystem on page 415
    - Custom Points Subsystem on page 417
    - Object Data Subsystem on page 419
    - Radar Effects Subsystem on page 422
    - Schedule And Calculate Sensor Subsystem on page 426
    - Sensor Mapping Subsystem on page 428
    - Sensor Parameters Subsystem on page 430
  - Traffic Sign Sensor Subsystem on page 431
- Groundtruth Submodule on page 432

Inports

The following table shows the ports of the Interface_External_In:

Name	Unit	Description
a_y_Vehicle_CoG	[m/s^2]	Lateral acceleration of vehicle with COG in consideration
Active_CP_VehDyn_Trailer	[]	Vector of all active contact points
AEB	[0|1]	Autonomous emergency brake flag from soft ECU ACC
Angle_SteeringWheel	[deg]	Steering wheel angle

Name	Unit	Description
Angle_SteeringWheel_SteeringSystem	[deg]	Steering wheel angle
Angle_Vehicle_CoorSys_E	[x;y;z][deg]	Vehicle orientation (roll, pitch, yaw)
Coef_RollingRes	[FL;FR;RL;RR][]	Rolling resistance coefficient
Coef_RollingRes_Mean	[]	Coefficient for the rolling resistance
CorneringStiffness	[FL;FR;RL;RR][N]	Cornering stiffness of tires
FCW	[0|1]	Forward collision warning flag from soft ECU ACC
Gear	[]	Gear
Mode_Drivetrain	[1|2|3|4|5]	Drivetrain mode: ▪ 1: AWD ▪ 2: FWD ▪ 3: RWD ▪ 4: FF-4WD ▪ 5: FF
Mode_Transmission	[1|2]	Transmission mode switch: ▪ 1: Manual ▪ 2: Automatic
Pos_AccPedal	[%]	Position of the accelerator pedal
Pos_BrakePedal	[%]	Brake pedal position
Pos_ClutchPedal	[%]	Clutch pedal position
Pos_CP_FL_CoorSys_E	[x;y][m]	Position of the front left contact points in the earth coordinates
Pos_CP_FL_Trailer_CoorSys_E[x;y]	[x;y][m]	Position of trailer front left contact points in the earth coordinates
Pos_CP_FL2_Trailer_CoorSys_E[x;y]	[x;y][m]	Position of trailer front (inner) left contact points in the earth coordinates
Pos_CP_FR_CoorSys_E	[x;y][m]	Position of the front right contact points in the earth coordinates
Pos_CP_FR_Trailer_CoorSys_E[x;y]	[x;y][m]	Position of trailer front right contact points in the earth coordinates
Pos_CP_FR2_Trailer_CoorSys_E	[x;y][m]	Position of trailer front (inner) right contact points in the earth coordinates
Pos_CP_R2L_CoorSys_E[x;y]	[x;y][m]	Position of second rear left contact points in the earth coordinates
Pos_CP_R2L_Trailer_CoorSys_E	[x;y][m]	Position of trailer second rear left contact points in the earth coordinates
Pos_CP_R2L2_CoorSys_E[x;y]	[x;y][m]	Position of second rear (inner) left contact points in the earth coordinates
Pos_CP_R2L2_Trailer_CoorSys_E	[x;y][m]	Position of trailer second rear (inner) left contact points in the earth coordinates
Pos_CP_R2R_CoorSys_E[x;y]	[x;y][m]	Position of second rear right contact points in the earth coordinates

Name	Unit	Description
Pos_CP_R2R_Trailer_CoorSys_E	[x;y][m]	Position of trailer second rear right contact points in the earth coordinates
Pos_CP_R2R2_CoorSys_E[x;y]	[x;y][m]	Position of second rear (inner) right contact points in the earth coordinates
Pos_CP_R2R2_Trailer_CoorSys_E	[x;y][m]	Position of trailer second rear (inner) right contact points in the earth coordinates
Pos_CP_RL_CoorSys_E	[x;y][m]	Position of the rear left contact points in the earth coordinates
Pos_CP_RL_Trailer_CoorSys_E	[x;y][m]	Position of trailer rear left contact points in the earth coordinates
Pos_CP_RL2_CoorSys_E	[x;y][m]	Position of rear (inner) left contact points in the earth coordinates
Pos_CP_RL2_Trailer_CoorSys_E	[x;y][m]	Position of trailer rear (inner) left contact points in the earth coordinates
Pos_CP_RR_CoorSys_E	[x;y][m]	Position of the rear right contact points in the earth coordinates
Pos_CP_RR_Trailer_CoorSys_E	[x;y][m]	Position of trailer rear right contact points in the earth coordinates
Pos_CP_RR2_CoorSys_E[x;y]	[x;y][m]	Position of rear (inner) right contact points in the earth coordinates
Pos_CP_RR2_Trailer_CoorSys_E	[x;y][m]	Position of trailer rear (inner) right contact points in the earth coordinates
Pos_Vehicle_CoorSys_E	[x;y;z][m]	Vector containing the ASM vehicle position values in the earth coordinate system [x,y,z]
r_Dyn_Tire	[FL;FR;RL;RR][m]	Dynamic tire radius
r_Dyn_Tire_Mean	[m]	Mean dynamic tire radius
RollRate_Vehicle_CoG	[deg/s]	Vehicle roll rate
RotationMatrix_V_to_E	[1x9]	Rotation matrix to transfrom values from the vehicle to the earth coordinate system
s_Preview	[m]	Vector with preview distances for lateral control and vehicle reference velocity calculation.
s_Vehicle	[m]	Driven distance of the vehicle
SelectorLever	[-3|-2|-1|0|1]	Selector lever position: ▪ -3: TipShift ▪ -2: Park ▪ -1: Reserve ▪ 0: Neutral ▪ 1: Drive
Sw_MasterBrakeCylinder_Mode	[1|2|3]	Master brake cylinder mode: ▪ 1: Modeled linearly ▪ 2: Modeled physically ▪ 3: Brake booster
Sw_Tire_Model	[1|2]	Switch for tire model:

Name	Unit	Description
		▪ 1: TMeasy ▪ 2: Magic Formula
t_Preview_vRef_Driver	[s]	Preview time for the driver model
Trq_SteeringWheel_SteeringSystem	[Nm]	Torque in the steering column
v_x_Vehicle_CoG	[km/h]	Longitudinal vehicle velocity
v_y_Vehicle_CoG	[km/h]	Lateral vehicle velocity at centre of gravity
YawRate_Vehicle_CoG	[deg/s]	Vehicle yaw rate

Outports

The following table shows the ports of the Interface_External_Out:

Name	Unit	Description
a_x_Max	[m/s^2]	Maximum longitudinal acceleration for the reference velocity calculation
a_x_Min	[m/s^2]	Minimum longitudinal acceleration for the reference velocity calculation
a_x_Vehicle_Ref_TrafficDriver	[m/s^2]	Reference acceleration of the ASM vehicle by the traffic driver feature
a_y_Max	[m/s^2]	Maximum lateral acceleration (for velocity calculation in curves)
Angle_Hor_Rel_Fellows	[deg]	Horizontal angle of detected fellow vehicle
Angle_SteeringWheel_Maneuver	[deg]	Steering wheel angle stimulus from the maneuver scheduler
Angle_Vehicle_Init_CoorSys_E	[x;y;z][rad]	Initial yaw angle of the ASM vehicle in earth coordinate system
Angle_Yaw_Veh_Road	[deg]	Yaw angle of the reference line of the road at the current position of the ASM vehicle
Const_Steering_Mode_Manual	[1|2]	Controls whether the manual steering mode expects the steering wheel angle or the steering wheel torque: ▪ 1: Angle ▪ 2: Torque
Curv_Preview_Road	[1/m]	Road curvature at previewed road positions
Curv_Vehicle_Road	[1/m]	Curvature of the road reference line at the current position of the ASM vehicle
d_Total_Fellows	[m]	Lateral fellow vehicle position on the road. This signal is required to ensure hold functionality.
d_Vehicle_Road	[m]	Lateral distance of the vehicle regarding the preferred lane
Dist_Border_Left	[m]	Distance from the ASM vehicle reference coordinate system to the left road border
Dist_Border_Right	[m]	Distance from the ASM vehicle reference coordinate system to the right road border
Dist_Fellows	[m]	Distance to fellow vehicle, detected by sensor
ECU_Commands	[]	ECU commands derived from the customized maneuver user signals

Name	Unit	Description
Enable_v_Init	[0|1]	Flag that indicates if the ASM vehicle simulation has a velocity different from zero
EngOPNum	[]	Engine operating point number
Fric_Coeff_CP	[:][]	Friction coefficients at the contact point positions
Gear_Maneuver	[]	Gear stimulus from the maneuver
Gear_Max	[0Off|1_n]	Gear setpoint defined by maneuver input
Height_Fellows	[m]	Height of the fellow vehicles
Keep_VehiclePosition	[0|1]	Flag to disable all integrators in the model to keep the vehicle at its current position
Length_Fellows	[m]	Length of fellow vehicles
Mode_AcceleratorBrake	[1|2]	Controls whether accelerator and brake pedal positions are stimulus signals or controlled by the driver: ▪ 1: Stimulus ▪ 2: Driver
Mode_AdaptVelocityToRoad	[1|2]	Controls whether the reference velocity calculation on roads is active: ▪ 1: Off ▪ 2: On
Mode_CurvatureCalculation	[1|2]	Specifies the curvature calculation mode: ▪ 1: Road ▪ 2: Driver
Mode_ForceToRoad	[1|2]	Controls the limitation to valid lane indices: ▪ 1: Off ▪ 2: On
Mode_GearClutch	[1|2|3|4]	Switch for mode signal of gear and clutch pedal source: ▪ 1: Stimulus ▪ 2: Driver ▪ 3: Open clutch ▪ 4: Reference gear
Mode_LatCtrl	[1|2]	Lateral control type: ▪ 1: Pos ▪ 2: Yaw
Mode_RelativeLane	[0|1]	Controls the interpretation of the lane index in the road calculation: ▪ 0: Center lane ▪ 1: Preferred lane
Mode_Road	[1|2|3|4]	Controls whether the vehicle travels on a flat area, on a straight or circular road or on the road that is created with the ModelDesk Road Generator: ▪ 1: No road ▪ 2: Straight road ▪ 3: Circle ▪ 4: Road from Road Generator

Name	Unit	Description
Mode_SelectorLever	[1|2]	Switch for mode signal of the selector lever source: ▪ 1: Stimulus ▪ 2: Driver
Mode_StartButtonState	[1|2]	Controls whether the signal for the activation of the start button is calculated by the soft ECU or provided by a stimulus signal: ▪ 1: Stimulus ▪ 2: Soft ECU
Mode_Steer	[1|2|3]	Controls whether the steering wheel angle is controlled by a stimulus signal or by the driver: ▪ 1: Stimulus ▪ 2: Driver ▪ 3: Fix
Mode_TrafficDriver	[1|2]	Controls the Traffic driver mode of the ASM vehicle: ▪ 1: Off ▪ 2: On
n_Engine_Set	[rpm]	Setpoint for speed of combustion engine
Object_ID	[]	Object ID of the detected object
p_Ambient	[Pa]	Ambient pressure
Pitch_Preview_Road	[deg]	Pitch angle of the road at the positions of the preview points
Pos_AccPedal_Maneuver	[%]	Accelerator pedal position stimulus from the maneuver scheduler
Pos_BrakePedal_Maneuver	[%]	Brake pedal position stimulus from the maneuver scheduler
Pos_ClutchPedal_Maneuver	[%]	Clutch pedal position stimulus from the maneuver scheduler
Pos_Vehicle_Init_CoorSys_E	[x;y;z][m]	Initial position of the ASM vehicle in earth coordinate system
Pos_x_Preview_Road	[m]	Vector of previewed road positions in the x direction (earth coordinates
Pos_x_Ref_Vehicle_Road	[m]	x-position of the reference line of the road at the current position of the vehicle
Pos_y_Preview_Road	[m]	Vector of previewed road positions in the y direction (earth coordinates
Pos_y_Ref_Vehicle_Road	[m]	y-position of the reference line of the road at the current position of the vehicle
Pos_z_CP	[:][m]	z-position of the contact points
Pos_z_Preview_Road	[m]	Vector of the previewed road positions in the z-direction (earth coordinates)
PosVec_MainPnt_Fellows	[x;y;z][m]	Vector with fellow vehicle main point position
q_dt_Vehicle_Init	[6x1]	Vector signal with the initial velocity and angular velocity of the ASM vehicle
Reset_VehicleStates	[0|1]	Reset signal from maneuver scheduler
Roll_Preview_Road	[deg]	Roll angle of the road at the positions of the preview points
Route_Direction_Init	[]	Direction on the route for the all fellow vehicles
s_Fellows_Ref	[m]	Distance s along the route for all traffic fellows
s_Total_Vehicle_Road	[m]	The total distance along the route

Name	Unit	Description
s_Vehicle_Init	[m]	Initial distance s along the road
s_Vehicle_Road	[m]	The distance s along the route at the position of the vehicle. Reset to zero after each turn on a closed route
SelectorLever_Maneuver	[-3|-2|-1|0|1]	Selector lever position from the maneuver: ▪ -3: TipShift ▪ -2: Park ▪ -1: Reverse ▪ 0: Neutral ▪ 1: Drive
Slope_Veh_Road	[%]	Slope of the road at the current distance s of the vehicle
Speed_Limit_Preview_Road	[km/h]	Speed limit as defined in the scenery section of the road element at the position of the ASM vehicle
State_StartButton	[-1|0|1|2]	State of the start button: ▪ -1: Power off ▪ 0: Acceleration ▪ 1: Power on ▪ 2: Starter on
Sw_LatDriver	[1|2]	Controls whether lateral_control1 or lateral_control2 is active: ▪ 1: lateral_control1 ▪ 2: lateral_control2
Sw_ParkingBrake	[0|1]	Controls the parking brake: ▪ 0: Off ▪ 1: On
Sw_StartButton	[0|1]	Start button actuation input: ▪ 0: Off ▪ 1: On
Sw_Steering_Mode	[1|2]	Controls whether the steering angle is determined by the maneuver or manually: ▪ 1: Manual ▪ 2: Maneuver Scheduler
Sw_SteeringMode	[1|2]	Controls steering angle calculation method (torque or angle): ▪ 1: Angle ▪ 2: Torque
Sw_Testbench	[0|1]	Switch to activate the test bench: ▪ 0: Off ▪ 1: On
Sw_TipShift_Maneuver	[-1|0|1]	TipShift request stimulus signal from maneuver: ▪ -1: Downshift ▪ 0: Off ▪ 1: Upshift
Sw_Tire_Parameter_Set_CP	[:][1|2|3|4]	Controls the used tire parameter set.
T_Ambient	[°C]	Ambient temperature
Trq_Driver_External	[Nm]	Reference torque for the steering angle calculation
UnitVec_z_CP	[:][x;y;z]	Unit vector in z-direction at the contact point positions

Name	Unit	Description
v_Rel_Fellows	[m/s]	Fellow velocity relative to the ASM vehicle velocity
v_Vehicle_Preview_Ref_Maneuver	[m/s]	Reference signal for a preview speed calculation
v_Vehicle_Ref_Maneuver	[m/s]	Vehicle reference velocity provided by the maneuver
v_Wind_Coor_Sys_E	[x;y;z][m|s]	Velocity of the wind in the earth coordinate system
Width_Deadzone_LatCtrl	[m]	Width of dead zone for lateral deviation from the road reference line
Width_Fellows	[m]	Width of the fellow vehicles
x_Preview_DriverCurv	[m]	Vector of the previewed road positions in the x-direction (earth coordinates) for curvature calculation
y_Preview_DriverCurv	[m]	Vector of the previewed road positions in the y-direction (earth coordinates) for curvature calculation

Animation

The following table shows the ports of the Animation:

Name	Unit	Description
Angle_Fellows	[x;y;z] [deg]	Signal bus containing the orientation of the fellow vehicles
ASM_Vehicle_TurnLights	[]	Signal bus containing the turn light signals
Boundingbox_DetectedObjects	[]	Signal bus containing data related to the bounding boxes detected by the 3D sensor
Distance_MeasPnt_Marker_Left	[m]	Lateral distance from lane sensor position to the left lane marking
Distance_MeasPnt_Marker_Right	[m]	Lateral distance from the lane sensor position to the right lane marking
Flag_FellowUsed	[0|1]	The flag is active if the fellow is used
Line_Sensor	[]	Signal bus containing data from the line sensor
ManeuverState	[]	Maneuver state signal
ManeuverTime	[s]	Time since start of maneuver
MarkerType_Left	[]	Type of the left lane marking. The signal is -1 if there is no marker
MarkerType_Right	[]	Type of the right lane marking. The signal is -1 if there is no marker
Network_Item_Type_Veh	[]	Type of network item at the position of the ASM vehicle
Objects_DataStreams	[]	Data stream to control states in the model

Name	Unit	Description
ObjectSensor2D_1	[]	Signal bus containing data from the front 2-D sensor
ObjectSensor2D_2	[]	Signal bus containing data from the front left 2-D sensor
ObjectSensor2D_3	[]	Signal bus containing data from the left 2-D sensor
ObjectSensor2D_4	[]	Signal bus containing data from the rear left 2-D sensor
ObjectSensor2D_5	[]	Signal bus containing data from the front right 2-D sensor
ObjectSensor2D_6	[]	Signal bus containing data from the right 2-D sensor
ObjectSensor2D_7	[]	Signal bus containing data from the rear right 2-D sensor
ObjectSensor3D_1	[]	Signal bus containing data from the front long-range 3-D sensor
ObjectSensor3D_1_CustomPoints	[]	Signal bus containing custom point data from the front long-range 3-D sensor
ObjectSensor3D_1_RadarEffects	[]	Signal bus containing radar data from the front long-range 3-D sensor
ObjectSensor3D_2	[]	Signal bus containing data from the front mid-range 3-D sensor
ObjectSensor3D_2_CustomPoints	[]	Signal bus containing custom point data from the front mid-range 3-D sensor
ObjectSensor3D_2_RadarEffects	[]	Signal bus containing radar data from the front mid-range 3-D sensor
ObjectSensor3D_3	[]	Signal bus containing data from the rear 3-D sensor
ObjectSensor3D_3_CustomPoints	[]	Signal bus containing custom point data from the rear 3-D sensor
ObjectSensor3D_3_RadarEffects	[]	Signal bus containing radar data from the rear 3-D sensor
Pos_Fellows_MainPnt_CoorSys_E	[x;y;z] [m]	Position of the fellow main point in earth coordinate system
Pos_Left	[x;y;z] [m]	Position of the left lane marking in earth coordinate system at each enabled lane sensor evaluation distance
Pos_Right	[x;y;z] [m]	Position of the right lane marking in earth coordinate system at each

Name	Unit	Description
		enabled lane sensor evaluation distance
s_Veh_Road	[m]	The distance s along the route at the position of the vehicle. Reset to zero after each turn on a closed route
Settings	[]	Settings for the fellow vehicle lights
Sw_BrakeLight	[0|1]	Switch for the brake light: ▪ 0: Off ▪ 1: On
Sw_ManualControl_Lights	[1|2]	Switch which determines if lights are controlled by the MANEUVER_SCHEDULER block or the user interface: ▪ 1: Maneuver Scheduler ▪ 2: Manual
Sw_TurnLights	[0|1|2|3]	Switch for the turn light: ▪ 0: Off ▪ 1: Left ▪ 2: Right ▪ 3: Both
TrafficSign_Sensor_Dyn	[]	Signal bus containing data from the traffic sign sensor
UserSignals_Customized	[]	Customized user signals from the TRAFFIC_SCHEDULER block
v_Fellows	[km/h]	Velocity of fellow vehicles
v_Fellows_Ref_Scheduler	[km/h]	Velocity of fellow vehicles from traffic scheduler. Contains valid values in velocity mode only.
Velocity_MeasPnt_Marker_Left	[m/s]	Velocity from each measurement point towards the left marker in the d-direction
Velocity_MeasPnt_Marker_Right	[m/s]	Velocity from each measurement point towards the right marker in the d-direction
Yaw_Angle_Left	[deg]	Yaw angle of the left lane marking in earth coordinate system
Yaw_Angle_Right	[deg]	Yaw angle of the right lane marking in earth coordinate system

Environment Module

Description

This ASM module is used for ASM Vehicle Dynamics. The ASM Module Environment for ASM Vehicle Dynamics provides the environment for the vehicle model. It contains maneuver and road models.

The maneuver provides driving instructions for accelerating, braking, and steering the vehicle model. The road model provides the connection to the road on which the vehicle model travels.

The following tables show the external inports and outports of the ASM module.

Submodules

The module contains the following submodules:

- Maneuver Submodule on page 396
- Road Submodule on page 399

Inports

The following table shows the ports of the Interface_External_In:

Name	Unit	Description
a_y_Vehicle_CoG	[m/s^2]	Lateral acceleration of vehicle with COG in consideration
Active_CP_VehDyn_Trailer	[]	Vector of all active contact points
Angle_SteeringWheel	[deg]	Steering wheel angle
Angle_SteeringWheel_SteeringSystem	[deg]	Steering wheel angle
Angle_Vehicle_CoorSys_E	[x;y;z][deg]	Vehicle orientation (roll, pitch, yaw)
Coef_RollingRes	[FL;FR;RL;RR][]	Rolling resistance coefficient
Coef_RollingRes_Mean	[]	Coefficient for rolling resistance
CorneringStiffness	[FL;FR;RL;RR] [N]	Cornering stiffness of the tires
Gear	[]	Gear
Mode_Drivetrain	[1|2|3|4|5]	Drivetrain mode: ▪ -5: FF ▪ -4: FF-4WD ▪ -3: RWD ▪ -2: FWD ▪ -1: AWD

Name	Unit	Description
Mode_Transmission	[1|2]	Transmission mode switch: ▪ 1: Manual ▪ 2: Automatic
Pos_AccPedal	[%]	Position of the accelerator pedal
Pos_BrakePedal	[%]	Brake pedal position
Pos_ClutchPedal	[%]	Clutch pedal position
Pos_CP_CoorSys_E	[:][x;y][m]	Position of the contact points in the earth coordinates
Pos_CP_FL_CoorSys_E	[x;y][m]	Position of the front left contact points in the earth coordinates
Pos_CP_FL_Trailer_CoorSys_E	[x;y][m]	Position of trailer front left contact points in earth coordinates
Pos_CP_FL2_Trailer_CoorSys_E	[x;y][m]	Position of trailer front (inner) left contact points in earth coordinates
Pos_CP_FR_CoorSys_E	[x;y][m]	Position of the front right contact points in the earth coordinates
Pos_CP_FR_Trailer_CoorSys_E	[x;y][m]	Position of trailer front right contact points in earth coordinates
Pos_CP_FR2_Trailer_CoorSys_E	[x;y][m]	Position of trailer front (inner) right contact points in earth coordinates
Pos_CP_R2L_CoorSys_E	[x;y][m]	Position of the second rear left contact points in the earth coordinates
Pos_CP_R2L_Trailer_CoorSys_E	[x;y][m]	Position of trailer second rear left contact points in earth coordinates
Pos_CP_R2L2_CoorSys_E	[x;y][m]	Position of second rear (inner) left contact points in earth coordinates
Pos_CP_R2L2_Trailer_CoorSys_E	[x;y][m]	Position of trailer second rear (inner) left

Name	Unit	Description
		contact points in earth coordinates
Pos_CP_R2R_CoorSys_E	[x;y][m]	Position of second rear right contact points in earth coordinates
Pos_CP_R2R_Trailer_CoorSys_E	[x;y][m]	Position of trailer second rear right contact points in earth coordinates
Pos_CP_R2R2_CoorSys_E	[x;y][m]	Position of second rear (inner) right contact points in earth coordinates
Pos_CP_R2R2_Trailer_CoorSys_E	[x;y][m]	Position of trailer second rear (inner) right contact points in earth coordinates
Pos_CP_RL_CoorSys_E	[x;y][m]	Position of the rear left contact points in the earth coordinates
Pos_CP_RL_Trailer_CoorSys_E	[x;y][m]	Position of trailer rear left contact points in earth coordinates
Pos_CP_RL2_CoorSys_E	[x;y][m]	Position of the rear (inner) left contact points in the earth coordinates
Pos_CP_RL2_Trailer_CoorSys_E	[x;y][m]	Position of trailer rear (inner) left contact points in earth coordinates
Pos_CP_RR_CoorSys_E	[x;y][m]	Position of the rear right contact points in the earth coordinates
Pos_CP_RR_Trailer_CoorSys_E	[x;y][m]	Position of trailer rear right contact points in earth coordinates
Pos_CP_RR2_CoorSys_E	[x;y][m]	Position of the rear (inner) right contact points in the earth coordinates
Pos_CP_RR2_Trailer_CoorSys_E	[x;y][m]	Position of trailer rear (inner) right contact points in earth coordinates

Name	Unit	Description
r_Dyn_Tire	[FL;FR;RL;RR] [m]	Dynamic tire radius
r_Dyn_Tire_Mean	[m]	Mean dynamic tire radius
RollRate_Vehicle_CoG	[deg/s]	Vehicle roll rate
RotationMatrix_V_to_E	[1x9]	Rotation matrix to transfrom values from the vehicle to the earth coordinate system
s_Preview	[m]	Vector with preview distances for lateral control and vehicle reference velocity calculation.
s_Vehicle	[m]	Driven distance of the vehicle
SelectorLever	[-3|-2|-1|0|1]	Selector lever position: ▪ -3: TipShift ▪ -2: Park ▪ -1: Reverse ▪ 0: Neutral ▪ 1: Drive
Sw_MasterBrakeCylinder_Mode	[1|2|3]	Master brake cylinder mode: ▪ 1: Modeled linearly ▪ 2: Modeled physically ▪ 3: Brake booster
Sw_Tire_Model	[1|2]	Tire model switch: ▪ 1: TMeasy ▪ 2: Magic Formula
t_Preview_vRef_Driver	[s]	Preview time for the driver model
Trq_SteeringWheel_SteeringSystem	[Nm]	Torque in the steering column
v_x_Vehicle_CoG	[km/h]	Longitudinal vehicle velocity
v_y_Vehicle_CoG	[km/h]	Lateral vehicle velocity at the centre of gravity
YawRate_Vehicle_CoG	[deg/s]	Vehicle yaw rate

Outports

The following table shows the ports of the Interface_External_Out:

Name	Unit	Description
Angle_SteeringWheel_Maneuver	[deg]	Steering wheel angle stimulus from the maneuver scheduler
Angle_Vehicle_Init_CoorSys_E	[x;y;z] [rad]	Initial yaw angle of the ASM vehicle in the earth coordinate system
Angle_Yaw_Veh_Road	[deg]	Yaw angle of the reference line of the road at the current position of the ASM vehicle
a_x_Max	[m/s^2]	Maximum longitudinal acceleration for the reference velocity calculation
a_x_Min	[m/s^2]	Minimum longitudinal acceleration for the reference velocity calculation
a_x_Vehicle_Ref_TrafficDriver	[m/s^2]	Reference acceleration of the ASM vehicle by the traffic driver feature
a_y_Max	[m/s^2]	Maximum lateral acceleration (for velocity calculation in curves)
Const_Steering_Mode_Manual	[1|2]	Controls whether the manual steering mode expects the steering wheel angle or the steering wheel torque: ▪ 1: Steering wheel angle ▪ 2: Steering wheel torque
Curv_Preview_Road	[1/m]	Road curvature at previewed road positions
Curv_Vehicle_Road	[1/m]	Curvature of the road reference line at the current position of the ASM vehicle
d_Vehicle_Road	[m]	Lateral distance of the vehicle regarding the preferred lane
Dist_Border_Left	[m]	Distance from the ASM vehicle reference coordinate system to the left road border
Dist_Border_Right	[m]	Distance from the ASM vehicle reference coordinate system to the right road border
ECU_Commands	[]	ECU commands derived from the customized maneuver user signals

Name	Unit	Description
Enable_v_Init	[0|1]	Flag that indicates if the ASM vehicle simulation has a velocity or then zero
EngOPNum	[]	Engine operating point number
Fric_Coeff_CP	[:][]	Friction coefficients at the contact point positions
Gear_Maneuver	[]	Gear stimulus from the maneuver
Gear_Max	[0Off|1_n]	Gear set point defined by maneuver input
Keep_VehiclePosition	[0|1]	Flag to disable all integrators in the model in order to keep the vehicle at its current position
Mode_AcceleratorBrake	[1|2]	Controls whether accelerator and brake pedal positions are stimulus signals or controlled by the driver: ▪ 1: Stimulus signals ▪ 2: Controlled by driver
Mode_AdaptVelocityToRoad	[1|2]	Controls whether the reference velocity calculation on roads is active: ▪ 1: Off ▪ 2: On
Mode_CurvatureCalculation	[1|2]	Specifies the curvature calculation mode: ▪ 1: Road ▪ 2: Driver
Mode_ForceToRoad	[1|2]	Controls the limitation to valid lane indices: ▪ 1: Off ▪ 2: On
Mode_GearClutch	[1|2|3|4]	Switch for the mode signal the of gear and clutch pedal source: ▪ 1: Stimulus ▪ 2: Driver ▪ 3: Open clutch ▪ 4: Reference gear
Mode_LatCtrl	[1|2]	Lateral control type: ▪ 1: Pos ▪ 2: Yaw
Mode_RelativeLane	[0|1]	Controls the interpretation of the lane index in the road calculation: ▪ 0: Center lane

Name	Unit	Description
		▪ 1: Preferred lane
Mode_Road	[1|2|3|4]	Controls whether vehicle travels on a flat area, on a straight or circular road or on the road that is created with the ModelDesk Road Generator: ▪ 1: No road ▪ 2: Straight road ▪ 3: Circular road ▪ 4: Road from Road Generator
Mode_SelectorLever	[1|2]	Switch for the mode signal of the selector lever source: ▪ 1: Stimulus ▪ 2: Driver
Mode_StartButtonState	[1|2]	Controls whether the signal for the activation of the start button is calculated by the soft ECU or provided by a stimulus signal: ▪ 1: Stimulus ▪ 2: Soft ECU
Mode_Steer	[1|2|3]	Controls whether the steering wheel angle is controlled by the stimulus signal or by the driver: ▪ 1: Stimulus ▪ 2: Driver ▪ 3: Fix
Mode_TrafficDriver	[1|2]	Controls the Traffic Driver mode of the ASM vehicle: ▪ 1: Off ▪ 2: On
n_Engine_Set	[rpm]	Setpoint for the speed of combustion engine
p_Ambient	[Pa]	Ambient pressure
Pitch_Preview_Road	[deg]	Pitch angle of the road at the positions of the preview points
Pos_AccPedal_Maneuver	[%]	Accelerator pedal position stimulus from the maneuver scheduler
Pos_BrakePedal_Maneuver	[%]	Brake pedal position stimulus from the maneuver scheduler
Pos_ClutchPedal_Maneuver	[%]	Clutch pedal position stimulus from the maneuver scheduler

Name	Unit	Description
Pos_Vehicle_Init_CoorSys_E	[x;y;z][m]	Initial position of the ASM vehicle in the earth coordinate system
Pos_x_Preview_Road	[m]	Vector of the previewed road positions in x-direction (earth coordinates
Pos_x_Ref_Vehicle_Road	[m]	x-position of the reference line of the road at the current position of the vehicle
Pos_y_Preview_Road	[m]	Vector of previewed road positions in y-direction (earth coordinates)
Pos_y_Ref_Vehicle_Road	[m]	y-position of the reference line of the road at the current position of the vehicle
Pos_z_CP	[:][m]	Z-position of the contact points
Pos_z_Preview_Road	[m]	Vector of the previewed road positions in the z-direction (earth coordinates)
q_dt_Vehicle_Init	[6x1]	Vector signal with the initial velocity and angular velocity of the ASM vehicle
Reset_VehicleStates	[0|1]	Reset signal from the maneuver scheduler
Roll_Preview_Road	[deg]	Roll angle of the road at the positions of the preview points
Route_Direction_Init	[]	Direction on the route for the all fellow vehicles
SelectorLever_Maneuver	[-3|-2|-1|0|1]	Selector lever position from the maneuver: ▪ -3: TipShift ▪ -2: Park ▪ -1: Reverse ▪ 0: Neutral ▪ 1: Drive
Slope_Veh_Road	[%]	Slope of the road at the current distance s of the vehicle
Speed_Limit_Preview_Road	[km/h]	Speed limit as defined in the scenery section of the road element at the position of the ASM vehicle
s_Total_Vehicle_Road	[m]	The total distance along the route
s_Vehicle_Init	[m]	Initial distance s along the road

Name	Unit	Description
s_Vehicle_Road	[m]	The distance s along the route at the position of the vehicle. Reset to zero after each turn on a closed route
State_StartButton	[-1P|0|1|2]	State of the start button: ▪ -1: Power off ▪ 0: Acceleration ▪ 1: Power on ▪ 2: Starter on
Sw_LatDriver	[1|2]	Controls whether lateral_control1 or lateral_control2 is active: ▪ 1: Lateral_control 1 active ▪ 2: Lateral_control 2 active
Sw_ParkingBrake	[0|1]	Controls the parking brake: ▪ 0: Off ▪ 1: On
Sw_StartButton	[0|1]	Start button actuation input: ▪ 0: Off ▪ 1: On
Sw_Steering_Mode	[1|2]	Controls whether the steering angle is determined by the maneuver or manually: ▪ 1: Manual ▪ 2: Maneuver Scheduler
Sw_SteeringMode	[1|2]	Controls the steering angle calculation method (torque or angle): ▪ 1: Angle ▪ 2: Torque
Sw_Testbench	[0|1]	Switch to activate the test bench: ▪ 0: Off ▪ 1: On
Sw_Tire_Parameter_Set_CP	[:][1|2|3|4]	Controls the used tire parameter set
Sw_TipShift_Maneuver	[-1|0|1]	TipShift requests the stimulus signal from the maneuver: ▪ -1: Down shift ▪ 0: Off ▪ 1: Up shift
T_Ambient	[°C]	Ambient temperature
Trq_Driver_External	[Nm]	Reference torque for the steering angle calculation

Name	Unit	Description
UnitVec_z_CP	[:][x;y;z]	Unit vector in z-direction at the contact point positions
x_Preview_DriverCurv	[m]	Vector of the previewed road positions in the x-direction (earth coordinates) for curvature calculation
v_Vehicle_Preview_Ref_Maneuver	[m/s]	Reference signal for the preview speed calculation
v_Vehicle_Ref_Maneuver	[m/s]	Vehicle reference velocity provided by the maneuver
v_Wind_Coor_Sys_E	[x;y;z][m|s]	Velocity of the wind in the earth coordinate system
Width_Deadzone_LatCtrl	[m]	Width of the dead zone for lateral deviation from road reference line
y_Preview_DriverCurv	[m]	Vector of the previewed road positions in the y-direction (earth coordinates) for the curvature calculation

Animation

The following table shows the ports of the Animation:

Name	Unit	Description
ASM_Vehicle_TurnLights	[]	Signal bus containing the turn light signals
Distance_MeasPnt_Marker_Left	[m]	Lateral distance from the lane sensor position to the left lane marking
Distance_MeasPnt_Marker_Right	[m]	Lateral distance from the lane sensor position to the right lane marking
ManeuverState	[]	Maneuver state signal
ManeuverTime	[s]	Time since start of maneuver
MarkerType_Left	[]	Type of the left lane marking. The signal is -1 if there is no marker
MarkerType_Right	[]	Type of the right lane marking. The signal is -1 if there is no marker
Network_Item_Type_Veh	[]	Type of network item at the position of the ASM vehicle
Objects_DataStreams	[]	Data stream to control states in the model
Pos_Left	[x;y;z] [m]	Position of the left lane marking in earth coordinate system at each

Name	Unit	Description
		enabled lane sensor evaluation distance
Pos_Right	[x;y;z] [m]	Position of the right lane marking in earth coordinate system at each enabled lane sensor evaluation distance
s_Veh_Road	[m]	The distance s along the route at the position of the vehicle. Reset to zero after each turn on a closed route
Sw_BrakeLight	[0|1]	Switch for the brake light: ▪ 0: Off ▪ 1: On
Sw_ManualControl_Lights	[1|2]	Switch that determines if the lights are controlled by the MANEUVER_SCHEDULER block or the user interface: ▪ 1: Maneuver ▪ 2: Manual
Sw_TurnLights	[0Off| 1Left| 2Right| 3Both]	Switch for the turn light: ▪ 0: Off ▪ 1: Left ▪ 2: Right ▪ 3: Both
Velocity_MeasPnt_Marker_Left	[m/s]	Velocity from each measurement point towards the left marker in d-direction
Velocity_MeasPnt_Marker_Right	[m/s]	Velocity from each measurement point towards the right marker in the d-direction
Yaw_Angle_Left	[deg]	Yaw angle of the left lane marking in earth coordinate system
Yaw_Angle_Right	[deg]	Yaw angle of the right lane marking in the earth coordinate system

Hall Encoder Module

Description

This ASM module consists of a Hall encoder (Hall Encoder on page 79). It generates the typical Hall encoder signals used to control a brushless DC machine by sensing the rotor position and by switching the power devices in the right sequence.

The following tables show the external inports and outports of the ASM module.

Inports Plant

The following table shows the ports of the Interface_External_In:

Name	Unit	Description
Ctrl_mode_SW	[1|2|3]	Switch between the control modes. ▪ 1: Speed control ▪ 2: Current control ▪ 3: Voltage control
n_Engine	[rpm]	Motor speed
Reset	[0|1]	Reset the integrators to their initial conditions

Outports Plant

The following table shows the ports of the Interface_External_Out:

Name	Unit	Description
Hall_Signals[a;b;c]	[0|1]	Hall signals (phase a;b;c)
n_Engine	[rpm]	Motor speed
theta	[rad]	Motor mechanical angle

Torque Manager P2 Module

Description

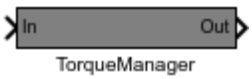

A conventional vehicle is usually propelled by an ICE. The driver determines the desired ICE state by using the ignition key to give start or stop commands or by using the accelerator to choose the target torque. The driver uses the brake pedal to reduce the vehicle's kinetic energy.

Hybrid vehicles are propelled by both the ICE and the EM. The EM can be operated in generator or motor mode. The vehicle is slowed down by the EM and by a brake system.

An additional electronic control unit, the hybrid manager, is introduced to optimally coordinate the ICE, the EM, the brake system, and other components.

The following illustration gives a functional overview of the structure of a hybrid manager. Only the most important signals are shown (in italics) due to the

complexity of the model. The input and output signals are color-coded according to their source (blue) and destination (red). For example, EM (blue) indicates that the signals are generated by the EM model; EM (red) indicates that the signals are passed to the EM model.

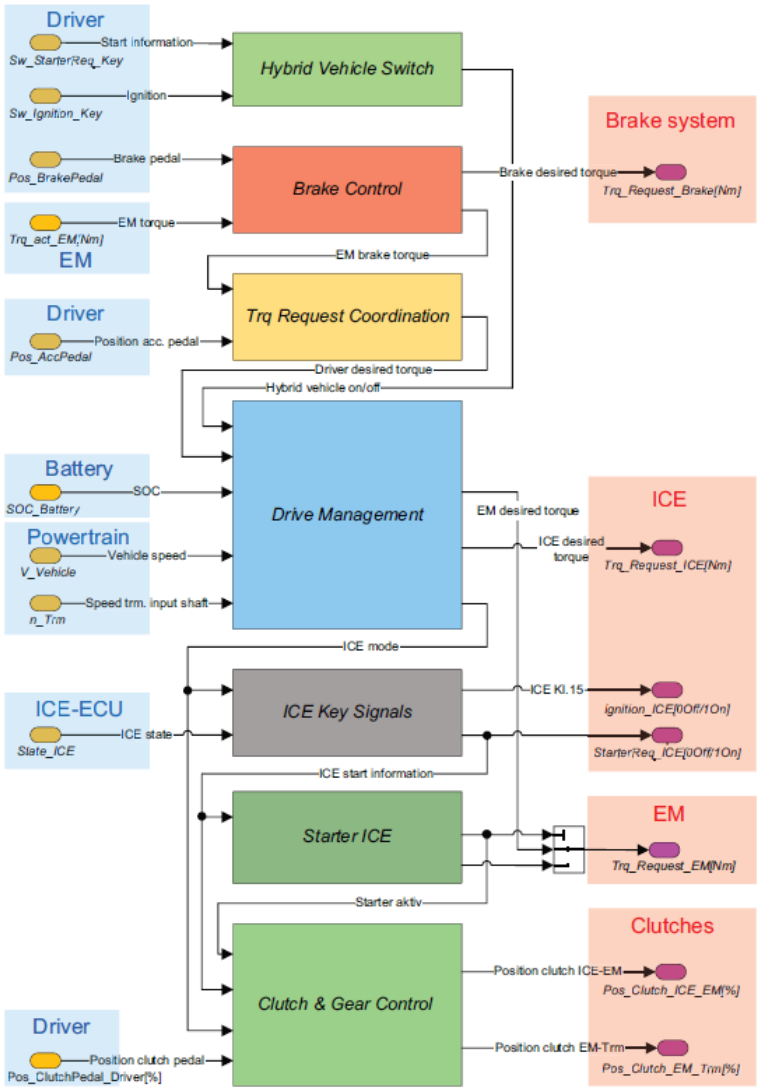

The components of the hybrid manager generate the ignition switch signals and the starter management for the ICE, to decelerate the vehicle via recuperation and standard brake, to calculate the torque requests for the ICE and the EM, and to control the clutches between the ICE, the EM, and the transmission.

The hybrid manager has the following compnents:

- Key signals ICE (refer to Key Signals ICE on page 141)
- Starter ICE (refer to Starter ICE on page 143)
- Brake control (refer to Brake Control on page 134)

- Torque request coordination (refer to Torque Request Coordination on page 145)
- Drive management (refer to Drive Management on page 137)
- Clutch control (refer to Clutch Control on page 136)
- Hybrid vehicle switch (refer to Hybrid Vehicle Switch on page 143)

Mode shift strategy for the ICE (ICE modes)

There are different requirements for starting and stopping the ICE. The following illustration shows the state machine in the hybrid manager's Drive Management submodel which selects the ICE state.

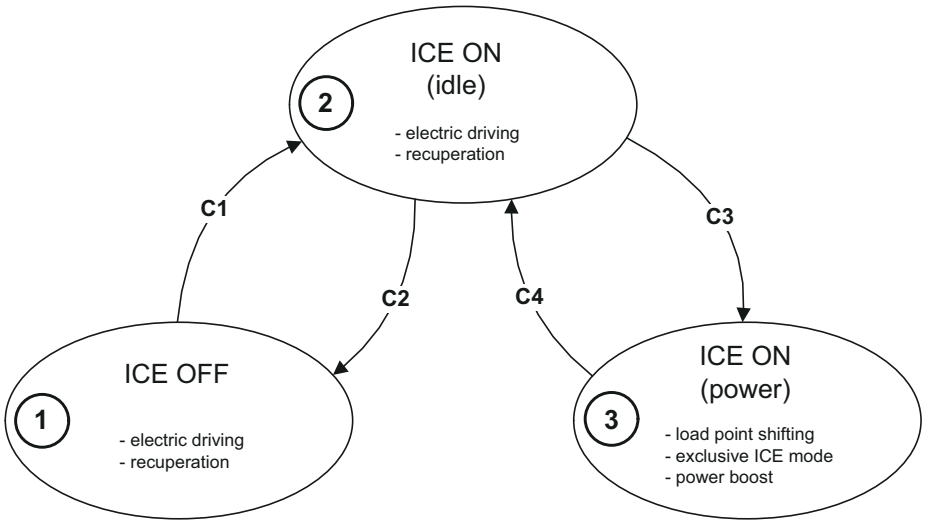

The factors engine temperature, ICE running time, and driving resistance only influence transition condition C2 and avoid an early stop of the ICE. The transmission input speed is no direct influencing factor. It is used for interim calculations, e.g., to identify the maximum EM torque as a function of the rotational speed.

Transition condition of the ICE modes

The transition conditions C1, C2, C3, and C4 have to be fulfilled to switch modes. See the following descriptions.

Transition condition C1: switch ICE mode from OFF to ON (idle) The engine is to be started when:

- The drive power of the EM is not sufficient to overcome driving resistances (slope resistance, rolling resistance, air resistance)
- OR the battery temperature exceeds a critical value and the EM must no longer put load on the battery
- OR the driver issues a manual start request
- OR the ICE cools down too much, so the coolant temperature falls below a minimum temperature

- OR the state of charge and the requested torque make it impossible to reach a starting threshold
- AND the hybrid vehicle is running.

Transition condition C2: switch ICE mode from ON (idle) to OFF The engine is to be turned off when:

- 80% of the EM's drive power are sufficient to overcome driving resistances (slope resistance, rolling resistance, air resistance)
- AND the battery temperature is well below a critical value, so that the EM is allowed to put load on the battery
- AND the driver does not request a manual start
- AND the ICE has already reached a certain engine temperature
- AND the state of charge and the requested torque make it possible to exceed a starting threshold
- AND the minimum running time of the ICE, which avoids repeated on- and off-switching, has passed
- OR the hybrid vehicle is being turned off.

Transition condition C3: switch ICE mode from ON (idle) to ON (power) The engine is to be under power when

- The battery temperature exceeds a critical value and the EM must no longer put load on the battery
- OR the state of charge and the requested torque make it impossible to reach a starting threshold
- AND the hybrid vehicle is running.

Transition condition C4: switch ICE mode from ON (power) to ON (idle) The engine is to be turned off when the following applies:

- The battery temperature is well below a critical value, so that the EM can put load on the battery
- the state of charge and the requested torque make it possible to exceed a starting threshold.
- OR the hybrid vehicle is being turned off

Conditions of the ICE modes

The conditions are defined as follows:

Driving resistances The driving resistances are slope resistance, rolling resistance, and air resistance. The torque required to overcome the driving resistances is compared to the EM's maximum torque. When the EM torque is low, the ICE remains on. The position of the accelerator pedal (requested torque) is the main factor determining the number of start and stop processes of the ICE, because the other influencing factors are rather inert. The accelerator pedal is usually released somewhat after overtaking another vehicle, when there is a speed limit, or the driver enters a curve; the ICE could be turned off due to the low requested torque. When the EM torque is insufficient, the ICE has to be

restarted shortly to maintain the speed. The driving resistances are estimated to avoid this process.

Battery temperature The temperature in lithium-ion batteries must not exceed 40 °C, because this temperature is considered critical for the simulation. If the temperature exceeds the critical value, the ICE mode ICE (power) is engaged, because the transition conditions C1 and C3 are met. A temperature hysteresis is introduced into the simulation, so the ICE is not repeatedly turned off and on. The battery temperature changes very slowly due to the battery's great heat capacity. Therefore, 5 °C are considered a sufficient hysteresis. The battery model is run with a fixed ambient temperature. A series of simulations with different drive cycles has not caused the temperature to rise above the maximum temperature of 40 °C.

ICE temperature In order to conserve the ICE, it is turned off only when a minimum temperature has been reached. The ICE remains on up to a coolant temperature of 80° C, because the coolant temperature is not to fall below 70° C. In OFF mode, the ICE is restarted when the coolant temperature falls below 70° C.

Minimum running time A minimum running time of 15 s is recommended. Otherwise, turning the ICE off and on could be perceived as hectic.

ICE state as a tradeoff between battery charge status and relative desired torque The EM or the ICE can propel the vehicle up to a low or medium requested torque. Electric driving is limited by the maximum available torque. The EM discharges the battery; the ICE usually recharges it in the load point shifting mode. It is energy-efficient to use the EM for small drive torques. When the battery capacity is low, the battery should be charged by the ICE (load point shifting mode). Selecting either electric driving with the load point mode or exclusive ICE mode is a tradeoff between battery capacity and energy efficiency. A turn-on and turn-off characteristic curve is developed to reach an acceptable tradeoff. The battery charge state and the relative available drive torque are considered in designing the curve. The requirements for the curve are explained below.

Requirements for the turn-on and turn-off curve Several areas are defined in which either the current state is to be maintained or the ICE is to be turned on, or turned off.

There are priorities for the requirements, so a tradeoff can be achieved immediately upon drawing the first characteristic curve.

1. In order to conserve battery power and to always have sufficient energy for the power boost, battery capacity must not fall below 10%. Priority: ICE must be turned on.
2. If the relative EM torque is greater than 100%, the EM torque is insufficient. Priority: ICE must be turned on.
3. If the relative EM torque is greater than 80%, the EM will soon be insufficient. Priority: Turning on the ICE is recommended.
4. Ensure to keep a certain amount of storage capacity available for recuperation to ensure energy efficiency. Priority: Turning on the EM is recommended.

5. For reasons of energy efficiency and to avoid the ICE's bad partial load area, it is recommended to use the EM in the lower 20%. Priority: Turning on the EM is highly recommended (not obligatory).
6. The state of charge (SOC) is to range between 40% and 60% if possible. Priority: Recommended to consider when designing the characteristic curve.
7. The hysteresis should be as large as possible to avoid a repeated change of ICE mode. Priority: medium to high.

These points are taken into account when designing the turn-on curve for requirements C1 and C3 and the turn-off curve for C2 and C4.

The following illustration shows the state of internal combustion engine as a function of battery status and the driver's desired torque.

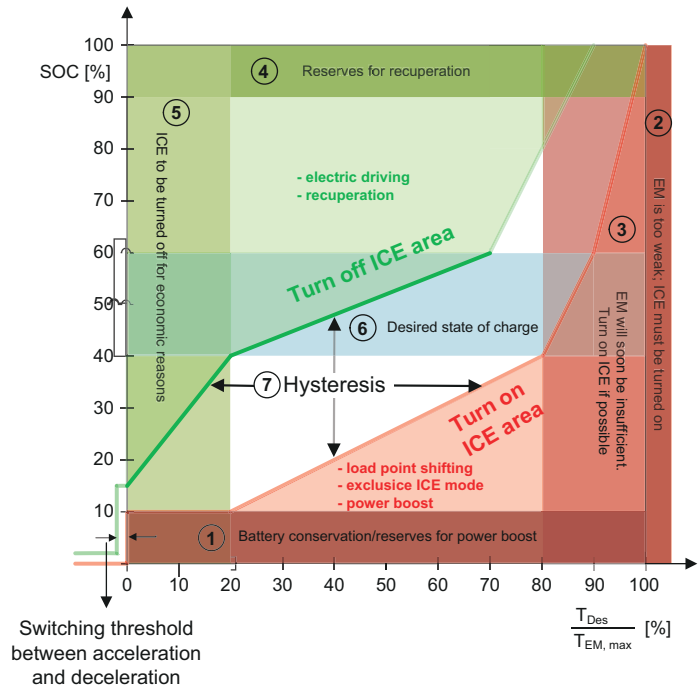

where:

SOC	is the state of charge [%]
T_{DES}	is the required drive torque [Nm]
$T_{EM,\ max}$	is the maximum electric motor torque [Nm]

Mode shift strategy of hybrid manager (hybrid modes)

There are different hybrid modes. For details on the modes, refer to Drive Management on page 137.

In the following, the criteria used to select a hybrid mode are described. The hybrid modes are subordinate to the ICE modes. In the ICE modes OFF or ON (idle), the vehicle is propelled exclusively by the EM. In the ON (power) ICE mode, the vehicle is propelled mainly by the ICE, which can be used in combination with the EM.

The following illustration displays state diagrams indicating the link between ICE modes and hybrid modes. For the transition conditions C1, C2, C3, and C4 of the ICE modes, refer to Transition condition of the ICE modes on page 324.

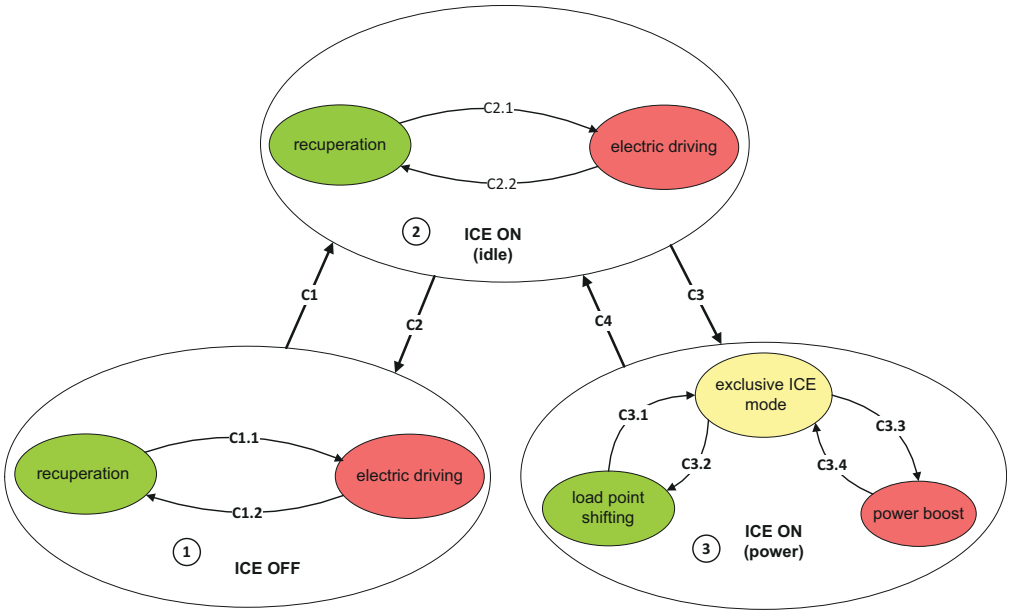

Transition conditions of the hybrid modes

Transition condition C1.1 or C2.1 to switch the hybrid mode from recuperation to electric driving The condition is met when:

- The requested torque is positive (brake pedal is in its default position).

Transition condition C1.2 or C2.2 to switch the hybrid mode from electric driving to recuperation The condition is met when:

- The requested torque is negative (the brake pedal is used).

Transition condition C3.1 to switch the hybrid mode from load point shifting to exclusive ICE mode The condition is met when:

- The battery temperature exceeds a critical value and the EM must no longer put load on the battery.
- OR the battery's state of charge (SOC) exceeds a value of approximately 90% (reserves for recuperation are required).
- OR the requested torque is too high to achieve power-specific efficiency.

Transition condition C3.2 to switch the hybrid mode from exclusive ICE mode to load point shifting The condition is met when:

- The battery temperature is significantly below a critical value and the EM is allowed to put load on the battery.
- AND the battery's state of charge is well below a value of approximately 90% (reserves for recuperation have been observed).
- AND the requested torque is far too small to achieve power-specific efficiency.

Transition condition C3.3 to switch the hybrid mode from exclusive ICE mode to power boost The condition is met when:

- The battery temperature is significantly below a critical value and the EM is allowed to put load on the battery
- AND the battery's state of charge exceeds a value of approximately 5% needed for battery conservation, reserves for electronic auxiliary units such as air conditioning, radio, electric power steering etc.
- AND the requested torque is above the maximum available ICE torque.

Transition condition C3.4 to switch the hybrid mode from power boost to exclusive ICE mode The condition is met when:

- The battery temperature exceeds a critical value and the EM must no longer put load on the battery.
- OR the battery's state of charge is below a value of approximately 5% required for battery conservation, reserves for electronic auxiliary units such as air conditioning, radio, electric power steering etc.
- OR the requested torque is below the maximum available ICE torque.

Inports

The following table shows the ports of the Interface_External_In:

Name	Unit	Description
Sw_Ignition	[0|1]	Ignition signal - terminal 15 ▪ 0: Off ▪ 1: On
Sw_StarterReq	[0|1]	Starter request signal (usually sent to engine ECU) ▪ 0: Off ▪ 1: On
Enable_TrqDecrease_Fast_ESP	[0|1]	Enable torque decrease fast ESP
Trq_DecreaseRequest_Fast_ESP	[Nm]	Torque decrease request fast ESP
Enable_Trq_Decrease_ACC	[0|1]	Enable torque decrease ACC
Trq_DecreaseRequest_ACC	[Nm]	Torque decrease request ACC
Enable_Trq_Increase_ACC	[0|1]	Enable torque increase ACC
Trq_IncreaseRequest_ACC	[Nm]	Torque decrease request ACC
Pos_AccPedal	[%]	Position of the accelerator pedal
Pos_BrakePedal	[%]	Brake pedal position
Pos_ClutchPedal_EM_Trm	[%]	Position of clutch pedal of clutch between EM and transmission
Reset	[0|1]	Reset integrators to their initial conditions
v_Vehicle	[km/h]	Vehicle velocity
i_FinalDrive	[]	Total transmission ratio of final driveline (between transmission output and wheel speed
Trq_EM	[Nm]	Torque EM

Name	Unit	Description
Trq_Max_Brake	[Nm]	Maximum brake torque
V_DCLink	[V]	DC Link voltage
V_Bat	[V]	Battery voltage
SOC_Bat	[%]	Battery state of charge
T_Mean_Bat	[°C]	Mean battery temperature
State_ICEngine	[0|1|2|3|4]	ICE state ▪ 0: Off or Error ▪ 1: Ignition on ▪ 2: Starter on ▪ 3: Running ▪ 4: Shutdown
i_unsync_Trm	[]	Unsynchronized transmission ratio
omega_EM	[rad/s]	EM speed in rad/s
omega_In_Trm	[rad/s]	Transmission input speed
F_Driving_Res	[N]	Sum of the driving resistances acting on the vehicle
T_Coolant_ICE	[°C]	Temperature of the engine coolant
ESP_Mode	[0|1|2|3]	Mode ESP ▪ 0: None ▪ 1: ABS ▪ 2: ESP ▪ 3: ASR

The following table shows the interface to connect an external ECU (real ECU):

Name	Unit	Description
Pos_Clutch_ICE_EM	[%]	Position clutch between ICE and EM
Pos_Clutch_EM_Trm	[%]	Position clutch between EM and transmission
Pos_BrakePedal_Desired	[%]	Desired brake pedal position
Trq_Request_ICE	[Nm]	Torque request ICE
Trq_Request_EM	[Nm]	Torque request EM
Ignition_ICE	[0|1]	Ignition ICE ▪ 0: Off ▪ 1: On
StarterReq_ICE	[0|1]	Starter request ICE ▪ 0: Off ▪ 1: On
HybridMode_Vehicle	[0|1|2|3|4|5]	Hybrid mode vehicle ▪ 0: Load point shift ▪ 1: ICE ▪ 2: Power boost ▪ 3: EC ▪ 4: Recuperation

Name	Unit	Description
		▪ 5: Error
HybridMode_ICE	[0|1|2|3]	Hybrid mode of the combustion engine ▪ 0: ICE off ▪ 1: ICE on, idle ▪ 2: ICE on, power ▪ 3: Error
Trq_Request_Brake	[Nm]	Torque request brake
Sw_DCLink	[0|1]	Switch DC link ▪ 0: Off ▪ 1: On
State_DCLink	[0|1]	State DC link ▪ 0: Off ▪ 1: On
State_HybridEngine	[0|1|2|3|4]	Hybrid engine state: ▪ 0: Stop ICE ▪ 1: Start ICE ▪ 2: Generator ▪ 3: Recuperation ▪ 4: Boost

Outports

The following table shows the ports of the Interface_External_Out:

Name	Unit	Description
Pos_Clutch_ICE_EM	[%]	Position clutch between ICE and EM
Pos_Clutch_EM_Trm	[%]	Position clutch between EM and transmission
Pos_BrakePedal_Desired	[%]	Desired brake pedal position
Trq_Request_ICE	[Nm]	Torque request ICE
Trq_Request_EM	[Nm]	Torque request EM
Ignition_ICE	[0|1]	Ignition ICE ▪ 0: Off ▪ 1: On
StarterReq_ICE	[0|1]	Starter request ICE ▪ 0: Off ▪ 1: On
HybridMode_Vehicle	[0|1|2|3|4|5]	Hybrid mode vehicle ▪ 0: Load point shift ▪ 1: ICE ▪ 2: Power boost ▪ 3: EC ▪ 4: Recuperation ▪ 5: Error

Name	Unit	Description
HybridMode_ICE	[0|1|2|3]	Hybrid mode of the combustion engine ▪ 0: ICE off ▪ 1: ICE on, idle ▪ 2: ICE on, power ▪ 3: Error
Trq_Request_Brake	[Nm]	Torque request brake
Sw_DCLink	[0|1]	Switch DC link ▪ 0: Off ▪ 1: On
Mode_BSG	[-1|0|1|2|3|4|5]	Mode of the belt-driven starter generator (BSG): ▪ -1: Not available ▪ 0: Stop combustion engine ▪ 1: Start combustion engine ▪ 2: Generator ▪ 3: Recuperation ▪ 4: Boost ▪ 5: Idle
Sw_DriveMode	[0|1|2]	Drive mode ▪ 0: Hybrid ▪ 1: ICE only ▪ 2: EM only
State_DCLink	[0|1]	State DC link ▪ 0: Off ▪ 1: On
State_Engine	[0|1|2|3|4]	Engine state: ▪ 0: Engine off ▪ 1: Ignition on ▪ 2: Ignition on and starter activated ▪ 3: Engine is running ▪ 4: Ignition is switched off, shutdown active
Vehicle_Topology	[-2|-1|0|2]	Vehicle topology: ▪ -2: EM only ▪ -1: ICE only ▪ 0: P0 hybrid ▪ 2: P2 hybrid

Related topics

References

Brake Control..... 134
Clutch Control..... 136
Drive Management..... 137
Hybrid Vehicle Switch..... 143
Key Signals ICE..... 141

Starter ICE..... 143
Torque Request Coordination..... 145

Mechanics Module

Description

This ASM module consists of an ENGINE_INERTIA block to simulate the mechanics of an engine inertia. Refer to Engine Inertia on page 147.

The following tables show the external inports and outports of the ASM module.

Inports Plant

The following table shows the ports of the Interface_External_In:

Name	Unit	Description
Ctrl_mode_SW	[1|2|3|4]	Switch between the control modes: ▪ 1: Speed control ▪ 2: Current control ▪ 3: Voltage control ▪ 4: Torque control
Trq_Engine	[Nm]	Motor torque

The following table shows the interface to connect an external ECU (real ECU):

Name	Unit	Description
Trq_Load	[Nm]	Load torque

Outports Plant

The following table shows the ports of the Interface_External_Out:

Name	Unit	Description
n_Engine	[rpm]	Motor speed
Reset	[0|1]	Reset integrators to their initial conditions

Related topics

References

Engine Inertia..... 147

Rectifier Module

Description

This ASM module consists of a three-phase power supply model (Three-Phase Power Supply on page 119) and a three-phase rectifier (Three-Phase Rectifier on page 75) as well as a DC link model (DC Link on page 115) used as the power supply for the system.

The following tables show the external inports and outports of the ASM module.

Inports Plant

The following table shows the ports of the Interface_External_In:

Name	Unit	Description
Ctrl_mode_SW	[1|2|3]	Switch between the control modes: ▪ 1: Speed control ▪ 2: Current control ▪ 3: Voltage control
I_DCLink	[A]	DC Link current
Reset	[0|1]	Reset integrators to their initial conditions

Outports Plant

The following table shows the ports of the Interface_External_Out:

Name	Unit	Description
V_DCLink	[V]	DC Link voltage

Related topics

References

DC Link 115
Three-Phase Power Supply 119
Three-Phase Rectifier 75

Resolver Module

Description

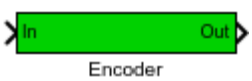

This ASM module consists of an ENGINE_POSITION block to simulate the angular information or the position of an engine shaft. Refer to Engine Position on page 149.

The following tables show the external inports and outports of the ASM module.

Inports Plant

The following table shows the ports of the Interface_External_In:

Name	Unit	Description
Ctrl_mode_SW	[1|2|3|4]	Switch between the control modes: ▪ 1: Speed control ▪ 2: Current control ▪ 3: Voltage control ▪ 4: Torque control
n_Engine	[rpm]	Motor speed
Reset	[0|1]	Reset integrators to their initial conditions

Outports Plant

The following table shows the ports of the Interface_External_Out:

Name	Unit	Description
n_Engine	[rpm]	Motor speed
theta	[rad]	Motor mechanical angle

Related topics

References

Engine Position..... 149

Supercapacitor Module

Description

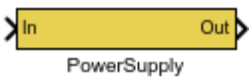

This ASM module consists of a voltage controller and supercapacitor model (Supercapacitor on page 118). The DC link voltage is controlled by a PI controller (PI Controller on page 25) according to its reference by setting the input current. Here, it is used as the power supply for the system.

The following tables show the external inports and outports of the ASM module.

Inports Control

The following table shows the ports of the Interface_External_In:

Name	Unit	Description
Ctrl_mode_SW	[1|2|3|4]	Switch between the control modes: ▪ 1: Speed control ▪ 2: Current control ▪ 3: Voltage control ▪ 4: Torque control
Reset	[0|1]	Resets the integrators to their initial conditions

The following table shows the interface to connect an external ECU (real ECU):

Name	Unit	Description
I_DCLink_Set	[A]	Sets the DC Link current
T_Sample	[s]	Sample time

Inports Plant

The following table shows the ports of the Interface_External_In:

Name	Unit	Description
Ctrl_mode_SW	[1|2|3|4]	Switch between the control modes: ▪ 1: Speed control ▪ 2: Current control ▪ 3: Voltage control ▪ 4: Torque control
I_DCLink	[A]	DC Link current
Reset	[0|1]	Resets the integrators to their initial conditions

Outports Plant

The following table shows the ports of the Interface_External_Out:

Name	Unit	Description
V_DCLink	[V]	DC Link voltage

Related topics

References

PI Controller 25
Supercapacitor 118

Supercapacitor (3LI) Module

Description

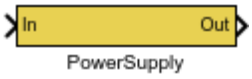

This ASM module consists of a voltage controller and supercapacitor (Supercapacitor on page 118) model. The DC link voltage is controlled by a PI controller (PI Controller on page 25) according to its reference by setting the input current. Here, it is used as the power supply for the system.

The following tables show the external inports and outports of the ASM module.

Inports Control

The following table shows the ports of the Interface_External_In:

Name	Unit	
Ctrl_mode_SW	[1|2|3|4]	Switch between the control modes: ▪ 1: Speed control ▪ 2: Current control ▪ 3: Voltage control ▪ 4: Torque control
Reset	[0|1]	Reset integrators to their initial conditions

The following table shows the interface to connect an external ECU (real ECU):

Name	Unit	Description
I_DCLink_Set	[A]	Set DC Link current
T_Sample	[s]	Sample time

Inports Plant

The following table shows the ports of the Interface_External_In:

Name	Unit	Description
Ctrl_mode_SW	[1|2|3|4]	Switch between the control modes: ▪ 1: Speed control ▪ 2: Current control ▪ 3: Voltage control ▪ 4: Torque control
I_DCLink_H	[A]	High side DC Link current
I_DCLink_L	[A]	Low side DC Link current
I_DCLink_M	[A]	Neutral point DC Link current
Reset	[0|1]	Reset integrators to their initial conditions

Outports Plant

The following table shows the ports of the Interface_External_Out:

Name	Unit	Description
V_DCLink	[V]	DC Link voltage
V_DCLink[H;M;L]	[V]	DC Link voltage of the high and low side and the neutral point

Related topics

References

PI Controller 25
Supercapacitor 118

Starter Module

Description

This ASM module simulates a starter as battery-driven DC motor for gearing up the engine to speeds at which it has to be cranked. As the engine cranks and runs up to speed, it spins the shaft faster than the starter does. To prevent this, an overrunning clutch is installed between the pinion and the armature shaft. This breaks the connection between them as soon as the engine overtakes the starter. Refer to Starter on page 171.

The following tables show the external inports and outports of the ASM module.

Inports Plant

The following table shows the ports of the Interface_External_In:

Name	Unit	Description
n_Engine	[rpm]	Starter speed
Reset	[0|1]	Resets the integrators to their initial conditions
V_Bat	[V]	Battery voltage

Outports Plant

The following table shows the ports of the Interface_External_Out:

Name	Unit	Description
I_Starter	[A]	Starter current
Inertia_Starter	[kg m^2]	Starter inertia
Trq_Starter	[Nm]	Starter torque

Start System Module

Description

The StartSystem module contains models responsible for switching the engine on and off. It is mainly an ECU which responds to the user actuation request and sends the corresponding instructions to the engine ECU to start or turn off the engine.

The following tables show the external inports and outports of the ASM module.

Inports Control

The following table shows the ports of the Interface_External_In:

Name	Unit	Description
Mode_StartButtonState	[1|2]	Controls whether the signal for the activation of the start button is calculated by the soft ECU or provided by a stimulus signal ▪ 1: By Stimulus signal ▪ 1: By Soft ECU
Mode_Transmission	[1|2]	Transmission mode switch ▪ 1: Manual ▪ 2: Automatic
Pos_BrakePedal	[%]	Brake pedal position
Pos_ClutchPedal	[%]	Clutch pedal position
Reset_States	[0|1]	Reset states
SelectorLever	[-3|-2|-1|0|1]	Selector lever position ▪ -3: TipShift ▪ -2: Park ▪ -1: Reverse ▪ 0: Neutral ▪ 1: Drive
State_Engine	[0|1|2|3|4]	Engine state ▪ 0: Engine off ▪ 1: Ignition on ▪ 2: Ignition on and starter activated ▪ 3: Engine is running ▪ 4: Ignition is switched off, shutdown active
State_StartButton	[-1|0|1|2]	State of the start button ▪ -1: Power off ▪ 0: Accessory on ▪ 1: Power on ▪ 2: Starter on

Name	Unit	Description
Sw_CrankShaft_Reset	[0|1]	Crankshaft reset switch ▪ 0: Disabled ▪ 1: Enabled
Sw_StartButton	[0|1]	Start button actuation input ▪ 0: Off ▪ 1: On

The following table shows the interface to connect an external ECU (real ECU):

Name	Unit	Description
Sw_Ignition	[0|1]	Ignition signal - terminal 15
Sw_StarterReq	[0|1]	Starter request signal (usually sent to engine ECU): ▪ 0: Off ▪ 1: On

Outports Control

The following table shows the ports of the Interface_External_Out:

Name	Unit	Description
Sw_Ignition	[0|1]	Ignition signal - terminal 15 ▪ 0: Off ▪ 1: On
Sw_StarterReq	[0|1]	Starter request signal (usually sent to engine ECU) ▪ 0: Off ▪ 1: On

Torque Manager Module

Description

BEV vehicles have an intelligent core component, the torque manager. One of its responsibilities is the energy management. The torque manager is the master of all the other electronic control units and uses its energy management component to coordinate these. The torque manager captures the accelerator and brake pedal command of the driver and forwards the torque request to the electric machines and regenerative serial brake system (Torque Request Coordination BEV on page 131 and Brake Control BEV on page 124).

The soft ECU torque manager controls:

- The deceleration of the vehicle via recuperation (torque request current controller EM) and standard brake (torque request to soft ECU brake).
- Torque requests for the current controller of the two electric machines.

- The DC link operation. It gets the start request from the start button and switches the DC link on and off and controls the pre-charge phase of the DC link capacitor.
- The drive mode such as parking and forward and reverse driving.

The following tables show the external inports and outports of the ASM module.

Inports Control

The following table shows the ports of the Interface_External_In:

Name	Unit	Description
Drivetrain_Mode	[1|2|3]	Switch for drivetrain mode: ▪ 1: All-Wheel Drive (AWD) ▪ 2: Front-Wheel Drive (FWD) ▪ 3: Rear-Wheel Drive (RWD) ▪ 4: Front-Engine/Front-Wheel Drive with part-time Four-Wheel Drive Extension (FF-4WD) ▪ 5: Front-Engine/Front-Wheel Drive (FF)
Enable_Trq_Request_ESP	[0|1]	Enable torque request ESP
Enable_Trq_Decrease_Request_ACC	[0|1]	Enable torque decrease request ACC
Enable_Trq_Increase_Request_ACC	[0|1]	Enable torque increase request ACC
ESP_Mode	[0|1|2|3]	ESP mode: ▪ 0: None ▪ 1: ABS ▪ 2: ESP ▪ 3: ASR
i_FinalDrive_Front	[]	Final gear ratio of the Front-Wheel Drive
i_FinalDrive_Rear	[]	Final gear ratio of the Rear-Wheel Drive
Pos_AccPedal	[%]	Position of the accelerator pedal
Pos_BrakePedal	[%]	Brake pedal position
Reset	[0|1]	Reset integrators to their initial conditions
SelectorLever	[-3|-2|-1|0|1]	Selector lever position: ▪ -3: TipShift ▪ -2: Park ▪ -1: Reverse ▪ 0: Neutral ▪ 1: Drive

Name	Unit	Description
SOC_Bat	[%]	Battery state of charge
Sw_Ignition	[0|1]	Ignition signal - terminal 15: ▪ 0: Off ▪ 1: On
Sw_StarterReq	[0|1]	Starter request signal (usually sent to engine ECU): ▪ 0: Off ▪ 1: On
Trq_Decrease_Request_ACC	[Nm]	Torque decrease request ACC
Trq_EM_Front	[Nm]	Torque EM front
Trq_EM_Rear	[Nm]	Torque EM rear
Trq_Increase_Request_ACC	[Nm]	Torque increase request ACC
Trq_Max_Brake	[Nm]	Maximum brake torque
Trq_Request_ESP	[Nm]	Torque request ESP
V_Bat_HV	[V]	Voltage of high voltage battery
V_DCLink	[V]	DC link voltage
v_Vehicle	[km/h]	Vehicle velocity

The following table shows the interface to connect an external ECU (real ECU):

Name	Unit	Description
Ctrl_Parking_Pawl	[0|1]	Parking pawl control signal
Pos_BrakePedal_Desired	[%]	Desired brake pedal position
State_BEVEngine	[0|1|2|3|4]	State BEV engine
State_DCLink	[0|1]	State of DC link: ▪ 0: Off ▪ 1: On
Sw_DCLink	[0|1]	Switch for DC link: ▪ 0: Off ▪ 1: On
Trq_Request_Brake	[Nm]	Torque request brake
Trq_Request_EM_Front	[Nm]	Torque request EM front
Trq_Request_EM_Rear	[Nm]	Torque request EM rear

Outports Control

The following table shows the ports of the Interface_External_Out:

Name	Unit	Description
Ctrl_Parking_Pawl	[0|1]	Parking pawl control signal
Pos_BrakePedal_Desired	[%]	Desired brake pedal position

Name	Unit	Description
State_BEVEngine	[0|1|2|3|4]	State BEV engine
State_DCLink	[0|1]	State of DC link: ▪ 0: Off ▪ 1: On
Sw_DCLink	[0|1]	Switch for DC link: ▪ 0: Off ▪ 1: On
Trq_Request_Brake	[Nm]	Torque request brake
Trq_Request_EM	[Nm]	Torque request EM
Trq_Request_EM_Front	[Nm]	Torque request EM front
Trq_Request_EM_Rear	[Nm]	Torque request EM rear
Vehicle_Topology	[-2|-1|0|2]	Vehicle topology: ▪ -2: EM only ▪ -1: ICE only ▪ 0: P0 hybrid ▪ 2: P2 hybrid

Related topics

References

Brake Control BEV..... 124
Torque Request Coordination BEV..... 131

Vehicle Dynamics Module

Description

This module contains the implementation of a multibody system for a passenger car including tire, aerodynamics, and suspension calculation.

The following tables show the external inports and outports of the ASM module.

Subsystems

The module contains the following subsystems:

- Brake Subsystem on page 434
- Suspension Subsystem on page 435
  - Front Suspension Subsystem on page 437
  - Rear Suspension Subsystem on page 438
- Vehicle Movement Subsystem on page 440

Inports control

The following table shows the ports of the Interface_External_In:

Name	Unit	Description
ECU_Commands	[]	ECU commands derived from the customized maneuver user signals
Enable_Trq_Brake_Extern	[0|1]	Enable using external torque brake
Pos_AccPedal	[%]	Position of the accelerator pedal
Pos_BrakePedal	[%]	Brake pedal position
Reset_VehicleStates	[0|1]	Reset signal from the maneuver scheduler
Sw_Ignition	[0|1]	Ignition signal - terminal 15 ▪ 0: Off ▪ 1: On
Trq_Brake_Request_Extern	[Nm]	External torque brake request
Trq_Eff_Engine	[Nm]	Effective engine torque
Torque_EM_Front	[Nm]	Front EM torque
Torque_Request_Brake	[Nm]	Torque request brake
Vehicle_Topology	[-2|-1|0|2]	Vehicle topology: ▪ -2: EM only ▪ -1: ICE only ▪ 0: P0 hybrid ▪ 2: P2 hybrid

The following table shows the interface to connect an external ECU (real ECU):

Name	Unit	Description
Ctrl_ChangeOverValve_1	[0_1]	Change over valve control signal of the first braking circuit
Ctrl_ChangeOverValve_2	[0_1]	Change over valve control signal of the second braking circuit
Ctrl_HydPump	[0_1]	Control signal of the hydraulic pump
Ctrl_InletValve_FL	[0_1]	Control signal of the front left inlet valve
Ctrl_InletValve_FR	[0_1]	Control signal of the front right inlet valve
Ctrl_InletValve_RL	[0_1]	Control signal of the rear left inlet valve
Ctrl_InletValve_RR	[0_1]	Control signal of the rear right inlet valve
Ctrl_OutletValve_FL	[0_1]	Control signal of the front left outlet valve
Ctrl_OutletValve_FR	[0_1]	Control signal of the front right outlet valve

Name	Unit	Description
Ctrl_OutletValve_RL	[0_1]	Control signal of the rear left outlet valve
Ctrl_OutletValve_RR	[0_1]	Control signal of the rear right outlet valve
Ctrl_PreChargeValve_1	[0_1]	Precharge valve control signal of first braking circuit
Ctrl_PreChargeValve_2	[0_1]	Precharge valve control signal of second braking circuit
Enable_TrqDecrease_Fast_ESP	[0|1]	Enable torque decrease fast ESP
Enable_TrqDecrease_Slow_ESP	[0|1]	Enable slow torque decrease request for ESP
Enable_TrqIncrease_ESP	[0|1]	Enable ESP torque increase
ESP_Intervention	[0|1]	ESP intervention
Trq_DecreaseRequest_Fast_ESP	[Nm]	Torque decrease request fast ESP
Trq_DecreaseRequest_Slow_ESP	[Nm]	ESP slow torque decrease request
Trq_IncreaseRequest_ESP	[Nm]	ESP torque increase request
Trq_PowerSeering	[Nm]	Power-steering torque

Outports Control

The following table shows the ports of the Interface_External_Out:

Name	Unit	Description
ECU_ESP_Mode	[0|1|2|3]	Switch ESP mode ▪ 0: None ▪ 1: ABS ▪ 2: ESP ▪ 3: ASR
Enable_p_Brake_Desired	[0|1]	Enable desired brake pressure
Enable_TrqDecrease_Fast_ESP	[0|1]	Enable torque decrease fast ESP
Enable_TrqDecrease_Slow_ESP	[0|1]	Enable slow torque decrease request for ESP
Enable_TrqIncrease_ESP	[0|1]	Enable ESP torque increase
p_Brake_Desired	[bar]	Desired brake pressure
Trq_DecreaseRequest_Fast_ESP	[Nm]	Torque decrease request fast ESP
Trq_DecreaseRequest_Slow_ESP	[Nm]	ESP slow torque decrease request
Trq_IncreaseRequest_ESP	[Nm]	ESP torque increase request

Inports Plant

The following table shows the ports of the Interface_External_In:

Name	Unit	Description
Angle_SteeringWheel	[deg]	Steering wheel angle
Angle_Vehicle_Init_CoorSys_E	[x;y;z][rad]	Initial yaw angle of the ASM vehicle in the earth coordinate system
Const_Steering_Mode_Manual	[1|2]	Controls whether the manual steering mode expects the steering wheel angle or the steering wheel torque ▪ 1: Steering wheel angle ▪ 2: Steering wheel torque
Pos_BrakePedal	[%]	Brake pedal position
Fric_Coeff_CP	[FL;FR;RL;RR][]	Friction coefficients at the contact point positions
Keep_VehiclePosition	[0|1]	Flag to disable all integrators in the model in order to keep the vehicle at its current position
M_Articulated_T	[1x36]	Articulated mass matrix
Pos_AccPedal	[%]	Position of the accelerator pedal
p_Ambient	[Pa]	Ambient pressure
Pos_Vehicle_Init_CoorSys_E	[x;y;z][m]	Initial position of the ASM vehicle in earth coordinate system
Pos_z_CP	[FL;FR;RL;RR][m]	z-position of the contact points
Q_Articulated_T	[6x1]	External articulated wrench
q_dt_Vehicle_Init	[6x1]	Vector signal with the initial velocity and angular velocity of the ASM vehicle
Reset_VehicleStates	[0|1]	Reset signal from maneuver scheduler
Sw_ParkingBrake	[0|1]	Controls the parking brake ▪ 0: Off ▪ 1: On
Sw_SteeringMode	[1|2]	Controls the steering angle calculation method: ▪ 1: Angle ▪ 2: Torque
Sw_Steering_Mode	[1|2]	Controls whether the steering angle is determined

Name	Unit	Description
		by the maneuver or manually ▪ 1: Manually ▪ 2: Maneuver schedule
Sw_Tire_Parameter_Set_CP	[FL;FR;RL;RR][1|2|3|4]	Controls the used tire parameter set.
Trq_Driver_External	[Nm]	Reference torque for the steering angle calculation
Trq_Hitch_CoorSys_V	[x;y;z][Nm]	Hitch torque w.r.t vehicle coordinate system
Trq_Shaft	[FL,FR,RL,RR][Nm]	Torque of the output shaft
T_Ambient	[°C]	Ambient temperature
UnitVec_z_CP	[FL;FR;RL;RR][x;y;z]	Unit vector in the z-direction at the contact point positions
v_Wind_Coor_Sys_E	[x;y;z][m|s]	Velocity of the wind in the earth coordinate system

The following table shows the interface to connect an external plant (real plant):

Name	Unit	Description
Angle_dt_EPSMotor	[rad/s]	EPS motor angular velocity
Angle_EPSMotor	[rad]	EPS motor rotation angle
Displ_Steering	[m]	Steering rod displacement
Displ_Steering_dt	[m/s]	Steering rod velocity

Outports Plant

The following table shows the ports of the Interface_External_Out:

Name	Unit	Description
a_y_Vehicle_CoG	[m/s^2]	Lateral acceleration of vehicle with COG in consideration
Active_CP_VehDyn	[]	Vector of active vehicle dynamics contact points
Angle_SteeringWheel	[deg]	Steering wheel angle
Angle_Vehicle_CoorSys_E	[x;y;z][deg]	Vehicle orientation (roll, pitch, yaw)
Angle_Yaw_Vehicle_CoorSys_E	[deg]	Vehicle yaw angle
Coef_RollingRes	[FL;FR;RL;RR][]	Rolling resistance coefficient
Coef_RollingRes_Mean	[]	Coefficient for rolling resistance
CorneringStiffness	[FL;FR;RL;RR][N]	Cornering stiffness of tires

Name	Unit	Description
CorneringStiffness_Tire_Front	[N/rad]	Cornering stiffness of the front tires
CorneringStiffness_Tire_Rear	[N/rad]	Cornering stiffness of rear tires
Cw_x	[]	Longitudinal aerodynamics coefficients
F_Driving_Res	[N]	Sum of the driving resistances acting on the vehicle
F_Vehicle_Gravitational	[x;y;z][N]	Gravitational force
F_x_Aero_CoorSys_V	[N]	Longitudinal aerodynamic force
i_Steering_Mean	[]	Mean value of steering gear ratio
Inertia_z_Vehicle_Total	[kgm^2]	Vehicle inertia around the z-axis
m_TotalVehicle	[kg]	Total vehicle mass
omega_Mean_Wheel	[rad/s]	Mean wheel speed
omega_Wheel	[FL;FR;RL;RR] [rad/s]	Wheel speed
Pos_CP_FL_CoorSys_E	[x;y][m]	Position of the front left contact points in the earth coordinates
Pos_CP_FR_CoorSys_E	[x;y][m]	Position of the front right contact points in the earth coordinates
Pos_CP_R2L_CoorSys_E	[x;y][m]	Position of the second rear left contact points in the earth coordinates
Pos_CP_R2L2_CoorSys_E	[x;y][m]	Position of the second rear (inner) left contact points in the earth coordinates
Pos_CP_R2R_CoorSys_E	[x;y][m]	Position of the second rear right contact points in the earth coordinates
Pos_CP_R2R2_CoorSys_E	[x;y][m]	Position of the second rear (inner) right contact points in the earth coordinates
Pos_CP_RL_CoorSys_E	[x;y][m]	Position of the rear left contact points in the earth coordinates
Pos_CP_RL2_CoorSys_E	[x;y][m]	Position of the rear (inner) left contact points in the earth coordinates

Name	Unit	Description
Pos_CP_RR_CoorSys_E	[x;y][m]	Position of the rear right contact points in the earth coordinates
Pos_CP_RR2_CoorSys_E	[x;y][m]	Position of the rear (inner) right contact points in the earth coordinates
Pos_FL_Wheel	[x;y;z][m]	Front left wheel position
Pos_FR_Wheel	[x;y;z][m]	Front right wheel position
Pos_Vehicle_CoorSys_E	[x;y;z][m]	Vector containing the ASM vehicle position values in the earth coordinate system [x,y,z]
Pos_x_CoG_Vehicle_Total	[m]	x-element of position vector of vehicle centre of gravity
Pos_x_Vehicle_CoorSys_E	[m]	x vehicle position
Pos_y_Vehicle_CoorSys_E	[m]	y vehicle position
r_Dyn_Tire	[FL;FR;RL;RR][m]	Dynamic tire radius
r_Dyn_Tire_Mean	[m]	Mean dynamic tire radius
r_Tire_extern	[m]	External tire radius
RollRate_Vehicle_CoG	[deg/s]	Vehicle roll rate
RotationMatrix_V_to_E	[1x9]	Rotation matrix to transfrom the values from the vehicle to the earth coordinate system
RotationMatrix_V_to_E_T	[1x9]	Rotation matrix from the earth to vehicle coordinate system
s_Vehicle	[m]	Driven distance of the vehicle
Sw_MasterBrakeCylinder_Mode	[1|2|3]	Master brake cylinder mode ▪ 1: Modeled linearly ▪ 2: Modeled physically ▪ 3: Brake booster
Sw_r_Tire	[1|2]	Switch for the source of the tire radius: ▪ 1: Intern ▪ 2: Extern
Sw_Rotation	[1|2]	Flag between the Bryant angle and Toe-Camber-SideView interpretation ▪ 1: Cardan angles ▪ 2: Toe-Camber-Caster angles

Name	Unit	Description
Sw_Tire_Model	[1|2]	Switch tire model ▪ 1: TMeasy ▪ 2 Magic formula
Trq_Max_Brake	[Nm]	Maximum brake torque
Trq_SteeringWheel	[Nm]	Steering wheel torque at steering column
v_Vehicle	[x;y;z][km/h]	Vehicle velocity
v_Vehicle	[km/h]	Vehicle velocity
v_Vehicle_dt	[x;y;z][m/s^2]	Derivative of vehicle velocity
v_x_Vehicle_CoG	[km/h]	Longitudinal vehicle velocity
v_y_Vehicle_CoG	[km/h]	Lateral vehicle velocity at centre of gravity
w_Vehicle	[x;y;z][deg/s]	Vehicle angular velocity
w_Vehicle_dt	[x;y;z][rad/s^2]	Derivative of vehicle angular velocity
YawRate_Vehicle_CoG	[deg/s]	Vehicle yaw rate

Animation

The following table shows the ports of the Animation:

Name	Unit	Description
Angle_FL_Wheel	[Toe;Camber][deg]	Animation signal
Angle_FR_Wheel	[Toe;Camber][deg]	Animation signal
Angle_RL_Wheel	[Toe;Camber][deg]	Animation signal
Angle_Rot_FL_Wheel	[deg]	Animation signal
Angle_Rot_FR_Wheel	[deg]	Animation signal
Angle_Rot_RL_Wheel	[deg]	Animation signal
Angle_Rot_RR_Wheel	[deg]	Animation signal
Angle_RR_Wheel	[Toe;Camber][deg]	Animation signal
Angle_SteeringWheel	[deg]	Steering wheel angle
Angle_Vehicle_CoorSys_E	[x;y;z][deg]	Vehicle orientation (roll, pitch, yaw)
Angle_Yaw_Vehicle_CoorSys_E	[deg]	Vehicle yaw angle
a_y_Vehicle_CoG	[m/s^2]	Lateral acceleration of vehicle with COG in consideration
F_FL_Tire_CoorSys_V	[x;y;z][N]	Animation signal
F_FR_Tire_CoorSys_V	[x;y;z][N]	Animation signal
F_RL_Tire_CoorSys_V	[x;y;z][N]	Animation signal
F_RR_Tire_CoorSys_V	[x;y;z][N]	Animation signal
p_Brake	[FL;FR;RL;RR][bar]	Animation signal

Name	Unit	Description
Pos_FL_Wheel	[x;y;z][m]	Front left wheel position
Pos_FR_Wheel	[x;y;z][m]	Front right wheel position
Pos_RR_Wheel	[x;y;z][m]	Animation signal
Pos_Vehicle_CoorSys_E	[x;y;z][m]	Vector containing the ASM vehicle position values in the earth coordinate system [x,y,z]
r_Dyn_FL_Tire	[m]	Animation signal
r_Dyn_FR_Tire	[m]	Animation signal
r_Dyn_RL_Tire	[m]	Animation signal
r_Dyn_RR_Tire	[m]	Animation signal
s_Vehicle	[m]	Driven distance of the vehicle
v_x_Vehicle_CoG	[km/h]	Longitudinal vehicle velocity
YawRate_Vehicle_CoG	[deg/s]	Vehicle yaw rate

Vehicle Dynamics Basic Module

Description

Vehicle dynamics calculates the vehicle speed based on the traction and load torque from the external driving resistances (aerodynamics, slope, friction).

The following tables show the external inports and outports of the ASM module.

Outports Control

The following table shows the ports of the Interface_External_Out:

Name	Unit	Description
Enable_p_Brake_Desired	[0|1]	Enable desired brake pressure
Enable_TrqDecrease_Fast_ESP	[0|1]	Enable torque decrease fast ESP
Enable_TrqDecrease_Slow_ESP	[0|1]	Enable slow torque decrease request for ESP
Enable_TrqIncrease_ESP	[0|1]	Enable ESP torque increase
p_Brake_Desired	[bar]	Desired brake pressure
Trq_DecreaseRequest_Fast_ESP	[Nm]	Torque decrease request fast ESP

Name	Unit	Description
Trq_DecreaseRequest_Slow_ESP	[Nm]	ESP slow torque decrease request
Trq_IncreaseRequest_ESP	[Nm]	ESP torque increase request

Inports Plant

The following table shows the ports of the Interface_External_In:

Name	Unit	Description
Ctrl_Parking_Pawl	[0|1]	Parking pawl control signal
Inertia_Out_Diff	[kg m^2]	Inertia reduced to the differential output shaft
Pos_BrakePedal_Desired	[%]	Desired brake pedal position
Reset_States	[0|1]	Reset states
s_Vehicle	[m]	Driven distance of the vehicle
Slope	[%]	Slope of the road
Trq_Out_Diff	[Nm]	Differential output torque

Outports Plant

The following table shows the ports of the Interface_External_Out:

Name	Unit	Description
F_Driving_Res	[N]	Sum of driving resistances acting on the vehicle
m_Total_Vehicle	[kg]	Total vehicle mass
omega_Wheel	[rad/s]	Wheel speed
Trq_Max_Brake	[Nm]	Maximum brake torque
v_Vehicle	[km/h]	Vehicle velocity in km/h
v_Vehicle	[m/s]	Vehicle velocity in m/s

Subsystems

Introduction

The following subsystems are contained inside the ASM modules.

Where to go from here

Information in this section

Subsystems of the Driver Module 353
Subsystems of the Driver Assistance Module 359
Subsystems of the Driver Basic Module 362
Subsystems of the Engine Basic Module 365
Subsystems of the Engine Gasoline Module 368
Subsystems of the Environment Traffic Module 394
Subsystems of the Vehicle Dynamics Module 433

Subsystems of the Driver Module

Where to go from here

Information in this section

Lateral Controller Subsystem 354
The **LateralController** keeps the vehicle on the road by controlling the steering wheel.

Longitudinal Controller Subsystem 356
The **LongitudinalController** subsystem includes the main longitudinal driver models which are used to control the accelerator pedal, brake pedal, selector lever, and clutch pedal as well as gear.

Reference Velocity Subsystem 358
The **ReferenceVelocity** subsystem provides the reference velocity for the longitudinal controller.

Lateral Controller Subsystem

Overview

The **LateralController** keeps the vehicle on the road by controlling the steering wheel.

There are a variety of driving situations a driver model has to handle. To provide optimal control results in every driving situation, two lateral controllers are implemented. One lateral controller offers optimal results for driving on roads, the other lateral controller is optimized for stationary driving situations such as driving in a circle. The maneuver selects the best lateral controller for each driving situation. Both lateral controllers use preview information on the road for the control law.

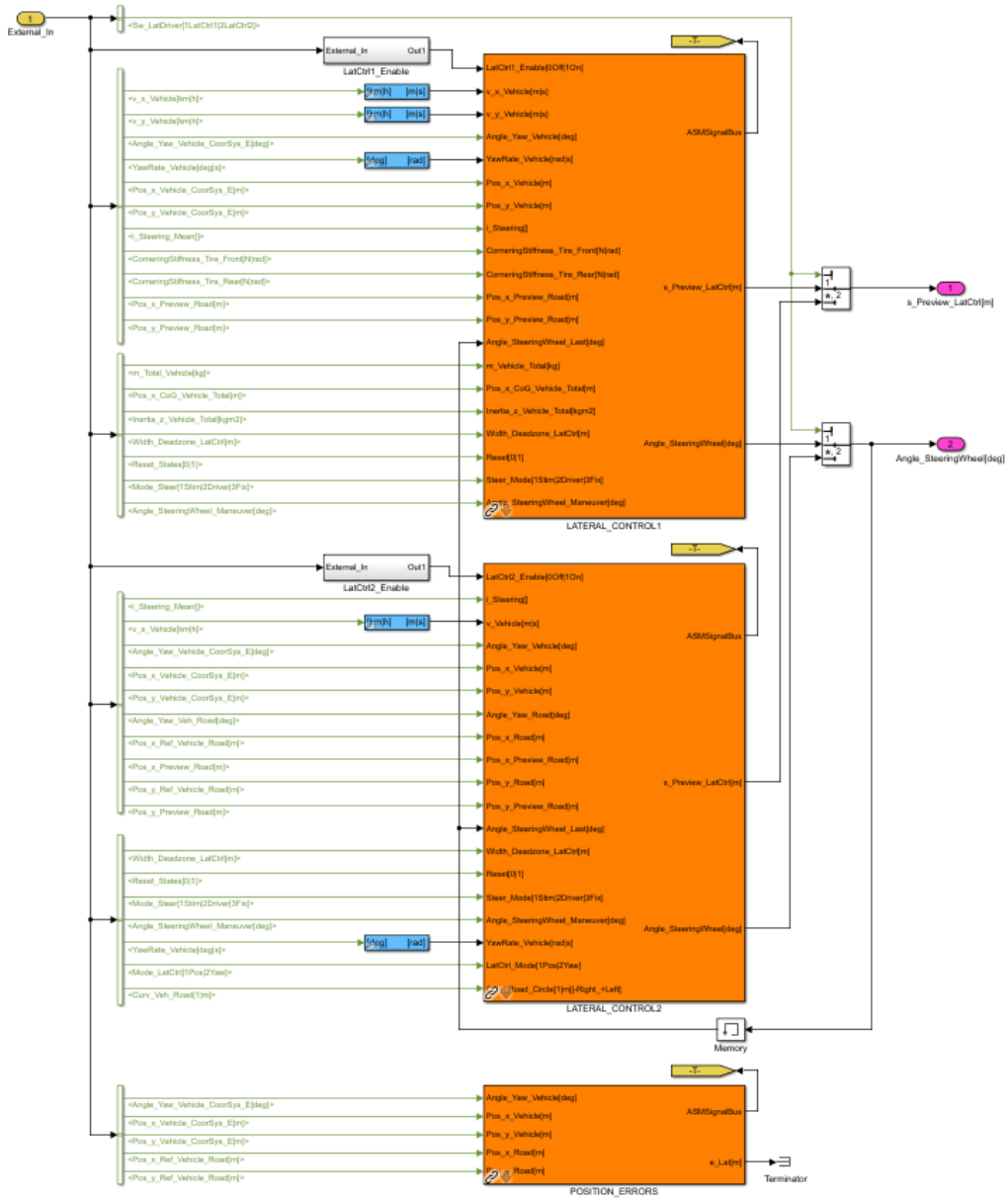

The Lateral_Control1 subsystem is recommended for road following maneuvers.

The Lateral_Control2 subsystem is recommended for stationary driving situations such as driving in a circle at a given lateral acceleration.

The Position_Errors subsystem provides data on the deviation between vehicle position and current road position.

Subsystems

- Lateral Controller 1 (ASM Environment Reference 🕮)
- Lateral Controller 2 (ASM Environment Reference 🕮)
- Position Errors (ASM Environment Reference 🕮)

Longitudinal Controller Subsystem

Overview

The LongitudinalController subsystem includes the main longitudinal driver models which are used to control the accelerator pedal, brake pedal, selector lever, and clutch pedal as well as gear.

The longitudinal driver models can handle several drivetrain and vehicle variants, for example four-wheel drive and front-wheel drive. Therefore, the block interface allows easy adaptation to a new variant. The following figure shows the LongitudinalController subsystem:

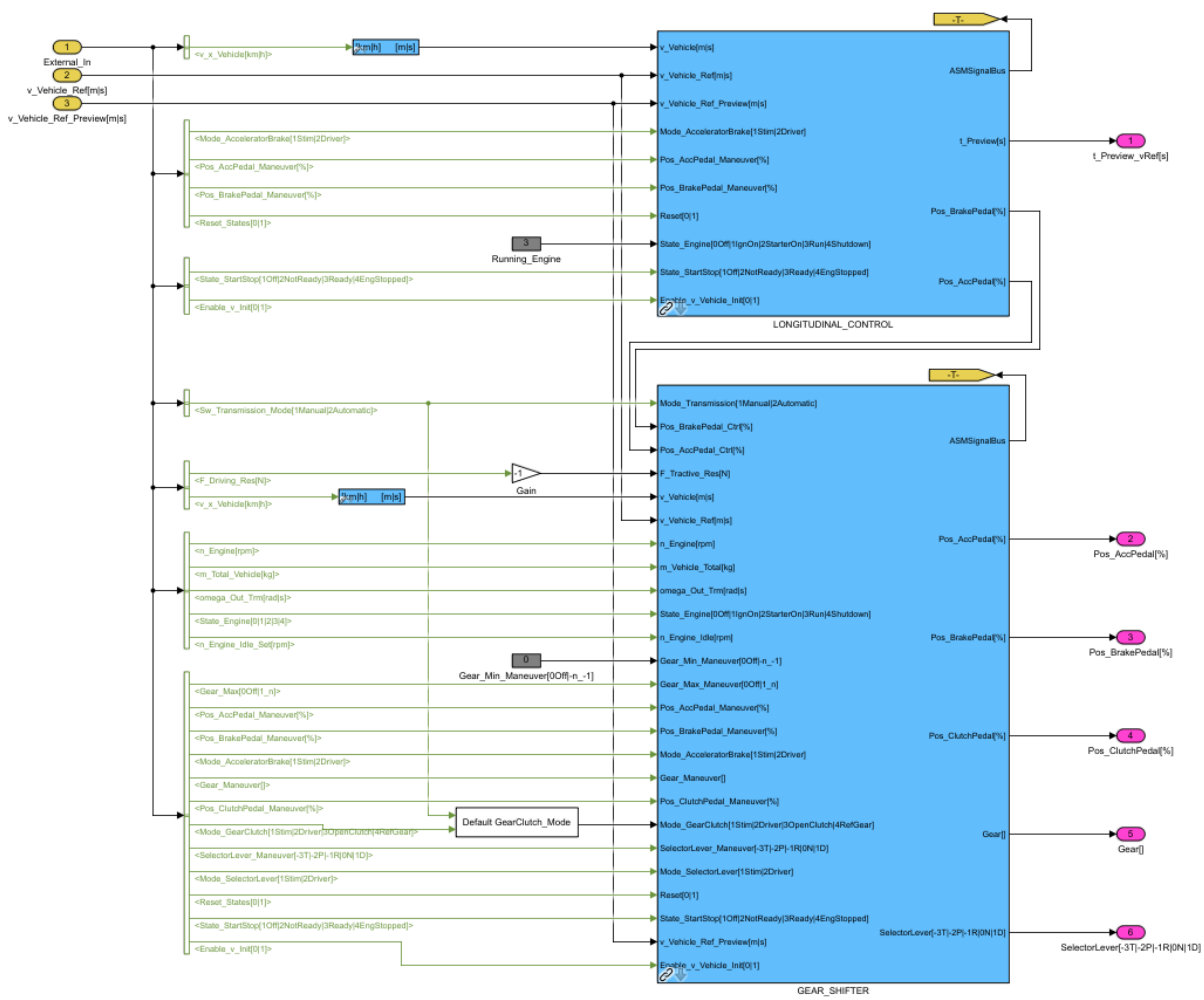

LONGITUDINAL CONTROL block The controller controls the accelerator pedal and brake pedal according to a reference velocity. This velocity is provided by the reference velocity subsystem. Refer to Reference Velocity Subsystem on page 358.

GEAR_SHIFTER block The gear shifter controls the gears and clutch in manual transmission. The block also contains the vehicle move-off functionality.

Simulation scenarios

The longitudinal driver models are configurable and can be set to perform several simulation scenarios. These are shown in the following table:

Scenario	Source		Driver Task	
	Reference	Stimulus	Manual Transmission	Automatic Transmission
1	Velocity	–	Driver controls AccPedal, BrakePedal, Gear and ClutchPedal	Driver controls AccPedal, BrakePedal and SelectorLever
2	Velocity Gear	–	Driver controls AccPedal, BrakePedal and ClutchPedal	Driver controls AccPedal, BrakePedal and SelectorLever
3	Velocity	ClutchPedal Gear	Driver controls AccPedal and BrakePedal	Driver controls AccPedal, BrakePedal and SelectorLever
4	–	AccPedal BrakePedal	Driver controls ClutchPedal and Gear	Driver controls SelectorLever

These simulation scenarios are illustrated in more details in the following:

Scenario 1: The driver follows the reference velocity by controlling the accelerator, brake, and clutch pedals. Additionally, the gear or the selector lever is controlled depending on the transmission type.

Scenario 2: The driver follows the reference velocity and the gear by controlling the accelerator, brake, and clutch pedals. In this case, the reference gear is used to trigger the clutch pedal control or the selector lever depending on the transmission type.

Scenario 3: The driver follows the reference velocity. The gearshift and the clutch pedal are predefined. In this case, the driver controls the accelerator and brake pedal. If automatic transmission is active, the predefined gear is used to trigger the selector lever control.

Scenario 4: The driver controls the clutch pedal and gear as well as the selector lever according to the accelerator and brake pedal, which come from stimulus.

The longitudinal driver models offer a wide variety of features, which you can configure via the model parameters. The following table shows the important features.

Feature	Description
Engine stall detection	All controls are disabled, when the engine has been stalled
Gear skipping and hold during down shift	During emergency or hard brake, the driver holds the current gear or skips gears during fast down shift
Gear skipping during up shift	The driver skips gears during acceleration

Feature	Description
Startup gear	The driver selects the most suitable gear during startup
Gear passing through neutral during gearshift	The driver simulates passing the gear through neutral during gearshift
Clutch hold during gearshift	The driver holds the clutch completely open during gearshift
Following small velocities	The driver controls a slipping clutch to follow small velocities
Considering the tractive resistance	The driver takes the tractive resistance into consideration during the startup and gearshift

Subsystems

- Longitudinal Control (ASM Environment Reference 🕮)
- Gear Shifter (ASM Environment Reference 🕮)

Reference Velocity Subsystem

Overview

The ReferenceVelocity subsystem provides the reference velocity for the longitudinal controller. The defined speed course is adapted according to the horizontal (curves) as well as vertical (uphill, downhill) road conditions. The reference velocity provided by the maneuver is automatically adapted to the road according to preview information and user-defined driver characteristics.

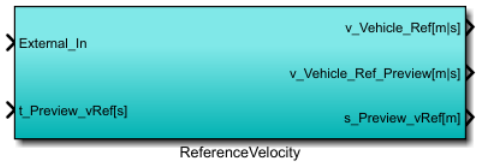

For a detailed description of the reference velocity calculation, refer to Road Reference Velocity (ASM Environment Reference 🕮).

Subsystems

- Road Reference Velocity (ASM Environment Reference 🕮)
- Speed Profiler (ASM Environment Reference 🕮)
- Curvature (ASM Environment Reference 🕮)

Subsystems of the Driver Assistance Module

Soft ECU ACC Subsystem

Overview

The adaptive cruise control (ACC) system takes the driver's desired speed and distance behind the leading vehicle as inputs and takes control of the vehicle to hold these values. It then calculates torque requests according to the actual traffic scenarios on the road and the vehicle states, and sends them to other soft ECUs like the engine or the brake soft ECU to maintain a suitable speed.

The next illustration shows the Simulink representation of the soft ECU ACC model.

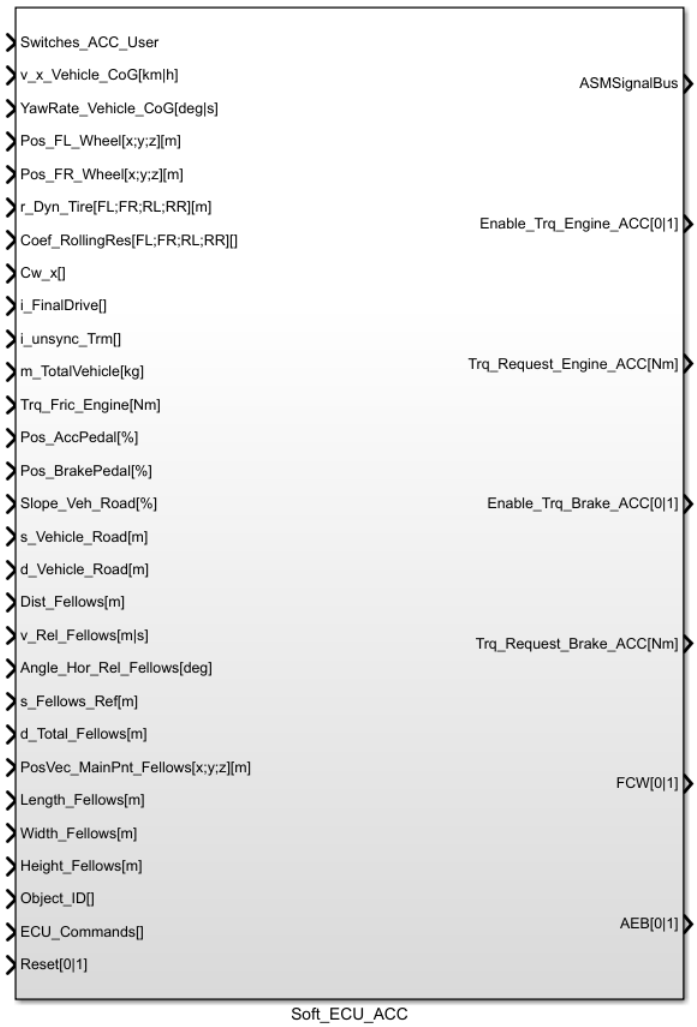

The **Soft_ECU_ACC** block is located in the Soft ECU subsystem of the ASMTraffic demo model (see Soft ECU (ASM Vehicle Dynamics Reference 🕮)).

Inports

The following table shows the inports.

Name	Unit	Description
Angle_Hor_Rel_Fellows	[deg]	Horizontal angle of detected fellow vehicle
Coef_RollingRes	[FL;FR;RL;RR][]	Rolling resistance coefficient
Cw_x	[]	Longitudinal aerodynamics coefficients
d_Total_Fellows	[m]	Lateral fellow vehicle position on the road. This signal is needed to ensure hold functionality.
d_Vehicle_Road	[m]	Lateral distance of the vehicle regarding the preferred lane
Dist_Fellows	[m]	Distance to fellow vehicle, detected by sensor
ECU_Commands	[]	ECU commands derived from the customized maneuver user signals
Height_Fellows	[m]	Height of the fellow vehicles
i_FinalDrive	[]	Total transmission ratio of final driveline (between transmission output and wheel speed
i_unsync_Trm	[]	Unsynchronized transmission ratio
Length_Fellows	[m]	Length of fellow vehicles
m_TotalVehicle	[kg]	Total vehicle mass
Object_ID	[]	Object id of the detected object
Pos_AccPedal	[%]	Friction torque of engine
Pos_BrakePedal	[%]	Position of the accelerator pedal
Pos_FL_Wheel	[x;y;z][m]	Front left wheel position
Pos_FR_Wheel	[x;y;z][m]	Front right wheel position
PosVec_MainPnt_Fellows	[x;y;z][m]	Vector with fellow vehicle main point position
r_Dyn_Tire	[FL;FR;RL;RR][m]	Dynamic tire radius
Reset	[0|1]	Reset integrators to their initial conditions
s_Fellows_Ref	[m]	Distance s along the route for all traffic fellows
s_Vehicle_Road	[m]	Distance s along the route at the position of the vehicle. Reset to zero after each turn on a closed route.

Name	Unit	Description
Slope_Veh_Road	[%]	Slope of the road at the current distance s of the vehicle
Switches_ACC_User	[]	Control switches set by the user
Trq_Fric_Engine	[Nm]	Friction torque of engine
v_Rel_Fellows	[m/s]	Fellow velocity relative to the ASM vehicle velocity
v_Vehicle	[km/h]	Vehicle velocity
v_x_Vehicle_CoG	[km/h]	Longitudinal vehicle velocity
Width_Fellows	[m]	Width of the fellow vehicles
YawRate_Vehicle_CoG	[deg/s]	Vehicle yaw rate

Outports

The following table shows the outports.

Name	Unit	Description
AEB	[0|1]	Autonomous emergency brake flag from soft ecu ACC
ASMSignalBus	[]	Signal bus that contains signals of ASM components. Refer to ASMSignalBus (ASM User Guide 🕮).
Enable_Trq_Brake_ACC	[0|1]	Enable torque request for braking system
Enable_Trq_Engine_ACC	[0|1]	Enable torque request for engine system
FCW	[0|1]	Forward collision warning flag from soft ecu ACC
Trq_Request_Brake_ACC	[Nm]	Torque request for braking system
Trq_Request_Engine_ACC	[Nm]	Torque request for engine system

Subsystems

- Target Selection ACC (ASM Traffic Reference 🕮)
- User Interface ACC (ASM Traffic Reference 🕮)
- Soft ECU ACC (ASM Traffic Reference 🕮)
- Output Interface ACC (ASM Traffic Reference 🕮)

Related topics

References

Soft ECU (ASM Vehicle Dynamics Reference 🕮)

Subsystems of the Driver Basic Module

Driver Subsystem

Overview

The Driver model consists of two main subsystems, which are shown in the following illustration:

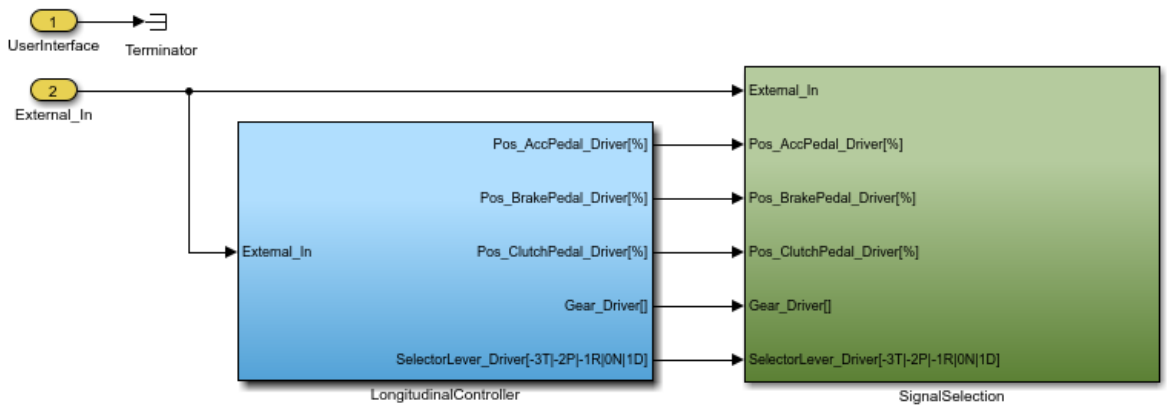

The SignalSelection subsystem offers a central access point to all relevant signals of the Driver and other environment blocks.

The LongitudinalController subsystem includes the main longitudinal driver models, which are used to control the accelerator pedal, brake pedal, selector lever, clutch pedal, and gearshift. The following illustration shows the LongitudinalController subsystem:

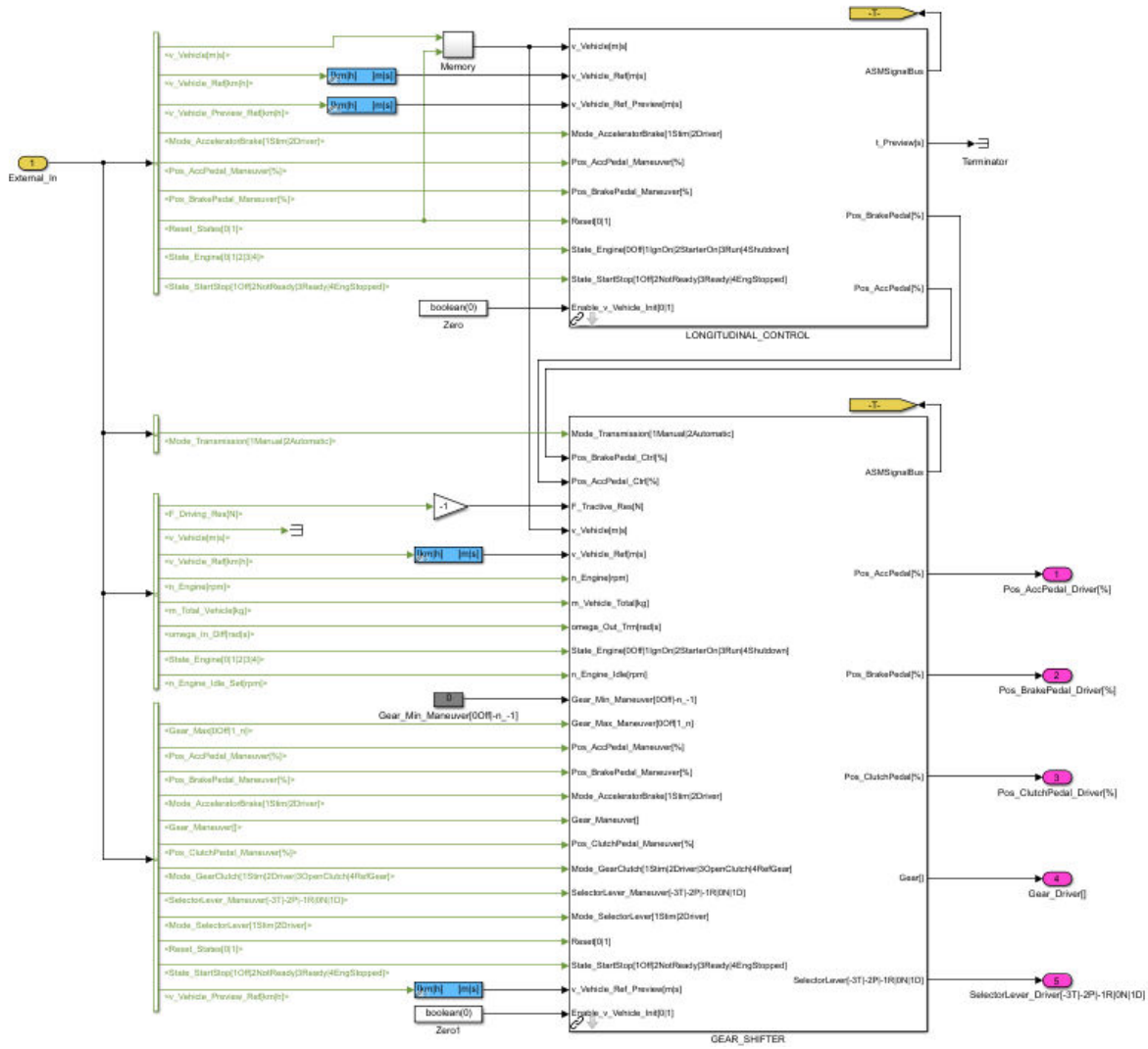

The LONGITUDINAL_CONTROL block controls the accelerator pedal and brake pedal. Both pedals are controlled in such a way that the vehicle follows a given reference velocity. The longitudinal controller comprises feedback and feed forward. Only one of the two pedals can be activated at a time.

The longitudinal driver models can handle several drivetrain and brake system variants. The blocks provide interfaces for easy adaptation to new vehicle variants.

The GEAR_SHIFTER block controls the gears and clutch for manual transmission and the selector lever for automatic transmission. The accelerator pedal and brake pedal positions are modified in particular driving situations. Vehicle startup is also done by the GEAR_SHIFTER block.

Simulation scenarios

The longitudinal driver models are configurable and can be set to perform several simulation scenarios, which are summarized in the following table:

Scenario	Source		Driver Task	
	Reference	Stimulus	Manual Transmission	Automatic Transmission
1	Velocity	–	Driver controls AccPedal, BrakePedal, Gear, and ClutchPedal	Driver controls AccPedal, BrakePedal, and SelectorLever
2	Velocity Gear	–	Driver controls AccPedal, BrakePedal, and ClutchPedal	Driver controls AccPedal, BrakePedal, and SelectorLever
3	Velocity	ClutchPedal Gear	Driver controls AccPedal and BrakePedal	Driver controls AccPedal, BrakePedal, and SelectorLever
4	–	AccPedal BrakePedal	Driver controls ClutchPedal and Gear	Driver controls SelectorLever

The simulation scenarios are illustrated in more detail in the following:

Scenario 1 The driver follows the reference velocity by controlling the accelerator, brake and clutch pedals. Additionally, the gearshift or the selector lever is controlled, depending on the transmission type.

Scenario 2 The driver follows the reference velocity and gear by controlling the accelerator, brake and clutch pedals. In this case, the reference gear is used to trigger the clutch pedal control or the selector lever, depending on the transmission type.

Scenario 3 The driver follows the reference velocity, while the positions of the gearshift and the clutch pedal are predefined. In this case, the driver controls the accelerator and brake pedals. If automatic transmission is active, the predefined gear is used to trigger the selector lever control.

Scenario 4 The driver controls the clutch pedal and the gearshift as well as the selector lever according to the accelerator and brake pedals. These are controlled by a stimulus.

The longitudinal driver models offer a wide variety of features, which can be configured by using the model parameters. The following table shows the most important features:

Feature	Description
Engine stall detection	All controls are disabled when the engine has been stalled.
Gear skipping and hold during downshift	During emergency or hard braking, the driver holds the current gear or skips gears during fast downshift.
Gear skipping during upshift	The driver skips gears during acceleration.
Startup gear	The driver selects the most suitable gear during startup.
Gear passing through neutral during gearshift	The driver passes the gear through neutral during gearshift.
Clutch hold during gearshift	The driver holds the clutch completely open during gearshift.
Following low velocities	The driver controls a slipping clutch to follow low velocities.

Feature	Description
Considering the tractive resistance	The driver takes the tractive resistance into consideration during startup and gearshift.
Backwards driving	The driver can drive backwards with manual and automatic transmission.

Subsystems

The following list contains all the model's subsystems:

- Longitudinal Control (ASM Drivetrain Basic Reference 🕮)
- Gear Shifter (ASM Drivetrain Basic Reference 🕮)

Subsystems of the Engine Basic Module

Where to go from here

Information in this section

Engine Basic Subsystem.....365
The engine is the power source in the drivetrain, and the driver controls the engine by the accelerator pedal.

Soft ECU Engine Subsystem.....366
The soft ECU engine gets torque requests from different ECUs and systems, for example, an ESP ECU, a CC ECU or a hybrid management system.

Engine Basic Subsystem

Overview

The engine is the power source in the drivetrain, and the driver controls the engine by the accelerator pedal. The output of the engine is the torque resulting from both the combustion and the resulting engine speed. The engine model does not model the combustion process. In the engine block, the engine torque is calculated as a function of engine speed and accelerator pedal position

Subsystems

- Engine (ASM Vehicle Dynamics Reference 🕮)
- Fuel Consumption (ASM Vehicle Dynamics Reference 🕮)

Soft ECU Engine Subsystem

Description

The soft ECU engine gets torque requests from different ECUs and systems, for example, an ESP ECU, a CC ECU or a hybrid management system. These requests depend on the dynamic states of the vehicle, which require the engine torque to be decreased or increased. The engine ECU can control engine torque in a slow way (for example, by setting the accelerator pedal position) or in a fast way (for example, by controlling the injection and ignition).

Also an idle speed control is included in the soft ECU.

Inports

The following table shows the inports.

Name	Unit	Description
Enable_n_Engine_Idle_Request	[0|1]	Switch to activate the engine idle speed request: ▪ 0: Off ▪ 1: On
Enable_Trq_Decrease_Fast_ESP	[0|1]	Signal from ESP ECU to enable or disable the fast torque decreasing request
Enable_Trq_Increase_Fast_ESP	[0|1]	Signal from ESP ECU to enable or disable the fast torque increasing request
Enable_Trq_Request_Extern	[0|1]	Signal to enable or disable the external torque request
Factor_Trq_Engine_Red	[%]	Requested engine torque reduction factor from the transmission control unit

Name	Unit	Description
Mode_StartButtonState	[1|2]	Mode of start button state: ▪ 1: Stimulus ▪ 2: Soft ECU
n_Engine	[rpm]	Engine speed
n_Engine_Idle_Request	[rpm]	Engine idle speed request
Pos_AccPedal_Driver	[%]	Driver accelerator pedal position
Reset	[]	Reset of states
State_StartButton	[-1|0|1|2]	Start button state in case of stimulus: ▪ -1: Power off ▪ 0: Power on ▪ 1:Accessory on ▪ 2: Starter on
Sw_Crankshaft_Reset	[0|1]	Switch to enable/disable crankshaft reset: ▪ 0: Disable ▪ 1: Enable
Sw_Ignition	[0|1]	Ignition signal (terminal 15) ▪ 0: Off ▪ 1: On
Sw_StarterReg	[0|1]	Starter request signal (usually sent to engine ECU) ▪ 0: Off ▪ 1: On
Trq_Decrease_Request_Fast_ESP	[Nm]	The torque request from ESP ECU, fast decreasing
Trq_Driver_Des	[Nm]	Driver desired torque
Trq_Driver_Ind_Des	[Nm]	Desired indicated torque reqeusted by the driver
Trq_Engine_Ind_Max	[Nm]	Maximum available indicated engine torque
Trq_Increase_Request_Fast_ESP	[Nm]	The torque request from ESP ECU, fast increasing
Trq_Request_Extern	[Nm]	The external torque request

Outports

The following table shows the outports.

Name	Unit	Description
ASMSignalBus	[]	Signal bus that contains signals of ASM components. Refer to ASMSignalBus (ASM User Guide 🕮).
Pos_AccPedal_Driver_Des	[%]	Driver desired accelerator pedal position
Pos_AccPedal_Ctrl	[%]	Accelerator pedal position influenced by the idle speed controller and the torque intervention
State_Engine	[0|1|2|3|4]	Engine state ▪ 0: Engine off ▪ 1: Ignition on ▪ 2: Ignition on and starter activated ▪ 3: Engine running ▪ 4: Ignition switched off, shutdown

Name	Unit	Description
Sw_Engine_Dynmaics_Fast	[0|1]	Flag, routed to engine basic, to increase the engine dynamic ▪ 0: Standard ▪ 1: Fast
Sw_Starter	[0|1]	Switch for starter activation (output from ECU) ▪ 0: Off ▪ 1: On

Blocks

- Idle Speed Control Engine Basic
- ESP Fast Torque Set
- Torque Intervention Basic
- Shift Torque Set
- Engine Operation Basic

Subsystems of the Engine Gasoline Module

Where to go from here

Information in this section

Air Path Subsystem.....369
The air path simulates the compressor, the intercooler, the throttle, and the intake manifold dynamics on the intake side, and the turbine, the EGR with cooler, and the exhaust manifold on the exhaust side.

Cooling Subsystem.....373
This **COOLER** block describes the engine cooling system. It contains a basic cooler model.

Evaporator Subsystem.....374
The **Evaporator** system contains a passive tank evaporation system.

Exhaust System Subsystem.....378
This model describes the engine exhaust system. It contains models for a catalyst with oxygen storage capacity and a lambda sensor.

Fuel System Subsystem.....379
The fuel system model is provided by ASM for a common-rail system. The common-rail system consists of several modules like the high pressure pump, fuel metering unit, pressure control valve and injector.

Piston Engine Subsystem.....383
In the **Piston Engine** subsystem, the engine combustion block describes the air flow through the inlet valve and the torque generated by the combustion process.

Soft ECU Gasoline Subsystem.....386
The **SOFT_ECU_GASOLINE** block serves as basic gasoline engine ECU controller software without any diagnostics and is used to test the engine model in closed-loop operation when no real ECU is connected.

Air Path Control Subsystem.....391
The **AirPathControl** collects the controller for the air path. The external setpoint of the controller are connected with to the measurement interface that for test purpose the measurement data could be used as setpoint.

Torque Control Subsystem.....393
In the **TorqueControl** block the induced engine torque setpoint is estimated.

Air Path Subsystem

Overview

The air path simulates the compressor, the intercooler, the throttle, and the intake manifold dynamics on the intake side, and the turbine, the EGR with cooler, and the exhaust manifold on the exhaust side.

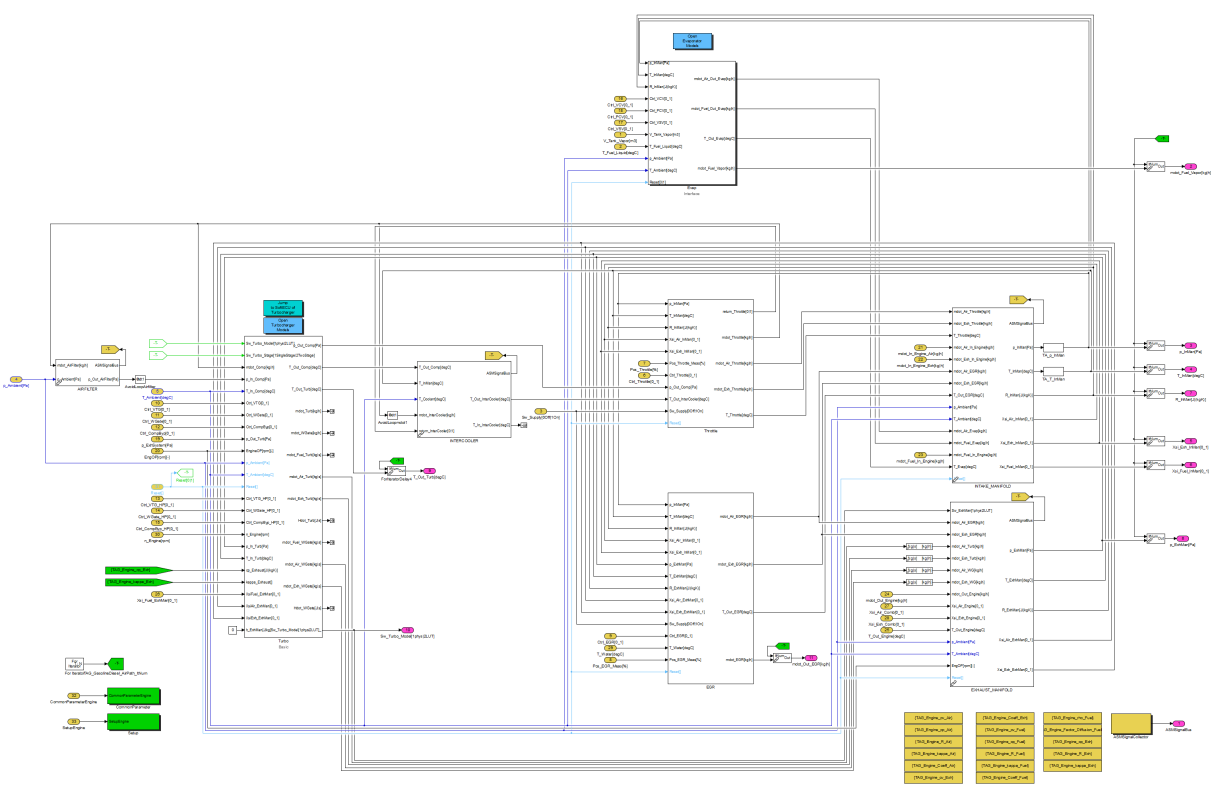

The turbocharger is modeled as a compressor and turbine connected via a turbocharger shaft. For a detailed explanation of the modeling approach, refer to Model Overview (ASM Turbocharger Reference 🕮) or Model Overview (ASM Turbocharger Light Reference 🕮).

The intercooler cools the air flow from the compressor according to the efficiency and temperature difference between the input and coolant temperature. The throttle is modeled as an orifice with a variable cross section which limits the fresh air flow into the intake manifold.

In the intake manifold, the mass of the manifold is calculated from mass flow balance and the temperature of the manifold from energy balance (in: throttle, EGR, out: engine). The pressure follows from the ideal gas equation.

The same simulation approach is used for the exhaust manifold (in: engine, out: EGR, turbine). In contrast to the throttle, the mixing of fresh air with exhaust is calculated.

The EGR cooler cools the air flow from combustion according to the efficiency and temperature difference between input and coolant. The EGR is simulated as an orifice with variable cross section. The EGR position can increase the air flow into the intake manifold.

The next illustration is a schematic of the air path simulation approach with physical turbocharger:

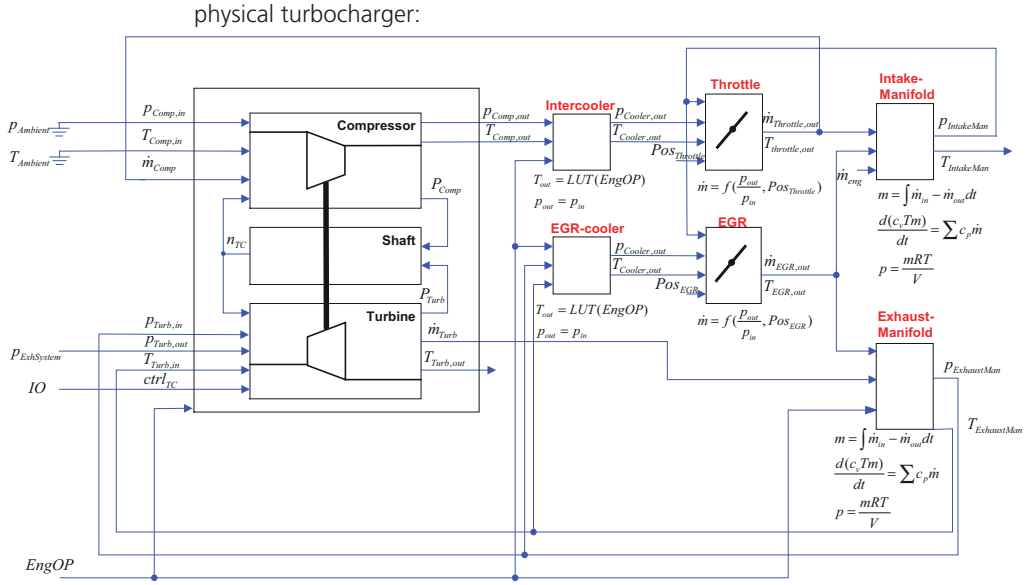

In the basic turbocharger, the compressor is simulated by several look-up tables. For further information, refer to Basic Turbocharger (ASM Turbocharger Reference 🕮). The shaft and turbine are not simulated. The exhaust manifold is therefore also simulated by look-up tables.

The next illustration is a schematic of the air path simulation approach with a basic turbocharger:

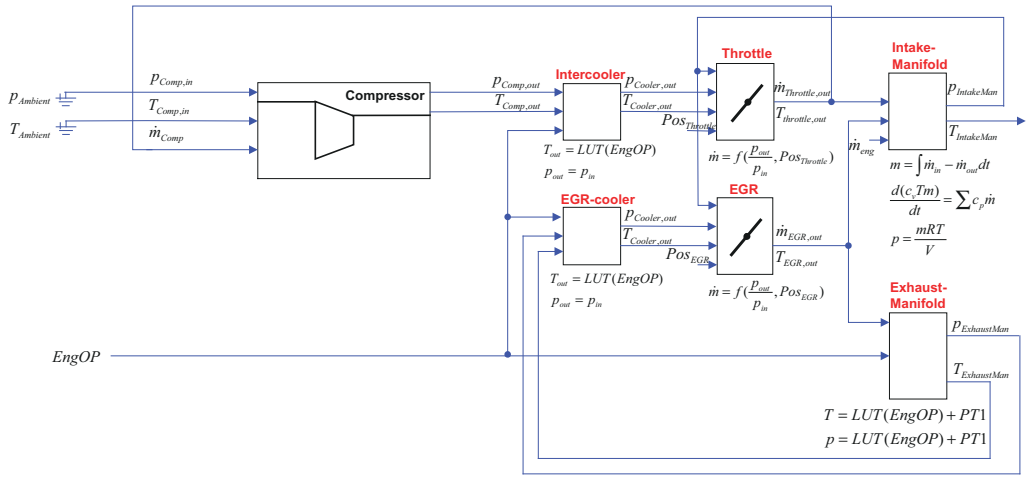

Tip

A state space representation with the algebraic equations used for this approach can be found in the Equations of Air Path with Map-Based Turbocharger (ASM Diesel Engine Reference 🕮).

Inports

The following table shows the inports:

Name	Unit	Description
CommonParameterEngine	[]	Bus signals of CommonEngineParameters
Ctrl_CompByp_HP	[0_1]	Control signal for high-pressure stage compressor bypass
Ctrl_EGR	[0_1]	Control signal (PWM) of electrical EGR valve
Ctrl_PCV	[0_1]	Control signal of the pressure control valve for the tank evaporation
Ctrl_Throttle	[0_1]	Control signal (PWM) of electrical throttle valve
Ctrl_VCV	[0_1]	Control signal of the vapor control valve for the tank evaporation
Ctrl_VSV	[0_1]	Control signal of the vent shut valve for the tank evaporation
Ctrl_VTG	[0_1]	Control signal of variable turbine geometry
Ctrl_VTG_HP	[0_1]	Control signal of high-pressure turbine variable turbine geometry
Ctrl_WGate	[0_1]	Control signal of wastegate valve
Ctrl_WGate_HP	[0_1]	Control signal of high-pressure wastegate valve
EngineSetup	[]	Bus signals of EngineSetup
EngOP	[rpm][]	Engine operating point: n_Engine[rpm],relative airmass
lambda	[]	Lambda value after combustion process
mdot_Fuel_In_Engine	[kg|h]	Mass flow of the vaporized fuel into the engine
mdot_In_Engine_Air	[kg/h]	Mass flow of fresh air into the engine
mdot_In_Engine_Exh	[kg/h]	Mass flow of exhaust into the engine

Name	Unit	Description
mdot_Out_Engine	[kg/h]	Mass flow out of the piston engine (exhaust gas)
n_Engine	[rpm]	Engine speed
p_Ambient	[Pa]	Ambient pressure
p_ExhSystem	[Pa]	Exhaust system back pressure (pressure after turbine)
Pos_EGR_Meas	[%]	Measured throttle position at real EGR valve
Pos_Throttle	[%]	Throttle position
Reset	[]	Reset of states
SetupEngine	[]	Bus signal of the EngineSetup
Sw_MainRelay	[0_1]	Activates main relay from ECU
Switches_AirPath	[]	Bus Signals of Switches_AirPath
T_Ambient	[°C]	Ambient temperature
T_Coolant	[°C]	Coolant temperature
T_Out_Engine	[°C]	Engine output temperature
XsiAir_ExhMan	[0_1]	Mass fraction of air in the exhaust manifold
XsiExh_ExhMan	[0_1]	Mass fraction of exhaust gas in the exhaust manifold
XsiFuel_ExhMan	[0_1]	Mass fraction of fuel in the exhaust manifold

Outports

The following table shows the outports:

Name	Unit	Description
ASMSignalBus	[]	Signal bus that contains signals of ASM components. Refer to ASMSignalBus (ASM User Guide 🕮).
mdot_Fuel_Vapor	[kg/h]	Vaporized fuel from the tank that is burned in the engine
mdot_Out_EGR	[kg/h]	Mass flow through the EGR valve
p_ExhMan	[Pa]	Exhaust manifold pressure
p_InMan	[Pa]	Intake manifold pressure (pressure before piston engine)
R_InMan	[J/(kg K)]	Gas constant of mixture in intake manifold
ratio_m_Exh_InMan	[0_1]	Ratio of exhaust mass to complete mass in intake manifold
Sw_Turbo_Model	[1|2]	Selector for the turbocharger model ▪ 1: Physical-based model ▪ 2: Look-up table-based model
T_InMan	[°C]	Intake manifold temperature
T_Out_Turb	[°C]	Compressor output temperature
Xsi_Exh_InMan	[0_1]	Mass fraction of the exhaust in the intake manifold
Xsi_Fuel_InMan	[0_1]	Mass fraction of the fuel in the intake manifold

Blocks

- Evaporator Subsystem on page 374
- EGR Valve (Mechanical) (ASM Gasoline Engine Reference 🕮)

- EGR Valve (ASM Gasoline Engine Reference 🕮)
- EGR Cooler (ASM Gasoline Engine Reference 🕮)
- Intercooler (ASM Gasoline Engine Reference 🕮)
- Exhaust Manifold (ASM Gasoline Engine Reference 🕮)
- Intake Manifold (ASM Gasoline Engine Reference 🕮)
- Mechanical Throttle (ASM Gasoline Engine Reference 🕮)
- Throttle Valve (ASM Gasoline Engine Reference 🕮)
- Turbocharger (ASM Gasoline Engine Reference 🕮)
- Air Filter (ASM Gasoline Engine Reference 🕮)

Cooling Subsystem

Overview

This COOLER block describes the engine cooling system. It contains a basic cooler model.

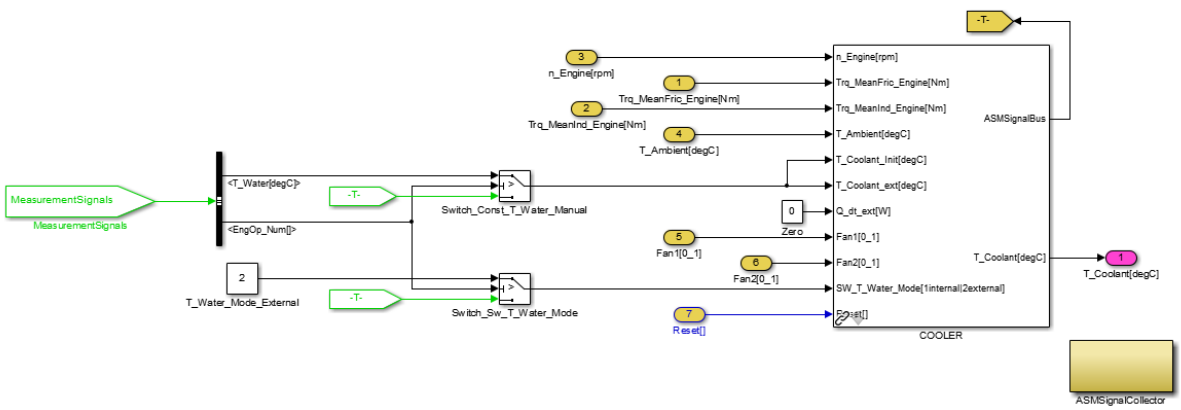

Inports

The following table shows the inports:

Name	Unit	Description
Fan1	[0_1]	Controller signal for first fan
Fan2	[0_1]	Controller signal for second fan
n_Engine	[rpm]	Engine speed
Q_dt_ext	[W]	External heat flow to the coolant
SW_T_Water_Mode	[1|2]	Switch for mode ▪ 1: Temperature calculated internally ▪ 2: Temperature set externally
T_Ambient	[°C]	Ambient temperature
T_Coolant_ext	[°C]	External coolant temperature for user setting
T_Coolant_Init	[°C]	Initial coolant temperature

Name	Unit	Description
Trq_MeanFric_Engine	[Nm]	Mean friction torque
Trq_MeanInd_Engine	[Nm]	Mean indicated torque

Outports

The following table shows the outports:

Name	Unit	Description
T_Coolant	[°C]	Coolant temperature

Blocks

- Cooler (ASM Gasoline Engine Reference 🕮)

Evaporator Subsystem

Description

The Evaporator system contains a passive tank evaporation system.

In gasoline engines, a tank evaporation system is used to check the tank for leakages and to prevent the vaporizing fuel from contaminating the environment.

Thre are two prepared models. You can implement them in the ASM Gasoline Engine model without the need to change the rest of the model.

- Evap_Interface:

  This is a default model for the evaporation system. The mass flow into the intake manifold is always zero. If an evaporation system is not needed, this model saves computation time.
- Evap_Evaporator_System:

  This model contains an evaporation system which calculates the mass flow of vaporized fuel from the fuel tank to the intake manifold depending on the actuation of the valves.

For an overview of the subsystems, refer to the following illustration.

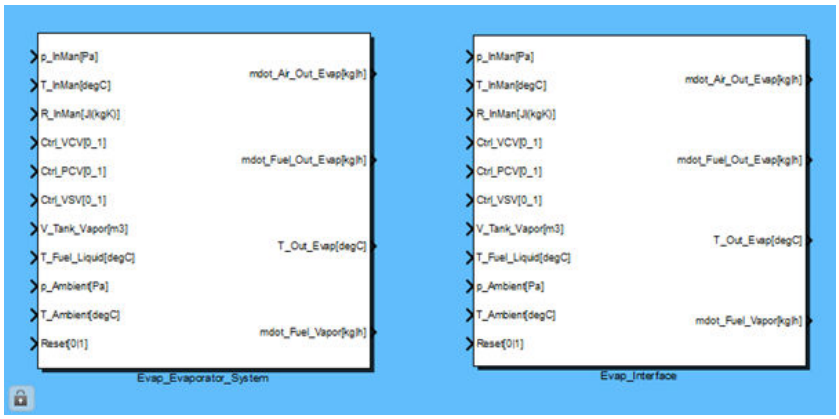

For information on how to replace the model, refer to How to Replace the Evaporator Models (ASM Gasoline Engine Model Description 🕮)

The following illustration shows an overview of the implementation and the most important physical values:

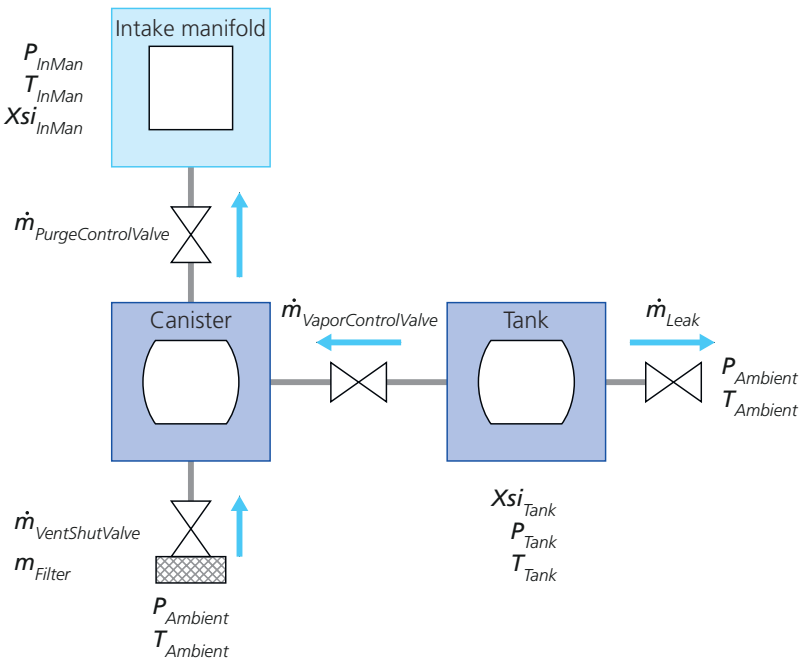

For an overview of the subsystem, refer to the following illustrations of the **Evap** subsystem:

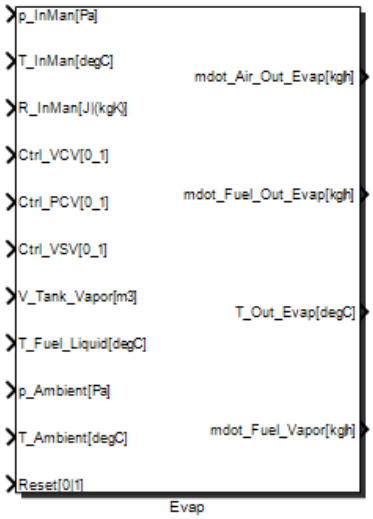

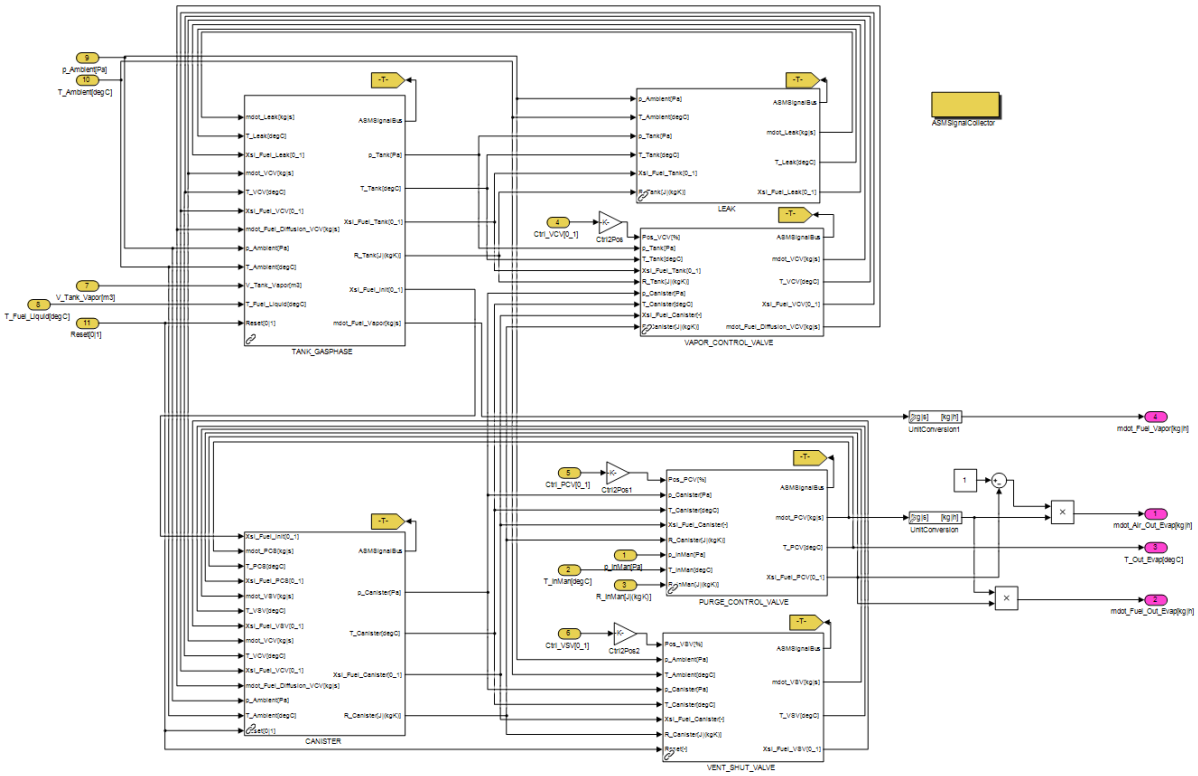

Inports

The following table shows the inports:

Name	Unit	Description
Ctrl_PCV	[0_1]	Control signal for the pressure control valve

Name	Unit	Description
Ctrl_VCV	[0_1]	Control signal for the vapor control valve
Ctrl_VSV	[0_1]	Control signal for the vent shut valve
p_Ambient	[Pa]	Ambient pressure
p_InMan	[Pa]	Intake manifold pressure
R_InMan	[J/(kgK)]	Gas constant in the intake manifold
Reset	[0|1]	Reset of states
T_Ambient	[°C]	Ambient temperature
T_Fuel_Liquid	[°C]	Temperature of the fuel in the tank
T_InMan	[°C]	Temperature in the intake manifold
V_Tank_Vapor	[m^3]	Free volume in the tank

Outports

The following table shows the outports:

Name	Unit	Description
mdot_Air_Out_Evap	[kg/h]	Air flow into the intake manifold from the evaporation system
mdot_Fuel_Out_Evap	[kg/h]	Fuel flow into the intake manifold from the evaporation system
mdot_Fuel_Vapor	[kg/h]	Fuel vaporization from the fuel tank
T_Out_Evap	[°C]	Flow temperature leaving the evaporation system

Blocks

- CANISTER (refer to Canister - Evaporator System (ASM Gasoline Engine Reference 🕮))
- LEAK (refer to Leak - Evaporator System (ASM Gasoline Engine Reference 🕮))
- PURGE_CONTROL_VALVE (refer to Purge Control Valve - Evaporator System (ASM Gasoline Engine Reference 🕮))
- TANK_GASPHASE (refer to Tank Gasphase - Evaporator System (ASM Gasoline Engine Reference 🕮))
- VAPOR_CONTROL_VALVE (refer to Vaporator Control Valve - Evaporator System (ASM Gasoline Engine Reference 🕮))
- VENT_SHUT_VALVE (refer to Vent Shut Valve - Evaporator System (ASM Gasoline Engine Reference 🕮))

Related topics

HowTos

How to Replace the Evaporator Models (ASM Gasoline Engine Model Description 🕮)

References

Canister (ModelDesk Parameterizing 🕮)
Leak (ModelDesk Parameterizing 🕮)
Purge Control Valve (ModelDesk Parameterizing 🕮)
Tank Gasphase (ModelDesk Parameterizing 🕮)
Vapor Control Valve (ModelDesk Parameterizing 🕮)
Vent Shut Valve (ModelDesk Parameterizing 🕮)

Exhaust System Subsystem

Overview

This model describes the engine exhaust system. It contains models for a catalyst with oxygen storage capacity and a lambda sensor.

The following illustration shows the exhaust system model.

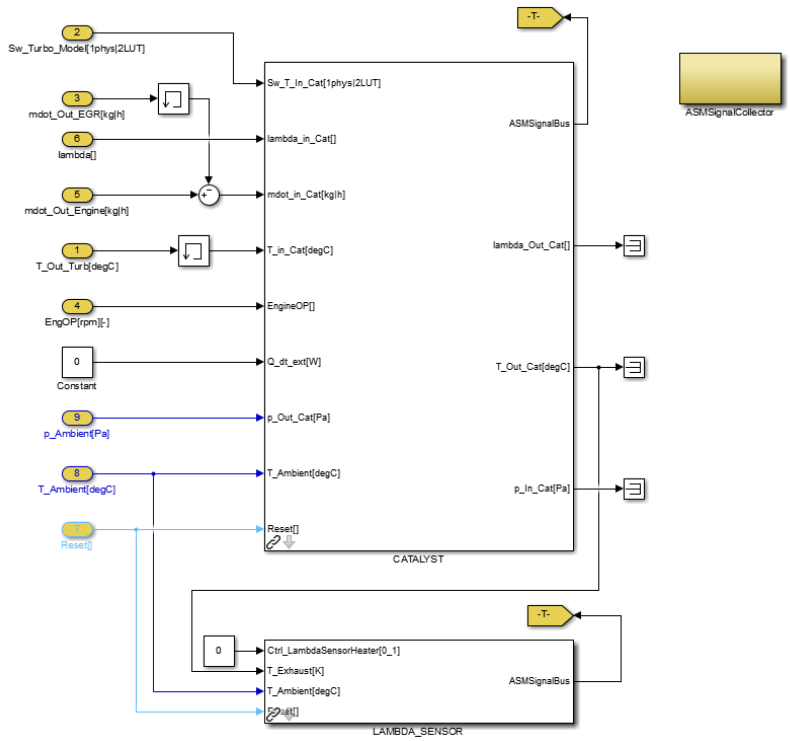

Inports

The following table shows the inports:

Name	Unit	Description
EngOP[rpm]	[]	Engine operating point
Lambda	[]	Delayed lambda value
mdot_Out_EGR	[kg/h]	Mass flow through EGR (air and exhaust)
mdot_Out_Engine	[kg/h]	Mass flow out of the piston engine (exhaust gas)
p_Ambient	[Pa]	Ambient pressure
Reset	[]	Reset of states

Blocks

- Catalyst (ASM Gasoline Engine Reference 🕮)
- Lambda Sensor (ASM Gasoline Engine Reference 🕮)

Fuel System Subsystem

Overview

The fuel system model is provided by ASM for a common-rail system. The common-rail system consists of several modules like the high pressure pump, fuel metering unit, pressure control valve and injector. In the following , the common-rail system is described. For a detailed description of this kind of fuel system, refer to Direct Injector (ASM Gasoline Engine Reference 🕮).

The common rail fuel system provides fuel for injection stored at high pressures in one chamber for all cylinders. This chamber is called the common rail. Common-rail systems enable fuel to be stored at high pressures independently of engine speed.

The fuel system contains a high-pressure pump, a pressure control valve, injectors, and the rail itself. The following illustration shows the Simulink **FuelSystem** block.

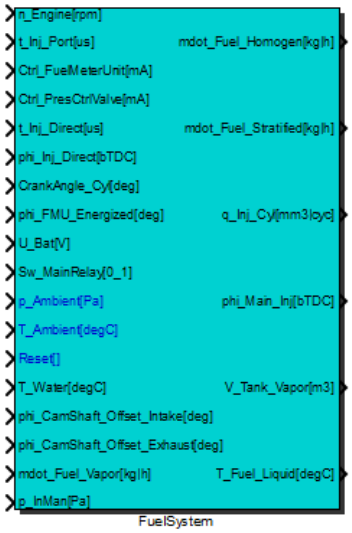

The following illustration shows a scheme of a common-rail fuel system.

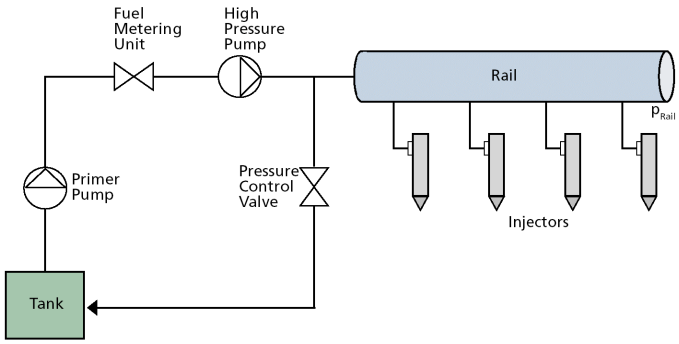

The following illustration shows the Simulink **FuelSystem** model.

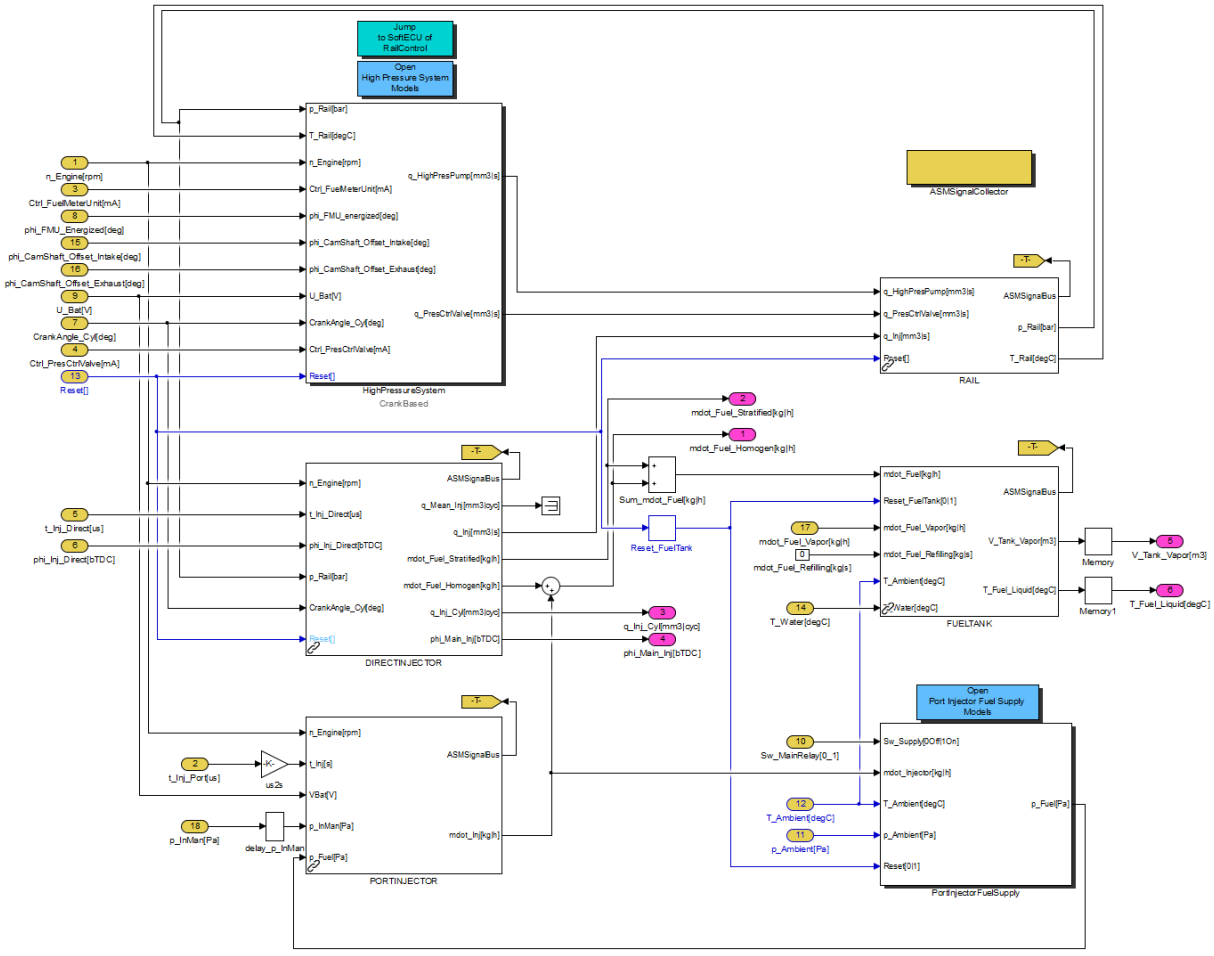

The common-rail system consists of:

- High-pressure system
- Rail
- Direct injector

The high-pressure system compresses the fuel to the required pressure in the rail. There are two models of the high-pressure system:

- Current-based
- Crank-based

The two systems differ in terms of how the way the rail pressure is regulated.

In the current-based approach, the regulation is based on two components:

- HIGH_PRESSURE_PUMP
- PRESSURE_CONTROL_VALVE

The process can be simplified as follows: The high-pressure pump builds up the pressure in the rail and the pressure control valve reduces it. The control signal for both components is the current signal. In the crank-based approach, the fuel

is delivered to the rail as needed. Here, the control signal is the crank angle degree. The model consists of one component (HPP_CRANKBASED).

Inports

The following table shows the inports:

Name	Unit	Description
CrankAngle_Cyl	[aTDC]	Crank angle per cylinder, positive value is after TDC
Ctrl_FuelMeterUnit	[mA]	Control signal (current) of fuel metering unit for common rail
Ctrl_PresCtrlValve	[mA]	Control signal (current) of pressure control valve for common rail
mdot_Fuel_Vapor	[kg/h]	Vaporized fuel that is burned in the engine
n_Engine	[rpm]	Engine speed
p_Ambient	[Pa]	Ambient pressure
p_InMan	[Pa]	Intake manifold pressure
phi_CamShaft_Offset_Exhaust	[deg]	Angle of the exhaust valve phasing in degree
phi_CamShaft_Offset_Intake	[deg]	Angle of the intake valve phasing in degree
phi_FMU_energized	[deg]	Start of energization of fuel metering unit
phi_Inj_Direct	[bTDC]	Injection start angle vector (cylinder 1, pulse 1, pulse 2, ..., cylinder n, pulse m)
Reset	[]	Reset all integrators to initial states
Sw_MainRelay	[0_1]	Activates main relay from ECU
T_Ambient	[°C]	Ambient temperature
t_Inj_Direct	[µs]	Injection time vector per cylinder for direct injection
t_Inj_Port	[s]	Injection time vector per cylinder for manifold injection
U_Bat	[]	Battery voltage

Outports

The following table shows the outports:

Name	Unit	Description
mdot_Fuel_Homogen	[kg/h]	Injected fuel mass for homogeneous combustion
mdot_Fuel_Stratified	[kg/h]	Injected fuel mass for stratified combustion
phi_Main_Inj	[aTDC]	Injection angel of main injection
q_Inj_Cyl	[mm^3/cyc]	Injection quantity per cylinder (vector of number of cylinders)
T_Fuel_Liquid	[°C]	Temperature of the liquid fuel in the tank
V_Tank_Vapor	[m^3]	Free volume in the tank

Blocks

- Rail (ASM Gasoline Engine Reference 🕮)
- High-Pressure Pump (ASM Gasoline Engine Reference 🕮)
- Pressure Control Valve (ASM Gasoline Engine Reference 🕮)

- High-Pressure Pump (Crank-Based) (ASM Gasoline Engine Reference 🕮)
- Direct Injector (ASM Gasoline Engine Reference 🕮)
- Port Injector (ASM Gasoline Engine Reference 🕮)
- Fuel Tank (ASM Gasoline Engine Reference 🕮)
- Select Fuel Injection (Former Version) (ASM Gasoline Engine Reference 🕮)
- Port Injector Fuel Supply CNG Model (ASM Gasoline Engine Reference 🕮)
- CNG High-Pressure Line (ASM Gasoline Engine Reference 🕮)
- CNG Pressure Regulator (ASM Gasoline Engine Reference 🕮)
- CNG Rail (ASM Gasoline Engine Reference 🕮)
- CNG Shutoff Valve (ASM Gasoline Engine Reference 🕮)
- CNG Tank (ASM Gasoline Engine Reference 🕮)

Piston Engine Subsystem

Overview

In the **Piston Engine** subsystem, the engine combustion block describes the air flow through the inlet valve and the torque generated by the combustion process. The effective torque consists of the mean indicated torque and the friction torque. The effects of the injection angle and of the air/fuel ratio are included as two efficiencies. The following illustration shows the subsystems.

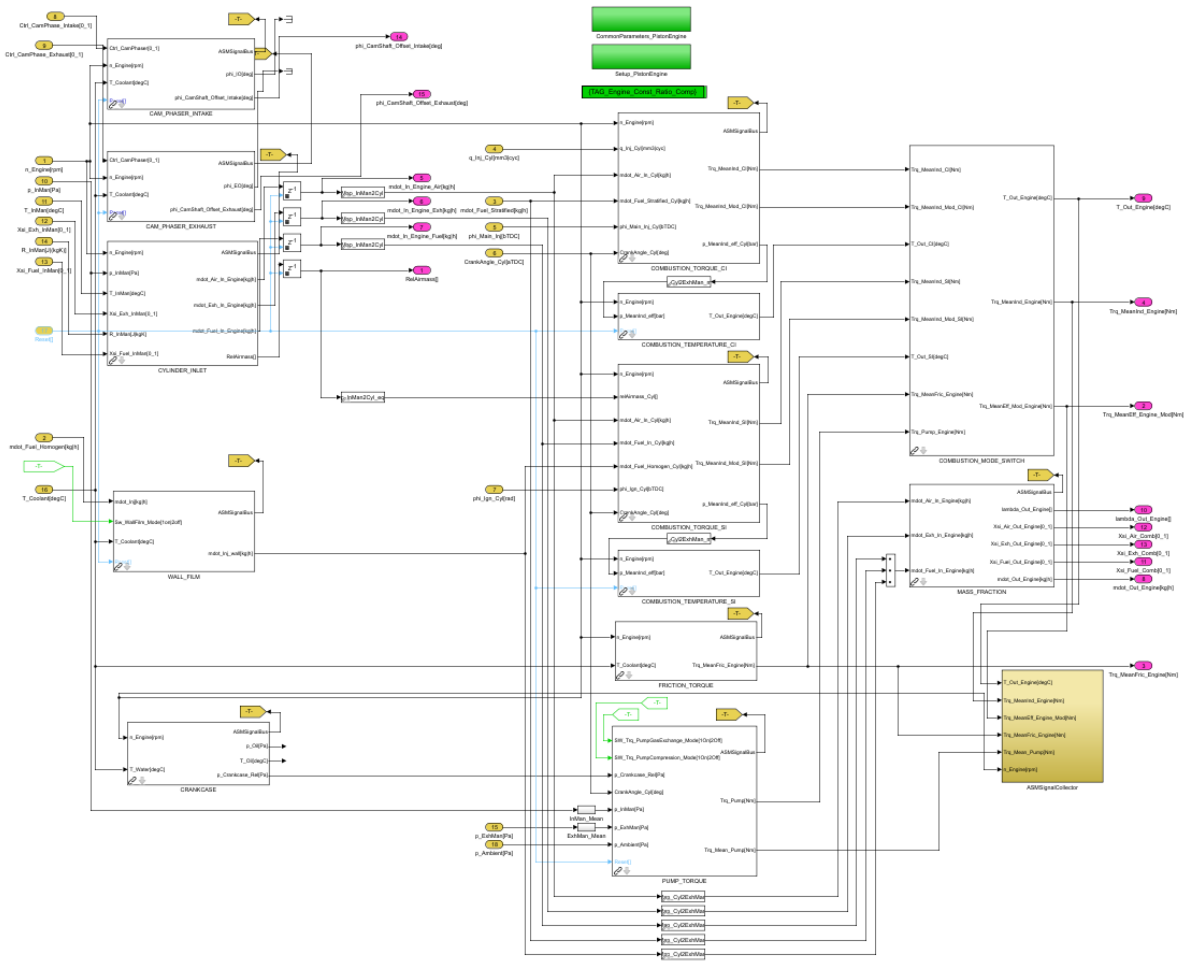

The combustion torque is modeled as a mean value. To simulate the individual cylinder torques, a crank angle based function is multiplied by the mean indicated torque.

Inports

The following table shows the inports:

Name	Unit	Description
CrankAngle_Cyl	[aTDC]	Crank angle per cylinder, positive value is after TDC
Ctrl_CamPhase_Exhaust	[0_1]	Control signal for the exhaust cam phaser
Ctrl_CamPhase_Intake	[0_1]	Control signal for the intake cam phaser
mdot_Fuel_Homogen	[kg/h]	Injected fuel mass for homogeneous combustion
mdot_Fuel_Stratified	[kg/h]	Injected fuel mass for stratified combustion
mdot_In_Engine_Fuel	[kg/h]	Mass flow of the vaporized fuel into the engine
n_Engine	[rpm]	Engine speed
p_Ambient	[Pa]	Ambient pressure

Name	Unit	Description
p_ExhMan	[Pa]	Exhaust manifold pressure
p_InMan	[Pa]	Intake manifold pressure (pressure before piston engine)
phi_Ign_Cyl	[rad]	Ignition angle per cylinder
phi_Main_Inj	[bTDC]	Injection angel of main injection
q_Inj_Cyl	[mm^3/cyc]	Injection quantity per cylinder (vector of number of cylinders)
R_InMan	[J/(kg K)]	Gas constant of mixture in intake manifold
Reset	[]	Reset states
T_Coolant	[°C]	Coolant water temperature
T_InMan	[°C]	Intake manifold temperature
Xsi_Exh_InMan	[0_1]	Exhaust gas fraction in the intake manifold
Xsi_Fuel_InMan	[0_1]	Fuel fraction in the intake manifold

Outports

The following table shows the outports:

Name	Unit	Description
lambda_Out_Engine	[]	Lambda value after combustion process
mdot_In_Engine_Air	[kg/h]	Mass flow of fresh air into the engine
mdot_In_Engine_Exh	[kg/h]	Mass flow of exhaust into the engine
mdot_In_Engine_Fuel	[kg/h]	Mass flow of the vaporized fuel into the engine
mdot_Out_Engine	[kg/h]	Mass flow out of the piston engine (exhaust gas)
phi_CamShaft_Offset_Exhaust	[deg]	Angle of the exhaust valve phasing in degree crank angle
phi_CamShaft_Offset_Intake	[deg]	Angle of the intake valve phasing in degree crank angle
RelAirmass	[]	Relative airmass of combustion process
T_Out_Engine	[°C]	Engine output temperature
Trq_MeanEff_Engine_Mod	[Nm]	Mean effective engine torque
Trq_MeanFric_Engine	[Nm]	Mean friction torque
Trq_MeanInd_Engine	[Nm]	Mean induced engine torque
Xsi_Air_Comb	[0_1]	Mass fraction of the air after the combustion
Xsi_Exh_Comb	[0_1]	Mass fraction of the exhaust gas after the combustion
Xsi_Fuel_Comb	[0_1]	Mass fraction of the fuel after the combustion

Blocks

- Wall Film (ASM Gasoline Engine Reference 🕮)
- Cylinder Inlet (ASM Gasoline Engine Reference 🕮)
- Stratified Combustion Torque (ASM Gasoline Engine Reference 🕮)
- Combustion Temperature CI (ASM Gasoline Engine Reference 🕮)
- Homogeneous Combustion Torque (ASM Gasoline Engine Reference 🕮)
- Combustion Temperature SI (ASM Gasoline Engine Reference 🕮)
- Friction Torque (ASM Gasoline Engine Reference 🕮)

- Crankcase (ASM Gasoline Engine Reference 🕮)
- Pump Torque (ASM Gasoline Engine Reference 🕮)
- Combustion Mode Switch (ASM Gasoline Engine Reference 🕮)
- Camshaft Phaser Intake (ASM Gasoline Engine Reference 🕮)
- Camshaft Phaser Exhaust (ASM Gasoline Engine Reference 🕮)
- Mass Fraction (ASM Gasoline Engine Reference 🕮)

Soft ECU Gasoline Subsystem

Overview

The SOFT_ECU_GASOLINE block serves as basic gasoline engine ECU controller software without any diagnostics and is used to test the engine model in closed-loop operation when no real ECU is connected. Its inputs are standard sensor signals and the outputs are standard actuators.

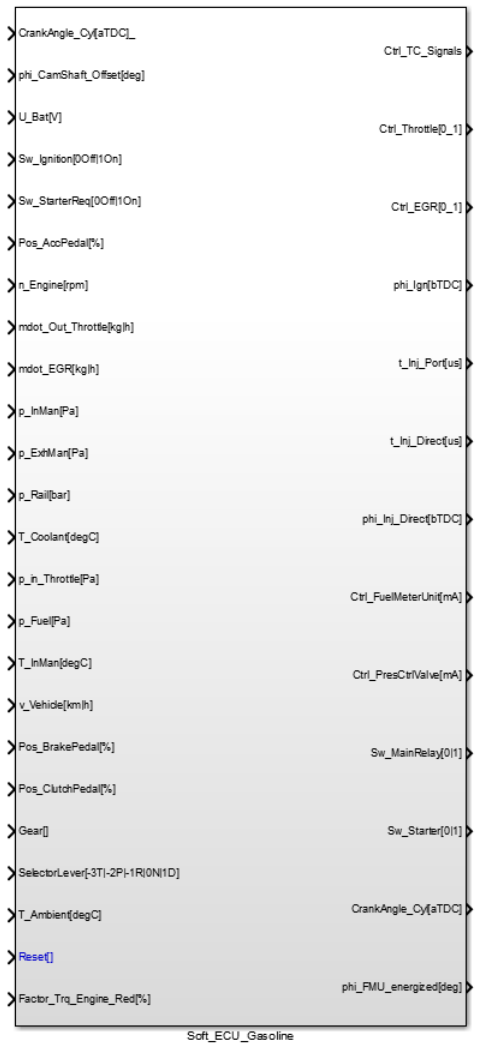

The soft ECU can be divided into three sections with the following functionalities:

- Pre-calculation and operation mode selection
- Control algorithms
- Signal selection

The following illustration shows these three sections and the contained subsystems.

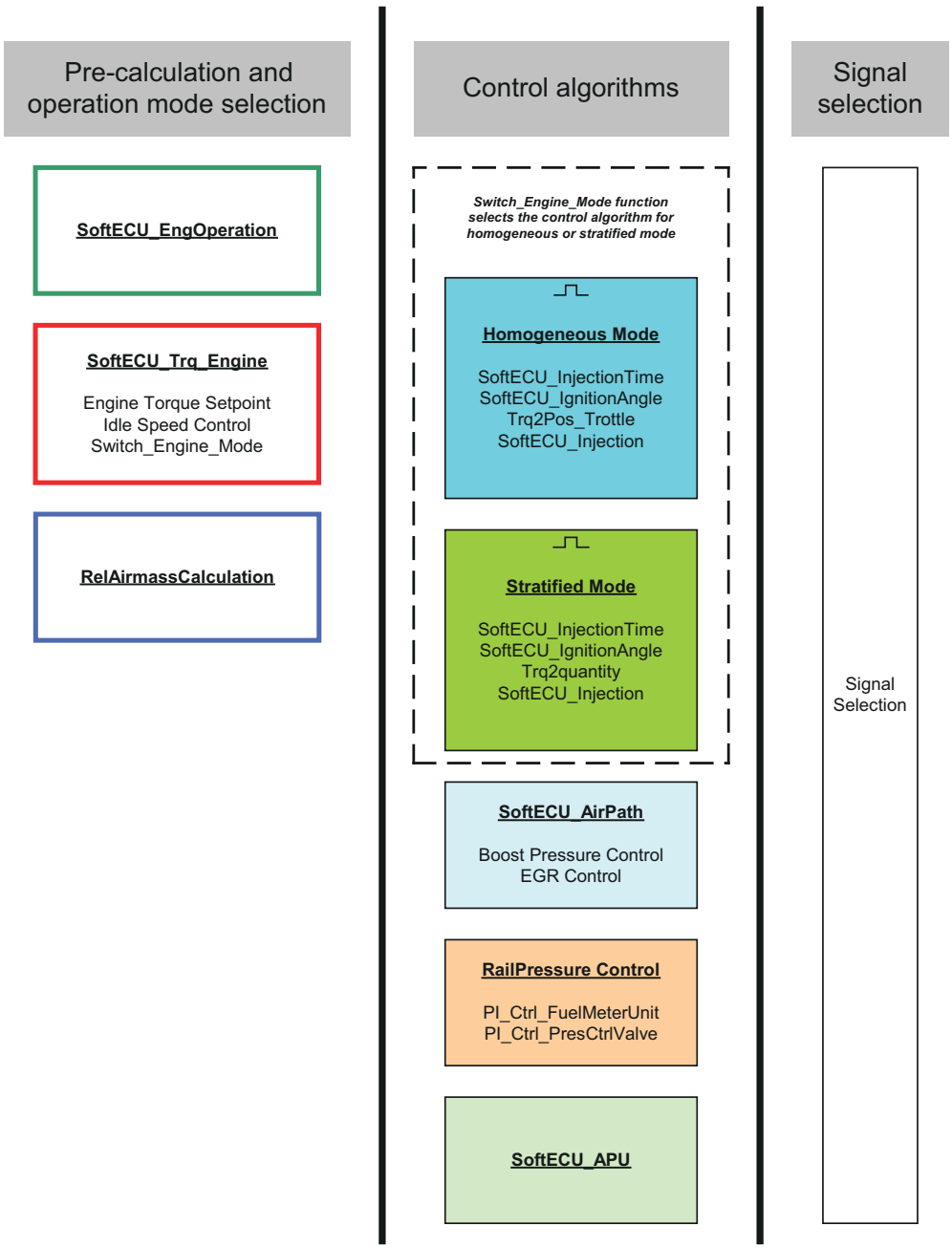

Pre-calculation and operation mode selection This part manages the sensor data preparation for the control algorithms and detects the current engine operating point. The section contains the following subsystems:

- SoftECU_EngOperation - Engine operation detection
- SoftECU_Trq_Engine - Engine torque calculation and engine operation mode detection
- RelAirmass Calculation - Calculation of relative air mass from the current throttle air mass flow

In SoftECU_EngOperation, the engine operation state is detected from the ignition and starter request switch and engine speed. It also activates the starter and the main relay (terminal 87). Four different engine states are possible.

- Engine off = 0
- Ignition on = 1
- Ignition on and starter activated = 2
- Engine is running = 3
- Ignition is switched of, shutdown active = 4

The SoftECU_Trq_Engine contains all torque-based functions. The setpoint is calculated from the engine speed and accelerator pedal position. For small accelerator pedal positions, the idle speed controller is active. Additionally, the engine operation mode detection is preformed. This function detects the combustion mode (stratified or homogeneous combustion) depending on the requested engine torque and the current engine speed. The following illustration shows the switch conditions.

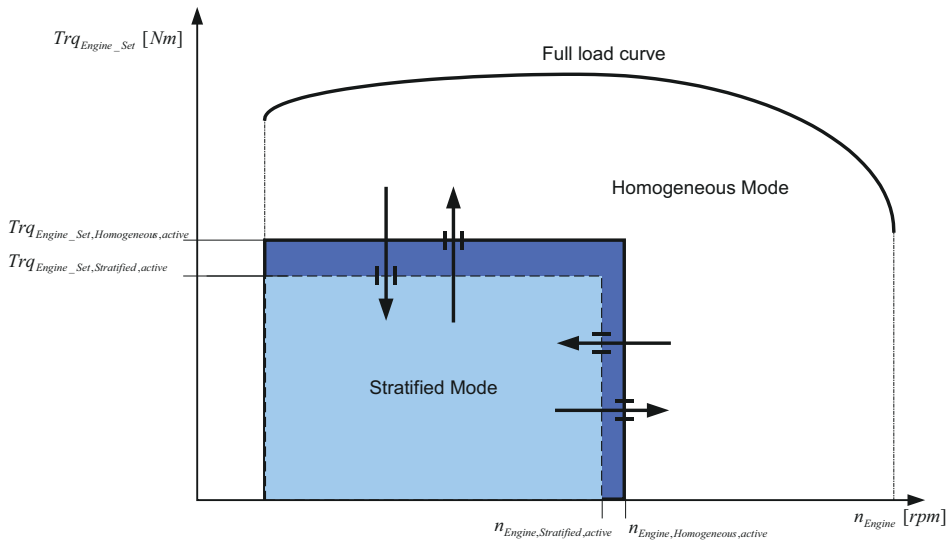

In RelAirmass Calculation, the actual relative air mass is calculated.

Control algorithms This part holds all control algorithm for offline operation of the engine model. The section contains the following subsystems.

- Homogeneous Mode - Enabled subsystem for homogeneous engine operating point controller.
- Stratified Mode - Enabled subsystem for stratified engine operating point controller.

- SoftECU_AirPath - Controller for engine air path
- RailPressure Control - Controller for rail pressure
- SoftECU APU - Calculation of the cylinder individual crank angle

In Homogeneous Mode, the engine is operated with a stoichiometric air/fuel ratio. This subsystem is enabled by a signal from SoftECU_Trq_Engine if a homogeneous operation mode has been detected. The stratified mode will be disabled while the homogeneous mode is activated. The subsystem contains controllers for injection time calculation for manifold injection, ignition angle calculation, controller for the throttle position from the desired engine torque and injection time calculation for direct injection.

In Stratified Mode, the engine is operated with a lean air/fuel ratio. This subsystem is enabled by a signal from SoftECU_Trq_Engine if a stratified operation mode has been detected. The homogeneous mode will be disabled while the stratified mode is activated. The subsystem contains controllers for injection time calculation for direct injection and ignition angle calculation.

The SoftECU_AirPath contains control functions for the EGR valve and the turbine of the turbocharger (wastegate or VGT).

Signal selection This part selects the corresponding control signals for homogeneous or stratified engine operation mode.

Inports

The following table shows the inports:

Name	Unit	Description
CrankAngle_Cyl	[aTDC]	Vector with crank angles for each cylinder
Factor_Trq_Engine_Red	[%]	Engine torque reduction factor when shifting gears
Gear	[]	Gear
mdot_EGR	[kg/h]	Mass flow through the EGR valve
mdot_Out_Throttle	[kg/h]	Mass flow through the throttle
n_Engine	[rpm]	Engine speed
p_ExhMan	[Pa]	Exhaust manifold pressure
p_Fuel	[Pa]	Port injector input pressure
p_in_Throttle	[Pa]	Input pressure of throttle
p_InMan	[Pa]	Intake manifold pressure
p_Rail	[bar]	Rail pressure
phi_CamShaft_Offset	[deg]	Camshaft offset due to valve train variability
Pos_AccPedal	[%]	Accelerator pedal position
Pos_BrakePedal	[%]	Brake pedal position
Pos_ClutchPedal	[%]	Clutch pedal position
Reset	[]	Reset of states
SelectorLever	[-3|-2|-1|0|1]	Selector lever position: ▪ -3: TipShift ▪ -2: Park ▪ -1: Reverse

Name	Unit	Description
		▪ 0: Neutral ▪ 1: Drive
Sw_Ignition	[0|1]	Ignition signal (terminal 15): ▪ 0: Off ▪ 1: On
Sw_StarterReq	[0|1]	Starter request signal (usually sent to engine ECU): ▪ 0: Off ▪ 1: On
T_Ambient	[°C]	Ambient temperature
T_Coolant	[°C]	Coolant temperature
T_InMan	[°C]	Temperature in the intake manifold
U_Bat	[V]	Battery voltage
v_Vehicle	[km/h]	Vehicle velocity

Outports

The following table shows the outports:

Name	Unit	Description
CrankAngle_Cyl	[aTDC]	Vector with crank angles for each cylinder
Ctrl_EGR	[0_1]	Control signal of electrical EGR valve
Ctrl_FuelMeterUnit	[mA]	Control signal of fuel metering unit for common rail
Ctrl_PresCtrlValve	[mA]	Control signal of pressure control valve for common rail
Ctrl_TC_Signals	[0_1]	Turbocharger control signal bus
Ctrl_Throttle	[0_1]	Control signal of electrical throttle valve
phi_FMU_energized	[deg]	Start of fuel metering unit's control
phi_Ign	[bTDC]	Ignition angle vector (cylinder 1, ..., cylinder n)
phi_Inj_Direct	[bTDC]	Direct injection angle vector (cylinder 1 pulse 1, cylinder 1 pulse 2, ..., cylinder n pulse m)
Sw_MainRelay	[0|1]	Activate switch for main relay from ECU
Sw_Starter	[0|1]	Starter activate switch (output of ECU)
t_Inj_Direct	[us]	Direct injection time vector (cylinder 1 pulse 1, cylinder 1 pulse 2, ..., cylinder n pulse m)
t_Inj_Port	[us]	Port injection time vector (cylinder 1 pulse 1, cylinder 1 pulse 2, ..., cylinder n pulse m)

Blocks and subsystems

- SoftECU Setup (ASM Gasoline Engine Reference 🕮).
- Engine Operation (ASM Gasoline Engine Reference 🕮).
- Injector Mode (ASM Gasoline Engine Reference 🕮).
- Relative Air Mass Calculation (ASM Gasoline Engine Reference 🕮).
- Crank Angle Calculation (ASM Gasoline Engine Reference 🕮).
- Start-Stop System (ASM Gasoline Engine Reference 🕮).
- Air Path Control Subsystem on page 391.

- Torque Control Subsystem on page 393.
- FuelSystem Control.

Related topics

References

History of the SOFT_ECU_GASOLINE Block (ASM Gasoline Engine Reference 🕮)

Air Path Control Subsystem

Overview

The **AirPathControl** collects the controller for the air path. The external setpoint of the controller are connected with to the measurement interface that for test purpose the measurement data could be used as setpoint.

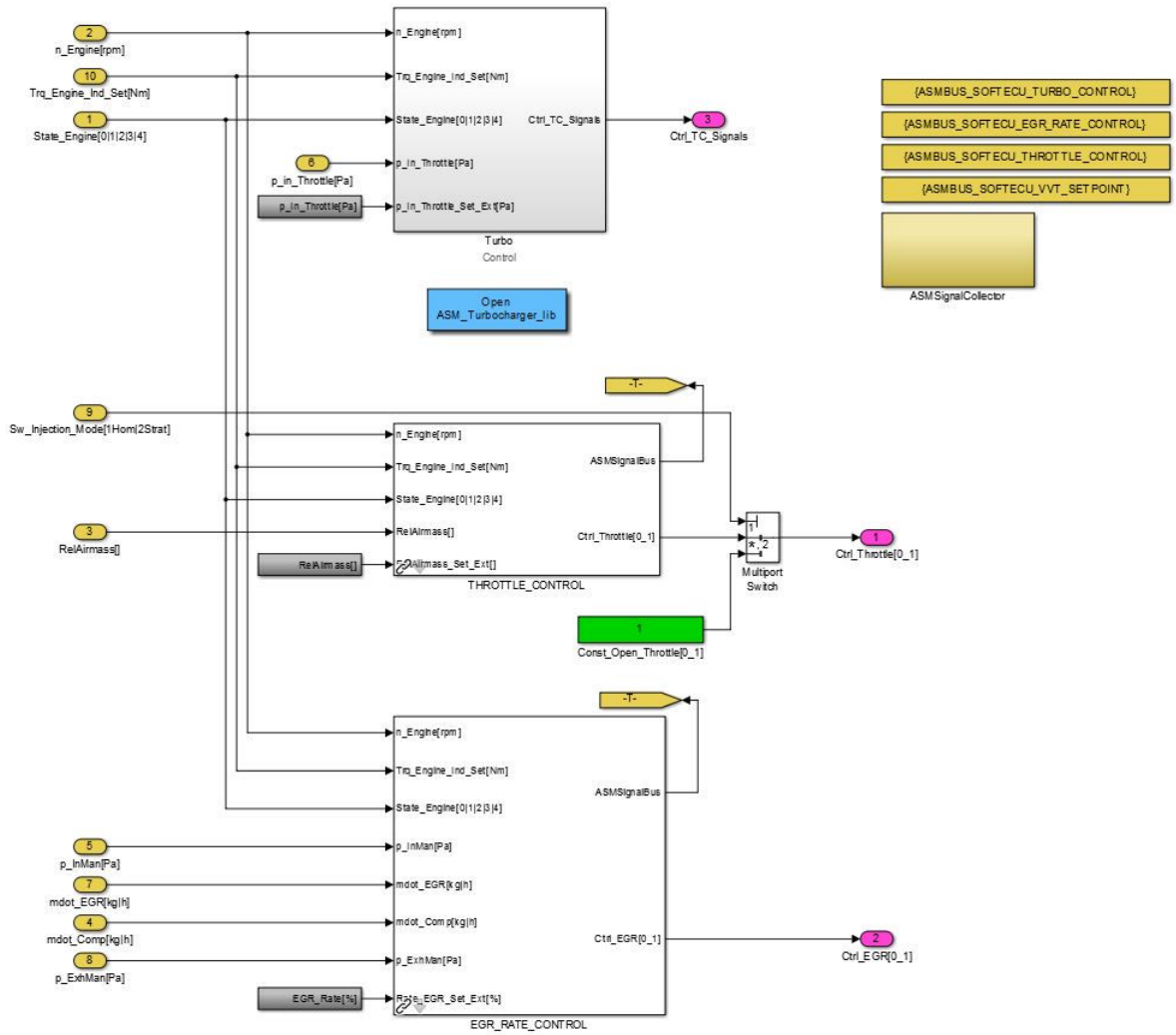

Inports

The following table shows the inports:

Name	Unit	Description
mdot_Comp	[kg/h]	Mass flow through compressor
mdot_EGR	[kg/h]	Mass flow through the EGR valve
n_Engine	[rpm]	Engine speed
p_ExhMan	[Pa]	Exhaust manifold pressure
p_InMan	[Pa]	Intake manifold pressure
RelAirmass	[]	Relative air mass flow
State_Engine	[0|1|2|3|4]	Engine state ▪ 0: Engine off ▪ 1: Ignition on ▪ 2: Ignition on and starter activated

Name	Unit	Description
		▪ 3: Engine is running ▪ 4: Ignition is switched off, shutdown active
Sw_Injection_Mode	[1|2]	Injection mode ▪ 1: Homogeneous ▪ 2: Stratified
Trq_Engine_Ind_Set	[Nm]	Induced engine torque setpoint

Outports

The following table shows the outports:

Name	Unit	Description
Ctrl_EGR	[0_1]	Control signal of electrical LP EGR valve
Ctrl_TC_Signals	[]	Turbocharger control signal bus
Ctrl_Throttle	[0_1]	Control signal of electrical throttle valve
phi_EO_Set	[deg]	Exhaust valve open setpoint
phi_IO_Set	[deg]	Inlet valve open setpoint

Blocks

- EGR Rate Control (ASM Gasoline Engine Reference 🕮)
- Throttle Control (ASM Gasoline Engine Reference 🕮)
- VVT Setpoint (ASM Base InCylinder Reference 🕮)

Torque Control Subsystem

Description

In the TorqueControl block the induced engine torque setpoint is estimated. The driver desired toque is lifted by the idle speed controller to keep the idle speed.

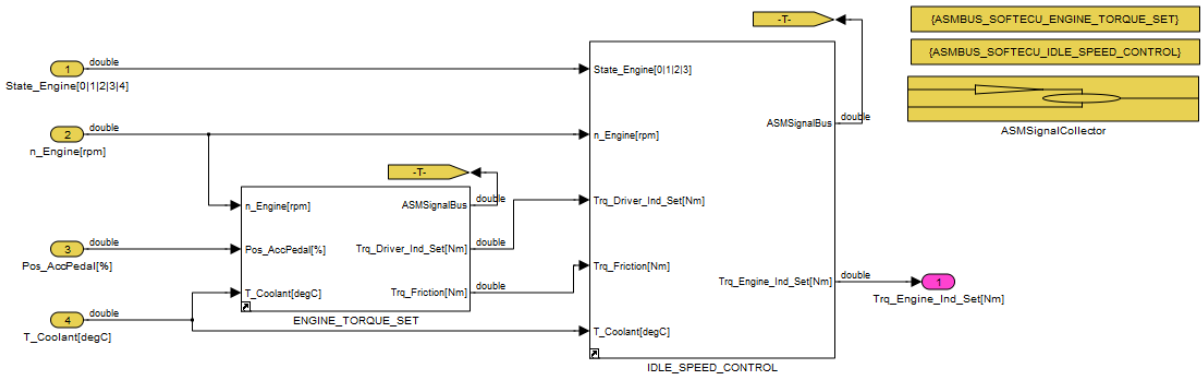

Inports

The following table shows the inports:

Name	Unit	Description
n_Engine	[rpm]	Engine speed
Pos_AccPedal	[%]	Accelerator pedal position
State_Engine	[0|1|2|3|4]	Engine state ▪ 0: Engine off ▪ 1: Ignition on ▪ 2: Ignition on and starter activated ▪ 3: Engine is running ▪ 4: Ignition is switched off, shutdown active
T_Coolant	[°C]	Coolant temperature

Outports

The following table shows the outports:

Name	Unit	Description
Trq_Engine_Ind_Set	[Nm]	Induced engine torque setpoint

Blocks

- Engine Torque Set (ASM Gasoline Engine Reference 🕮)
- Engine Torque Set Intervention (ASM Gasoline Engine Reference 🕮)
- Idle Speed Control (ASM Gasoline Engine Reference 🕮)

Subsystems of the Environment Traffic Module

Where to go from here

Information in this section

Maneuver Submodule.....396
The **Maneuver** submodule controls the vehicle, road, and driver models to perform maneuvers.

Road Submodule.....399
The **Road** submodule provides information about the road the vehicle moves on.

Fellow Movement Subsystem.....400
The **FellowMovement** subsystem simulates the fellows' movements by interpreting the current traffic scenario.

Object Parameters Subsystem.....401
The **ObjectParameters** subsystem provides properties of the traffic objects, both static and moving, and the discrete objects to be used by the sensors subsystem.

Collision Sensor Subsystem.....402
The collision sensor detects collisions between the ASM vehicle and surrounding objects or fellow vehicles with the contour attribute.

Object Sensor 2-D Subsystem.....404
The **Object_Sensor_2D** subsystem simulates a sensor chain consisting of an amount of **Object_Sensor_2D** instances. Each sensor instance can be parameterized regarding mounting position, orientation, scope zone, and scheduling parameters.

Object Data Subsystem.....407
The **ObjectData** subsystem provides more detailed information about objects detected by the **Object_Sensor_2D**.

Schedule and Calculate Sensor Subsystem.....408
The **ScheduleAndCalculateSensor** block implements the sensor scheduler and the detection algorithm.

Sensor Mapping Subsystem.....411
The **SensorMapping** subsystem maps the results of the sensor calculation of the current simulation step to the specific sensor chain instances.

Sensor Parameters Subsystem.....413
The **SensorParameters** subsystem contains the parameters of the sensor instances within this sensor chain.

Object Sensor 3-D Subsystem.....415
The **Object_Sensor_3D** subsystem simulates a sensor chain consisting of an amount of **Object_Sensor_3D** instances. Each sensor instance can be parameterized regarding mounting position, orientation, scope zone, and scheduling parameters.

Custom Points Subsystem.....417
The **CustomPoints** subsystem provides implementations of your own applications based on the calculated base properties of the custom points.

Object Data Subsystem.....419
The **ObjectData** subsystem provides more detailed information about objects detected by the **Object_Sensor_3D**.

Radar Effects Subsystem.....422
Based on calculated base properties, the **RadarEffects** subsystem simulates the effects of radar sensors.

Schedule And Calculate Sensor Subsystem.....426
The **ScheduleAndCalculateSensor** subsystem implements the sensor scheduler and the detection algorithm.

Sensor Mapping Subsystem.....428
The **SensorMapping** subsystem maps the results of the sensor calculation of the current simulation step to the specific sensor chain instances.

Sensor Parameters Subsystem.....430
The **SensorParameters** subsystem contains the parameters of the sensor instances within this sensor chain.

Traffic Sign Sensor Subsystem.....431
The **Traffic_Sign_Sensor** detects static objects of the *traffic sign* type and returns the properties of traffic signs detected within the sensor scope zone.

Groundtruth Submodule.....432
The **GroundTruth** submodule provides groundtruth information for further processing in sensor models.

Maneuver Submodule

Overview

Maneuvers are predefined sequences of driving instructions for simulating a variety of driving situations with the vehicle model. Typical maneuvers are braking on a road with different friction on two lanes (μ-split maneuver), performing a double-lane change, step steering, and the Fishhook maneuver. A maneuver also defines how to drive on road networks on predefined routes by specifying where to do lane changes, when to stop at junctions, etc. The submodule controls the vehicle, road, and driver models to perform maneuvers.

A maneuver is made up of sequences that comprise one ore more segments. Each segment has a segment end condition. When this condition is met, the next segment is executed. After the last segment of a sequence is simulated, either the start condition of the next sequence is evaluated or the maneuver terminates if all sequences are finished.

The core of the submodule is the **MANEUVER_SCHEDULER** block. Refer to Maneuver Scheduler (ASM Environment Reference 🕮).

Example

The μ-split maneuver is described as an aid to understanding maneuvers in general.

Maneuver segment	0	1	2
Description	Init and standstill	Accelerate to a certain velocity, drive until low mue spot	Brake

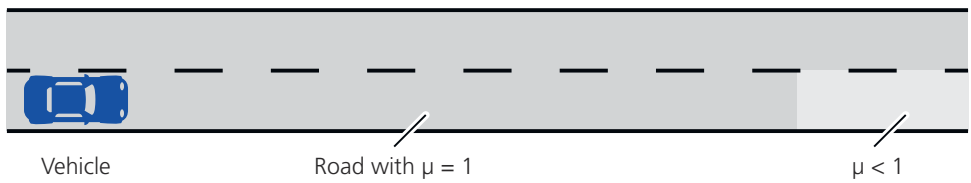

Reference velocity

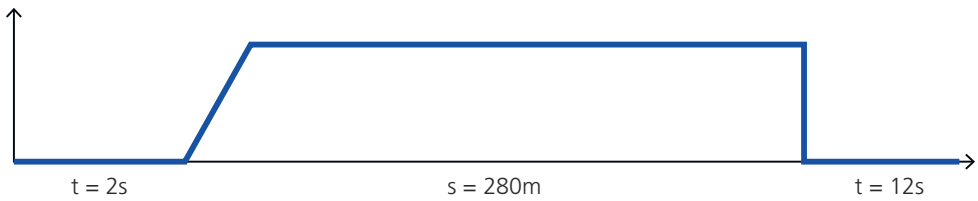

Brake pedal

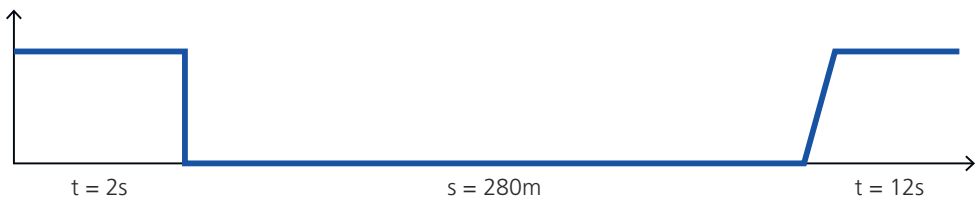

A route on a straight road with a low μ value on one lane after 280 m is assumed for this maneuver. The aim is to accelerate the vehicle to a certain velocity, drive the vehicle until the μ spot is reached, and initialize braking. This task is split into sequential steps that the driver and vehicle models have to perform.

- The maneuver starts with an initialization phase. The initial vehicle position is set to 0 m. After two seconds, the initialization phase ends.
- In the first segment, the vehicle drives to the low μ area. A segment with a length of 280 m is specified. The steering wheel is controlled by the driver model, which keeps the vehicle on the road. A reference velocity profile is defined so that a final velocity is reached with reasonable acceleration. The pedals and gears are controlled by the driver model.
- At the start of the low μ area, the driver model initiates the braking process. It holds the last steering wheel angle and opens the clutch.

Maneuver types

There are two maneuver types.

- In *stimulus* maneuvers, the vehicle model is controlled by stimulus signals for accelerator pedal, brake pedal, clutch pedal, gear, and steering wheel.

- In *controlled* maneuvers, the driver model controls the vehicle model. Accelerator, brake and clutch pedal positions, and gear are controlled by the driver model's longitudinal controller. The steering wheel is controlled by the lateral controller.

Combinations of both maneuver types are possible in the maneuver segments.

Mode signals

The maneuver uses mode signals to control the vehicle, driver, and road models. These enable model components which are used in the current maneuver segment.

The accelerator and brake pedal have *stimulus* and *driver* modes. In *stimulus* mode, the reference signals for both pedals in the vehicle model are provided by the maneuver. In *driver* mode, the driver controls accelerator and brake pedal.

The clutch pedal and gear have *stimulus*, *driver*, and *open clutch* modes. In *stimulus* mode, the reference signals for the vehicle model are provided by the maneuver. In *driver* mode, the driver controls clutch and gear. In *open clutch* mode, the clutch is opened by the maneuver, the current gear is held.

The steering wheel has *stimulus*, *driver*, and *fixed steering* modes. In *stimulus* mode the maneuver provides a stimulus signal for the steering wheel. In *driver* mode the driver controls the steering wheel. In *fixed steering* mode, the current steering wheel angle is held.

The road model has *no road*, *straight*, *circle*, and *road* modes. In *no road* mode, the vehicle can perform stimulus maneuvers on a flat area. The *straight* and *circle* modes are for straight and circular driving on a flat area. In *road* mode, the road information is provided by the road model.

Example

The following illustration shows the use of mode signals in the µ-split maneuver.

Maneuver segment	0	1	2
Description	Init and standstill	Accelerate unit a certain veocity, drive until low mue spot	Brake
Steering mode	Stimulus	Driver	Fix steering
AccBr mode	Stimulus	Driver	Stimulus
Gear clutch mode	Stimulus	Driver	Open Clutch

Reference velocity

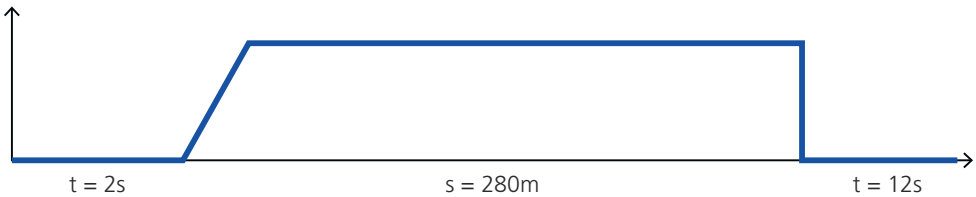

Brake pedal

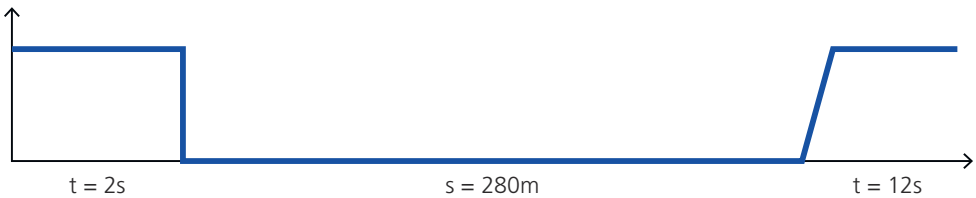

Maneuver definition

Maneuvers are defined with the **Scenario Editor** in ModelDesk. Refer to Basics of the Scenario Editor (ModelDesk Scenario Creation 🕮). The maneuver definition that is used in the model is stored in a vector. This vector contains data on the steps that the model has to carry out sequentially as well as the table reference data for the pedals, gears, steering wheel, and vehicle velocity.

Related topics

Basics

Basics of the Scenario Editor (ModelDesk Scenario Creation 🕮)

Road Submodule

Overview

The **Road** submodule provides information about the road the vehicle moves on. This information is calculated in the road model and forwarded to both the vehicle and driver models. Different road modes are selected by the maneuver according to the maneuver definition. Roads can be built up using the **Road Generator** in ModelDesk.

Subsystems

- Ambient (ASM Environment Reference 🕮)
- Basic Road (ASM Environment Reference 🕮)
- GPS Position (ASM Environment Reference 🕮)
- Lane Network (ASM Environment Reference 🕮)
- Lane Sensor Dynamic Parameters (ASM Environment Reference 🕮)
- Lane Sensor Dynamic Output (ASM Environment Reference 🕮)
- Road (ASM Environment Reference 🕮)

Related topics

Basics

Introduction to the Road Generator (ModelDesk Road Creation 🕮)

Fellow Movement Subsystem

Overview

The FellowMovement subsystem simulates the fellows' movements by interpreting the current traffic scenario.

Traffic scenario A traffic scenario defines the movement of the fellow vehicles. The movement of each fellow vehicle is defined in segments. A segment defines the lateral and longitudinal movement of the fellow vehicle for a certain time or distance range. A list of segments defines the movement of the fellow for the whole scenario. The traffic scenario is stored in the traffic vector which is generated using the ModelDesk Traffic Editor.

Inports

The following table shows the inports:

Name	Unit	Description
Maneuver_Signals	[]	Signal bus containing maneuver signals
Object_DataStreams	[]	Signal bus containing object data streams
ObjectParameters_Signals	[]	Signal bus containing traffic object parameter signals
Road_Signals	[]	Signal bus containing road signals
Settings	[]	Signal bus containing settings for traffic

Name	Unit	Description
VehicleDynamics_Signals	[]	Signal bus containing vehicle dynamics signals

Outports

The following table shows the outports:

Name	Unit	Description
FellowMovement_Signals	[]	Signal bus containing information on fellow movement

Related topics

Basics

Basics of Fellows (ModelDesk Scenario Creation 🕮)

Object Parameters Subsystem

Overview

The ObjectParameters subsystem provides properties of the traffic objects, both static and moving, and the discrete objects to be used by the sensors subsystem.

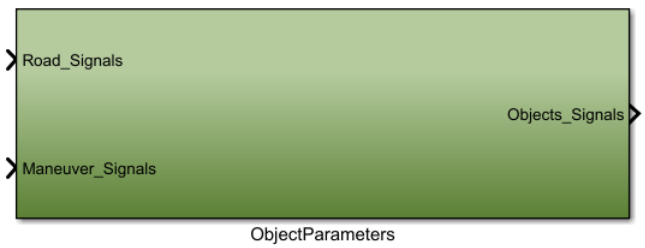

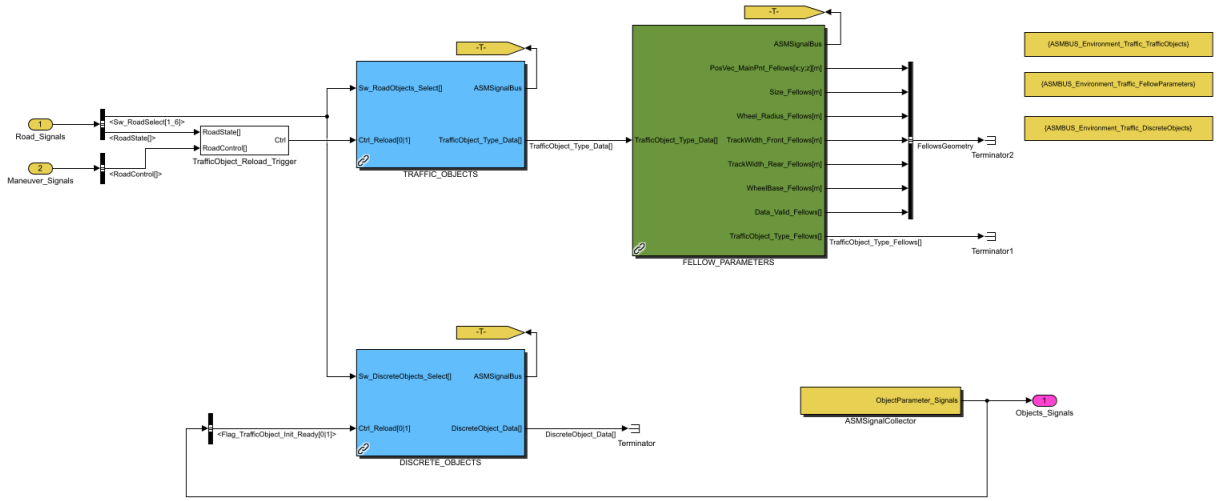

Inports

The following table shows the inports:

Name	Unit	Description
Maneuver_Signals	[]	Signal bus containing maneuver signals
Road_Signals	[]	Signal bus containing road signals

Outports

The following table shows the outports:

Name	Unit	Description
Object_Signals	[]	Signal bus containing parameters of traffic objects used for sensor calculations

Collision Sensor Subsystem

Overview

The collision sensor detects collisions between the ASM vehicle and surrounding objects or fellow vehicles with the *contour* attribute.

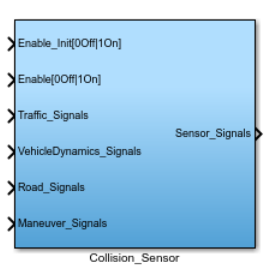

Subsystems

The Collision_Sensor subsystem contains the following blocks:

- Collision Sensor (ASM Traffic Reference 🕮): implements the main sensor algorithm.
- Enable_Collision_Sensor: provides overwriting the incoming Enable signal with *0*. This allows for quickly disabling the collision sensor even if the incoming Enable signal is set to *1*.
- ExternalUserData: provides the parameterization of reference points inside the simulation model. This is an alternative to the specification of reference points in the Traffic Object Manager of ModelDesk.

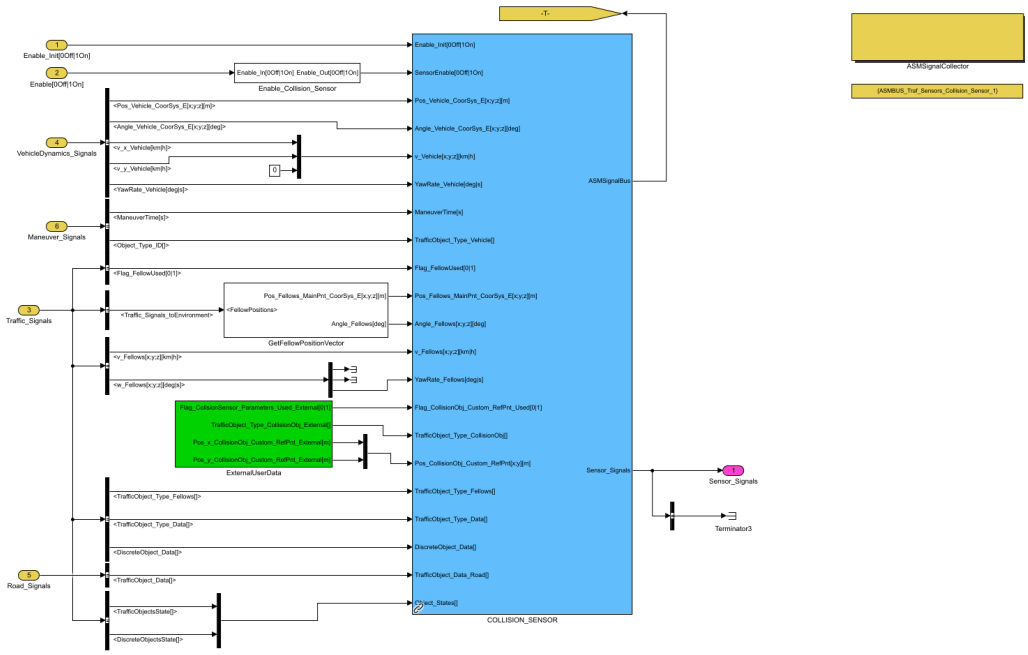

Inports

The following table shows the inports:

Name	Unit	Description
Enable	[0|1]	Enable flag of the sensor chain: ▪ 0: Off ▪ 1: On
Enable_Init	[0|1]	Flag to enable the start of the sensor initialization: ▪ 0: Start of initialization disabled ▪ 1: Start of initialization enabled
Maneuver_Signals	[]	Signal bus containing the maneuver signals.
Road_Signals	[]	Signal bus containing the road signals.
Traffic_Signals	[]	Signal bus containing the traffic signals.
VehicleDynamics_Signals	[]	Signal bus containing the vehicle dynamics signals.

Outports

The following table shows the outports:

Name	Unit	Description
Sensor_Signals	[]	Signal bus containing the sensor output signals.

Related topics

References

Collision Sensor (ASM Traffic Reference 🕮)

Object Sensor 2-D Subsystem

Overview

The **Object_Sensor_2D** subsystem simulates a sensor chain consisting of an amount of **Object_Sensor_2D** instances. Each sensor instance can be parameterized regarding mounting position, orientation, scope zone, and scheduling parameters.

In each simulation step, one sensor instance can be calculated within one sensor chain. A **Sample_And_Hold** block can be used to sample the sensor input signals and thus enable resource-efficient quasi-parallel simulation of sensor instances within one sensor chain. In addition to the quasi-parallel sensor simulation, real parallel sensor simulation can be realized by using multiple instances of the **Object_Sensor_2D** subsystem and thus using multiple sensor chains.

The **Object_Sensor_2D** detects objects with the *contour* attribute. It detects both types of traffic objects, movable and static. The sensor has two detection modes:

- Ray mode: The sensor scope consists of a number of rays. The sensor calculates the intersection of the sensor rays with the contour of objects or continuous shapes within the sensor scope zone, and returns the distance to the closest object or shape for each ray.
- Sector mode: The sensor scope consists of a number of sectors, whereby a sector has a center line and is bounded by two rays. For each sector, the sensor calculates the intersection of the bounding rays with the contour of objects or shapes within the sensor scope zone. The distance of the closest object or shape is determined for each of the two bounding rays. The minimum of the two distances is assigned to the center line of the sector.

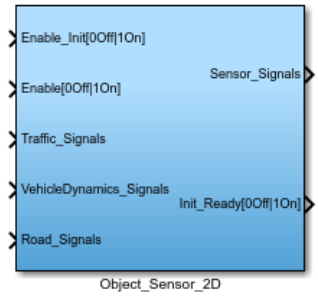

Subsystems and blocks

The subsystem contains the following subsystems and blocks:

- Sensor Parameters Subsystem on page 413: contains the parameters (scope zone geometry and scheduling parameters) of the sensor instances within this sensor chain.
- Schedule and Calculate Sensor Subsystem on page 408: implements the sensor scheduler and the detection algorithm.
- Sensor Mapping Subsystem on page 411: maps the results of the sensor calculations to the single sensor chain instances.
- Enable_Object_Sensor_2D: provides to overwrite the incoming Enable signal with *0*. This allows a quick disabling of the Object Sensor 3-D, even if the incoming Enable signal is set to *1*.
- Object Data Subsystem on page 407: provides more detailed information about detected objects such as: positions in the earth coordinate system, dimensions, custom values, and bounding boxes data in the earth coordinate system.

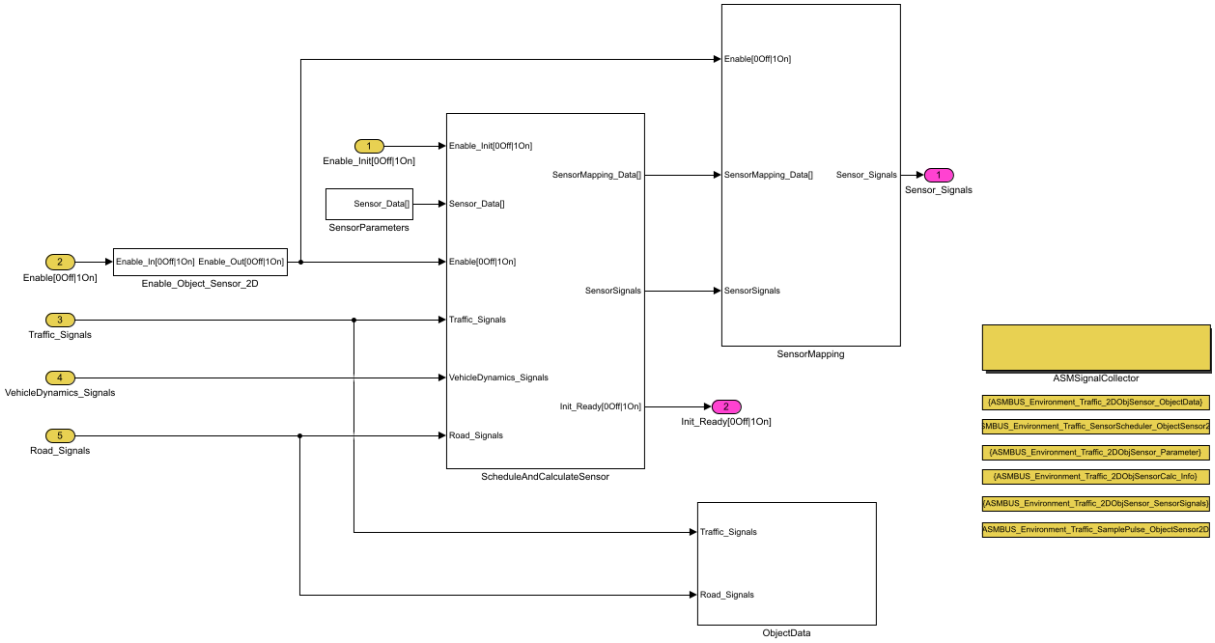

Inports

The following table shows the inports:

Name	Unit	Description
Enable	[0|1]	Enable flag of the sensor chain: ▪ 0: Off ▪ 1: On
Enable_Init	[0|1]	Flag to enable the start of the sensor initialization: ▪ 0: Start of initialization disabled ▪ 1: Start of initialization enabled
Road_Signals	[]	Signal bus containing road signals
Traffic_Signals	[]	Signal bus containing traffic signals
VehicleDynamics_Signals	[]	Signal bus containing vehicle dynamics signals

Outports

The following table shows the outports:

Name	Unit	Description
Init_Ready	[0|1]	Flag to indicate the end of the initialization process: ▪ 0: Initialization is not finished. ▪ 1: Initialization is finished.
Sensor_Signals	[]	Signal bus containing sensor output signals

Related topics

References

History of the OBJECT_SENSOR_2D Block (ASM Traffic Reference 🕮)
Object Sensor 2-D Calculation (ASM Traffic Reference 🕮)
Object Sensor 2-D Mapping (ASM Traffic Reference 🕮)
Object Sensor 2-D Parameters (ASM Traffic Reference 🕮)
Schedule and Calculate Sensor Subsystem..... 408
Sensor Mapping Subsystem..... 411
Sensor Parameters Subsystem..... 413

Object Data Subsystem

Description

The ObjectData subsystem provides more detailed information about objects detected by the Object_Sensor_2D.

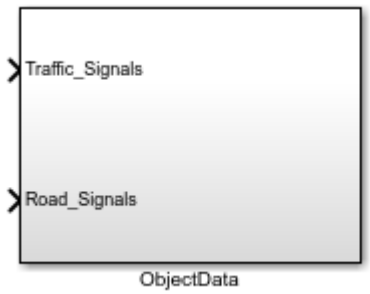

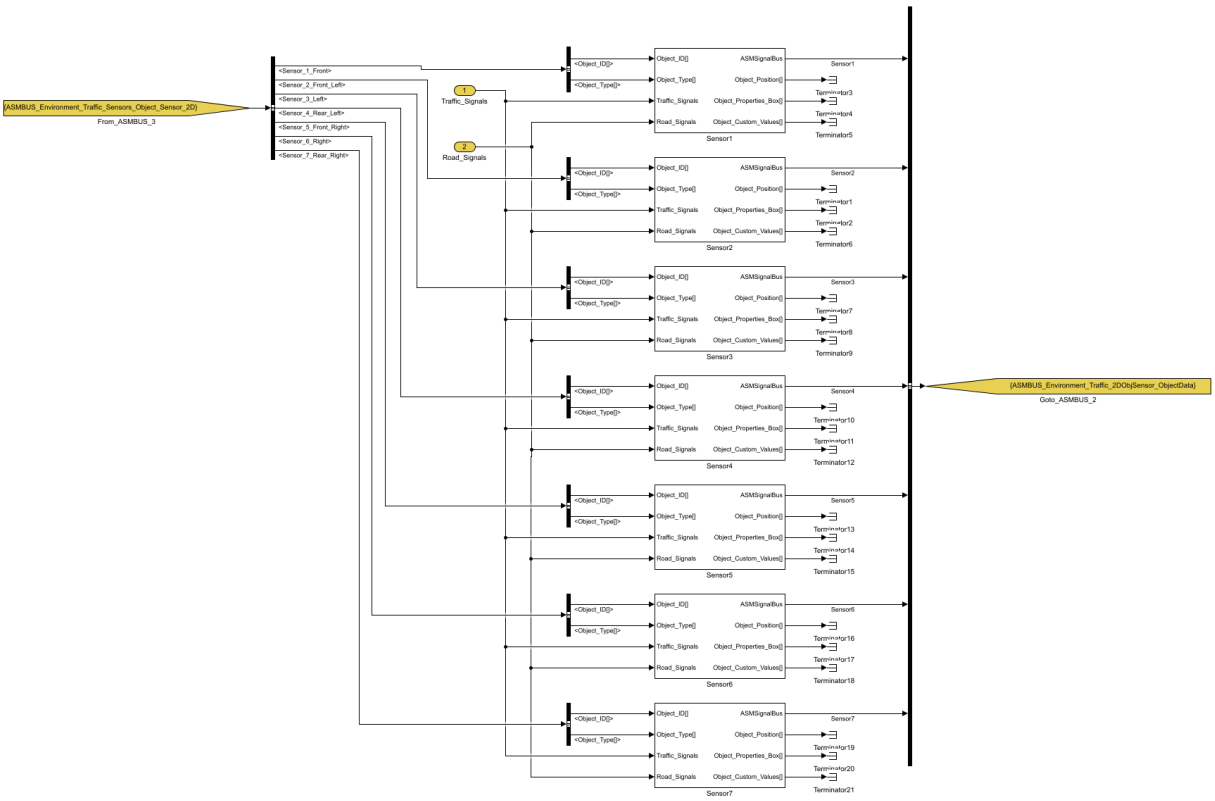

For each sensor instance the following information is calculated for detected objects:

- Position and orientation of detected traffic objects. For details, refer to Object Position (ASM Traffic Reference 🕮).
- Box properties of detected objects as specified in the Traffic Object Manager. For details, refer to Object Properties Box (ASM Traffic Reference 🕮).

- Custom properties of detected objects as specified in the Traffic Object Manager. For details, refer to Custom Sensor Output (ASM Traffic Reference 🕮).

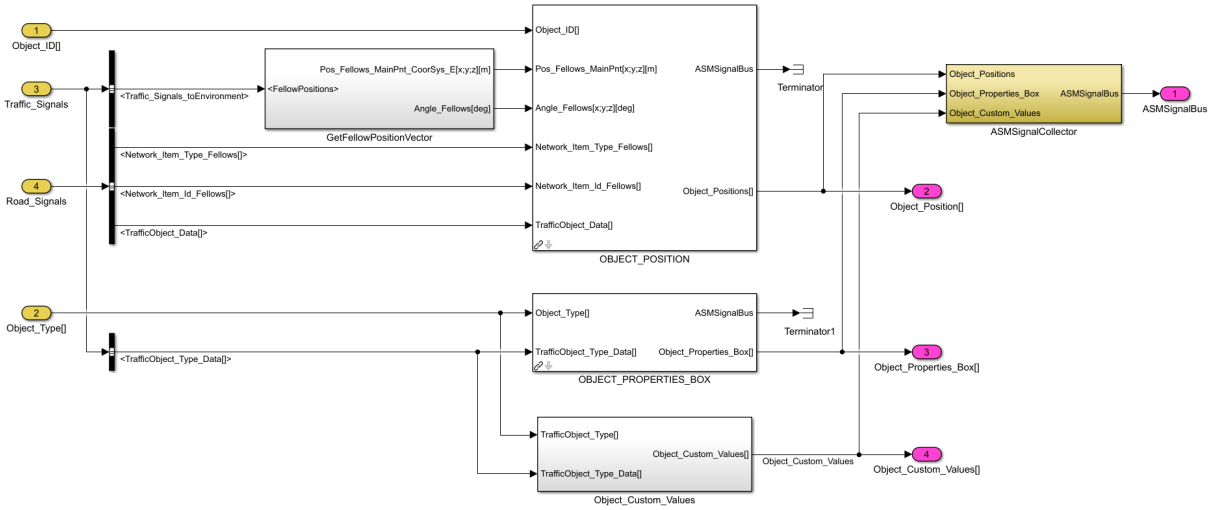

Inports

The following table shows the inports:

Name	Unit	Description
Road_Signals	[]	Signal bus containing road signals.
Traffic_Signals	[]	Signal bus containing traffic signals.

Related topics

References

Custom Sensor Output (ASM Traffic Reference 🕮)
Object Position (ASM Traffic Reference 🕮)
Object Properties Box (ASM Traffic Reference 🕮)

Schedule and Calculate Sensor Subsystem

Description

The ScheduleAndCalculateSensor block implements the sensor scheduler and the detection algorithm. Depending on the particular sensor instances, scheduling parameters of the different sensor instances are calculated.

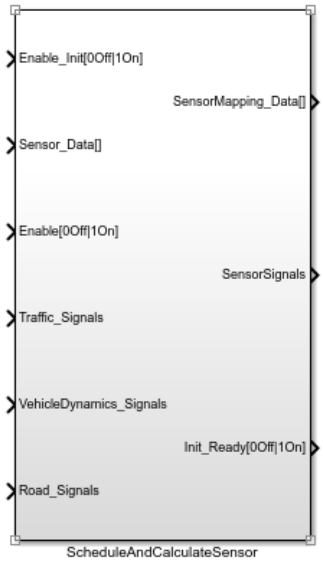

Blocks

The ScheduleAndCalculateSensor subsystem contains six main blocks:

- Sample Pulse (ASM Traffic Reference 🕮): generates a sample pulse for sampling the vehicle and object signals as the input for the sensor calculation, thus enabling quasi-parallel calculation of multiple sensor instances within one sensor chain.
- SampleAndHold: executes the signal sampling, depending on the sample pulse generated by the SAMPLE_PULSE block.
- Sensor Scheduler (ASM Traffic Reference 🕮): calculates the sensor instance that is to be calculated in the current simulation step. The calculation is based on the combined scheduling parameters of all the sensor instances within the sensor chain. The SENSOR_SCHEDULER block provides information on whether scheduling conflicts exist and which sensor instances are involved.
- Object Sensor 2-D Parameter Vectorization (ASM Traffic Reference 🕮): separates the scheduling from the geometry parameters of the sensor instances.
- Object Sensor 2-D Parameter Selection (ASM Traffic Reference 🕮): selects the sensor parameters of the sensor instance that is to be calculated in the current simulation step.
- Object Sensor 2-D Calculation (ASM Traffic Reference 🕮): contains the sensor algorithm for detecting objects.

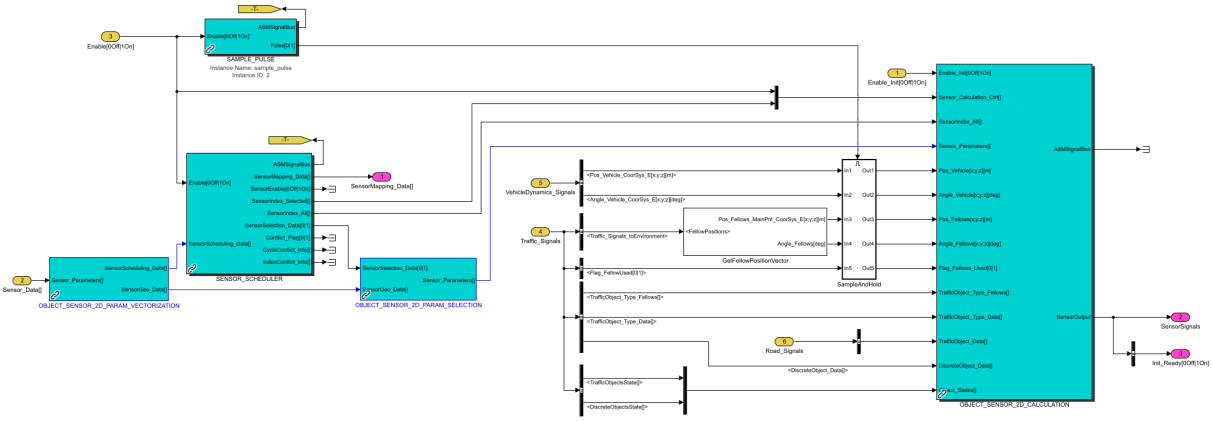

Inports

The following table shows the inports:

Name	Unit	Description
Enable	[0|1]	Enable flag of the sensor chain: ▪ 0: Off ▪ 1: On
Enable_Init	[0|1]	Flag to enable the start of the sensor initialization: ▪ 0: Start of initialization disabled ▪ 1: Start of initialization enabled
Road_Signals	[]	Signal bus containing road signals
Sensor_Data	[]	Vector containing parameters of all sensor instances within the sensor chain
Traffic_Signals	[]	Signal bus containing traffic signals
VehicleDynamics_Signals	[]	Signal bus containing vehicle dynamics signals

Outports

The following table shows the outports:

Name	Unit	Description
Init_Ready	[0|1]	Flag to indicate the end of the initialization process: ▪ 0: Initialization is not finished. ▪ 1: Initialization is finished.
SensorMapping_Data	[]	Signal containing information about the mapping of the sensor instances
SensorSignals	[]	Signal containing results of the sensor calculation for the current sensor instance

Related topics

References

Object Sensor 2-D Subsystem..... 404

Sensor Mapping Subsystem

Description

The SensorMapping subsystem maps the results of the sensor calculation of the current simulation step to the specific sensor chain instances.

The SensorMapping subsystem contains one OBJECT_SENSOR_2D_MAPPING block for each sensor instance of the sensor chain. Each mapping block maps the sensor calculation of the current simulation step to the specific sensor instance. Furthermore, the mapping block implements the additional signal delay, which can be set for each sensor instance separately in the parameter blocks.

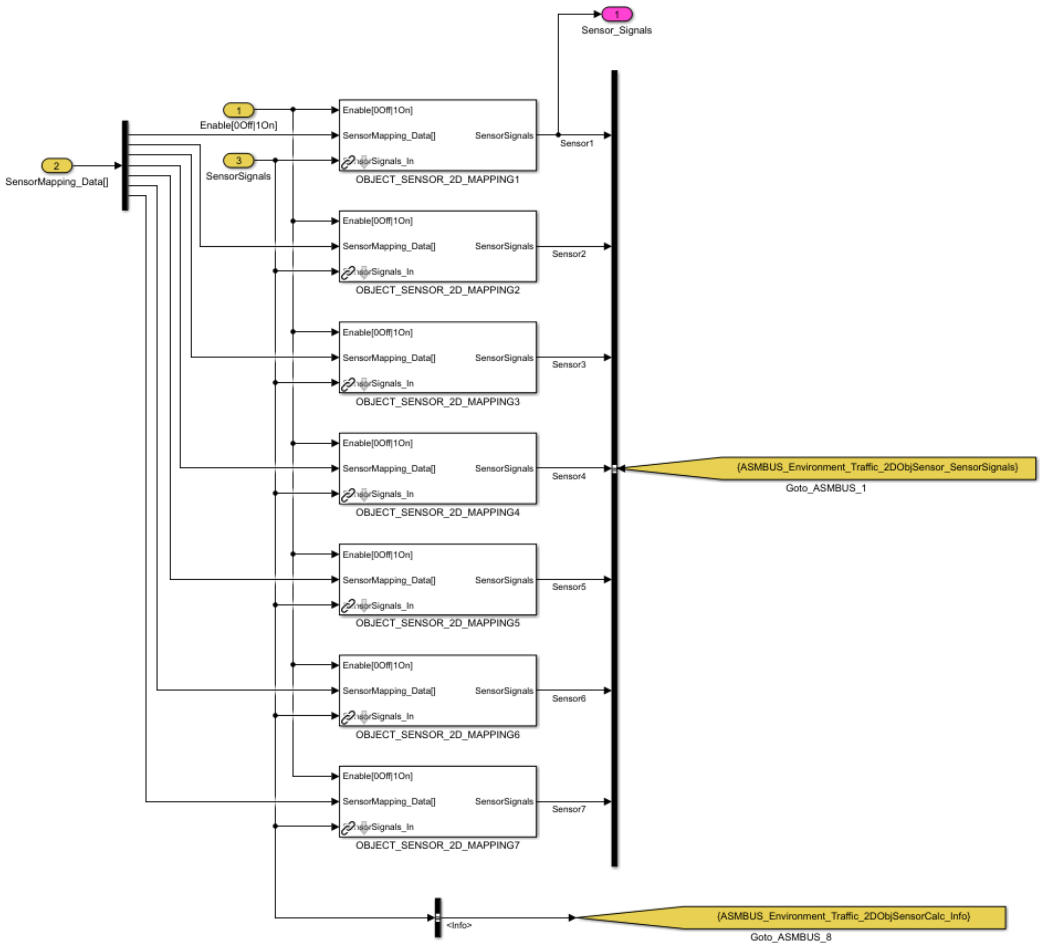

Inports

The following table shows the inports:

Name	Unit	Description
Enable	[0|1]	Enable flag of the sensor chain: ▪ 0: Off ▪ 1: On
SensorMapping_Data	[]	Signal containing information about the mapping of the sensor instances
SensorSignals	[]	Signal containing results of the sensor calculation for the current sensor instance

Outports

The following table shows the outports:

Name	Unit	Description
Sensor_Signals	[]	Signal bus containing sensor output signals

Related topics

References

Object Sensor 2-D Mapping (ASM Traffic Reference 🕮)
Object Sensor 2-D Subsystem 404

Sensor Parameters Subsystem

Description

The SensorParameters subsystem contains the parameters of the sensor instances within this sensor chain.

The parameters of the different sensor instances are concatenated to one vector, which is connected to the ScheduleAndCalculateSensor subsystem.

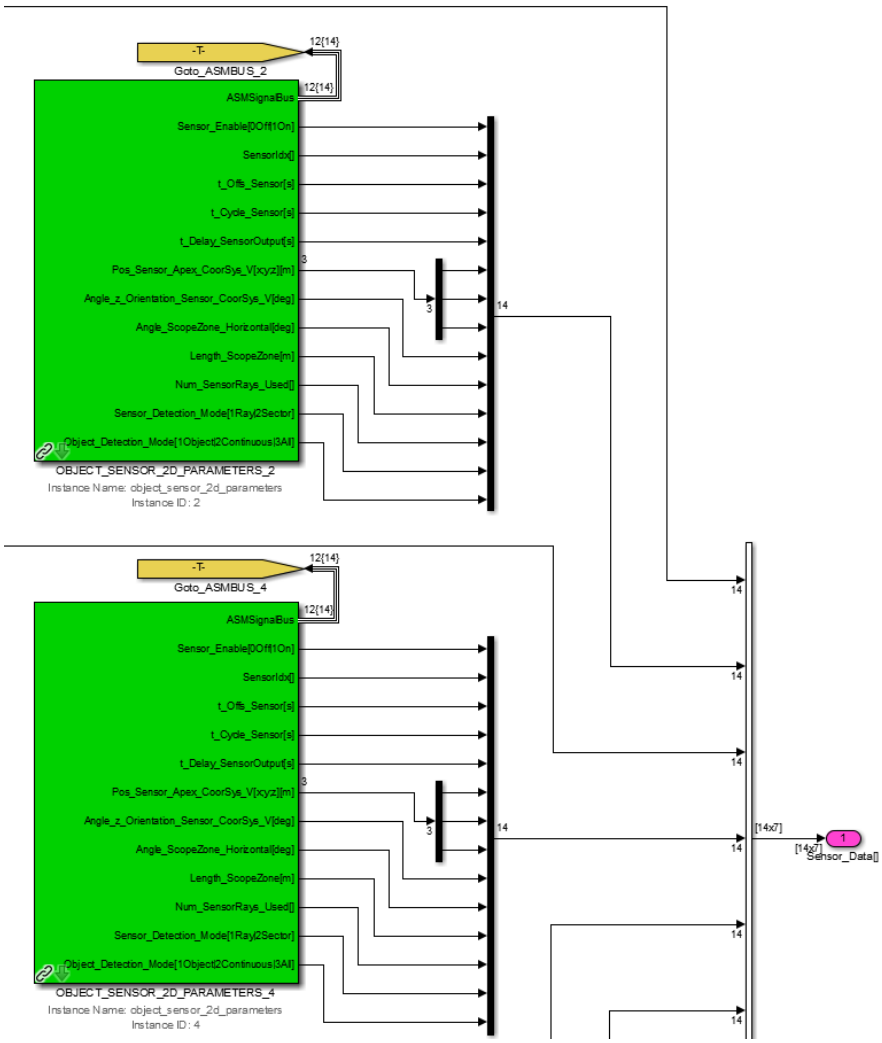

Outports

The following table shows the outports:

Name	Unit	Description
Sensor_Data	[]	Signal containing sensor parameters of all sensor instances within one sensor chain

Related topics

References

Object Sensor 2-D Subsystem 404

Object Sensor 3-D Subsystem

Overview

The Object_Sensor_3D subsystem simulates a sensor chain consisting of an amount of Object_Sensor_3D instances. Each sensor instance can be parameterized regarding mounting position, orientation, scope zone, and scheduling parameters. In each simulation step, one sensor instance can be calculated within one sensor chain. A sample and hold block can be used to sample the sensor input signals and thus enable resource-efficient quasi-parallel simulation of sensor instances within one sensor chain. In addition to the quasi-parallel sensor simulation, real parallel sensor simulation can be realized by using multiple instances of the Object_Sensor_3D subsystem and thus using multiple sensor chains.

The Object_Sensor_3D uses a geometry approach to calculate intersections between the sensor scope zone with road static objects and moving traffic fellows. The detected objects can be sorted by their distances to the sensor apex or the object ID.

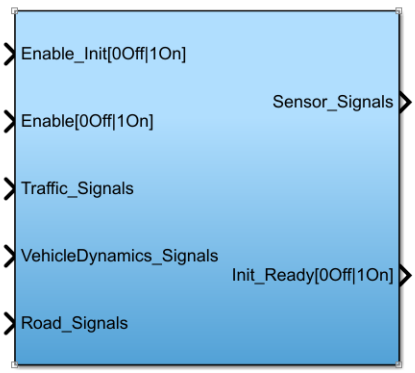

Object_Sensor_3D

Subsystems and blocks

The subsystem contains the following subsystems and blocks:

- Sensor Parameters Subsystem on page 430: contains the parameters (scope zone geometry and scheduling parameters) of the sensor instances within this sensor chain.
- Schedule And Calculate Sensor Subsystem on page 426: mplements the sensor scheduler and the detection algorithm.
- Sensor Mapping Subsystem on page 428: maps the results of the sensor calculations to the single sensor chain instances.
- Radar Effects Subsystem on page 422: contains the simulation of radar sensor effects based on radar reflection points of objects in scope.
- Custom Points Subsystem on page 417: provides access to geometric base properties of custom points of objects in scope.
- Enable_Object_Sensor_3D: provides overwriting the incoming Enable signal with *0*. This allows a quick disabling of the Object Sensor 3-D chain even if the incoming Enable signal is set to *1*.

- Object Data Subsystem on page 419: provides more detailed information about detected objects such as: position, dimensions, custom values, and bounding box data in the earth coordinate system.

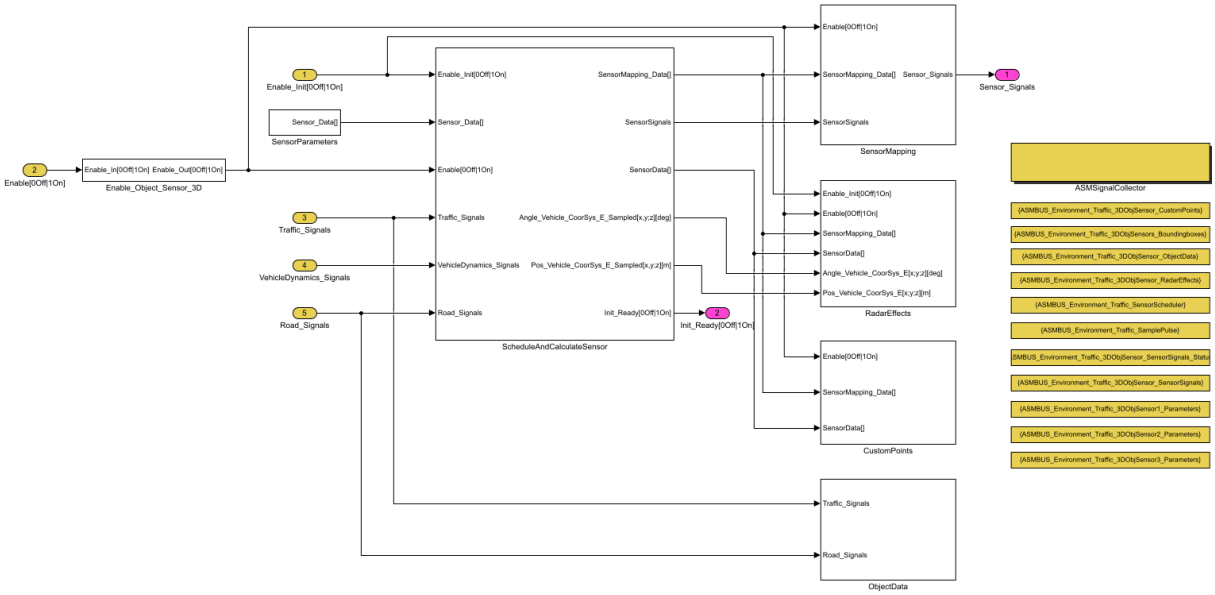

Inports

The following table shows the inports:

Name	Unit	Description
Enable	[0|1]	Enable flag of the sensor chain: ▪ 0: Off ▪ 1: On
Enable_Init	[0|1]	Flag to enable the start of the sensor initialization: ▪ 0: Start of initialization disabled ▪ 1: Start of initialization enabled
Road_Signals	[]	Signal bus containing road signals
Traffic_Signals	[]	Signal bus containing traffic signals
VehicleDynamics_Signals	[]	Signal bus containing vehicle dynamics signals

Outports

The following table shows the outports:

Name	Unit	Description
Init_Ready	[0|1]	Flag to indicate the end of the initialization process: ▪ 0: Initialization is not finished. ▪ 1: Initialization is finished.
Sensor_Signals	[]	Signal bus containing sensor output signals

Custom Points Subsystem

Description

In the ModelDesk Traffic Object Manager, you can define custom points for traffic objects. The OBJECT_SENSOR_3D_CALCULATION block calculates the base properties of custom points for the detected objects in scope. The CustomPoints subsystem provides implementations of your own applications based on the calculated base properties of the custom points.

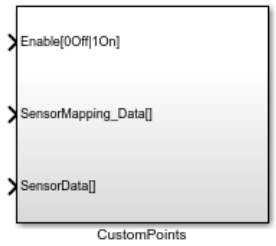

According to the sensor instances of the simulation model, the CustomPoints subsystem is divided into different Sensor subsystems. Each Sensor block processes the custom points that are visible due to the scope geometry of the associated sensor instance.

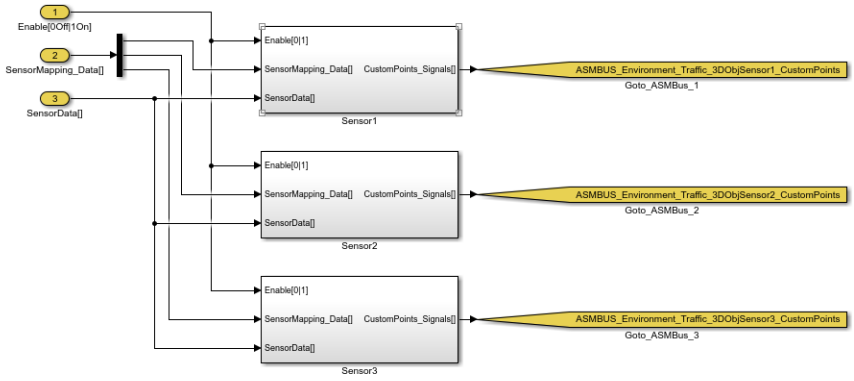

Each Sensor block consists of the CustomPoints and CustomPointsOutput blocks.

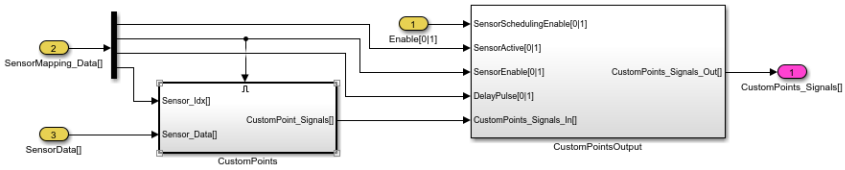

The CustomPoints subsystem contains the CUSTOM_POINTS block.

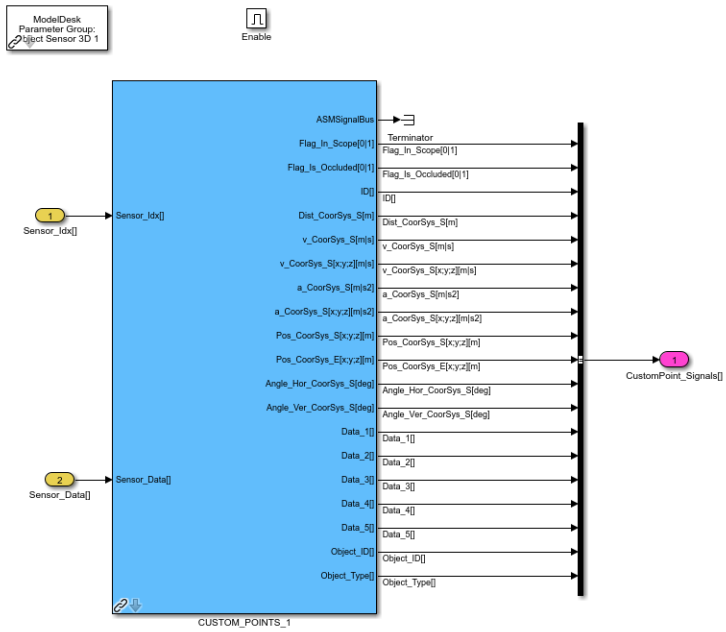

The block provides the base properties of visible custom points of objects in scope. Based on this, you can implement your own applications in the CustomPoints subsystem. For more information, refer to Custom Points (ASM Traffic Reference 🕮).

The CustomPointsOutput block has two tasks:

- Delay of the output of the calculated custom point signals according to the specified output delay of the associated sensor instance. With this, the output of the custom point signals and the output of the signals of the sensor instance in the SensorMapping subsystem are synchronous.
- Reset of the custom points signals if the sensor scheduling is disabled.

Inports

The following table shows the inports:

Name	Unit	Description
Enable	[0|1]	Enable flag of the custom points block chain: ▪ 0: Off, calculation of block chain is switched off ▪ 1: On, calculation of block chain is switched on
SensorMapping_Data	[]	Signal containing information about the mapping of sensor instances
SensorData	[]	The signal contains a reference to calculated base properties of custom points. This signal must be used only by the CUSTOM_POINTS block. No other usage is allowed.

Related topics

HowTos

How to Specify Points for Object Points Sensors (ModelDesk Traffic Object Management 🕮)

Object Data Subsystem

Description

The ObjectData subsystem provides more detailed information about objects detected by the Object_Sensor_3D.

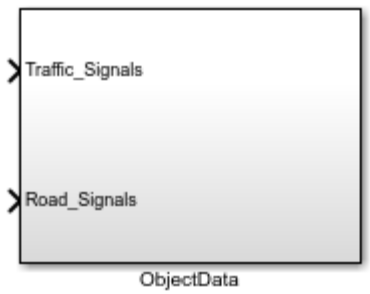

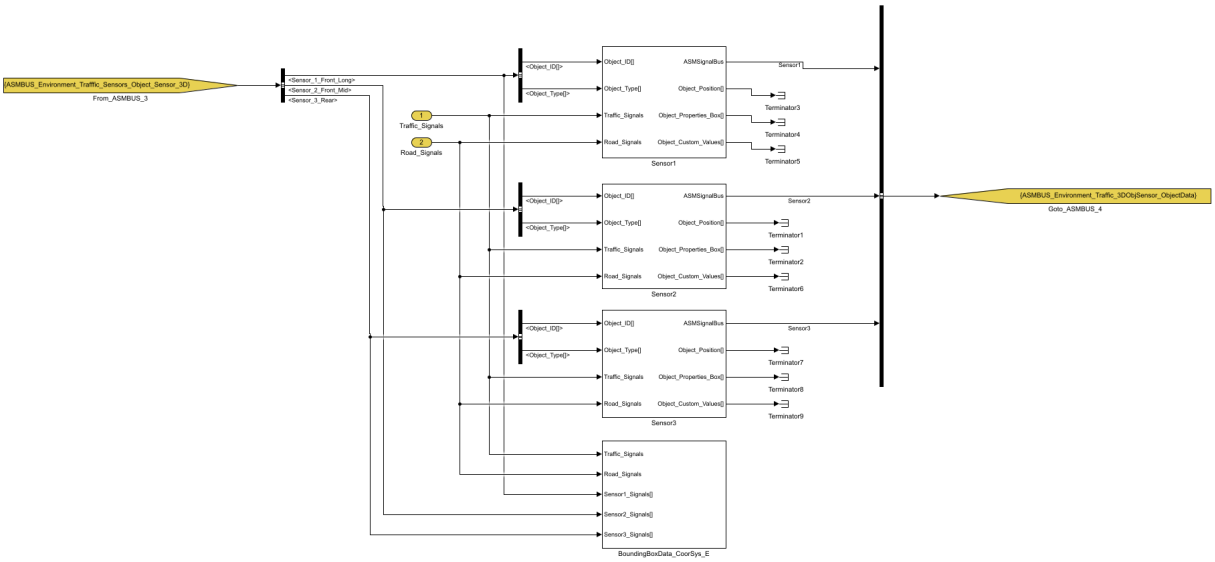

For each sensor instance the following information is calculated for detected objects:

- Position and orientation of detected traffic objects. For details, refer to Object Position (ASM Traffic Reference 🕮).
- Box properties of detected objects as specified in the Traffic Object Manager. For details, refer to Object Properties Box (ASM Traffic Reference 🕮).

- Custom properties of detected objects as specified in the Traffic Object Manager. For details, refer to Custom Sensor Output (ASM Traffic Reference 🕮).

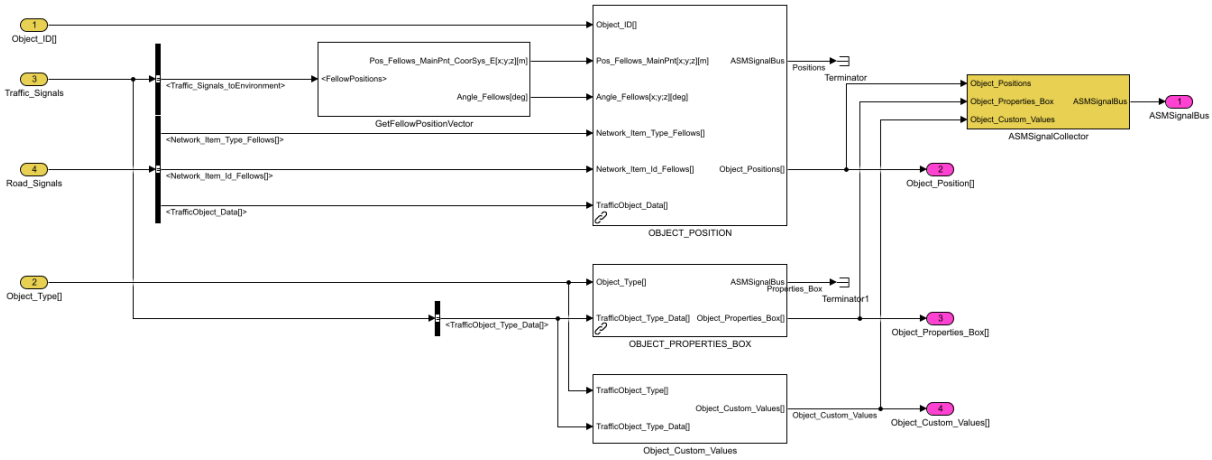

Bounding box data

The ObjectData subsystem also provides bounding box data of detected objects in the earth coordinate system. This supports the visualization of bounding boxes of detected objects in MotionDesk.

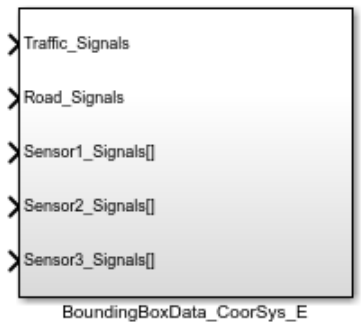

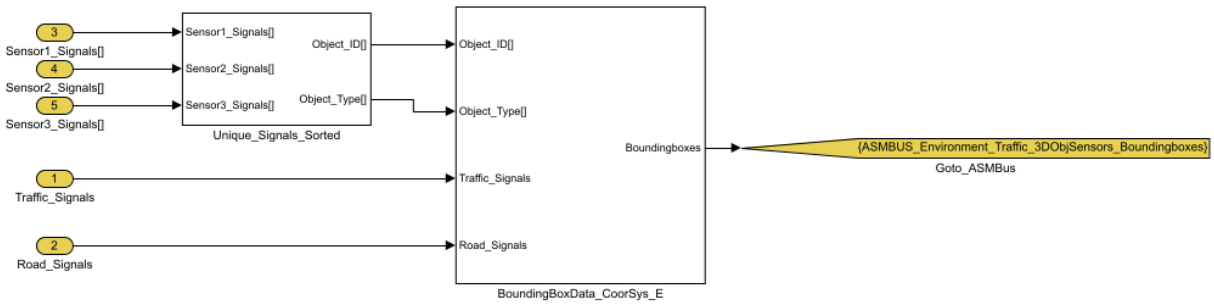

Bounding box data calculation Bounding box data calculation works in the following way:

1. The information of all relevant sensor instances is merged into one vectorized signal. This is done in the Unique_Signals_Sorted block via the DETECTED_OBJECT_MERGE block. Refer to Detected Objects Merge (ASM Traffic Reference 🕮).

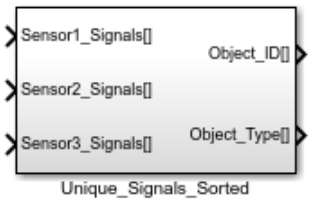

2. Based on the merged sensor output, the bounding box data of the objects in the earth coordinate system is calculated in the BoundingBoxData_CoorSys_E block.

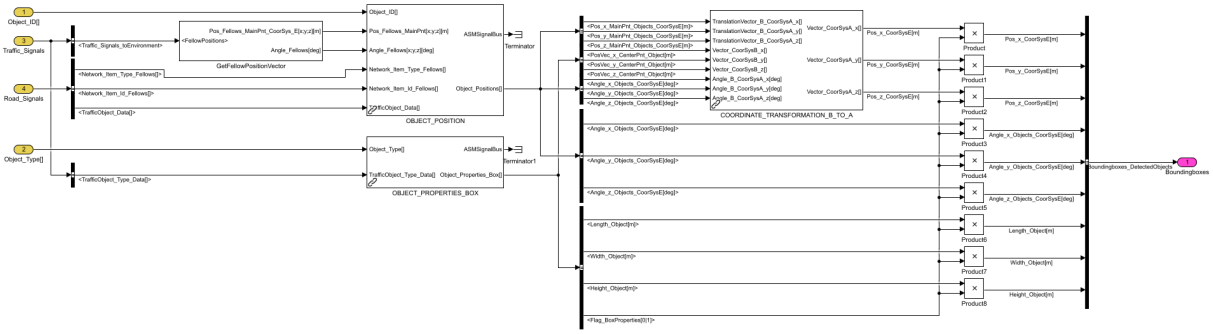

The OBJECT_POSITION and OBJECT_PROPERTIES_BOX blocks calculate basic information regarding the position and size of the detected objects. The COORDINATE_TRANSFORMATION_B_TO_A block transforms the basic information from the objects' coordinate systems to the earth coordinate system.

Refer to Object Position (ASM Traffic Reference 🕮), Object Properties Box (ASM Traffic Reference 🕮) and Coordinate Transformation B to A (ASM User Guide 🕮).

Inports

The following table shows the inports:

Name	Unit	Description
Road_Signals	[]	Signal bus containing road signals.
Traffic_Signals	[]	Signal bus containing traffic signals.

Related topics

References

Coordinate Transformation B to A (ASM User Guide 🕮)
Custom Sensor Output (ASM Traffic Reference 🕮)
Detected Objects Merge (ASM Traffic Reference 🕮)
Object Position (ASM Traffic Reference 🕮)
Object Properties Box (ASM Traffic Reference 🕮)
Sensor Properties (ModelDesk Traffic Object Management 🕮)

Radar Effects Subsystem

Overview

In the ModelDesk Traffic Object Manager, you can define radar reflection points for traffic objects. The OBJECT_SENSOR_3D_CALCULATION block calculates base properties of the radar reflection points for the detected objects in scope. Based on the calculated base properties, the RadarEffects subsystem simulates the effects of radar sensors.

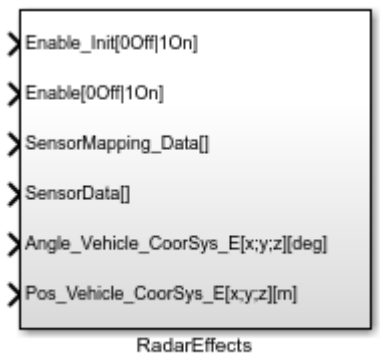

According to the sensor instances of the simulation model, the RadarEffects subsystem is divided into different Sensor subsystems. Each Sensor block processes the radar reflection points that are visible due to the scope geometry of the associated sensor instance.

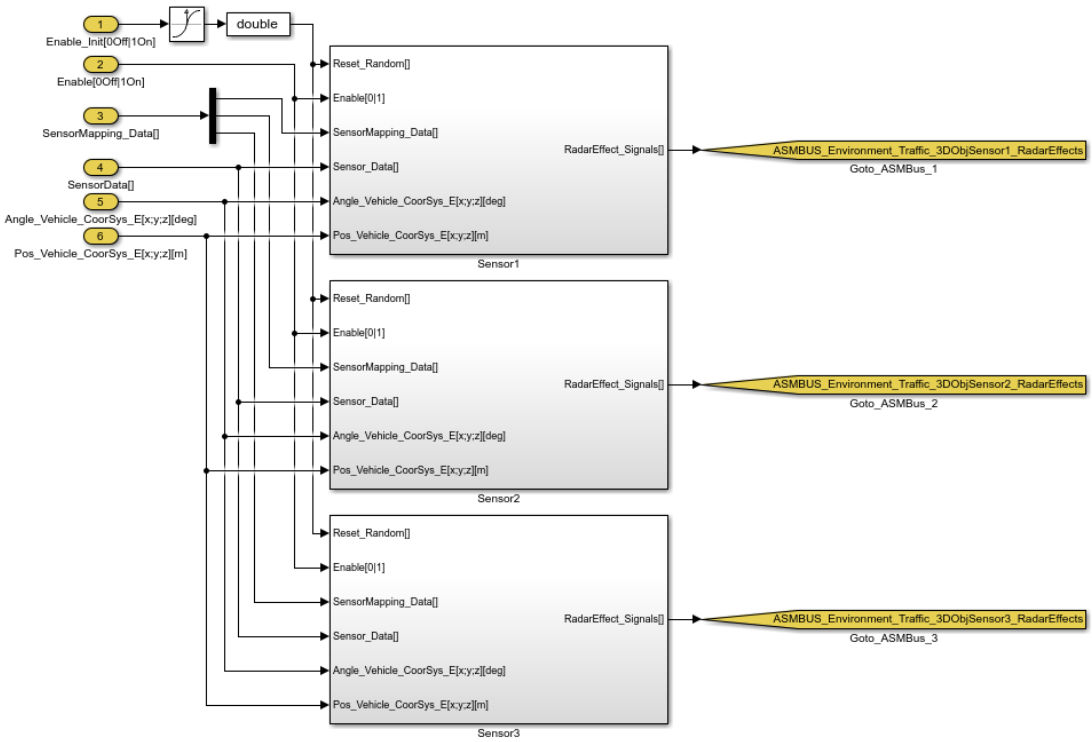

Each Sensor block contains the RadarEffects and RadarEffectsOutput blocks.

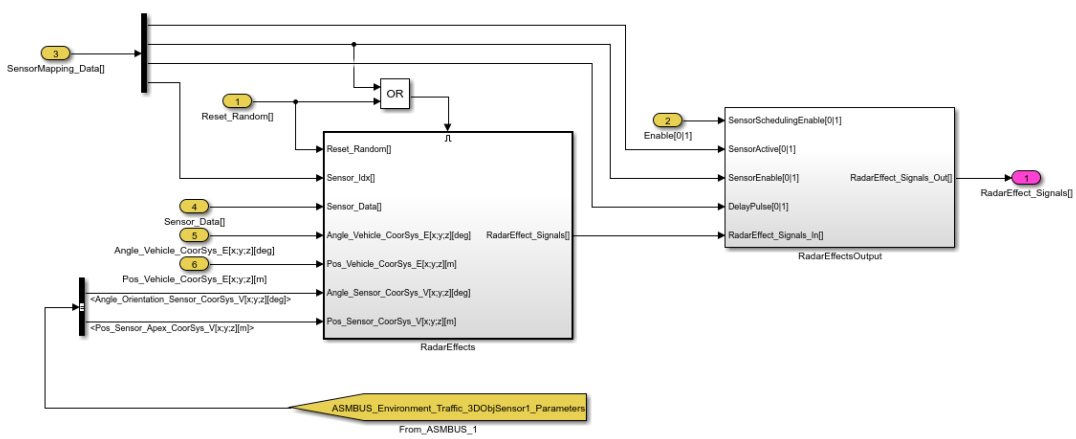

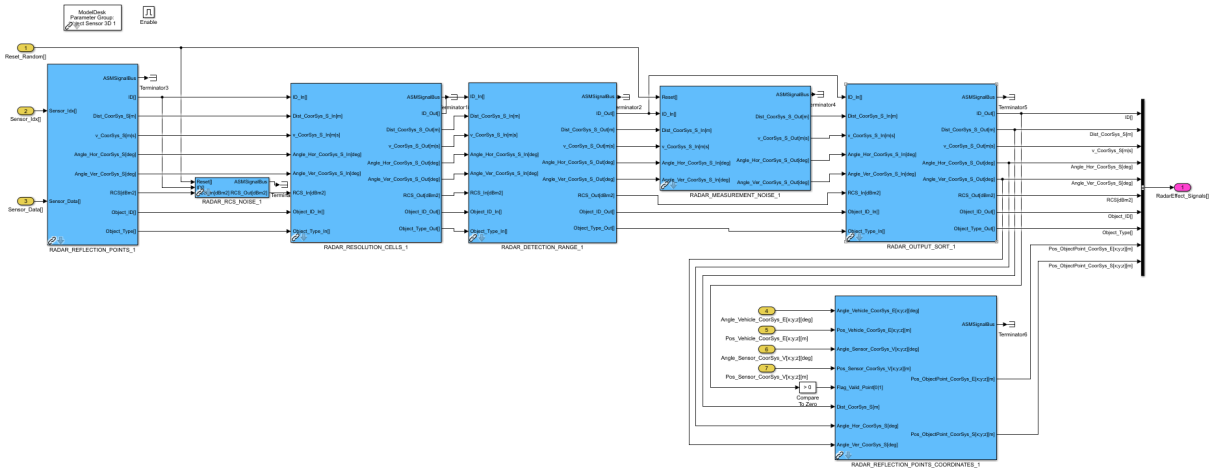

First, the RADAR_REFLECTION_POINTS block provides the base properties of visible radar reflection points of objects in the sensor scope.

Based on this, the following features are available:

- RCS noise: The variable radar cross section of an object, implemented by a statistic approach.
- Resolution cells: The resolution of a radar sensor.
- Limited detection range: The limited radar detection range due to different influences.
- Measurement noise: The measurement noise of a radar sensor.
- Output sort: The sorting of radar output signals by different attributes.
- Reflection point coordinates: The position of radar reflection points in the earth and sensor coordinate systems.

The RadarEffectsOutput block therefore has two tasks:

- Delaying the output of the calculated radar effect signals according to the specified output delay of the associated sensor instance. The output of the radar effects signals and the output of the signals of the sensor instance in the SensorMapping subsystem are therefore synchronous.
- Resetting the radar effect signals if the sensor scheduling is disabled.

Note

Do not modify the RadarEffectsOutput block.

Blocks

The subsystem contains the following blocks:

- Radar Reflection Points (ASM Traffic Reference 🕮)
- Radar Resolution Cells (ASM Traffic Reference 🕮)
- Radar RCS Noise (ASM Traffic Reference 🕮)
- Radar Detection Range (ASM Traffic Reference 🕮)
- Radar Measurement Noise (ASM Traffic Reference 🕮)

- **Radar Output Sort** (ASM Traffic Reference 🕮)
- **Radar Reflection Points Coordinates** (ASM Traffic Reference 🕮)

Inports

The following table shows the inports:

Name	Unit	Description
Angle_Vehicle_CoorSys_E	[x;y;z] [m]	Rotation angles of the ASM vehicle in the earth coordinate system
Enable	[0|1]	Enable flag of the Radar Effects block chain: ▪ 0: Off Calculation of the block chain is switched off. ▪ 1: On Calculation of block system is switched on.
Enable_Init	[0Off|1On]	Flag to enable the start of the sensor initialization: ▪ 0: Start of initialization disabled. ▪ 1: Start of initialization enabled.
Pos_Vehicle_CoorSys_E	[x;y;z] [m]	Position of the ASM vehicle in the earth coordinate system
SensorData	[]	Signal containing a reference to calculated base properties of the radar reflection points **Note** This signal may only be used by the RADAR_REFLECTION_POINTS block. Do not use it with other blocks.
SensorMapping_Data	[]	Signal containing information about the mapping of sensor instances

Related topics

HowTos

How to Specify Points for Object Points Sensors (ModelDesk Traffic Object Management 🕮)

Schedule And Calculate Sensor Subsystem

Description

The ScheduleAndCalculateSensor subsystem implements the sensor scheduler and the detection algorithm. Depending on the particular sensor instances, scheduling parameters of the different sensor instances are calculated.

Blocks

The ScheduleAndCalculateSensor subsystem contains six main blocks:

- Sample Pulse (ASM Traffic Reference 🕮): generates a sample pulse for sampling the vehicle and object signals as the input for the sensor calculation, thus enabling quasi-parallel calculation of multiple sensor instances within one sensor chain.
- SampleAndHold: executes the signal sampling, depending on the sample pulse generated by the SAMPLE_PULSE block.
- Sensor Scheduler (ASM Traffic Reference 🕮): calculates the sensor instance that is to be calculated in the current simulation step. The calculation is based on the combined scheduling parameters of all the sensor instances within the sensor chain. The SENSOR_SCHEDULER block provides information on whether scheduling conflicts exist and which sensor instances are involved.
- Object Sensor 3-D Parameter Vectorization (ASM Traffic Reference 🕮): separates the scheduling from the geometry parameters of the sensor instances.
- Object Sensor 3-D Parameter Selection (ASM Traffic Reference 🕮): selects the sensor parameters of the sensor instance that is to be calculated in the current simulation step.
- Object Sensor 3-D Calculation (ASM Traffic Reference 🕮): contains the sensor algorithms for detecting objects. The block is driven by the scheduler and calculates the configured sensor instances serially.

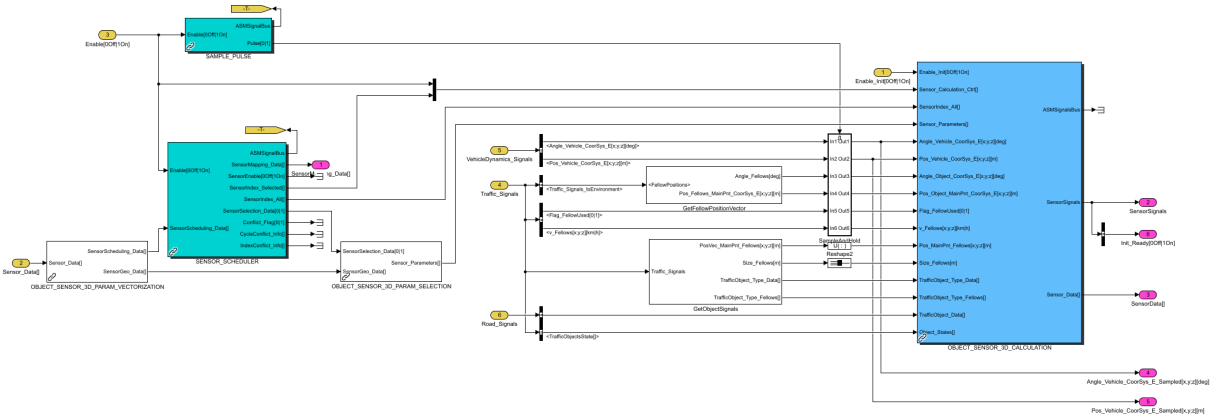

Inports

The following table shows the inports:

Name	Unit	Description
Enable	[0|1]	Enable flag of the sensor chain: ▪ 0: Off ▪ 1: On
Enable_Init	[0|1]	Flag to enable the start of the sensor initialization: ▪ 0: Start of initialization disabled ▪ 1: Start of initialization enabled
Road_Signals	[]	Signal bus containing road signals
Sensor_Data	[]	Vector containing parameters of all sensor instances within sensor chain
Traffic_Signals	[]	Signal bus containing traffic signals
VehicleDynamics_Signals	[]	Signal bus containing vehicle dynamics signals

Outports

The following table shows the outports:

Name	Unit	Description
Angle_Vehicle_CoordSys_E_Sampled	[x;y;z] [deg]	Sampled angles of the vehicle in the earth coordinate system.
Init_Ready	[0|1]	Flag to indicate the end of the initialization process: ▪ 0: Initialization is not finished. ▪ 1: Initialization is finished.
Pos_Vehicle_CoordSys_E_Sampled	[x;y;z] [m]	Sampled position of the vehicle in the earth coordinate system.

Name	Unit	Description
SensorMapping_Data	[]	Signal containing information about the mapping of the sensor instances
SensorSignals	[]	Signal containing results of the sensor calculation for the current sensor instance

Related topics

References

Object Sensor 3-D Subsystem..... 415

Sensor Mapping Subsystem

Description

The SensorMapping subsystem maps the results of the sensor calculation of the current simulation step to the specific sensor chain instances.

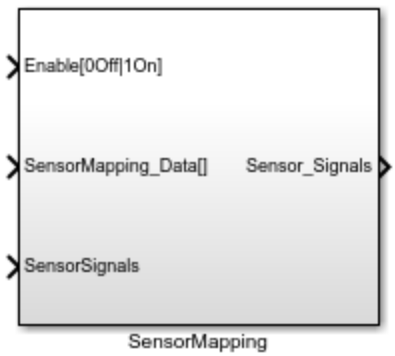

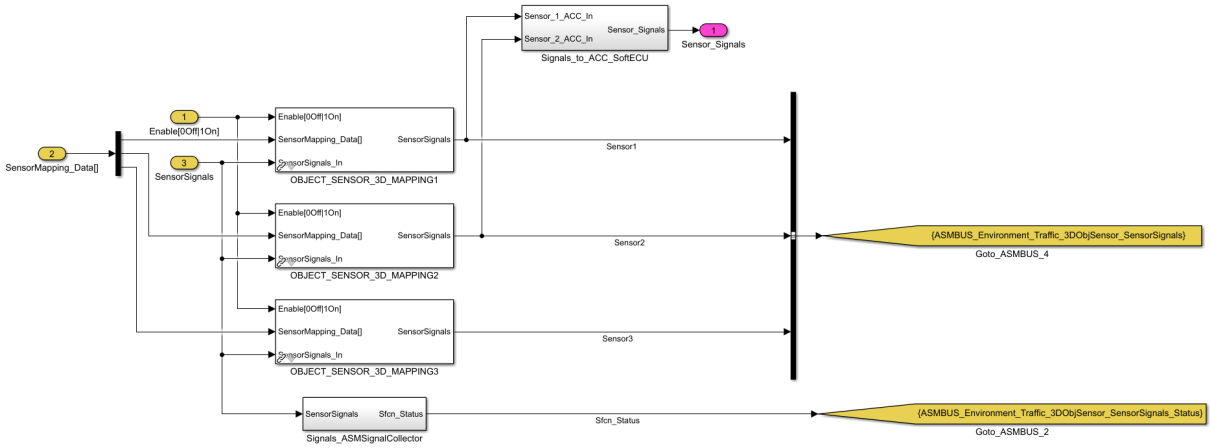

Blocks

The subsystem contains the following blocks:

- One **Object Sensor 3-D Mapping** (ASM Traffic Reference 🕮) block for each sensor instance of the sensor chain. Each mapping block maps the sensor calculation of the current simulation step to the specific sensor instance. Furthermore, the mapping block implements the additional signal delay, which can be set for each sensor instance separately in the parameter blocks.
- A **NearestSurfaceMapping** block which contains the calculated nearest surface signals for each sensor instance of the sensor chain.

Inports

The following table shows the inports:

Name	Unit	Description
Enable	[0|1]	Enable flag of the sensor chain ▪ 0: Off ▪ 1: On
SensorMapping_Data	[]	Signal containing information about the mapping of the sensor instances
SensorSignals	[]	Signal containing results of the sensor calculation for the current sensor instance

Outports

The following table shows the outports:

Name	Unit	Description
Sensor_Signals	[]	Signal bus containing sensor output signals

Related topics

References

Object Sensor 3-D Subsystem..... 415

Sensor Parameters Subsystem

Description

The SensorParameters subsystem contains the parameters (scope zone geometry and scheduling parameters) of the sensor instances within this sensor chain.

The parameters of the different sensor instances are concatenated to one vector, which is connected to the ScheduleAndCalculateSensor subsystem.

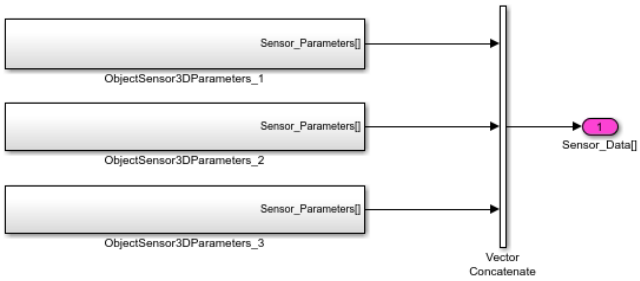

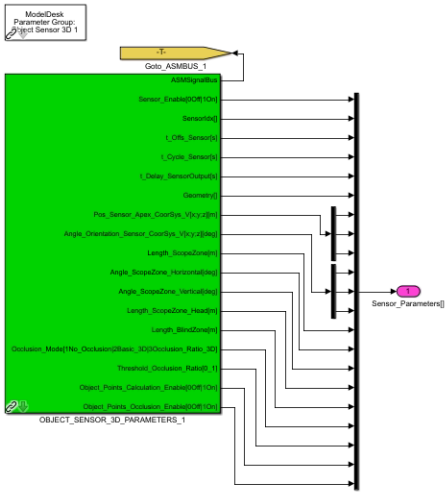

Outports

The following table shows the outports:

Name	Unit	Description
Sensor_Data	[]	Signal containing sensor parameters of all sensor instances within one sensor chain

Related topics

References

Object Sensor 3-D Subsystem..... 415

Traffic Sign Sensor Subsystem

Overview

The Traffic_Sign_Sensor detects static objects of the *traffic sign* type and returns the properties of traffic signs detected within the sensor scope zone.

In the traffic demo model, the sensor is attached to the ASM vehicle, but the sensor can be attached to any other moving body by connecting the position and rotation angles of the moving body in global coordinates to the sensor inputs. The position and rotation of the sensor relative to the vehicle reference frame can be set with the sensor parameters. For enhanced sensor scheduling, you can use the TRAFFIC_SIGN_SENSOR_PARAMETERS block instead of the TRAFFIC_SIGN_SENSOR_GEOMETRY_PARAMETERS block.

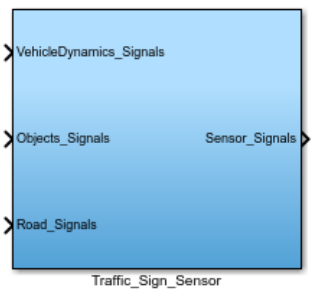

Subsystems and blocks

The subsystem contains two main blocks:

- Traffic Sign Sensor Parameters (ASM Traffic Reference 🕮): defines the sensor parameters and the enable flag for one sensor
- Traffic Sign Sensor Dynamic Calculation (ASM Traffic Reference 🕮): implements the sensor algorithm

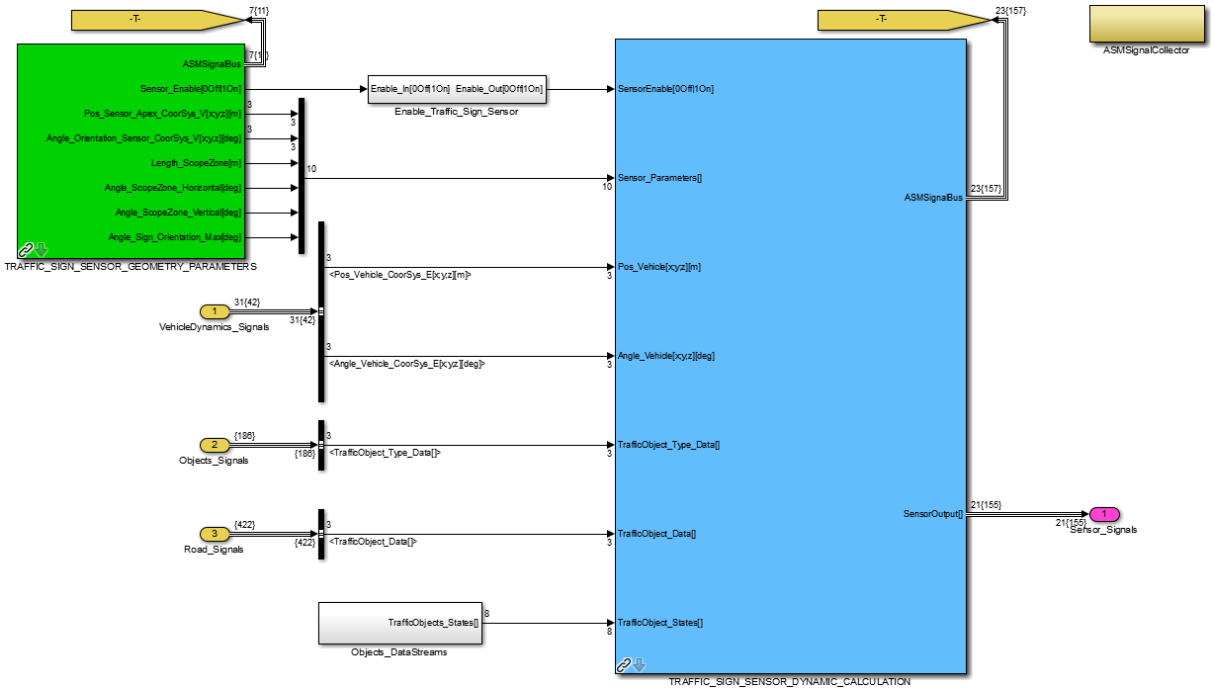

Inports

The following table shows the inports:

Name	Unit	Description
Objects_Signals	[]	Signal bus containing traffic object signals
Road_Signals	[]	Signal bus containing road signals
VehicleDynamics_Signals	[]	Signal bus containing vehicle dynamics signals

Outports

The following table shows the outports:

Name	Unit	Description
Sensor_Signals	[]	Signal bus containing sensor output signals

Groundtruth Submodule

Overview

The GroundTruth submodule contains the following blocks:

- The OSI_GROUNDTRUTH_INTERFACE block collects simulation data regarding the objects and the road, for example, stores it in an internal data structure, and provides a pointer to access the data.

- The **GroundTruth_Data_Access** subsystem contains additional open S-function blocks for exemplary data access.

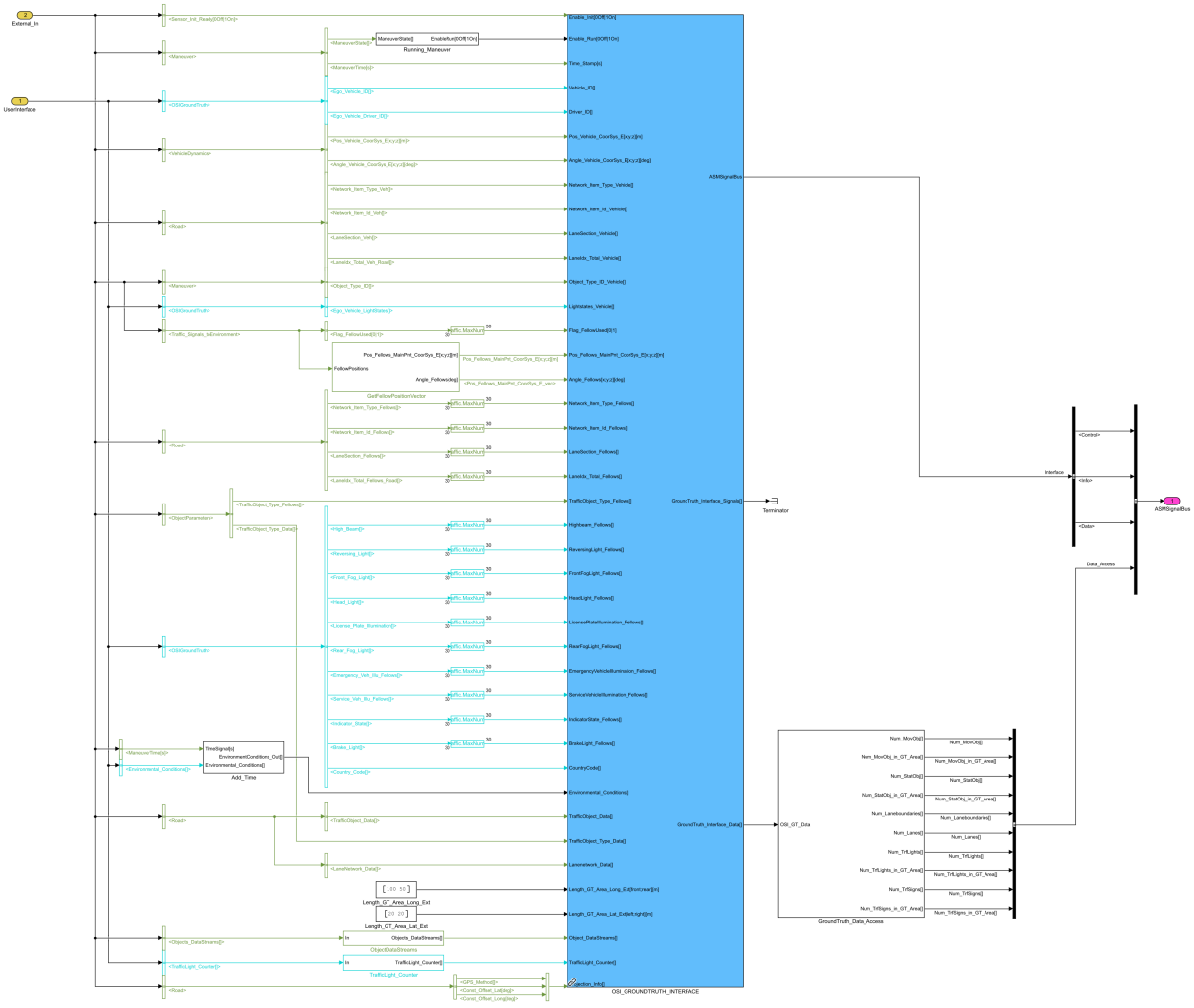

Subsystems of the Vehicle Dynamics Module

Where to go from here

Information in this section

Brake Subsystem.....434
The **Brake** subsystem simulates the transformation from brake pedal to brake torque at each wheel.

Suspension Subsystem.....435
The **Suspension** block calculates the suspension kinematics and the suspension forces in the spring, shock absorber, and the stabilizer.

Front Suspension Subsystem.....437
The **SuspensionFront** subsystem calculates the front suspension kinematics, compliance kinematics, and the suspension forces in the spring, damper, and the stabilizer.

Rear Suspension Subsystem.....438
The **SuspensionRear** subsystem calculates the rear suspension kinematics, compliance kinematics, and the suspension forces in the spring, shock absorber, and the stabilizer.

Vehicle Movement Subsystem.....440
In the **VehicleMovement** block, the motion of the vehicle and the vertical wheel movements are calculated as functions of tires, aerodynamics, suspension, and mass forces and torques.

Brake Subsystem

Description

This block simulates the transformation from brake pedal to brake torque at each wheel.

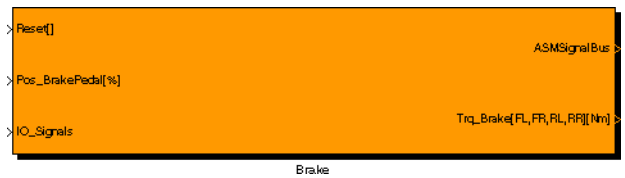

Inports

The following table shows the inports:

Name	Unit	Description
IO_Signals	[]	Signals from ECU to control the brake hydraulic circuit if present
Pos_BrakePedal	[%]	Brake pedal position, defined by the driver
Reset	[]	Resets all integrators in the block to their initial conditions.

Outports

The following table shows the outports:

Name	Unit	Description
Trq_Brake[FL,FR,RL,RR]	[Nm]	Brake torques on the wheels

Blocks

- Brake Hydraulics, refer to ASM Brake Hydraulics Reference 🕮.
- Brake Booster (ASM Vehicle Dynamics Reference 🕮)
- Manifold Pressure (ASM Vehicle Dynamics Reference 🕮)
- Brake Disc (ASM Vehicle Dynamics Reference 🕮)
- Drum Brake (ASM Vehicle Dynamics Reference 🕮)
- Drum Brake 2-D (ASM Vehicle Dynamics Reference 🕮)

Suspension Subsystem

Description

The Suspension block calculates the suspension kinematics and the suspension forces in the spring, shock absorber, and the stabilizer.

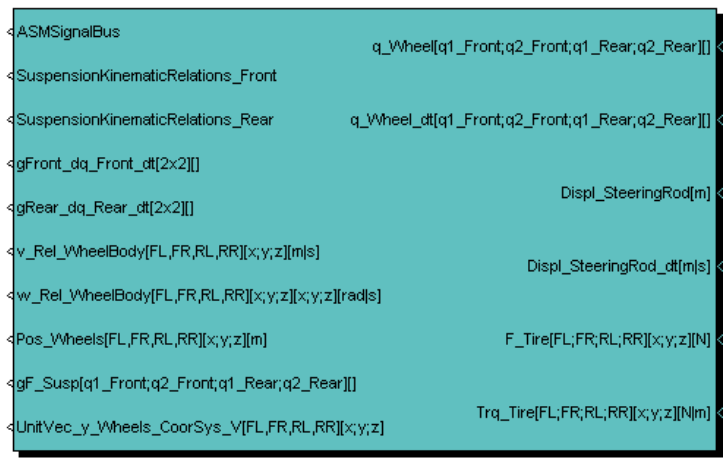

Suspension kinematics means the relative position of the wheel center, the orientation of the wheel and the spring-damper-stabilizer movements of two generalized coordinates (for example, vertical wheel movements of left (q1) and right (q2) sides) and steering rod displacement for both front and rear suspension. The movements of the spring, damper, and stabilizer are calculated to determine the forces that they exert.

The compliance kinematics describe the limited movements of the wheel due to suspension elasticity as a function of the tire forces and torques.

The kinematics are configured via either look-up tables or geometrical linkage points. The compliances are configured via look-up tables. Kinematics and compliance look-up tables are generated by K&C Tester (Kinematics and Compliances Tester) or by a suspension analysis program like ADAMS/Car Suspension Kit. Geometrical linkage points are contained in suspension design data.

The suspension is described in greater detail below. For details on the coordinate systems and the sign conventions, refer to Coordinate Systems (ASM Vehicle Dynamics Addendum 🕮) and Sign Conventions (ASM Vehicle Dynamics Addendum 🕮).

Inports

The following table shows the inports:

Name	Unit	Description
Displ_SteeringRod	[m]	Steering rod displacement
Displ_SteeringRod_dt	[m/s]	Speed of steering rod displacement
F_Tire[FL;FR;RL;RR][x;y;z]	[N]	Tire forces at wheel center, used for the calculation of suspension compliance displacements
q_Wheel[q1_Front;q2_Front;q1_Rear;q2_Rear]	[]	Generalized coordinates for front and rear suspension
q_Wheel_dt[q1_Front;q2_Front;q1_Rear;q2_Rear]	[]	Derivative with respect to time of generalized coordinates for front and rear suspension
Trq_Tire[FL;RF;RL;RR][x;y;z]	[N/m]	Tire torques at wheel center, used for the calculation of suspension compliance displacement

Outports

The following table shows the outports:

Name	Unit	Description
ASMSignalBus	[]	Signal bus that contains signals of ASM components. Refer to ASMSignalBus (ASM User Guide 🕮).
gF_Front_Susp_dq_Front_dt[2x2]	[]	Derivative of generalized forces with respect to generalized speed of front suspension
gF_Rear_Susp_dq_Rear_dt[2x2]	[]	Derivative of generalized forces with respect to generalized speed of rear suspension
gF_Susp[q1_Front;q2_Front;q1_Rear;q2_Rear]	[]	Generalized forces of front and rear suspension
Pos_Wheels[FL,FR,RL,RR][x;y;z]	[m]	Wheel relative position in vehicle coordinate system
SuspensionKinematicRelations_Front	[]	Collection of suspension kinematics derivative signals of front suspension
SuspensionKinematicRelations_Rear	[]	Collection of suspension kinematics derivative signals of rear suspension
UnitVec_y_Wheels_CoorSys_V[FL,FR,RL,RR][x;y;z]	[]	Unit vector in y direction of wheel coordinate system
v_Rel_WheelBody[FL,FR,RL,RR][x;y;z]	[m/s]	Velocity of wheel body relative to vehicle body
w_Rel_WheelBody[FL,FR,RL,RR][x;y;z]	[rad/s]	Angular velocity of wheel body relative to vehicle body, i.e. excluding wheel rotational speed

Blocks

- Rotation Switch (ASM Vehicle Dynamics Reference 🕮)
- Front Suspension Subsystem on page 437
- Rear Suspension Subsystem on page 438
- Subframe (ASM Vehicle Dynamics Reference 🕮)
- Displacement Sensor (ASM Vehicle Dynamics Reference 🕮)

Front Suspension Subsystem

Description

The SuspensionFront subsystem calculates the front suspension kinematics, compliance kinematics, and the suspension forces in the spring, damper, and the stabilizer.

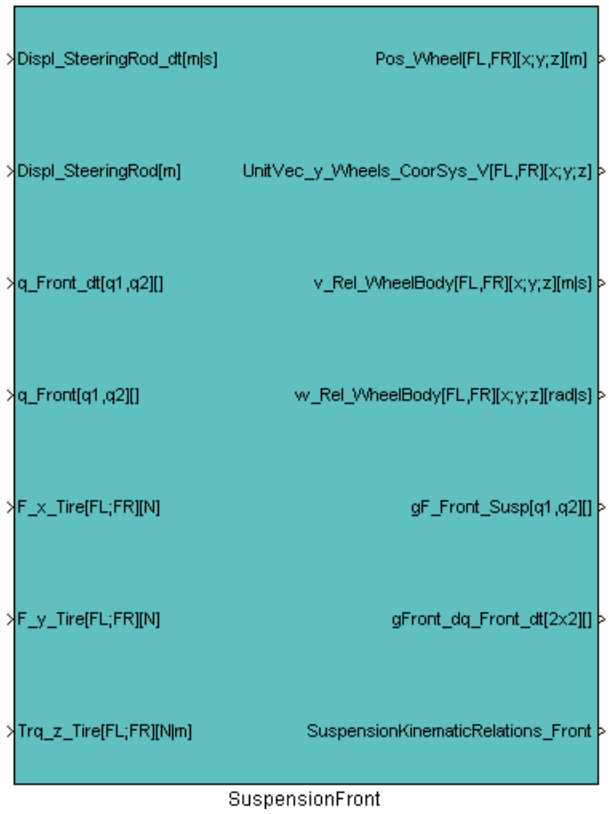

Suspension kinematics is calculated by symmetric or asymmetric look-up table or by geometrical description (MacPherson Strut). Each suspension kinematics system can be replaced in the model with the relevant system at the ASM Vehicle Dynamics Library. For further information on how to replace the suspension kinematics system, refer to How to Change the Suspension Kinematics Model (ASM Vehicle Dynamics Model Description 🕮). The suspension compliances subsystem calculates the elastic displacements and orientations as functions of tire forces and torques.

Blocks

There are five variants to calculate the suspension kinematics of the front suspension: by symmetric or asymmetric look-up tables (as a function of two or three variables) or by geometrical description (MacPherson strut). Each suspension kinematics system calculates wheel midpoint, orientation of wheel and displacements of spring, damper and stabilizer.

- Front Suspension Kinematics (Symmetric) (ASM Vehicle Dynamics Reference 🕮)

- Front Suspension Kinematics (Symmetric, 3DOF) (ASM Vehicle Dynamics Reference 🕮)
- Suspension Kinematics Rigid Axle (Symmetric) (ASM Vehicle Dynamics Reference 🕮)
- Suspension Kinematics Rigid Truck Axle (ASM Vehicle Dynamics Reference 🕮)
- Front Suspension Kinematics (Asymmetric) (ASM Vehicle Dynamics Reference 🕮)
- Front Suspension Kinematics (Asymmetric, 3DOF) (ASM Vehicle Dynamics Reference 🕮)
- Front Suspension Kinematics MacPherson Strut (ASM Vehicle Dynamics Reference 🕮)
- Front Suspension Kinematics Ancillary Spring (ASM Vehicle Dynamics Reference 🕮)
- Front Suspension Compliance (ASM Vehicle Dynamics Reference 🕮)
- Suspension Compliance Rigid Axle (Symmetric) (ASM Vehicle Dynamics Reference 🕮)
- Suspension Compliance 2-D (Symmetric) (ASM Vehicle Dynamics Reference 🕮)
- Stabilizer Compliance (Symmetric) (ASM Vehicle Dynamics Reference 🕮)
- Front Suspension Forces (ASM Vehicle Dynamics Reference 🕮)
- Front Suspension Forces Active (ASM Vehicle Dynamics Reference 🕮)
- Front Suspension Forces Ancillary Spring (ASM Vehicle Dynamics Reference 🕮)
- Suspension Force Kinematics Front (ASM Vehicle Dynamics Reference 🕮)
- Relative Position Front (ASM Vehicle Dynamics Reference 🕮)
- Front Wheels Relative Velocities (ASM Vehicle Dynamics Reference 🕮)

Related topics

HowTos

How to Change the Suspension Kinematics Model (ASM Vehicle Dynamics Model Description 🕮)

Rear Suspension Subsystem

Description

The SuspensionRear subsystem calculates the rear suspension kinematics, compliance kinematics, and the suspension forces in the spring, shock absorber, and the stabilizer.

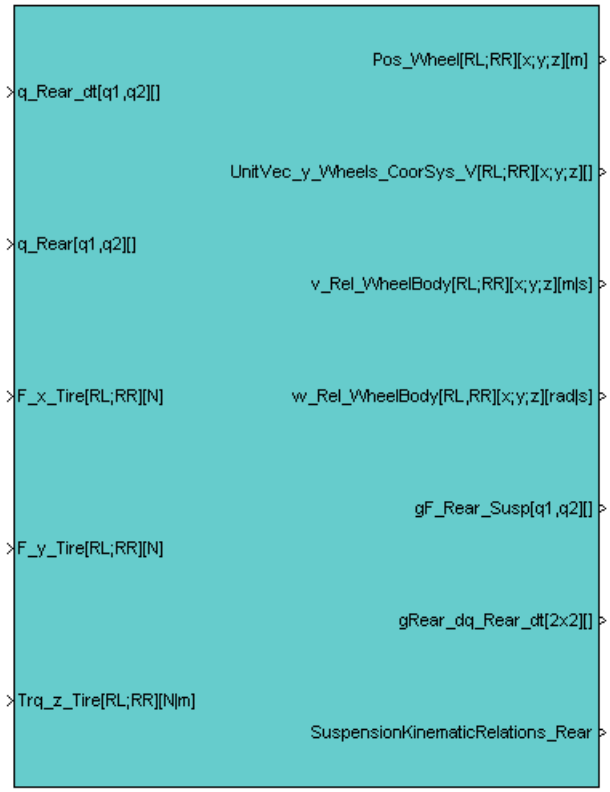

Suspension kinematics is calculated by symmetric or asymmetric look-up table or by geometrical description (semi-trailing arm or rigid axle). Each suspension kinematics system can be replaced at the model with the relevant system at the ASM Vehicle Dynamics Library. For further information on how to replace suspension kinematics system, refer to How to Change the Suspension Kinematics Model (ASM Vehicle Dynamics Model Description 🕮). The suspension compliances subsystem calculates the elastic displacements and orientations as functions of tire forces and torques.

Blocks

There are six variants to calculate the suspension kinematics of the front suspension: by symmetric or asymmetric look-up tables (as functions of two or three variables) or by geometrical description (semi-trailing arm or rigid axle). Each suspension kinematics system calculates wheel midpoint, orientation of wheel and displacements of spring, damper and stabilizer.

- Rear Suspension Kinematics (Symmetric) (ASM Vehicle Dynamics Reference 🕮)
- Rear Suspension Kinematics (Symmetric, 3DOF) (ASM Vehicle Dynamics Reference 🕮)
- Rear Suspension Kinematics (Asymmetric) (ASM Vehicle Dynamics Reference 🕮)
- Rear Suspension Kinematics (Asymmetric, 3DOF) (ASM Vehicle Dynamics Reference 🕮)

- Rear Suspension Kinematics Semi-Trailing Arm (ASM Vehicle Dynamics Reference 🕮)
- Rear Suspension Kinematics Rigid Axle (ASM Vehicle Dynamics Reference 🕮)
- Rear Suspension Kinematics Ancillary Spring (ASM Vehicle Dynamics Reference 🕮)
- Rear Suspension Compliance (ASM Vehicle Dynamics Reference 🕮)
- Rear Suspension Forces (ASM Vehicle Dynamics Reference 🕮)
- Rear Suspension Forces Active (ASM Vehicle Dynamics Reference 🕮)
- Rear Suspension Forces Ancillary Spring (ASM Vehicle Dynamics Reference 🕮)
- Suspension Force Kinematics Rear (ASM Vehicle Dynamics Reference 🕮)
- Relative Position Rear (ASM Vehicle Dynamics Reference 🕮)
- Rear Wheel Relative Velocities (ASM Vehicle Dynamics Reference 🕮)

Vehicle Movement Subsystem

Overview

In the **VehicleMovement** block, the motion of the vehicle and the vertical wheel movements are calculated as functions of tires, aerodynamics, suspension, and mass forces and torques. ASM Vehicle Dynamics uses a multibody system (MBS) technique to write the equation of motion. In this subsystem the equation of motion is solved for the vehicle degrees of freedom. These degrees of freedom are used to calculate the vehicle and wheel velocities and also to calculate the vehicle and wheel positions in the earth reference system. For details of the coordinate systems, refer to Coordinate Systems (ASM Vehicle Dynamics Addendum 🕮).

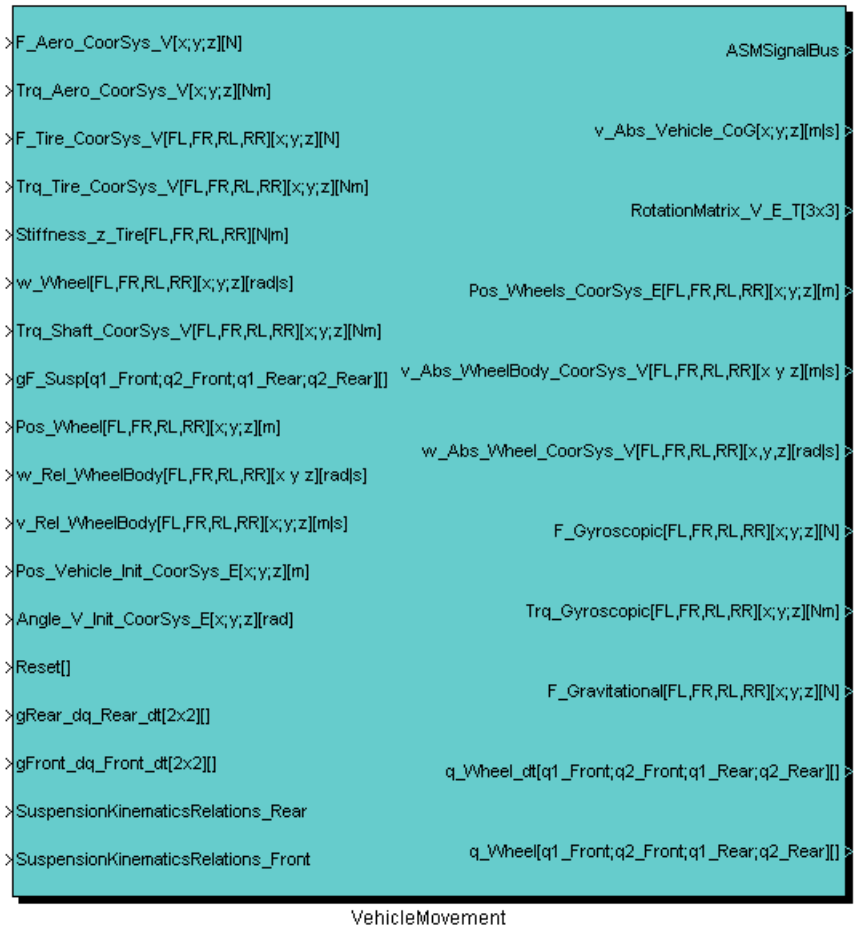

Inports

The following table shows the inports:

Name	Unit	Description
Angle_Vehicle_Init_CoorSys_E[x;y;z]	[rad]	Initial vehicle orientation angles
F_Aero_CoorSys_V[x,y,z]	[N]	Aerodynamic forces represented in vehicle reference coordinate system
F_Susp[FL,FR,RL,RR]	[N]	Forces from suspension system, i.e., spring, damper and stabilizer
F_Tire_CoorSys_V[FL,FR,RL,RR][x;y;z]	[N]	Tire forces vectors represented in vehicle reference coordinate system
gFront_dq_Front_dt[2x2]	[]	Derivatives of the generalized forces with respect to the generalized speeds for front suspension
gRear_dq_Rear_dt[2x2]	[]	Derivatives of the generalized forces with respect to the generalized speeds for rear suspension
Pos_Vehicle_Init_CoorSys_E[x;y;z]	[m]	Initial vehicle position
Pos_Wheel[FL,FR,RL,RR][x;y;z]	[m]	Wheel relative position in vehicle coordinate system

Name	Unit	Description
Reset	[]	Resets all integrators in the block to their initial conditions
Stiffness_z_Tire[FL,FR,RL,RR]	[N/m]	Vertical tire stiffness
SuspensionKinematicRelations_Front	[]	Collection of suspension kinematics derivative signals of front suspension
SuspensionKinematicRelations_Rear	[]	Collection of suspension kinematics derivative signals of rear suspension
Trq_Aero_CoorSys_V[x,y,z]	[Nm]	Aerodynamic torques represented in vehicle reference coordinate system
Trq_Shaft_CoorSys_V[FL,FR,RL,RR][x;y;z]	[Nm]	Driving torque on the wheel in vehicle reference coordinate system
Trq_Tire_CoorSys_V[FL,FR,RL,RR][x;y;z]	[Nm]	Tire forces vectors represented in vehicle reference coordinate system
v_Rel_WheelBody[FL,FR,RL,RR][x,y,z]	[m/s]	Velocity of the wheel body relative to vehicle body
w_Rel_WheelBody[FL,FR,RL,RR][x y z]	[rad/s]	Angular velocity of the wheel body relative to vehicle body, i.e., excluding wheel rotational speed
w_Wheel_CoorSys_V[FL,FR,RL,RR][x;y;z]	[rad]	Wheel rotation speed in vehicle reference coordinate system

Outports

The following table shows the outports:

Name	Unit	Description
F_Gravitational[FL,FR,RL,RR][x,y,z]	[N]	Gravitational forces of the wheel
F_Gyroscopic[FL,FR,RL,RR][x,y,z]	[N]	Gyroscopic forces of the wheel
Pos_Wheels_CoorSys_E[FL,FR,RL,RR][x;y;z]	[m]	Wheel position in the earth coordinate system
q_Wheel[q1_Front;q2_Front;q1_Rear;q2_Rear]	[]	The wheel generalized coordinates
q_Wheel_dt[q1_Front;q2_Front;q1_Rear;q2_Rear]	[]	The wheel generalized speeds
RotationMatrix_V_E_T[3x3]	[]	Rotation matrix from earth to vehicle coordinate system
Trq_Gyroscopic[FL,FR,RL,RR][x,y,z]	[Nm]	Gyroscopic torques of the wheel
v_Abs_Vehicle_CoG[x,y,z]	[m/s]	Absolute velocity of the vehicle center of gravity
v_Abs_WheelBody_CoorSys_V[FL,FR,RL,RR][x y z]	[m/s]	Absolute velocity of the wheel in vehicle coordinate system
w_Abs_Wheel_CoorSys_V[FL,FR,RL,RR][x,y,z]	[rad/s]	Absolute angular velocity of the wheel in vehicle coordinate system

Blocks

- Common Vehicle Parameters (ASM Vehicle Dynamics Reference 🕮)
- Coordinate Transformation (ASM Vehicle Dynamics Reference 🕮)
- Vehicle Motion (ASM Vehicle Dynamics Reference 🕮)
- Vehicle and Wheel Velocities (ASM Vehicle Dynamics Reference 🕮)
- Vehicle Mass and Additional Loads (ASM Vehicle Dynamics Reference 🕮)
- Sensor Motion (ASM Vehicle Dynamics Reference 🕮)
- Mass Forces and Torques (ASM Vehicle Dynamics Reference 🕮)

Blocks from Former Versions

Introduction

The following topics provide information on blocks that were used in former library versions.

Where to go from here

Information in this section

Alternator (Up to Version 5.0)....444
This is a former version of the ALTERNATOR block.

Battery (Up to Version 4.0)....447
This is a former version of the BATTERY model.

Battery (Up to Version 13.0)....452
This is a former version of the BATTERY block.

Battery Multicell (Up to Version 10.0)....460
This is a former version of the BATTERY_MULTICELL block.

Battery Multicell (Up to Version 11.0)....470
This is a former version of the BATTERY_MULTICELL block.

Brake Control (Up to Version 2.0)....481
This is a former version of the BRAKE_CONTROL block.

Brake Control (Up to Version 4.0)....484
This is a former version of the BRAKE_CONTROL block.

Brake Control BEV (Up to Version 2.0)....486
This is a former version of the BRAKE_CONTROL_BEV block.

Starter (Up to Version 5.0)....488
This is a former version of the STARTER block.

Three-Phase DCM Inverter (Up to Version 7.0)....492
This is a former version of THREE_PHASE_DCM_INVERTER block.

Torque Request Coordination BEV (Up to Version 4.0)....497
This is a former version of the TRQ_REQUEST_COORDINATION_BEV block.

Alternator (Up to Version 5.0)

Description

Alternators are used in cars to charge the battery and to power a car's electric system when its engine is running.

The alternator must supply sufficient current to the vehicle's electrical system under all operating conditions to ensure that the state of charge in the energy storage device (battery) is consistently maintained at an adequate level [Bos02].

The rotational speed of the alternator is proportional to the rotational speed of the engine crankshaft. The alternator and engine crankshaft are therefore connected via a transmission.

The following illustration shows the Simulink representation of the alternator.

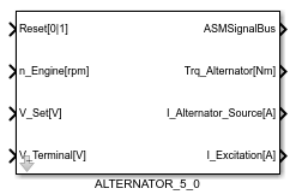

The alternator is modeled as a DC generator with an exciter winding and an armature circuit. The exciter winding generates a magnetic flux which induces a voltage in the armature circuit. The model calculates alternator current according to the terminal voltage and the inner resistance and the inductance of the armature circuit.

A generator reference-arrow system is used for the alternator. The current flowing out of the alternator is positive.

The following illustration shows the equivalent circuit diagram of the model.

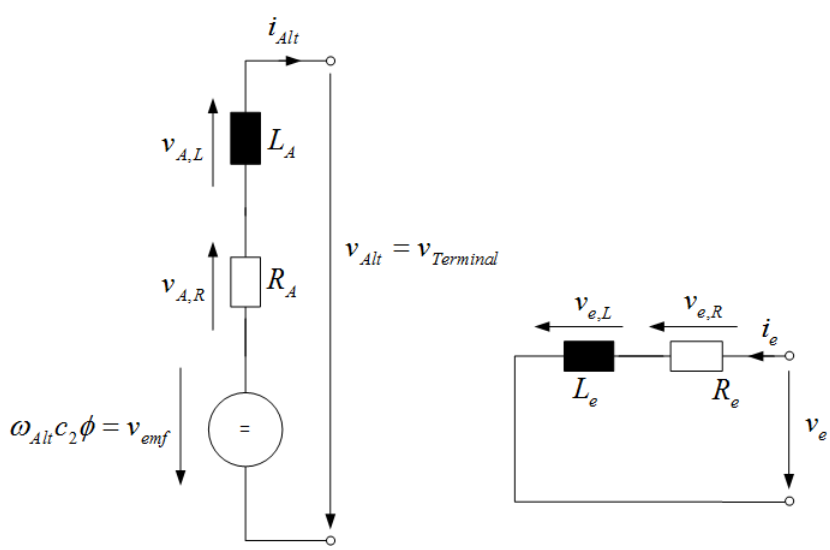

Mode of machine operation:

$v_{\mathrm{emf}} = \omega_{\mathrm{Alt}}\, c_2\, \phi$

$Trq_{\mathrm{Alt}} = i_{\mathrm{Alt}}\, c_2\, \phi$

Alternator:

$$v_{\mathrm{Alt}} = v_{\mathrm{emf}} - R_A\, i_{\mathrm{Alt}} - L_A \frac{di_{\mathrm{Alt}}}{dt}$$

Exciter:

$$v_e = R_e\, i_e + L_e \frac{di_e}{dt}$$

where:

v_{Alt}	is the alternator voltage
i_{Alt}	is the alternator current
$\mathrm{Trq}_{\mathrm{Alt}}$	is the alternator torque
R_A	is the alternator resistance
L_A	is the alternator inductance
c_2	is the machine stator constant
v_e	is the exciter voltage
i_e	is the exciter current
R_e	is the exciter resistance
L_e	is the exciter inductance
c_1	is the machine exciter constant
ω_{Alt}	is the rotational speed
ϕ	is the magnetic flux

To control the alternator voltage or rather the output current, an exciter voltage controller is used. The model provides a PI or a two-point controller.

The next illustration shows the control diagram of the alternator model.

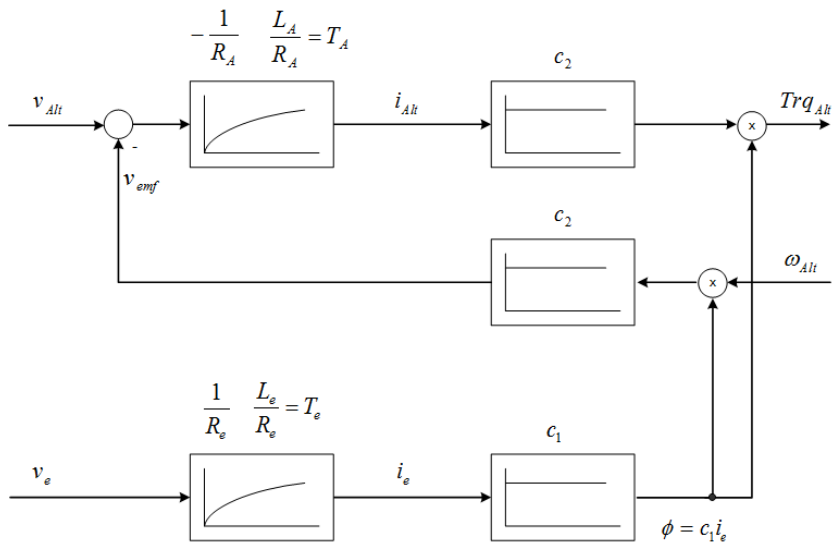

Inports

The following table shows the inports:

Name	Unit	Description
n_Engine	[rpm]	Engine speed
Reset	[0|1]	Reset
V_Set	[V]	Voltage setpoint
V_Terminal	[V]	Terminal voltage

Outports

The following table shows the outports:

Name	Unit	Description
ASMSignalBus	[]	Signal bus that contains signals of ASM components. Refer to ASMSignalBus (ASM User Guide 🕮).
I_Alternator_Source	[A]	Alternator current
I_Excitation	[A]	Excitation current
Trq_Alternator	[Nm]	Alternator torque

Parameter

The following table shows the block parameters:

Name	Unit	Description
Const_I_Max_Exciter	[A]	Maximal exciter current
Const_k_Exciter	[Vs/A]	Machine exciter constant c1
Const_k_Stator	[]	Machine stator constant c2

Name	Unit	Description
Const_Ki	[]	Integral regulation factor
Const_Kp	[]	Proportional regulation factor
Const_L_Armature	[H]	Armature inductance
Const_L_Exciter	[H]	Exciter inductance
Const_PolePairs	[]	Number of pole pairs
Const_R_Armature	[Ω]	Armature resistance
Const_R_Exciter	[Ω]	Exciter resistance
Const_TransmissionRatio	[]	Transmission ratio engine to alternator speed
StepSize	[s]	Simulation step size
Sw_VoltageController	[0|1]	Switch exciter voltage controller ▪ 0: PI controller ▪ 1: Two-point controller

Related topics

References

Alternator (ModelDesk Parameterizing 🕮)
History of the ALTERNATOR Block..... 508

Battery (Up to Version 4.0)

Description

The battery model calculates the terminal voltage, the battery state of charge and the battery temperature as functions of the charge and discharge current.

The next illustration shows the Simulink representation of the battery.

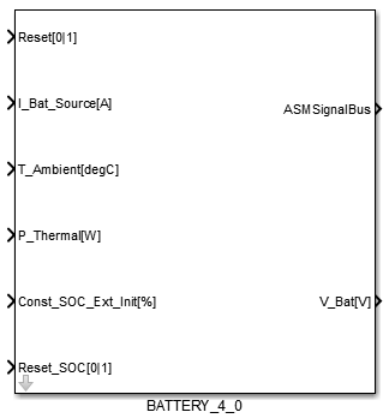

The battery model consists of three submodules [Sie06]:

- Terminal voltage model for calculating the battery terminal voltage
- Thermal model for calculating the battery temperature
- State-of-Charge Model (SOC) for the calculation of battery state of charge

The next three sections describe the different battery submodules:

Terminal voltage model

The terminal voltage model contains different battery effects:

- Voltage of each battery cell according to the state of charge (SOC)
- Inner resistance of the battery
- Inductance of the battery
- Double layer behavior

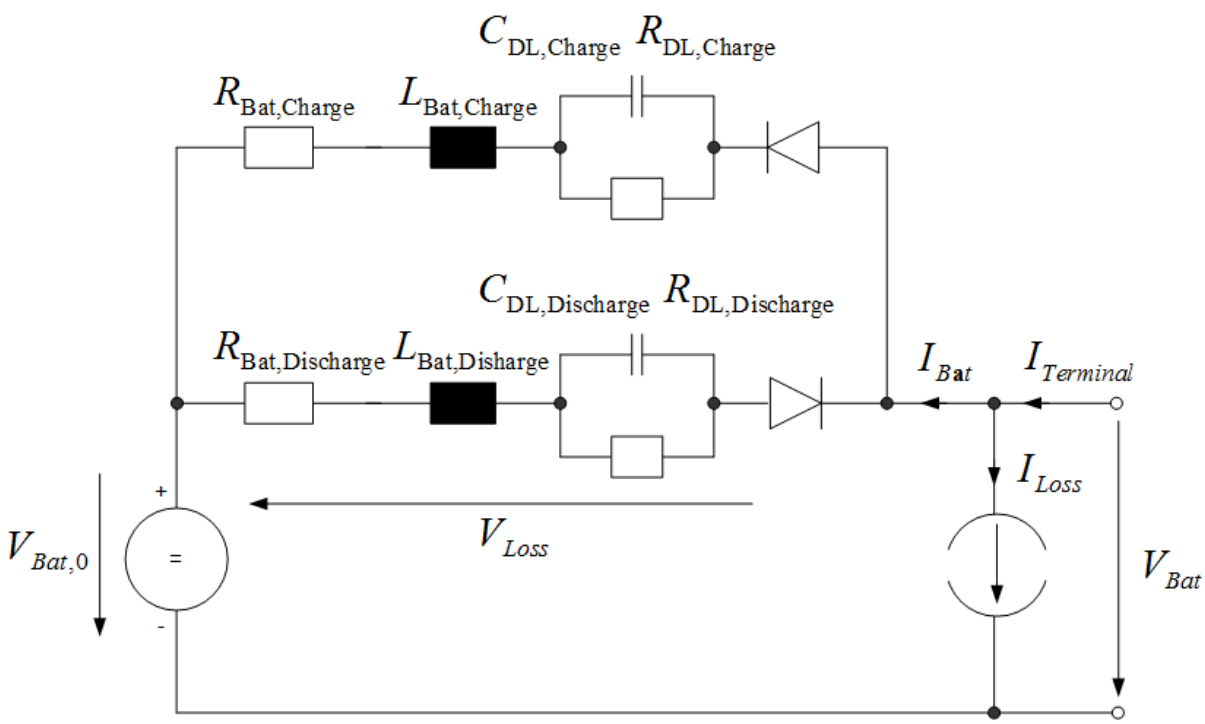

A load reference-arrow system is used for the battery. The charge current is positive and the discharge is negative.

The battery terminal voltage can be calculated with the following equation:

$$V_{Bat} = V_{Bat,0} + V_{Loss}$$

The initial voltage is the sum of the individual cell voltages according to the state of charge:

$$V_{Bat,0} = n_{Cell} V_{Cell}(SOC)$$

With the voltage loss according to the charge and discharge current, the final battery terminal voltage can be calculated:

$$V_{Loss} = \frac{1}{C_{DL}} \int \left(I_{Bat} - \frac{V_{Loss,Capacitor}}{R_{DL}} \right) dt + I_{Bat} R_{Bat}(T_{Bat}) + \frac{dI_{Bat}}{dt} L_{Bat}$$

where:

V_{Bat}	is the battery terminal voltage
$V_{Bat,0}$	is the balanced voltage
V_{Loss}	is the voltage loss
V_{Cell}	is the cell voltage
n_{Cell}	is the number of battery cells
C_{DL}	is the double layer capacity
R_{DL}	is the double layer resistance
R_{Bat}	is the battery resistance
L_{Bat}	is the battery inductance
T_{Bat}	is the battery temperature
I_{Bat}	is the battery current

Thermal model

The thermal battery model is based on a balance of the heat generation and the heat loss power:

$$T_{Bat} = T_{Bat,0} + \frac{1}{C_{Th} m_{Bat}} \int P_W dt$$

The heat generation and the heat loss power take the following effects into account:

$$P_W = P_{Joule} + P_{MainReaction} + P_{LossReaction} - P_{Radiation}$$

Heat generation due to internal losses according to the current and the voltage loss:

$$P_{Joule} = I_{Bat} V_{Loss}$$

Heat generation according to the chemical battery reaction:

$$P_{MainReaction} = c_{MR} I_{Bat}$$

Heat generation according to the loss reaction depending on the gassing behavior:

$P_{LossReaction} = V_{Bat} I_{Loss}$ with the loss current

$$I_{Loss} = I_0 e^{\left(\frac{V_{Bat} - V_N}{K_1} + K_2 \frac{T_{Bat} - T_N}{T_{Bat} T_N} \right)}$$

Heat losses according to the heat flux due to thermal radiation:

$$P_{Radiation} = \varepsilon\, A_{Rad}\, \sigma\left(T_{Bat}^4 - T_{Ambient}^4\right)$$

where:

$T_{Bat,0}$	is the initial battery temperature
c_{Bat}	is the heat capacity, typically 0.5...1 kJ per kg battery mass
m_{Bat}	is the battery mass
P_W	is the heat power
C_{MR}	is the battery constant, for example, 68.4 mV for lead acid, -140 mV for NiCd and -50 mV for NiMH batteries
I_0	is the sum of loss currents at nominal conditions
V_N	is the nominal cell voltage, for example, 2 V for lead acid and 1.2 V for NiCd and NiMH batteries
T_N	is the nominal temperature, by definition 300 K
T_{Bat}	is the cell temperature
$T_{Ambient}$	is the ambient temperature
K_1	is the constant that shows dependence on clamp voltage, for example, 90 mV, for lead acid closed
K_2	is the constant that shows dependence on temperature, for example, 6000 K
A_{Bat}	is the radiating surface
σ	is the Stefan-Boltzmann constant, 5.67 * 10^{-8} W/(m^2K^4)
ε	is the emission ratio, for example, 0.7 … 0.9 for usual housing materials

State of charge model

The state of charge is calculated according to the following currents:

- Loss current from the thermal model I_{Loss}
- Battery current charge or discharge current

$I_{Bat} - I_{Loss} > 0$: Alternator charges the battery

$I_{Bat} - I_{Loss} < 0$: Load current discharges the battery

$$SOC = SOC_0 + \frac{1}{C_N(T) \cdot SOH} \int \left(I_{Terminal} - I_{Loss}\right) dt$$

where:

SOC	is the state of charge
SOC_0	is the initial state of charge
K_N	is the nominal capacity of battery
$I_{Terminal}$	is the terminal current
I_{Loss}	is the loss current

Inports

The following table shows the inports:

Name	Unit	Description
Const_SOC_Ext_Init	[%]	Initial state of charge, usage is selected via block parameter Sw_SOC_Init

Name	Unit	Description
I_Bat_Source	[A]	Current
P_Thermal	[W]	External thermal power, negative value for cooling, positive value for heating
Reset	[0|1]	Reset
Reset_SOC	[]	Reset state of charge to initial value
T_Ambient	[°C]	Ambient temperature

Outports

The following table shows the outports:

Name	Unit	Description
ASMSignalBus	[]	Signal bus that contains signals of ASM components. Refer to ASMSignalBus (ASM User Guide 🕮).
V_Bat	[V]	Battery voltage

Parameter

The following table shows the block parameters:

Name	Unit	Description
Const_A_Surface	[m^2]	Relevant surface for thermal emission
Const_c_MainReaction	[]	Thermal coefficient by main chemical reaction
Const_Capacity_nom	[Ah]	Nominal block capacity
Const_Capacity_Thermal	[J/kg K]	Thermal capacity
Const_Cd_Charge	[F]	Double layer capacitance charging
Const_Cd_Discharge	[F]	Double layer capacitance discharging
Const_Factor_ThermalEmission	[]	Integral thermal emission factor
Const_I_Loss_nom	[A]	Overall loss current at nominal temperature and voltage
Const_K1	[V]	Differential voltage loss coefficient K1
Const_K2	[K]	Differential thermal loss coefficient K2
Const_L_Charge	[H]	Battery inductance charging
Const_L_Discharge	[H]	Battery inductance discharging
Const_m_Batt	[kg]	Battery mass
Const_n_Cells	[]	Number of cells
Const_Rd_Charge	[Ω]	Double layer resistance charging
Const_Rd_Discharge	[Ω]	Double layer resistance discharging
Const_SOC_Init	[%]	Initial state of charge
Const_Temp_nom	[K]	Base temperature for nominal values
Const_V_Cell_nom	[V]	Nominal cell voltage
Map_Factor_Capacity	[]	Battery capacity factor = f(temperature[K], current[A])
Map_Factor_CellVoltage	[]	Cell voltage factor = f(state of charge[%])
Map_R_Charge	[Ω]	Battery charging resistance = f(temperature[K])

Name	Unit	Description
Map_R_Discharge	[Ω]	Battery discharging resistance = f(temperature[K])
StepSize	[s]	Model step size
Sw_SOC_Init	[]	Switch to define which initial SOC value is used ▪ 0: Internal value defined by block parameter ▪ 1: External value via block inport

Related topics

References

Battery (Version 4.0) (ModelDesk Parameterizing 🕮)

Battery (Up to Version 13.0)

Description

The BATTERY_13_0 model calculates the terminal voltage, the battery state of charge and the battery temperature as functions of the charge and discharge current.

The following illustration shows the Simulink representation of the battery.

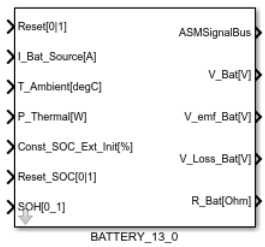

The battery model consists of three submodules [Sie06]:

- Terminal voltage model for calculating the battery terminal voltage
- Thermal model for calculating the battery temperature
- State-of-Charge Model (SOC) for the calculation of battery state of charge

The next three sections describe the different battery submodules:

Terminal voltage model

The terminal voltage model contains different battery effects:

- Voltage of each battery cell according to the state of charge (SOC)
- Inner resistance of the battery
- Inductance of the battery
- Double layer behavior
- Diffusion behavior

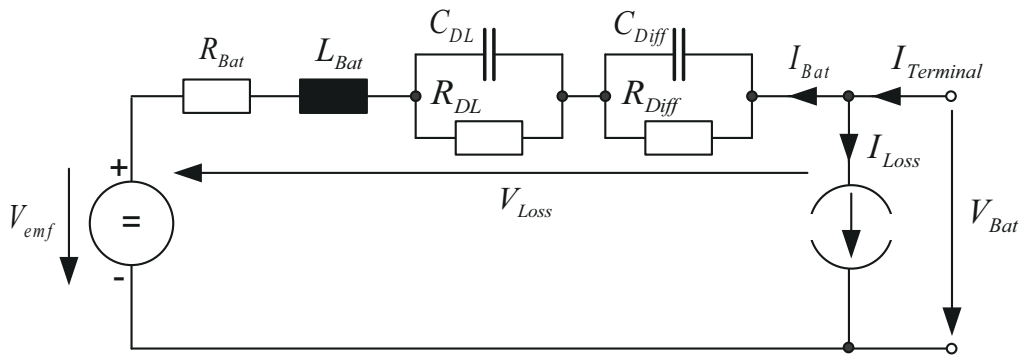

A load reference-arrow system is used for the battery. The charge current is positive and the discharge is negative.

The battery terminal voltage can be calculated with the following equation:

$$V_{Bat} = V_{emf} - V_{Loss}$$

The initial voltage is the sum of the individual cell voltages according to the state of charge:

$$V_{emf} = n_{Cell} V_{Cell}(SOC)$$

With the voltage loss according to the charge and discharge current, the final battery terminal voltage can be calculated:

$$V_{Loss} = \frac{1}{C_{DL}} \int \left(I_{Bat} - \frac{V_{C\,DL}}{R_{DL}} \right) dt + \frac{1}{C_{Diff}} \int \left(I_{Bat} - \frac{V_{C\,Diff}}{R_{Diff}} \right) dt + I_{Bat} R_{Bat}(SOC, I_{Bat}, T_{Bat}, SOH) + \frac{dI_{Bat}}{dt} L_{Bat}$$

where:

V_{Bat}	is the battery terminal voltage
V_{emf}	is the electromotive force voltage (balanced voltage)
V_{Loss}	is the voltage loss
V_{Cell}	is the cell voltage
$V_{C\,DL}$	is the voltage loss double layer capacitance
$V_{C\,Diff}$	is the voltage loss diffusion capacitance
n_{Cell}	is the number of battery cells
C_{DL}	is the double layer capacity
R_{DL}	is the double layer resistance
C_{Diff}	is the diffusion capacitance
R_{Diff}	is the diffusion resistance
R_{Bat}	is the battery resistance
L_{Bat}	is the battery inductance
T_{Bat}	is the battery temperature
I_{Bat}	is the battery current
SOC	is the state of charge

Thermal model

The thermal battery model is based on a balance of the heat generation and the heat loss power:

$$T_{Bat} = T_{Bat,0} + \frac{1}{C_{Th} m_{Bat}} \int P_W dt$$

The heat generation and the heat loss power take the following effects into account:

$$P_W = P_{Joule} + P_{MainReaction} + P_{LossReaction} - P_{Radiation}$$

Heat generation due to internal losses according to the current and the voltage loss:

$$P_{Joule} = I_{Bat} V_{Loss}$$

Heat generation according to the chemical battery reaction:

$$P_{MainReaction} = c_{MR} I_{Bat}$$

Heat generation according to the loss reaction depending on the gassing behavior:

$$P_{LossReaction} = V_{Bat} I_{Loss}$$

with the loss current

$$I_{Loss} = I_0 e^{\left(\frac{V_{Bat} - V_N}{K_1} + K_2 \frac{T_{Bat} - T_N}{T_{Bat} T_N}\right)}$$

Heat losses according to the heat flux due to thermal radiation:

$$P_{Radiation} = \varepsilon\, A_{Rad}\, \sigma\left(T_{Bat}^4 - T_{Ambient}^4\right)$$

where:

$T_{Bat,0}$	is the initial battery temperature
C_{Th}	is the thermal capacity, typically 800 J/(Kg K) for valve regulated lead acid, 750 J/(Kg K) for NiMH, and 700 J/(Kg K) for Li-Ion batteries.
m_{Bat}	is the battery mass
P_W	is the heat power
c_{MR}	is the integral thermal emission factor, for example, 68.4 mV for lead acid, -140 mV for NiCd, -50 mV for NiMH and 30 mV for Li-Ion batteries
I_0	is the sum of loss currents at nominal conditions
V_N	is the nominal cell voltage, for example, 2 V for lead acid, 1.2 V for NiCd and NiMH and 3.2 ... 4.0 V for Li-Ion batteries
T_N	is the nominal temperature, by definition 300 K
T_{Bat}	is the cell temperature
$T_{Ambient}$	is the ambient temperature
K_1	is the constant that shows dependence on clamp voltage, for example, 90 mV for lead acid closed
K_2	is the constant that shows dependence on temperature, for example, 6000 K
A_{Rad}	is the radiating surface
σ	is the Stefan-Boltzmann constant, 5.67 * 10^{-8} W/(m^2K^4)
ε	is the emission ratio, for example, 0.7 … 0.9 for usual housing materials

State of charge model

The state of charge is calculated according to the following currents:

- Loss current from the thermal model I_{Loss}
- Battery current charge or discharge current

I_{Bat} - I_{Loss} > 0: Alternator charges the battery

I_{Bat} - I_{Loss} < 0: Load current discharges the battery

$$SOC = SOC_0 + \frac{1}{C_N(T) \cdot SOH} \int (I_{Terminal} - I_{Loss})dt$$

where:

SOC	is the state of charge
SOC_0	is the initial state of charge
C_N	is the nominal capacity of battery
$I_{Terminal}$	is the terminal current
I_{Loss}	is the loss current

Inports

The following table shows the inports:

Name	Unit	Description
Const_SOC_Ext_Init	[%]	Initial state of charge, usage is selected via block parameter Sw_SOC_Init
I_Bat_Source	[A]	Current
P_Thermal	[W]	External thermal power, negative value for cooling, positive value for heating
Reset	[0|1]	Reset
Reset_SOC	[]	Reset state of charge to initial value
SOH	[1_0]	State of health
T_Ambient	[°C]	Ambient temperature

Outports

The following table shows the outports:

Name	Unit	Description
ASMSignalBus	[]	Signal bus that contains signals of ASM components. Refer to ASMSignalBus (ASM User Guide 🕮).
R_Bat	[Ω]	Internal resistance
V_Bat	[V]	Battery voltage
V_emf_bat	[V]	Electromotive force voltage
V_Loss_Bat	[V]	Voltage loss

Parameter

The following table shows the block parameters:

Name	Unit	Description
Const_A_Surface	[m^2]	Relevant surface A_{Rad} for thermal emission
Const_Capacity_nom	[Ah]	Nominal block capacity C_N
Const_Capacity_Thermal	[J/kg K]	Thermal capacity C_{Th}
Const_C_diff_Charge	[F]	Diffusion capacitance charging C_{Diff} of one cell
Const_C_diff_Discharge	[F]	Diffusion capacitance discharging C_{Diff} of one cell
Const_Cd_Charge	[F]	Double layer capacitance charging C_{DL} of one cell
Const_Cd_Discharge	[F]	Double layer capacitance discharging C_{DL}
Const_Factor_ThermalEmission	[]	Integral thermal emission factor ε, for example, 0.7…0.9 for usual housing materials
Const_I_Loss_nom	[A]	Sum of loss currents I_0 at nominal temperature and voltage
Const_K1	[V]	Differential voltage loss coefficient K1
Const_K2	[K]	Differential thermal loss coefficient K2
Const_L_Charge	[H]	Battery inductance charging L_{Bat} of one cell
Const_L_Discharge	[H]	Battery inductance discharging L_{Bat}

Name	Unit	Description
Const_m_Batt	[kg]	Battery mass m_{Bat}
Const_n_Cells	[]	Number of cells n_{Cell}
Const_R_diff_Charge	[Ω]	Diffusion resistance charging R_{Diff} of one cell
Const_R_diff_Discharge	[Ω]	Diffusion resistance discharging R_{Diff} of one cell
Const_Rd_Charge	[Ω]	Double layer resistance charging R_{DL} of one cell
Const_Rd_Discharge	[Ω]	Double layer resistance discharging R_{DL}
Const_SOC_Init	[%]	Initial state of charge SOC_0
Const_Temp_nom	[K]	Base temperature T_N for nominal values
Const_V_Cell_nom	[V]	Nominal cell voltage V_N, for example, 2 V for lead acid, 1.2 V for NiCd and NiMH and 3.2 ... 4.0 V for Li-Ion batteries
Const_c_MainReaction	[]	Thermal coefficient (battery constant C_{MR}) by main chemical reaction, for example, 68.4 mV for lead acid, -140 mV for NiCd, -50 mV for NiMH and 30 mV for Li-Ion batteries
Map_Factor_Capacity	[]	Battery capacity factor = f(temperature[K])
Map_Factor_CellVoltage	[]	Cell voltage factor = f(state of charge[%]) This factor multiplied with the nominal cell voltage supply the resulting cell voltage.
Map_R_Charge	[Ω]	Battery charging resistance R_{Bat} of one cell = f(SOC [%], current [A])
Map_R_Discharge	[Ω]	Battery discharging resistance R_{Bat} of one cell = f(SOC [%], current [A])
Map_R_Factor_Charge	[0_1]	Battery resistance factor charging = f(temperature[K])
Map_R_Factor_Discharge	[0_1]	Battery resistance factor discharging = f(temperature[K])
Map_R_Factor_SOH_Charging	[0_1]	Battery resistance factor charging=f(SOH[0_1])
Map_R_Factor_SOH_Discharging	[0_1]	Battery resistance factor discharging=f(SOH[0_1])
StepSize	[s]	Simulation step size
Sw_Diffusion	[]	Switch for diffusion simulation: ▪ 0: Disable ▪ 1: Enable
Sw_DoubleLayer	[]	Switch for double layer simulation: ▪ 0: Disable ▪ 1: Enable
Sw_I_Loss	[]	Switch for loss current simulation: ▪ 0: Disable ▪ 1: Enable
Sw_Inductance	[]	Switch for inductance simulation: ▪ 0: Disable ▪ 1: Enable
Sw_SOC_Init	[]	Switch to define which initial SOC value is used ▪ 0: Internal value defined by block parameter ▪ 1: External value via block inport

Processing information

You have to parameterize the parameter values for the different resistances, the inductance, and capacitances for one battery cell. If these values are only available for the complete battery pack, you have to calculate the cell values. To do this, you can divide the battery pack resistance and inductance values by the number of cells. For the dynamic diffusion and double layer behavior, do not change the time constant of the RC parallel circuit. To achieve this, you have to multiply the capacitance values with the **Number of cell** parameter.

For a basic battery parameterization, the important parameters are the battery capacitance and the cell voltage that depend on the SOC. For the internal resistance, you can use a constant value without SOC, temperature, and current dependence. You can neglect the inductance for Li-ion batteries. Therefore, you can use the switch for inductance simulation to disable the induction simulation.

The model simulates the dynamic voltage drop behavior, such as the double layer and diffusion effects with two RC circuits. For a basic parametrization, you can disable these effects with the switch of the double layer and diffusion behavior.

For a simple dynamic voltage drop simulation, you can use only one RC circuit and disable the other via the switch. You can identify the time constant τ of the used RC circuit, and therefore the parameters for the resistance and capacitance, via a battery voltage measurement. For this measurement, you apply a current pulse to the battery and evaluate the battery voltage response. You can determine the time constant, and therefore the value of the resistance and capacitance, as shown in the following graphic:

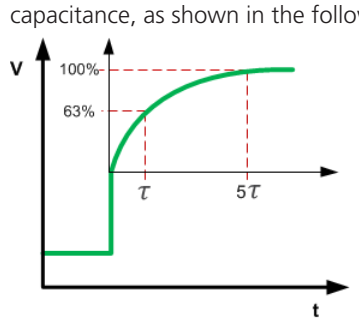

Where: $\tau = R \cdot C$

If the model simulates a detailed dynamic voltage drop with double layer (low time constant) and diffusion behavior (higher time constant), you can use an electro-chemical impedance spectroscopy (EIS) measurement to parameterize the model. The measurement points the complex impedance of the battery in the frequency response locus (Nyquist Plot). The following equation displays the complex impedance of the battery:

$$\underline{Z} = Re\{\underline{Z}\} + j\, Im\{\underline{Z}\} = |\underline{Z}|e^{j\,\varphi(\underline{Z})}$$

To find the resistance and capacitance values of the two RC circuits, you can use an optimization routine that verifies the RC values to get an match between simulation result and measurement. The following graphic shows an example of an EIS measurement:

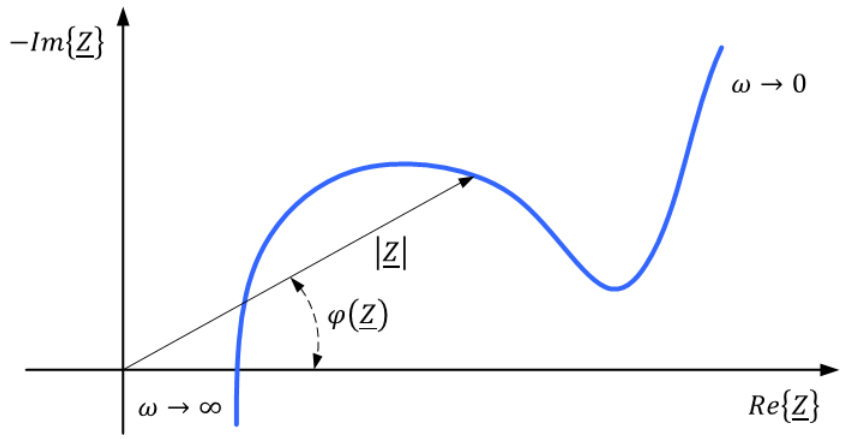

The following example parameterizations for different battery types are available:

- Lead-acid battery
- Nickel-metal hydride battery
- Lithium-ion battery

Lead-acid battery

- LeadAcid_AGM_89Ah: This absorbed glass (AGM) battery is a class of a valve-regulated lead-acid (VRLA) battery with a capacity of 89 Ah and an open-circuit voltage of 2.0 V. This technology represents a low-maintenance rechargeable battery with high power density and low internal resistance.

Nickel-metal hydride battery

- NiMH_0p8Ah: This parameterization represents a rechargeable nickel-metal hydride (NiMH) consumer battery with a capacity of 800 mAh and an open-circuit voltage of 1.2 V.
- NiMH_6p5Ah: This parameterization represents a rechargeable nickel-metal hydride (NiMH) battery with a capacity of 6.5 Ah and an open-circuit voltage of 1.2 V. This type of battery is often used in hybrid vehicle applications.

Lithium-ion battery

- LiIon_NMC_Polimer_HE_53Ah: This parameterization represents a high energy lithium-ion NMC polymer battery. The battery cell is based on lithium nickel manganese cobalt (NMC) cathodes and a graphite-based anode. It has a capacity of 53 Ah and an open-circuit voltage of 3.7 V. This type of battery is often used in hybrid and pure electric vehicle applications.
- LiIon_NMC_Polimer_HP_5Ah: This parameterization represents a high power lithium-ion NMC polymer battery. The battery cell is based on lithium nickel manganese cobalt (NMC) cathodes and a graphite-based anode. It has a capacity of 5 Ah and an open-circuit voltage of 3.65 V.
- LiIon_LFP_15Ah: This parameterization represents a lithium-iron-phosphate (LFP) battery cell with a capacity of 15 Ah and an open-circuit voltage of 3.3 V.
- LiIon_LTO_1Ah: This parameterization represents a lithium-titanate (LTO) battery with a capacity of 1 Ah and an open-circuit voltage of 2.52 V. This type of lithium-ion battery has an excellent life cycle and great safety characteristics but a lower specific energy and voltage than conventional lithium-ion batteries. LTO batteries are used in automotive electric applications.

Related topics

References

Battery V13 (ModelDesk Parameterizing 🕮)

Battery Multicell (Up to Version 10.0)

Description

The BATTERY_MULTICELL_10_0 model calculates the terminal voltage, the battery state of charge and the battery temperature of each cell as functions of the charge and discharge current.

The following illustration shows the Simulink representation of the battery multicell.

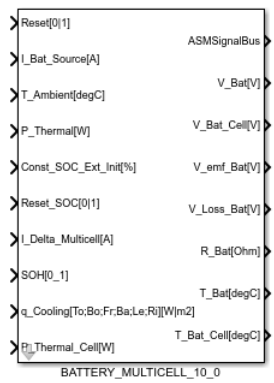

The battery multicell model consists of three submodules [Sie06]:

- Terminal voltage model for calculating the battery terminal voltage
- Thermal model for calculating the battery temperature of each separate cell
- State-of-Charge Model (SOC) for the calculation of battery state of charge

The next three sections describe the different battery submodules:

Terminal voltage model

The terminal voltage model contains different battery effects:

- Voltage of each battery cell according to the state of charge (SOC)
- Inner resistance of the battery
- Inductance of the battery
- Double layer behavior
- Diffusion behavior

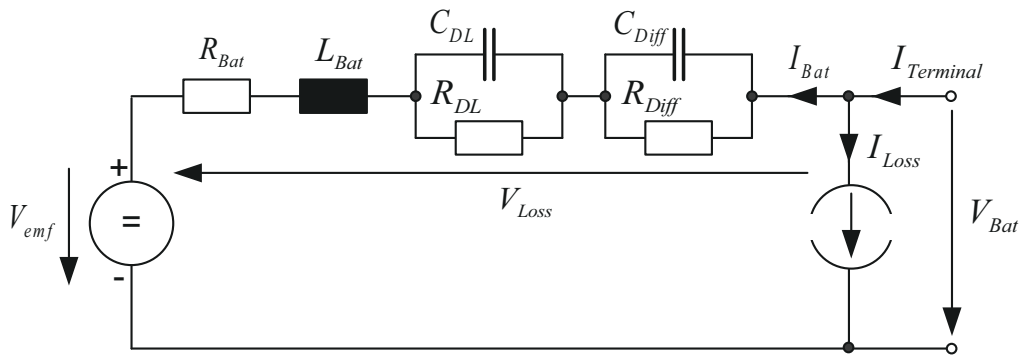

A load reference-arrow system is used for the battery. The charge current is positive and the discharge is negative.

The battery terminal voltage can be calculated with the following equation:

$$V_{\mathrm{Bat}} = V_{\mathrm{emf}} - V_{\mathrm{Loss}}$$

The initial voltage is the sum of the individual cell voltages according to the state of charge:

$$V_{emf} = n_{Cell}\, V_{Cell}(SOC)$$

With the voltage loss according to the charge and discharge current, the final battery terminal voltage can be calculated:

$$V_{\mathrm{Loss}} = \frac{1}{C_{DL}}\int\left(I_{Bat} - \frac{V_{C\,DL}}{R_{DL}}\right)dt + \frac{1}{C_{Diff}}\int\left(I_{Bat} - \frac{V_{C\,Diff}}{R_{Diff}}\right)dt + I_{Bat}R_{Bat}(SOC, I_{Bat}, T_{Bat}, SOH) + \frac{dI_{Bat}}{dt}L_{Bat}$$

where:

V_{Bat}	is the battery terminal voltage
V_{emf}	is the electromotive force voltage (balanced voltage)
V_{Loss}	is the voltage loss
V_{Cell}	is the cell voltage
$V_{C\,DL}$	is the voltage loss double layer capacitance
$V_{C\,Diff}$	is the voltage loss diffusion capacitance
n_{Cell}	is the number of battery cells
C_{DL}	is the double layer capacity
R_{DL}	is the double layer resistance
C_{Diff}	is the diffusion capacitance
R_{Diff}	is the diffusion resistance
R_{Bat}	is the battery resistance
L_{Bat}	is the battery inductance
T_{Bat}	is the battery temperature
I_{Bat}	is the battery current
SOC	is the state of charge

Thermal model

The thermal battery model simulates the temperature for each separate cell and the interaction with neighbor cells.

The thermal effects that are considered are:

- Heat generation due to internal losses according to the current and the voltage loss
- Heat generation according to the chemical battery reaction
- Heat transfer between cells based on heat conduction
- Heat generation according to the loss reaction, e.g. gassing effects
- Heat losses according to the heat flux due to thermal radiation
- Heat losses caused by the cooling system
- External user-defined heat generation or loss for each cell

The illustration shows the battery topology which is defined by a number of cells that are placed in the x-direction and a number of cells placed in the y-direction. The cells are connected in series. The line on top shows the current flow and therefore the electrical connection. The index number (Idx) describes at which vector index the cell values are placed in the parameter and simulation signal vectors.

The cell geometry is defined via dimension values in x-, y- and z-direction.

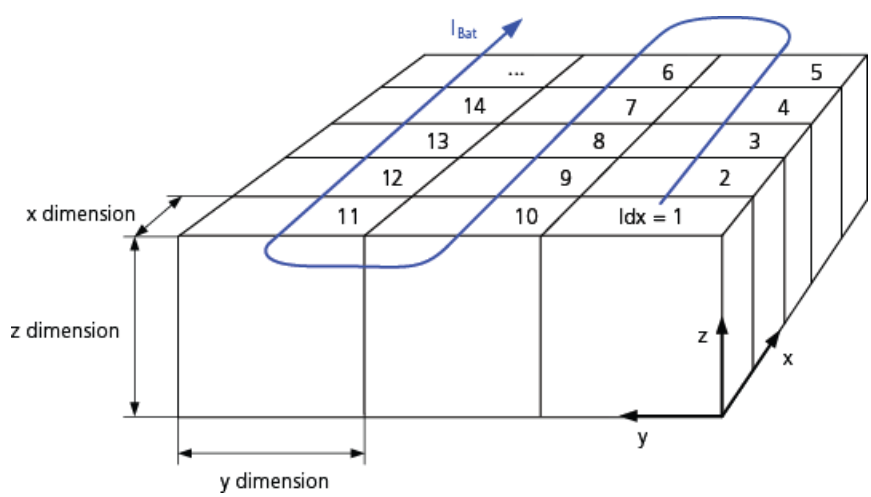

The model is based on a balance of the heat generation and the heat loss power that is simulated for each cell:

$$T_{Cell} = T_{Cell,0} + \frac{1}{c_{Th} m_{Cell}} \int P_W dt$$

The heat generation and the heat loss power take the following effects into account:

$$P_W = P_{Joule} + P_{MainReaction} + P_{Transfer} + P_{LossReaction} - P_{Radiation} - P_{Cooling} + P_{Extern}$$

Heat generation due to internal losses according to the current and the voltage loss:

$$P_{Joule} = I_{Bat}\, V_{Loss}$$

Heat generation according to the chemical battery reaction, where the factor c_{MR} depends on the battery technology:

$$P_{MainReaction} = c_{MR}\, I_{Bat}$$

Heat generation or heat losses that is caused by thermal power transfer between neighboring cells. This thermal conduction is described by Fourier's law:

$$P_{Transfer} = A_{Transfer}\, \lambda\, \frac{T_{Cell\,1} - T_{Cell\,2}}{d}$$

Heat generation according to the loss reaction e.g. the gassing behavior:

$$P_{LossReaction} = V_{Bat}\, I_{Loss}$$

with the loss current

$$I_{Loss} = I_0\, e\left(\frac{V_{Bat} - V_N}{K_1} + K_2 \frac{T_{Bat} - T_N}{T_{Bat} T_N}\right)$$

Heat losses according to the heat flux due to thermal radiation. Where the thermal radiation is only active for marginal cell areas that have contact to the ambient temperature.

$$P_{Radiation} = \varepsilon\, A_{Rad}\, \sigma\left(T_{Bat}^4 - T_{Ambient}^4\right)$$

A cooling plate can be simulated for the six battery pack surfaces at the top, bottom, front, back, left and right. For these cooling areas a heat flux density (heat rate per unit area) can be set via a battery model inport. Depending on this setting, an additional cooling power is set for the corresponding cells. The thermal radiation effect for the cooled surfaces is disabled.

$$P_{Cooling} = q\, A_{Cooling}$$

The following illustration shows how the cooling plate positions are defined.

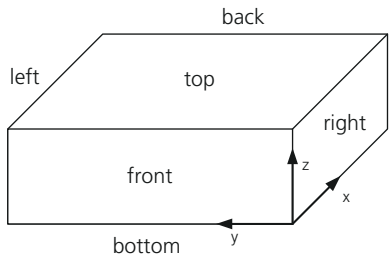

where:

$T_{Cell,0}$	is the initial battery temperature
C_{Th}	is the thermal capacity, typically 800 J/(Kg K) for valve regulated lead acid, 750 J/(Kg K) for NiMH, and 700 J/(Kg K) for Li-Ion batteries
m_{Cell}	is the battery cell mass
P_W	is the heat power
c_{MR}	is the thermal coefficient that describes the thermal behavior of the main chemical reaction, for example, 68.4 mV for lead acid,

	140 mV for NiCd, -50 mV for NiMH, and 30 mV for Li-Ion batteries
I_0	is the sum of loss currents at nominal conditions
V_N	is the nominal cell voltage, for example, 2 V for lead acid, 1.2 V for NiCd, and NiMH and 3.2 ... 4.0 V for Li-Ion batteries
T_N	is the nominal temperature, per definition 300 K
T_{Cell}	is the cell temperature
$T_{Cell\,1}$, $T_{Cell\,2}$	is the cell temperature of two neighbor cells
$T_{Ambient}$	is the ambient temperature
K_1	is the constant that shows dependence on clamp voltage e.g. 90mV for lead acid closed
K_2	is the constant that shows dependence on temperature e.g. 6000 K
A_{Rad}	is the radiating surface
$A_{Transfer}$	is the contact area between two cells
$A_{Cooling}$	is the cooling area
q	is the heat flux density
σ	is the Stefan-Boltzmann constant, 5.67 * 10^{-8} W/(m^2K^4)
ε	is the integral thermal emission factor, for example 0.7 ... 0.9 for usual housing materials
λ	is the thermal conductivity
d	is the cell dimension

If only the mean temperature of the complete battery pack is needed, the thermal simulation of each cell can be disabled via the thermal mode parameter Sw_Thermal. If the thermal simulation of each cell is disabled, the cooling plate simulation is not available.

State of charge model

The state of charge is calculated according to the following currents:

- Loss current from the thermal model I_{Loss}
- Battery current charge or discharge current

$I_{\mathrm{Bat}} - I_{\mathrm{Loss}} > 0$: Alternator charges the battery

$I_{\mathrm{Bat}} - I_{\mathrm{Loss}} < 0$: Load current discharges the battery

$$SOC = SOC_0 + \frac{1}{C_N(T) \cdot SOH} \int (I_{Terminal} - I_{Loss})\, dt$$

where:

SOC	is the state of charge
SOC_0	is the initial state of charge
C_N	is the nominal capacity of battery
I_{Terminal}	is the terminal current
I_{Loss}	is the loss current

Multicell model

The battery multicell model supports the serial connection of maximum 500 battery cells and calculates the voltage of each separate cell. It simulates one

battery reference cell in detail, which is representative for all cells in the battery, and one system that calculates the voltage difference between the reference cell and each separate cell.

Different voltages of the cells can result from differences in the state of charge, the inner resistance or from an additional charge or discharge current for each cell, for example, from a battery management system. The voltage difference of the cell to the battery reference voltage is calculated as follows:

$$\Delta V_{Cell} = \Delta V_{SOC}(SOC) + \Delta V_{\Delta R}(\Delta R_{Cell}) + \Delta V_{I}(I_{Cell,ext})$$

where:

ΔV_{Cell}	is the voltage difference to the battery reference voltage
$\Delta V_{SOC}(SOC)$	is the voltage difference depending on the SOC of the cell
$\Delta V_{\Delta R}(\Delta R_{Cell})$	is the voltage difference depending on the resistance difference of the cell
$\Delta V_{I}(I_{Cell,ext})$	is the voltage difference depending on an additional external cell current

Inports

The following table shows the inports:

Name	Unit	Description
Const_SOC_Ext_Init	[%]	Initial state of charge, usage is selected via Sw_SOC_Init block parameter
I_Bat_Source	[A]	Current
I_Delta_Multicell	[A]	Vector of additional external cell current, for example, from a battery management system. Vector size must be 500 (maximum number of cells)
P_Thermal	[W]	External thermal power, negative value for cooling, positive value for heating; The inport is used only if the thermal mode (Sw_Thermal) is set to 0 (battery mean temperature simulation). Otherwise, the P_Thermal_Cell inport is used.
P_Thermal_Cell	[W]	Vector with additional thermal power for each cell. Negative value for cooling, positive value for heating. See above for the mapping of the vector index to the geometrical position of the cell.
q_Cooling	[W/m^2]	Vector with heat flux density for each battery pack cooling plate. If the value is set to zero, cooling for this area is disabled. See above for the definition of the cooling plate positions.
Reset	[0|1]	Reset
Reset_SOC	[]	Reset state of charge to initial value
SOH	[1_0]	State of health
T_Ambient	[°C]	Ambient temperature

Outports

The following table shows the outports:

Name	Unit	Description
ASMSignalBus	[]	Signal bus that contains signals of ASM components. Refer to ASMSignalBus (ASM User Guide 🕮).

Name	Unit	Description
R_Bat	[Ohm]	Internal resistance
T_Bat	[°C]	Battery mean temperature: sum of all cell temperatures divided by number of cells
T_Bat_Cell	[°C]	Vector with the temperature of each separate cell. See above for the mapping of the vector index to the geometrical position of the cell.
V_Bat	[V]	Battery voltage
V_Bat_Cell	[V]	Vector with voltage of each separate cell
V_emf_bat	[V]	Electromotive force voltage
V_Loss_Bat	[V]	Voltage loss

Parameters

The following table shows the block parameters:

Name	Unit	Description
Const_A_Surface	[m^2]	Relevant surface A_{Rad} for thermal emission. This parameter is only used if the thermal mode (Sw_Thermal) is set to 0 (battery mean temperature simulation). Otherwise, the surface is calculated from the cell dimension and battery topology.
Const_C_diff_Charge	[F]	Diffusion capacitance charging C_{Diff} of one cell (reference cell)
Const_C_diff_Discharge	[F]	Diffusion capacitance discharging C_{Diff} of one cell (reference cell)
Const_c_MainReaction	[]	Thermal coefficient (battery constant c_{MR}) by main chemical reaction, for example, 68.4 mV for lead acid, -140 mV for NiCd, -50 mV for NiMH and 30 mV for Li-Ion batteries
Const_C_Nom_Multicell	[Ah]	Vector with nominal capacity K_N for each cell
Const_Capacity_nom	[Ah]	Nominal block capacity K_N *of reference cell*
Const_Capacity_Thermal	[J/kg K]	Thermal capacity c_{Bat}
Const_Cd_Charge	[F]	Double layer capacitance charging C_{DL} of one cell (of reference cell)
Const_Cd_Discharge	[F]	Double layer capacitance discharging C_{DL} (reference cell)
Const_Conductivity	[W/(m K)]	Thermal cell conductivity
Const_Dimension_Cell	[m]	Vector with cell dimension in x-,y- and z-direction. See above for the definition of the x-, y- and z-directions.
Const_Factor_ThermalEmission	[]	Integral thermal emission factor **ε**, for example, 0.7 … 0.9 for usual housing materials
Const_I_Loss_nom	[A]	Sum of loss currents I_0 at nominal temperature and voltage
Const_L_Charge	[H]	Battery inductance charging L_{Bat} of one cell (reference cell)
Const_L_Discharge	[H]	Battery inductance discharging L_{Bat}
Const_K1	[V]	Differential voltage loss coefficient K1
Const_K2	[K]	Differential thermal loss coefficient K2
Const_m_Batt	[kg]	Battery mass m_{Bat}
Const_n_x_Cells	[]	Number of cells in x-direction
Const_n_y_Cells	[]	Number of cells in y-direction

Name	Unit	Description
Const_R_Delta_Multicell	[Ohm]	Vector with resistance difference ΔR_{Cell} from reference cell for each cell
Const_R_diff_Charge	[Ohm]	Diffusion resistance charging R_{Diff} of one cell (reference cell)
Const_R_diff_Discharge	[Ohm]	Diffusion resistance discharging R_{Diff} of one cell (reference cell)
Const_Rd_Charge	[Ohm]	Double layer resistance charging R_{DL} of one cell (reference cell)
Const_Rd_Discharge	[Ohm]	Double layer resistance discharging R_{DL}(reference cell)
Const_SOC_Init	[%]	Initial state of charge (reference cell)
Const_StateOfCharge_Init_Multicell	[%]	Vector with initial state of charge for each cell (relative value to initial SOC of reference cell)
Const_Temp_nom	[K]	Base temperature T_N for nominal values
Const_T_Init_Multicell	[K]	Vector with the initial temperature of each separate cell. See above for the mapping of the vector index to the geometrical position of the cell.
Const_V_Cell_nom	[V]	Nominal cell voltage V_N of reference cell, for example, 2 V for lead acid, 1.2 V for NiCd and NiMH and 3.2 ... 4.0 V for Li-Ion batteries
Map_Factor_Capacity	[]	Battery capacity factor = f(temperature[K])
Map_Factor_CellVoltage	[]	Cell voltage factor = f(state of charge[%]) This factor multiplied with the nominal cell voltage supply the resulting cell voltage.
Map_R_Charge	[Ohm]	Battery charging resistance R_{Bat} of one cell = f(SOC [%], current [A]) (reference cell)
Map_R_Discharge	[Ohm]	Battery discharging resistance R_{Bat} of one cell = f(SOC [%], current [A]) (reference cell)
Map_R_Factor_Charge	[0_1]	Battery resistance factor charging = f(temperature[K]) (reference cell)
Map_R_Factor_Discharge	[0_1]	Battery resistance factor discharging = f(temperature[K]) (reference cell)
Map_R_Factor_SOH_Charging	[0_1]	Battery resistance factor charging=f(SOH[0_1])
Map_R_Factor_SOH_Discharging	[0_1]	Battery resistance factor discharging=f(SOH[0_1])
StepSize	[s]	Simulation step size
Sw_Diffusion	[]	Switch for diffusion simulation: ▪ 0: Disable ▪ 1: Enable
Sw_DoubleLayer	[]	Switch for double layer simulation: ▪ 0: Disable ▪ 1: Enable
Sw_I_Loss	[]	Switch for loss current simulation: ▪ 0: Disable ▪ 1: Enable
Sw_Inductance	[]	Switch for inductance simulation: ▪ 0: Disable ▪ 1: Enable

Name	Unit	Description
Sw_SOC_Init	[]	Switch to define which initial SOC value is used ▪ 0: Internal value defined by a block parameter ▪ 1: External value via a block inport
Sw_Thermal		Switch for thermal mode ▪ 0: Only one battery mean temperature is simulated. ▪ 1: The temperature is simulated for each separate cell.

Processing information

You have to parameterize the parameter values for the different resistances, the inductance, and capacitances for one battery cell. If these values are only available for the complete battery pack, you have to calculate the cell values. To do this, you can divide the battery pack resistance and inductance values by the number of cells. For the dynamic diffusion and double layer behavior, do not change the time constant of the RC parallel circuit. To achieve this, you have to multiply the capacitance values with the **Number of cell** parameter.

For a basic battery parameterization, the important parameters are the battery capacitance and the cell voltage that depend on the SOC. For the internal resistance, you can use a constant value without SOC, temperature, and current dependence. You can neglect the inductance for Li-ion batteries. Therefore, you can use the switch for inductance simulation to disable the induction simulation.

The model simulates the dynamic voltage drop behavior, such as the double layer and diffusion effects with two RC circuits. For a basic parametrization, you can disable these effects with the switch of the double layer and diffusion behavior.

For a simple dynamic voltage drop simulation, you can use only one RC circuit and disable the other via the switch. You can identify the time constant τ of the used RC circuit, and therefore the parameters for the resistance and capacitance, via a battery voltage measurement. For this measurement, you apply a current pulse to the battery and evaluate the battery voltage response. You can determine the time constant, and therefore the value of the resistance and capacitance, as shown in the following graphic:

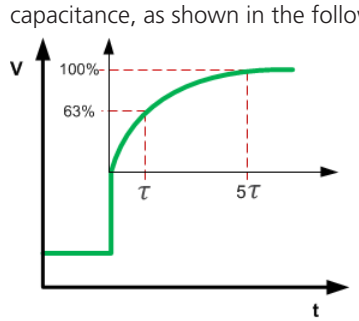

Where: $\tau = R \cdot C$

If the model simulates a detailed dynamic voltage drop with double layer (low time constant) and diffusion behavior (higher time constant), you can use an electro-chemical impedance spectroscopy (EIS) measurement to parameterize the model. The measurement points the complex impedance of the battery in the

frequency response locus (Nyquist Plot). The following equation displays the complex impedance of the battery:

$$\underline{Z} = Re\{\underline{Z}\} + j\, Im\{\underline{Z}\} = |\underline{Z}|e^{j\,\varphi(\underline{Z})}$$

To find the resistance and capacitance values of the two RC circuits, you can use an optimization routine that verifies the RC values to get an match between simulation result and measurement. The following graphic shows an example of an EIS measurement:

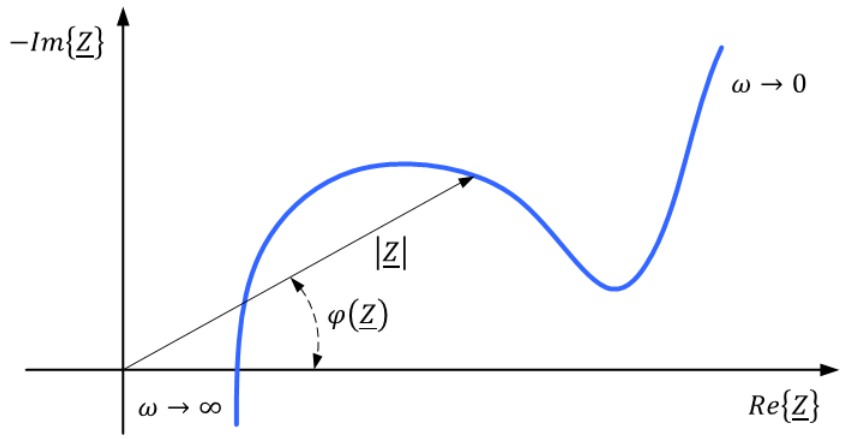

The following example parameterizations for different battery types are available:

- Lead-acid battery
- Nickel-metal hydride battery
- Lithium-ion battery

Lead-acid battery

- LeadAcid_AGM_89Ah: This absorbed glass (AGM) battery is a class of a valve-regulated lead-acid (VRLA) battery with a capacity of 89 Ah and an open-circuit voltage of 2.0 V. This technology represents a low-maintenance rechargeable battery with high power density and low internal resistance.

Nickel-metal hydride battery

- NiMH_0p8Ah: This parameterization represents a rechargeable nickel-metal hydride (NiMH) consumer battery with a capacity of 800 mAh and an open-circuit voltage of 1.2 V.
- NiMH_6p5Ah: This parameterization represents a rechargeable nickel-metal hydride (NiMH) battery with a capacity of 6.5 Ah and an open-circuit voltage of 1.2 V. This type of battery is often used in hybrid vehicle applications.

Lithium-ion battery

- LiIon_NMC_Polimer_HE_53Ah: This parameterization represents a high energy lithium-ion NMC polymer battery. The battery cell is based on lithium nickel manganese cobalt (NMC) cathodes and a graphite-based anode. It has a capacity of 53 Ah and an open-circuit voltage of 3.7 V. This type of battery is often used in hybrid and pure electric vehicle applications.

- LiIon_NMC_Polimer_HP_5Ah: This parameterization represents a high power lithium-ion NMC polymer battery. The battery cell is based on lithium nickel manganese cobalt (NMC) cathodes and a graphite-based anode. It has a capacity of 5 Ah and an open-circuit voltage of 3.65 V.
- LiIon_LFP_15Ah: This parameterization represents a lithium-iron-phosphate (LFP) battery cell with a capacity of 15 Ah and an open-circuit voltage of 3.3 V.
- LiIon_LTO_1Ah: This parameterization represents a lithium-titanate (LTO) battery with a capacity of 1 Ah and an open-circuit voltage of 2.52 V. This type of lithium-ion battery has an excellent life cycle and great safety characteristics but a lower specific energy and voltage than conventional lithium-ion batteries. LTO batteries are used in automotive electric applications.

Related topics

References

Battery Multicell V10 (ModelDesk Parameterizing 🕮)

Battery Multicell (Up to Version 11.0)

Description

The BATTERY_MULTICELL model calculates the terminal voltage, the battery state of charge and the battery temperature of each cell as functions of the charge and discharge current.

The following illustration shows the Simulink representation of the battery multicell.

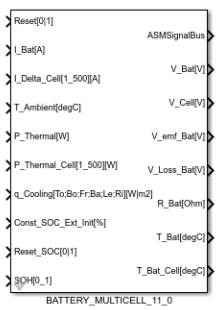

The battery multicell model consists of three submodules [Sie06]:

- Terminal voltage model for calculating the battery terminal voltage
- Thermal model for calculating the battery temperature of each separate cell
- State-of-Charge Model (SOC) for the calculation of battery state of charge

The next three sections describe the different battery submodules:

Terminal voltage model

The terminal voltage model contains different battery effects:

- Voltage of each battery cell according to the state of charge (SOC)
- Inner resistance of the battery
- Inductance of the battery
- Double layer behavior
- Diffusion behavior

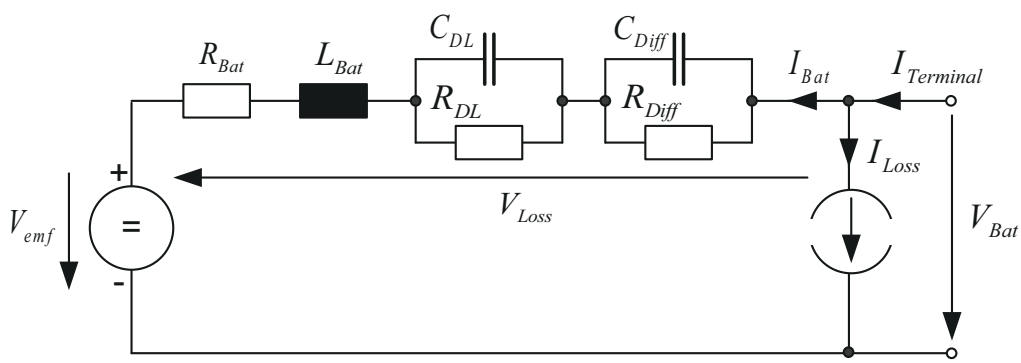

A load reference-arrow system is used for the battery. The charge current is positive and the discharge is negative.

The battery terminal voltage can be calculated with the following equation:

$$V_{\mathrm{Bat}} = V_{\mathrm{emf}} - V_{\mathrm{Loss}}$$

The initial voltage is the sum of the individual cell voltages according to the state of charge:

$$V_{emf} = n_{Cell}\, V_{Cell}(SOC)$$

With the voltage loss according to the charge and discharge current, the final battery terminal voltage can be calculated:

$$V_{\text{Loss}} = \frac{1}{C_{DL}}\int\left(I_{Bat} - \frac{V_{C\,DL}}{R_{DL}}\right)dt + \frac{1}{C_{Diff}}\int\left(I_{Bat} - \frac{V_{C\,Diff}}{R_{Diff}}\right)dt + I_{Bat}R_{Bat}(SOC, I_{Bat}, T_{Bat}, SOH) + \frac{dI_{Bat}}{dt}L_{Bat}$$

where:

V_{Bat}	is the battery terminal voltage
V_{emf}	is the electromotive force voltage (balanced voltage)
V_{Loss}	is the voltage loss
V_{Cell}	is the cell voltage
$V_{C\,DL}$	is the voltage loss double layer capacitance
$V_{C\,Diff}$	is the voltage loss diffusion capacitance
n_{Cell}	is the number of battery cells
C_{DL}	is the double layer capacity
R_{DL}	is the double layer resistance
C_{Diff}	is the diffusion capacitance
R_{Diff}	is the diffusion resistance
R_{Bat}	is the battery resistance
L_{Bat}	is the battery inductance
T_{Bat}	is the battery temperature
I_{Bat}	is the battery current
SOC	is the state of charge

Thermal model

The thermal battery model simulates the temperature for each separate cell and the interaction with neighbor cells.

The thermal effects that are considered are:

- Heat generation due to internal losses according to the current and the voltage loss
- Heat generation according to the chemical battery reaction
- Heat transfer between cells based on heat conduction
- Heat generation according to the loss reaction, e.g. gassing effects
- Heat losses according to the heat flux due to thermal radiation
- Heat losses caused by the cooling system
- External user-defined heat generation or loss for each cell

The illustration shows the battery topology which is defined by a number of cells that are placed in the x-direction and a number of cells placed in the y-direction. The cells are connected in series. The line on top shows the current flow and therefore the electrical connection. The index number (Idx) describes at which vector index the cell values are placed in the parameter and simulation signal vectors.

The cell geometry is defined via dimension values in x-, y- and z-direction.

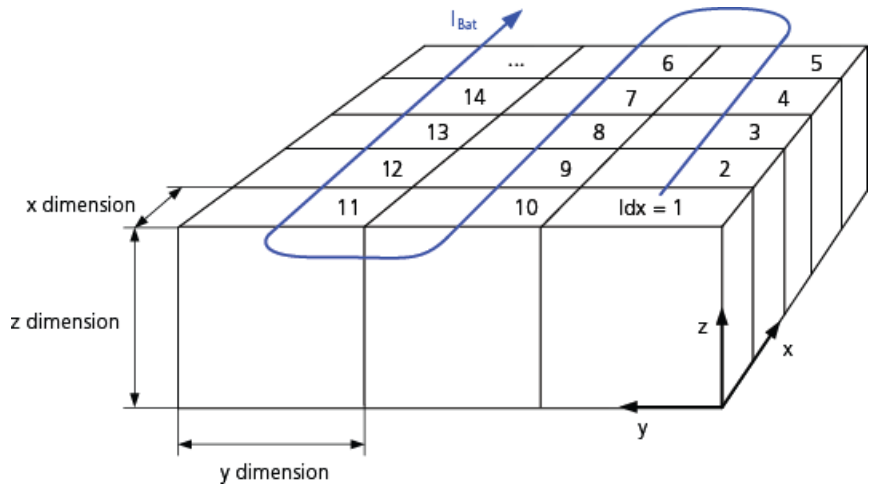

The model is based on a balance of the heat generation and the heat loss power that is simulated for each cell:

$$T_{Cell} = T_{Cell,0} + \frac{1}{C_{Th} m_{Cell}} \int P_W dt$$

The heat generation and the heat loss power take the following effects into account:

$$P_W = P_{Joule} + P_{MainReaction} + P_{Transfer} + P_{LossReaction} - P_{Radiation} - P_{Cooling} + P_{Extern}$$

Heat generation due to internal losses according to the current and the voltage loss:

$$P_{Joule} = I_{Bat} V_{Loss}$$

Heat generation according to the chemical battery reaction, where the factor c_{MR} depends on the battery technology:

$$P_{MainReaction} = c_{MR} I_{Bat}$$

Heat generation or heat losses that is caused by thermal power transfer between neighboring cells. This thermal conduction is described by Fourier's law:

$$P_{Transfer} = A_{Transfer} \lambda \frac{T_{Cell\,1} - T_{Cell\,2}}{d}$$

Heat generation according to the loss reaction e.g. the gassing behavior:

$$P_{LossReaction} = V_{Bat} I_{Loss}$$

with the loss current

$$I_{Loss} = I_0 e\left(\frac{V_{Bat} - V_N}{K_1} + K_2 \frac{T_{Bat} - T_N}{T_{Bat} T_N}\right)$$

Heat losses according to the heat flux due to thermal radiation. Where the thermal radiation is only active for marginal cell areas that have contact to the ambient temperature.

$$P_{Radiation} = \varepsilon\, A_{Rad}\, \sigma\left(T_{Bat}^4 - T_{Ambient}^4\right)$$

A cooling plate can be simulated for the six battery pack surfaces at the top, bottom, front, back, left and right. For these cooling areas a heat flux density (heat rate per unit area) can be set via a battery model inport. Depending on this setting, an additional cooling power is set for the corresponding cells. The thermal radiation effect for the cooled surfaces is disabled.

$$P_{Cooling} = q\, A_{Cooling}$$

The following illustration shows how the cooling plate positions are defined.

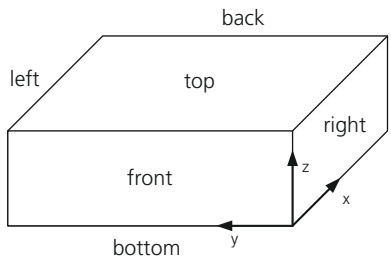

where:

$T_{Cell,0}$	is the initial battery temperature
C_{Th}	is the thermal capacity, typically 800 J/(Kg K) for valve regulated lead acid, 750 J/(Kg K) for NiMH, and 700 J/(Kg K) for Li-Ion batteries
m_{Cell}	is the battery cell mass
P_W	is the heat power
c_{MR}	is the thermal coefficient that describes the thermal behavior of the main chemical reaction, for example, 68.4 mV for lead acid,

	140 mV for NiCd, -50 mV for NiMH, and 30 mV for Li-Ion batteries
I_0	is the sum of loss currents at nominal conditions
V_N	is the nominal cell voltage, for example, 2 V for lead acid, 1.2 V for NiCd, and NiMH and 3.2 ... 4.0 V for Li-Ion batteries
T_N	is the nominal temperature, per definition 300 K
T_{Cell}	is the cell temperature
$T_{Cell\,1}$, $T_{Cell\,2}$	is the cell temperature of two neighbor cells
$T_{Ambient}$	is the ambient temperature
K_1	is the constant that shows dependence on clamp voltage e.g. 90mV for lead acid closed
K_2	is the constant that shows dependence on temperature e.g. 6000 K
A_{Rad}	is the radiating surface
$A_{Transfer}$	is the contact area between two cells
$A_{Cooling}$	is the cooling area
q	is the heat flux density
σ	is the Stefan-Boltzmann constant, 5.67 * 10^{-8} W/(m^2K^4)
ε	is the integral thermal emission factor, for example 0.7 ... 0.9 for usual housing materials
λ	is the thermal conductivity
d	is the cell dimension

If only the mean temperature of the complete battery pack is needed, the thermal simulation of each cell can be disabled via the thermal mode parameter Sw_Thermal. If the thermal simulation of each cell is disabled, the cooling plate simulation is not available.

State of charge model

The state of charge is calculated according to the following currents:

- Loss current from the thermal model I_{Loss}
- Battery current charge or discharge current

$I_{\mathrm{Bat}} - I_{\mathrm{Loss}} > 0$: Alternator charges the battery

$I_{\mathrm{Bat}} - I_{\mathrm{Loss}} < 0$: Load current discharges the battery

$$SOC = SOC_0 + \frac{1}{C_N(T) \cdot SOH} \int (I_{Terminal} - I_{Loss})\, dt$$

where:

SOC	is the state of charge
SOC_0	is the initial state of charge
C_N	is the nominal capacity of battery
I_{Terminal}	is the terminal current
I_{Loss}	is the loss current

Multicell model

The battery multicell model supports the serial connection of maximum 500 battery cells and calculates the voltage of each separate cell. It simulates one

battery reference cell in detail, which is representative for all cells in the battery, and one system that calculates the voltage difference between the reference cell and each separate cell.

Different voltages of the cells can result from differences in the state of charge, the inner resistance or from an additional charge or discharge current for each cell, for example, from a battery management system. The voltage difference of the cell to the battery reference voltage is calculated as follows:

$$\Delta V_{Cell} = \Delta V_{SOC}(SOC) + \Delta V_{\Delta R}(\Delta R_{Cell}) + \Delta V_{I}(I_{Cell,ext})$$

where:

ΔV_{Cell}	is the voltage difference to the battery reference voltage
$\Delta V_{SOC}(SOC)$	is the voltage difference depending on the SOC of the cell
$\Delta V_{\Delta R}(\Delta R_{Cell})$	is the voltage difference depending on the resistance difference of the cell
$\Delta V_{I}(I_{Cell,ext})$	is the voltage difference depending on an additional external cell current (balancing current)

Inports

The following table shows the inports:

Name	Unit	Description
Const_SOC_Ext_Init	[%]	Initial state of charge, usage is selected via Sw_SOC_Init block parameter
I_Bat_Source	[A]	Current
I_Delta_Multicell	[A]	Vector of additional external cell current, for example the balancing current, from a battery management system. Vector size must be 500 (maximum number of cells)
P_Thermal	[W]	External thermal power, negative value for cooling, positive value for heating; The inport is used only if the thermal mode (Sw_Thermal) is set to 0 (battery mean temperature simulation). Otherwise, the P_Thermal_Cell inport is used.
P_Thermal_Cell	[W]	Vector with additional thermal power for each cell. Negative value for cooling, positive value for heating. See above for the mapping of the vector index to the geometrical position of the cell.
q_Cooling	[W/m^2]	Vector with heat flux density for each battery pack cooling plate. If the value is set to zero, cooling for this area is disabled. See above for the definition of the cooling plate positions.
Reset	[0|1]	Reset
Reset_SOC	[]	Reset state of charge to initial value
SOH	[1_0]	State of health
T_Ambient	[°C]	Ambient temperature

Outports

The following table shows the outports:

Name	Unit	Description
ASMSignalBus	[]	Signal bus that contains signals of ASM components. Refer to ASMSignalBus (ASM User Guide 🕮).

Name	Unit	Description
R_Bat	[Ω]	Internal resistance
T_Bat	[°C]	Battery mean temperature: sum of all cell temperatures divided by number of cells
T_Bat_Cell	[°C]	Vector with the temperature of each separate cell. See above for the mapping of the vector index to the geometrical position of the cell.
V_Bat	[V]	Battery voltage
V_Bat_Cell	[V]	Vector with voltage of each separate cell
V_emf_bat	[V]	Electromotive force voltage
V_Loss_Bat	[V]	Voltage loss

Parameters

The following table shows the block parameters:

Name	Unit	Description
Const_A_Surface	[m^2]	Relevant surface A_{Rad} for thermal emission. This parameter is only used if the thermal mode (Sw_Thermal) is set to 0 (battery mean temperature simulation). Otherwise, the surface is calculated from the cell dimension and battery topology.
Const_C_diff_Charge	[F]	Diffusion capacitance charging C_{Diff} of one cell (reference cell)
Const_C_diff_Discharge	[F]	Diffusion capacitance discharging C_{Diff} of one cell (reference cell)
Const_c_MainReaction	[]	Thermal coefficient (battery constant c_{MR}) by main chemical reaction, for example, 68.4 mV for lead acid, -140 mV for NiCd, -50 mV for NiMH and 30 mV for Li-Ion batteries
Const_Capacity_Delta_Multicell	[Ah]	Vector with capacity difference to reference cell for each cell
Const_Capacity_nom	[Ah]	Nominal block capacity C_N *of reference cell*
Const_Capacity_Thermal	[J/kg K]	Thermal capacity c_{Th}
Const_Cd_Charge	[F]	Double layer capacitance charging C_{DL} of one cell (of reference cell)
Const_Cd_Discharge	[F]	Double layer capacitance discharging C_{DL} (reference cell)
Const_Conductivity	[W/(m K)]	Thermal cell conductivity
Const_Dimension_Cell	[m]	Vector with cell dimension in x-,y- and z-direction. See above for the definition of the x-, y- and z-directions.
Const_Factor_ThermalEmission	[]	Integral thermal emission factor **ε**, for example, 0.7 … 0.9 for usual housing materials
Const_I_Loss_nom	[A]	Sum of loss currents I_0 at nominal temperature and voltage
Const_L_Charge	[H]	Battery inductance charging L_{Bat} of one cell (reference cell)
Const_L_Discharge	[H]	Battery inductance discharging L_{Bat} of one cell (reference cell)
Const_K1	[V]	Differential voltage loss coefficient K1
Const_K2	[K]	Differential thermal loss coefficient K2
Const_m_Batt	[kg]	Battery mass m_{Bat}
Const_n_x_Cells	[]	Number of cells in x-direction
Const_n_y_Cells	[]	Number of cells in y-direction

Name	Unit	Description
Const_R_Delta_Multicell	[Ω]	Vector with resistance difference ΔR_{Cell} from reference cell for each cell
Const_R_diff_Charge	[Ω]	Diffusion resistance charging R_{Diff} of one cell (reference cell)
Const_R_diff_Discharge	[Ω]	Diffusion resistance discharging R_{Diff} of one cell (reference cell)
Const_Rd_Charge	[Ω]	Double layer resistance charging R_{DL} of one cell (reference cell)
Const_Rd_Discharge	[Ω]	Double layer resistance discharging R_{DL}(reference cell)
Const_SOC_Init	[%]	Initial state of charge (reference cell)
Const_StateOfCharge_Init_Multicell	[%]	Vector with initial state of charge for each cell (relative value to initial SOC of reference cell)
Const_Temp_nom	[K]	Base temperature T_N for nominal values
Const_T_Init	[°C]	Initial cell temperature
Const_T_Init_Delta_Multicell	[°C]	Vector with the initial temperature difference to the initial cell temperature for each separate cell. See above for the mapping of the vector index to the geometrical position of the cell.
Const_V_Cell_nom	[V]	Nominal cell voltage V_N of reference cell, for example, 2 V for lead acid, 1.2 V for NiCd and NiMH and 3.2 ... 4.0 V for Li-Ion batteries
Map_Factor_Capacity	[]	Battery capacity factor = f(temperature[°C])
Map_Factor_Capacity_SOH	[0_1]	Block capacity SOH factor = f(SOH[0_1]); This factor multiplied with the nominal capacitance results in the actual battery capacitance.
Map_Factor_CellVoltage	[]	Cell voltage factor = f(state of charge[%]) This factor multiplied with the nominal cell voltage supply the resulting cell voltage.
Map_R_Charge	[Ω]	Battery charging resistance R_{Bat} of one cell = f(SOC [%], temperature [°C]) (reference cell)
Map_R_Discharge	[Ω]	Battery discharging resistance R_{Bat} of one cell = f(SOC [%], temperature [°C]) (reference cell)
Map_R_Factor_Charge	[]	Battery resistance factor charging = f(current[A]) (reference cell); This factor multiplied with the resistance from Map_R_Charge results in the actual internal resistance.
Map_R_Factor_Discharge	[]	Battery resistance factor discharging = f(current[A]) (reference cell); This factor multiplied with the resistance from Map_R_Discharge results in the actual internal resistance.
Map_R_Factor_SOH_Charging	[]	Battery resistance factor charging=f(SOH[0_1])); This factor multiplied with the resistance from Map_R_Discharge results in the actual internal resistance.
Map_R_Factor_SOH_Discharging	[]	Battery resistance factor discharging=f(SOH[0_1])); This factor multiplied with the resistance from Map_R_Discharge results in the actual internal resistance.
StepSize	[s]	Simulation step size
Sw_Diffusion	[0|1]	Switch for diffusion simulation: ▪ 0: Disable ▪ 1: Enable

Name	Unit	Description
Sw_DoubleLayer	[0|1]	Switch for double layer simulation: ▪ 0: Disable ▪ 1: Enable
Sw_I_Loss	[0|1]	Switch for loss current simulation: ▪ 0: Disable ▪ 1: Enable
Sw_Inductance	[0|1]	Switch for inductance simulation: ▪ 0: Disable ▪ 1: Enable
Sw_SOC_Init	[0|1]	Switch to define which initial SOC value is used ▪ 0: Internal value defined by a block parameter ▪ 1: External value via a block inport
Sw_Thermal	[0|1]	Switch for thermal mode ▪ 0: Only one battery mean temperature is simulated. ▪ 1: The temperature is simulated for each separate cell.

Processing information

You have to parameterize the parameter values for the different resistances, the inductance, and capacitances for one battery cell. If these values are only available for the complete battery pack, you have to calculate the cell values. To do this, you can divide the battery pack resistance and inductance values by the number of cells. For the dynamic diffusion and double layer behavior, do not change the time constant of the RC parallel circuit. To achieve this, you have to multiply the capacitance values with the **Number of cell** parameter.

For a basic battery parameterization, the important parameters are the battery capacitance and the cell voltage that depend on the SOC. For the internal resistance, you can use a constant value without SOC, temperature, and current dependence. You can neglect the inductance for Li-ion batteries. Therefore, you can use the switch for inductance simulation to disable the induction simulation.

The model simulates the dynamic voltage drop behavior, such as the double layer and diffusion effects with two RC circuits. For a basic parametrization, you can disable these effects with the switch of the double layer and diffusion behavior.

For a simple dynamic voltage drop simulation, you can use only one RC circuit and disable the other via the switch. You can identify the time constant τ of the used RC circuit, and therefore the parameters for the resistance and capacitance, via a battery voltage measurement. For this measurement, you apply a current pulse to the battery and evaluate the battery voltage response. You can determine the time constant, and therefore the value of the resistance and capacitance, as shown in the following graphic:

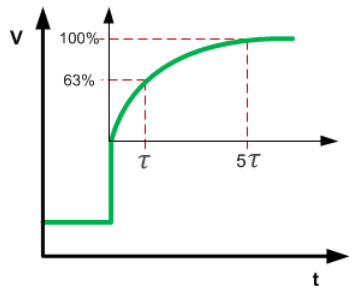

Where: $\tau = R \cdot C$

If the model simulates a detailed dynamic voltage drop with double layer (low time constant) and diffusion behavior (higher time constant), you can use an electro-chemical impedance spectroscopy (EIS) measurement to parameterize the model. The measurement points the complex impedance of the battery in the frequency response locus (Nyquist Plot). The following equation displays the complex impedance of the battery:

$$\underline{Z} = Re\{\underline{Z}\} + j\, Im\{\underline{Z}\} = |\underline{Z}|e^{j\,\varphi(\underline{Z})}$$

To find the resistance and capacitance values of the two RC circuits, you can use an optimization routine that verifies the RC values to get an match between simulation result and measurement. The following graphic shows an example of an EIS measurement:

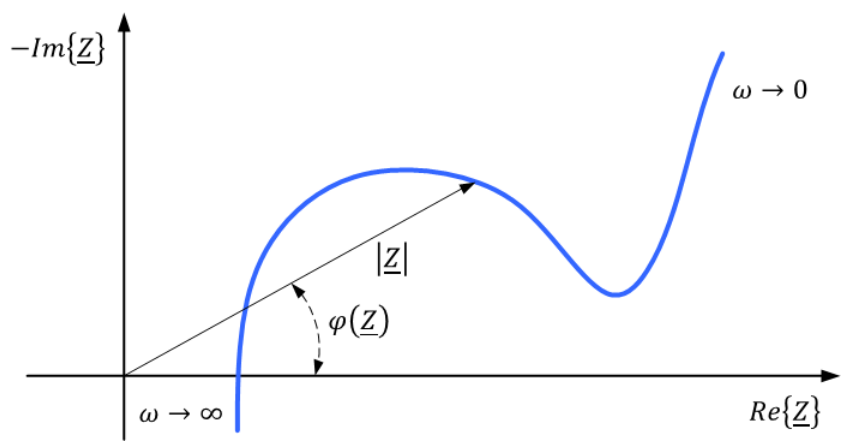

The following example parameterizations for different battery types are available:

- Lead-acid battery
- Nickel-metal hydride battery
- Lithium-ion battery

Lead-acid battery

- LeadAcid_AGM_89Ah: This absorbed glass (AGM) battery is a class of a valve-regulated lead-acid (VRLA) battery with a capacity of 89 Ah and an open-circuit voltage of 2.0 V. This technology represents a low-maintenance rechargeable battery with high power density and low internal resistance.

Nickel-metal hydride battery

- NiMH_0p8Ah: This parameterization represents a rechargeable nickel-metal hydride (NiMH) consumer battery with a capacity of 800 mAh and an open-circuit voltage of 1.2 V.
- NiMH_6p5Ah: This parameterization represents a rechargeable nickel-metal hydride (NiMH) battery with a capacity of 6.5 Ah and an open-circuit voltage of 1.2 V. This type of battery is often used in hybrid vehicle applications.

Lithium-ion battery

- LiIon_NMC_Polimer_HE_53Ah: This parameterization represents a high energy lithium-ion NMC polymer battery. The battery cell is based on lithium nickel manganese cobalt (NMC) cathodes and a graphite-based anode. It has a capacity of 53 Ah and an open-circuit voltage of 3.7 V. This type of battery is often used in hybrid and pure electric vehicle applications.
- LiIon_NMC_Polimer_HP_5Ah: This parameterization represents a high power lithium-ion NMC polymer battery. The battery cell is based on lithium nickel manganese cobalt (NMC) cathodes and a graphite-based anode. It has a capacity of 5 Ah and an open-circuit voltage of 3.65 V.
- LiIon_LFP_15Ah: This parameterization represents a lithium-iron-phosphate (LFP) battery cell with a capacity of 15 Ah and an open-circuit voltage of 3.3 V.
- LiIon_LTO_1Ah: This parameterization represents a lithium-titanate (LTO) battery with a capacity of 1 Ah and an open-circuit voltage of 2.52 V. This type of lithium-ion battery has an excellent life cycle and great safety characteristics but a lower specific energy and voltage than conventional lithium-ion batteries. LTO batteries are used in automotive electric applications.

Related topics

References

Battery Multicell (ModelDesk Parameterizing 🕮)
Battery Multicell V11 (ModelDesk Parameterizing 🕮)
History of the BATTERY_MULTICELL Block 513

Brake Control (Up to Version 2.0)

Description

In a conventional vehicle, the kinetic energy of the vehicle becomes thermal energy when the brake system decelerates the vehicle.

In a hybrid vehicle, the EM recovers a part of the kinetic energy and stores it in a battery. This is called *recuperation*. When used as a generator, the EM can only achieve modest to medium deceleration due to its limited power. A conventional brake is used additionally to decelerate more rapidly.

The clutch between the EM and the transmission is closed during recuperation. A full 100% traction between the transmission input shaft and the EM is assumed.

The hybrid manager uses the BRAKE_CONTROL block to monitor and coordinate the allocation of the requested braking force between the generator and the brake system.

In the model, there is a linear correlation between the position of the brake pedal and the requested braking force (setpoint). Based on the setpoint, the submodel uses the gear ratio, differential transmission, and tire radius to calculate the torque the generator has to apply to decelerate the vehicle with the same speed as with conventional brakes. The submodel uses the generator's actual torque to calculate the produced braking force, and compare it to the requested braking force (setpoint). Conventional brakes are used to compensate the difference between requested and actual braking force.

The following illustration shows a functional overview of the brake components.

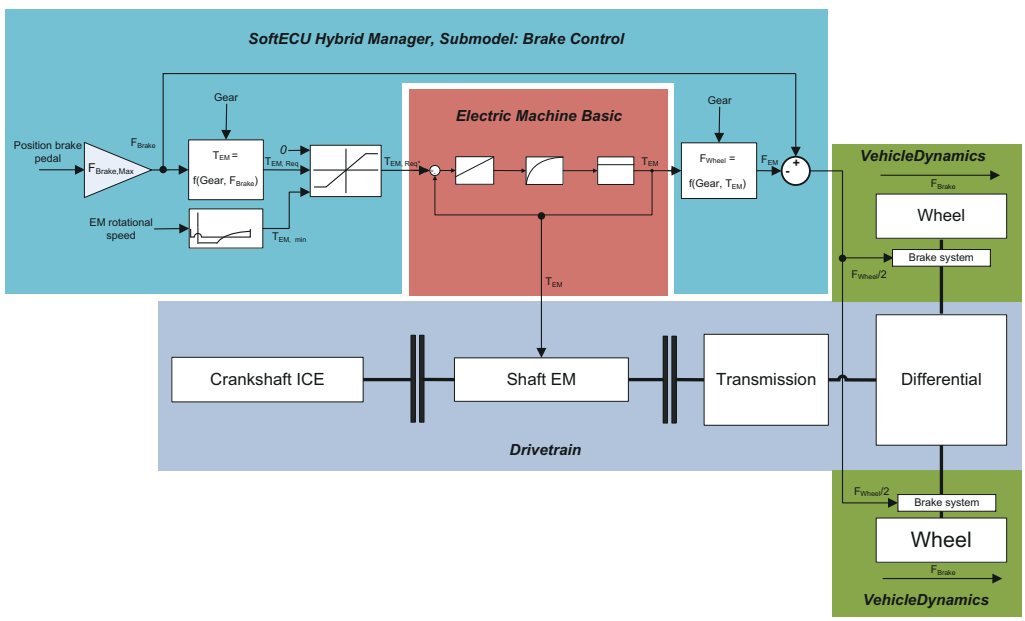

where:

$F_{Brake,Max}$	is the maximum braking force
$F_{Brake,Set}$	is the setpoint of the requested braking force
F_{Brake}	is the vehicle's braking force
$T_{EM,Req}$	is the requested torque of the EM
$T_{EM,Req*}$	is the limited requested torque of the EM
T_{EM}	is the actual torque of the EM
F_{EM}	is the braking force via the EM
$T_{EM,min}$	is the maximum generator torque for recuperation (brake energy recovery)

The relation between the torque at the transmission input shaft and the vehicle's braking force is calculated with: $T_{EM,Req} = f(Gear, F_{Wheel})$

The following formula applies this function for fixed gears. For the neutral gear position, $T_{EM,Req}$ is zero.

$$T_{EM,Req} = \frac{r_{Tire}}{i_{Trm}\, i_{Diff}} F_{Brake}$$

where:

r_{Tire}	is the tire radius
i_{Trm}	is the transmission ratio
i_{Diff}	is the differential ratio

The relation between the vehicle's braking force and the torque at the transmission input shaft is calculated with: $F_{Brake} = f(Gear, T_{EM})$

For neutral gear position, F_{Brake} is zero.

$$F_{Brake} = \frac{i_{Trm}\, i_{Diff}}{r_{Tire}} T_{EM}$$

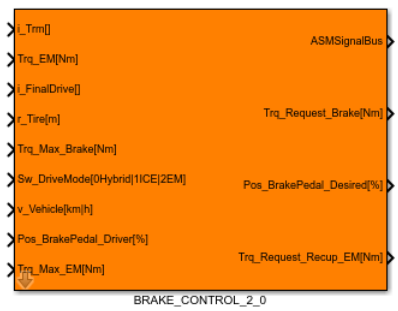

Inports

The following table shows the inports:

Name	Unit	Description
i_Trm	[]	Transmission ratio
i_FinalDrive	[]	Final drive ratio
Pos_BrakePedal_Driver	[%]	Brake pedal position
r_Tire	[m]	Tire radius
Sw_DriveMode	[0|1|2]	Drive mode ▪ 0: Hybrid ▪ 1: ICE only ▪ 2: EM only
Trq_EM	[Nm]	Current torque of electric machine
Trq_max_Brake	[Nm]	Maximum brake torque
Trq_Max_EM	[Nm]	Maximum torque of electric machine
v_Vehicle	[km/h]	Vehicle speed

Outports

The following table shows the outports:

Name	Unit	Description
ASMSignalBus	[]	Signal bus that contains signals of ASM components. Refer to ASMSignalBus (ASM User Guide 🕮).
Pos_BrakePedal_Desired	[%]	Desired position of brake pedal
Trq_Request_Brake	[Nm]	Brake torque request
Trq_Request_Recup_EM	[Nm]	Torque request recuperation of electric machine

Brake Control (Up to Version 4.0)

Description

A serial regenerative brake system consists of a hydraulic brake and an electric motor that works as a brake actuator. Both systems must be able to implement the braking torque as required by the driver and illustrate the blending of the electro-generator and the hydraulic brakes. The driver's desired braking force is captured by a brake pedal that is connected via x-by-wire.

The BRAKE_CONTROL block monitors and coordinates the allocation of the requested braking force between the generator (recuperation) and the brake system.

In the model, there is a linear correlation between the position of the brake pedal and the requested braking torque. Based on this requested brake torque, the model uses the gear ratio and differential transmission to calculate the torque that the generator has to apply to decelerate the vehicle with the same speed as with conventional hydraulic brakes. This torque is used as the requested setpoint for the EM. The BRAKE_CONTROL block also monitors the currently possible torque. The difference between the requested EM brake torque and the currently available EM brake torque is used as the brake torque that has to be set by the conventional hydraulic brake.

During an ESP or ABS intervention, the regenerative torque request is set to zero via the Sw_Recuperation inport.

If the battery state of charge reaches a value of 100%, the regenerative brake torque request is set to zero.

The following illustration shows the Simulink representation of the brake control:

Inports

The following table shows the inports:

Name	Unit	Description
Enable_Trq_Brake_Extern	[0|1|2]	Enable external brake torque request: ▪ 0: Off ▪ 1: Additional external brake torque ▪ 2: Exclusive external brake torque
i_FinalDrive	[]	Final drive ratio
i_Trm	[]	Transmission ratio
Pos_BrakePedal_Driver	[%]	Brake pedal position
SOC_Battery	[%]	Battery state of charge
Sw_DriveMode	[0|1|2]	Drive mode: ▪ 0: Hybrid ▪ 1: ICE only ▪ 2: EM only
Sw_Recuperation	[0|1]	Switch for recuperation: ▪ 0: Recuperation enabled ▪ 1: Recuperation disabled
Trq_Brake_Req_Extern	[Nm]	External brake torque request
Trq_EM	[Nm]	Current torque electric machine
Trq_Max_Brake	[Nm]	Maximum brake torque

Outports

The following table shows the outports:

Name	Unit	Description
ASMSignalBus	[]	Signal bus that contains signals of ASM components. Refer to ASMSignalBus (ASM User Guide 🕮).
Pos_BrakePedal_Desired	[%]	Desired position of brake pedal
Trq_Request_Brake	[Nm]	Brake torque request
Trq_Request_Recup_EM	[Nm]	Torque request recuperation of the electric machine

Related topics

References

History of the BRAKE_CONTROL Block..... 517

Brake Control BEV (Up to Version 2.0)

Description

A serial regenerative brake system consists of a hydraulic brake and an electric motor that works as a brake actuator. Both systems must be able to implement the braking torque as required by the driver and illustrate the blending of the electro-generator and the hydraulic brakes. The driver's desired braking force is captured by a brake pedal that is connected via x-by-wire.

The BRAKE_CONTROL_BEV block monitors and coordinates the allocation of the requested braking torque between the electric generator and the hydraulic brake system.

A linear correlation between the position of the brake pedal and the requested braking torque exists in the model. Based on this requested brake torque, the model uses the gear ratio and differential transmission to calculate the torque the generator has to apply to decelerate the vehicle at the same rate as with conventional hydraulic brakes. This torque is used as requested setpoint for the EM. The BRAKE_CONTROL_BEV block monitors the current possible brake torque that the EM is able to deliver in parallel. The difference between the requested EM brake torque and the currently available EM brake torque is used as brake torque that has to be set by the conventional hydraulic brake.

During an ESP or ABS intervention, the regenerative torque request is set to zero.

If the battery state of charge reaches a value of 100%, the regenerative brake torque request is set to zero via the Sw_Recuperation inport.

The following illustration shows the Simulink representation of the BRAKE_CONTROL_BEV block.

Inports

The following table shows the inports:

Name	Unit	Description
Enable_Trq_Brake_Extern	[0|1|2]	Enable external brake torque request: ▪ 0: Off ▪ 1: Additional external brake torque ▪ 2: Exclusive external brake torque
i_FinalDrive_Front	[]	Final drive ratio on the front
i_FinalDrive_Rear	[]	Final drive ratio on the rear
i_Trm_Front	[]	Transmission ratio on the front
i_Trm_Rear	[]	Transmission ratio on the rear
Pos_BrakePedal_Driver	[%]	Brake pedal position
Sw_Drivetrain_Mode	[1|2|3]	Drivetrain mode: ▪ 1: All wheel drive ▪ 2: Front wheel drive ▪ 3: Rear wheel drive
Sw_Recuperation	[0|1]	Switch for recuperation: ▪ 0: Recuperation enabled ▪ 1: Recuperation disabled
SOC_Battery	[%]	Battery state of charge
Sw_DriveMode	[0|1|2]	Drive mode: ▪ 0: Hybrid ▪ 1: ICE only ▪ 2: EM only

Name	Unit	Description
Trq_Brake_Req_Extern	[Nm]	External brake torque request
Trq_EM_Front	[Nm]	Current torque of the electric machine on the front
Trq_EM_Rear	[Nm]	Current torque of the electric machine on the rear
Trq_Max_Brake	[Nm]	Maximum brake torque

Outports

The following table shows the outports:

Name	Unit	Description
ASMSignalBus	[]	Signal bus that contains signals of ASM components. Refer to ASMSignalBus (ASM User Guide 🕮).
Trq_Request_Brake	[Nm]	Torque request for the hydraulic brake
Pos_BrakePedal_Desired	[%]	Brake pedal request hydraulic brake
Trq_Request_Recup_EM_Front	[Nm]	Recuperation torque for the front electric machine
Trq_Request_Recup_EM_Rear	[Nm]	Recuperation torque for the rear electric machine

Parameters

The following table shows the parameters:

Name	Unit	Description
Const_TrqDistributionFront	[0_1]	Brake torque distribution between the front and rear electric machine. A parameter between 0 and 1 defines the proportional torque distribution of the front electrical machine.

Related topics

References

Brake Control BEV 124

Starter (Up to Version 5.0)

Introduction

The starter is a battery-driven DC motor for gearing up an engine to speeds at which it has to be cranked.

Description

As the engine cranks and runs up to speed, it spins the shaft faster than the starter does. To prevent this, an overrunning clutch is installed between the pinion and armature shaft. This breaks the connection between them as soon as the engine "overtakes" the starter [Bos02].

The following illustration shows the Simulink representation of the STARTER_5_0 block.

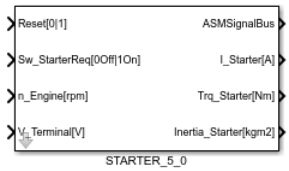

The starter is modeled as a DC motor with permanent magnets. The model consists of an armature circuit. A constant magnetic field induces a voltage in the armature circuit. The model calculates the starter current and torque depending on the terminal voltage, the inner resistance and the inductance of the armature circuit. To match the starter speed to the engine speed, the shafts are connected by a transmission.

A load reference-arrow system is used for the starter. The current flowing into the starter is positive.

The next illustration shows the equivalent circuit diagram of the model.

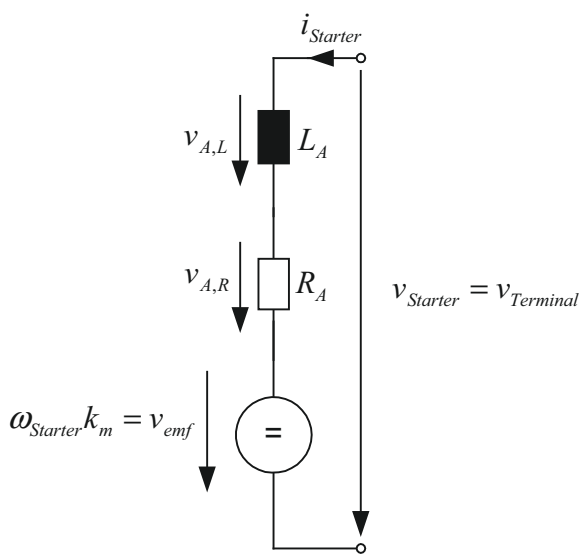

Mode of machine operation:

$v_{emf} = \omega_{Starter}\, k_m$

$Trq_{Starter} = i_{Starter}\, k_m$

Starter:

$$v_{Starter} = R_A\, i_{Starter} + L_A \frac{di_{Starter}}{dt} + v_{emf}$$

where:

$v_{Starter}$	is the starter armature voltage
$i_{Starter}$	is the starter armature current
$\mathrm{Trq}_{Starter}$	is the starter armature torque
R_A	is the armature resistance
L_A	is the armature inductance
$\omega_{Starter}$	is the rotational speed
k_m	is the machine constant

The next illustration shows the control diagram of the starter model.

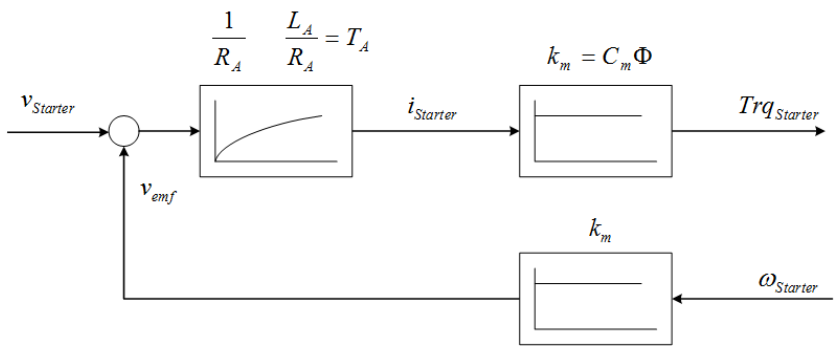

Assuming that the inductance is not used for calculating the starter torque and current, the following relationship between the starter speed and starter torque can be derived.

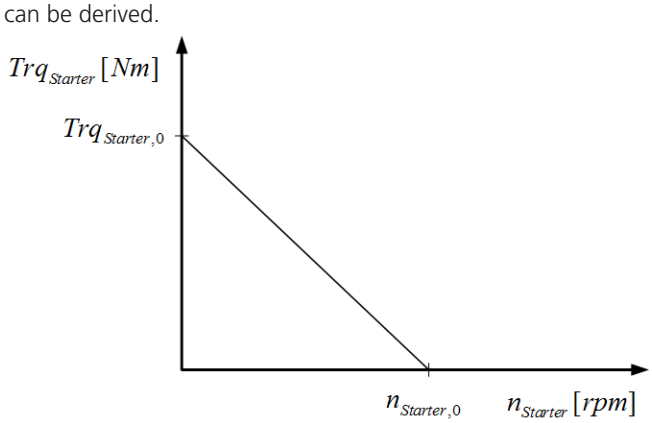

This relation results in the following two equations, which can be used to calculate the starter resistance $R_{Starter}$ and machine constant k_m from the desired maximum starter torque $\mathrm{Trq}_{Starter,0}$ and the maximum starter speed $n_{Starter,0}$.

$$R_{Starter} = \frac{V_{Bat,0}^2}{n_{Starter,0}\, Trq_{Starter,0}}$$

$$k_m = \frac{V_{Bat,0}}{n_{Starter,0}}$$

Note

These equations depend on the nominal battery terminal voltage $V_{Bat,0}$, which is typically around 14 V. For lower terminal voltage levels than to the nominal one, the starter model calculates less torque and less current than for the nominal state.

Inports

The following table shows the inports:

Name	Unit	Description
n_Engine	[rpm]	Engine speed
Reset	[0|1]	Reset
Sw_StarterReq	[0|1]	Switch starter request: ▪ 0: Starter off ▪ 1: Starter on
V_Terminal	[V]	Terminal voltage

Outports

The following table shows the outports:

Name	Unit	Description
ASMSignalBus	[]	Signal bus that contains signals of ASM components. Refer to ASMSignalBus (ASM User Guide 🕮).
I_Starter	[A]	Current
Inertia_Starter	[kg m^2]	Inertia
Trq_Starter	[Nm]	Torque

Parameter

The following table shows the block parameters:

Name	Unit	Description
Const_Inertia_Starter	[Nm/(rad/s)^2]	Inertia
Const_km_Starter	[]	Machine stator constant
Const_L_Starter	[H]	Armature inductance
Const_PolePairs	[]	Number of pole pairs
Const_R_Starter	[Ω]	Armature resistance
Const_TransmissionRatio	[]	Transmission ratio engine to stator speed
StepSize	[s]	Simulation step size

Related topics

References

Starter V5 (ModelDesk Parameterizing 🕮)

Three-Phase DCM Inverter (Up to Version 7.0)

Description

The THREE_PHASE_DCM_INVERTER block implements a three-phase power converter that consists of six power switches (IGBT and body diodes connected in a bridge configuration). A precise simulation considers natural switching effects, such as the free-wheeling diode, and changing energy flow such as passive energy recovery into battery.

A power switch drop-out can also be simulated to support a dynamic failure injection or a failure-dependent communication path simulation.

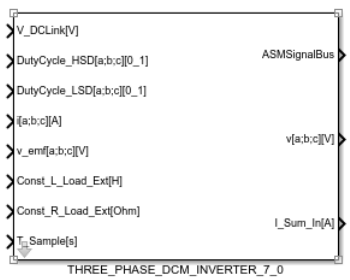

See the following illustration:

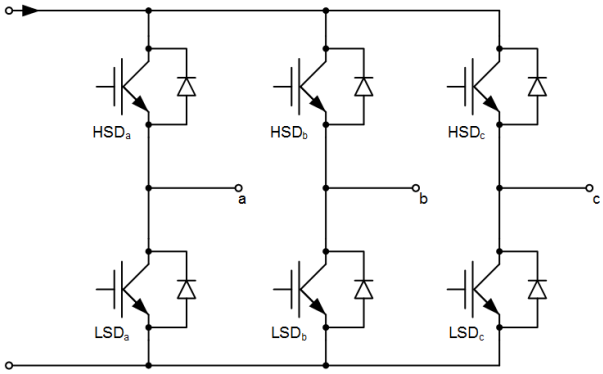

The following illustration shows the simplified switch model:

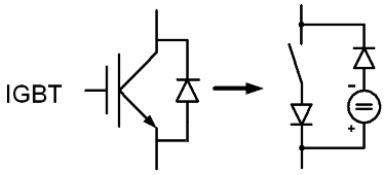

In this model, the average voltage can be calculated for different gate levels and current directions according to the following look-up table:

	$i_x > 0$	$i_x < 0$
HSD on (tHSD)	v_{DC}	$v_{DC} + v_{fd}$
LSD on (tLSD)	$-v_{fd}$	0
Neither (td)	$-v_{fd}$	$v_{DC} + v_{fd}$

The following illustrations shows the wave form of the voltage for an IGBT-based inverter leg, first for a positive current, then for a negative current.

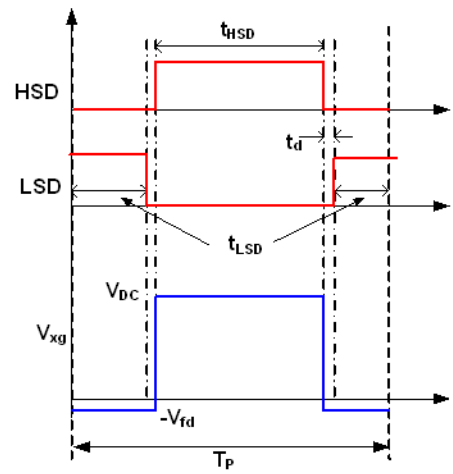

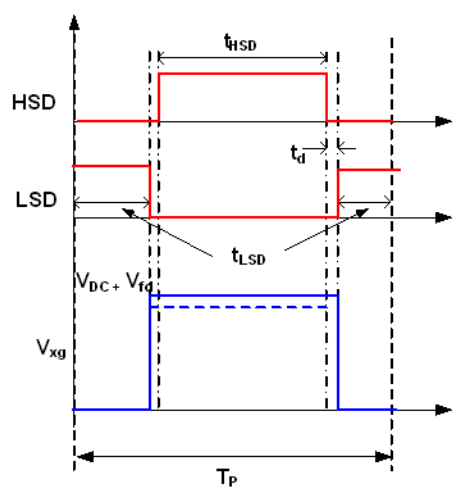

The instantaneous gate signals are ignored in the model. Instead, the average gate timing is measured via a fast PWM measurement board such as the DS5202 FPGA-based PWM measurement board. These times (t_{HSD} and t_{LSD}) are used to calculate the average value of the voltage. The voltage loss generated by the on-state resistance is subtracted from the average voltage.

$$i > 0 \qquad v_x = \frac{1}{T_P}[t_{HSD}\, v_{DC} + (1 - t_{HSD})(-v_d) - t_{HSD}\, i_x\, R_{OnState}]$$

$$i < 0 \qquad v_x = \frac{1}{T_P}[(1 - t_{LSD})(v_{DC} + v_d) - t_{HSD}\, i_x\, R_{OnState}]$$

The inverter model is able to simulate the discontinuous conduction mode of a three-phase electrical load. A discontinuous conduction can be caused by turning off all power switches or diode conductions of a half bridge. To exactly model the discontinuous mode, the currents in phases a, b, and c are calculated by three observers, one for each phase. The calculation of the phase currents can be preformed by using a simple model of the connected load. See the following illustration:

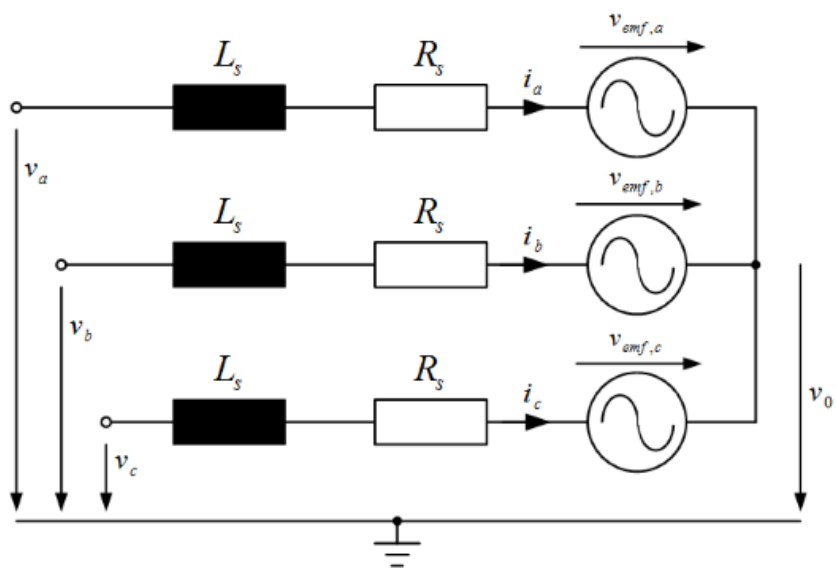

The phase current in the next sampling step can be predicted based on the following equation with the inductance and the resistance of the connected load.

$$i_x(k+1) = i_x(k-1) + \frac{T_{Sample}}{L_s}\left[v_x(k) - R_s\, i_x(k-1) - v_{emf,x}(k-1) - v_0 (k-1)\right]$$

$with\ x = a, b, c$

$v_{emf,x}(k-1)$ and $i_x\,(k-1)$ are the feedback EMF voltages and phase currents of the connected machine. $v_0(k-1)$ is determined by the observers. To hide algebraic loops in the model implementation, these values must be taken from the last sampling step$(k-1)$.

$v_x(k)$ describes the phase output voltage of the three-phase power converter. This voltage depends on the driver duty cycle and the direction of the load currents.

The three-phase DCM inverter with observers allows a correct description of body diode conduction, so that the discontinuous conduction mode can be accurately detected. If the discontinuous conduction mode occurs, the voltage is

adjusted so that the phase current is zero in the next sampling step. In this case, the adjusted voltages are applied as converter output voltages.

The following illustration displays the principle of operation of the three-phase DCM inverter.

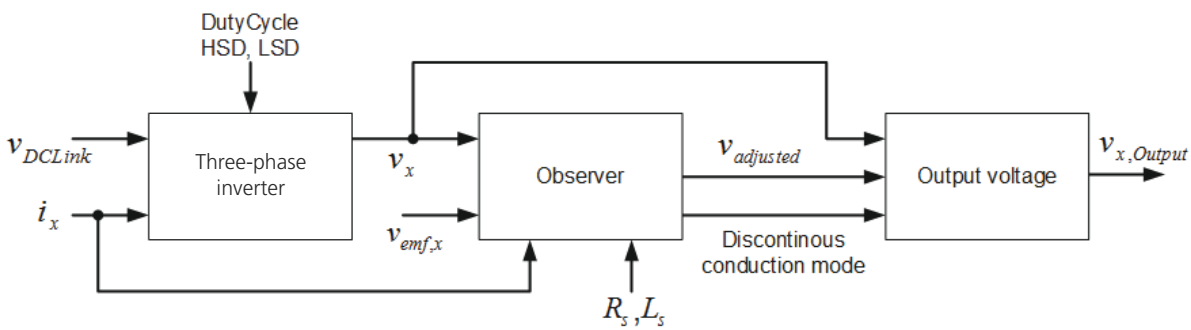

The three-phase DCM inverter can also simulate the operation of a three-phase load with missing driver signals of the power switches (e.g., for HSDa and LSDa). To simulate this type of failure, the corresponding duty cycles must be set to zero.

This configuration can also be applied to switches in phases b and c. The following figure shows the configuration a of duty cycle vector if switches HSDa, LSDb, and HSDc are not driven.

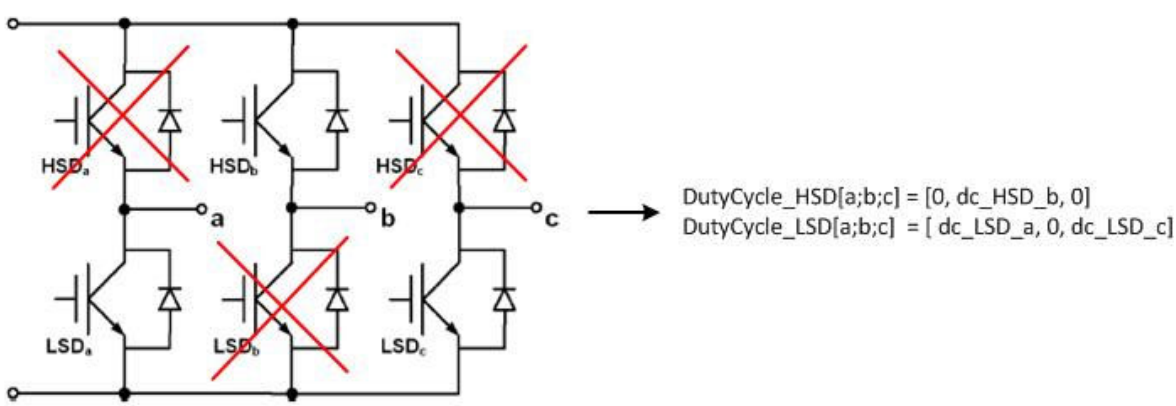

Because of the missing driver signals for the switches HSDa, LSDb, and HSDc, the phase currents become discontinuous. In phases a and c, there are only negative currents. In phase b, a positive current is created.

Inports

The following table shows the inports:

Name	Unit	Description
Const_L_Load_Ext	[H]	External load inductance (e.g., electric machine)
Const_R_Load_Ext	[Ω]	External load resistance (e.g., electric machine)
DutyCycle_HSD[a;b;c]	[0_1]	Duty cycle of the high-side driver (phases a;b;c)

Name	Unit	Description
DutyCycle_LSD[a;b;c]	[0_1]	Duty cycle of the low-side driver (phases a;b;c)
i[a;b;c]	[A]	Line currents of the connected motor (load)
T_Sample	[s]	Sample time
V_DCLink	[V]	Input of DC link voltage
v_emf[a;b;c]	[V]	EMF voltages of the connected machine (load)

Outports

The following table shows the outports:

Name	Unit	Description
ASMSignalBus	[]	Signal bus that contains signals of ASM components. Refer to ASMSignalBus (ASM User Guide 🕮).
I_Sum_In	[A]	Three-phase inverter bridge current drain
v[a;b;c]	[V]	Calculated supply voltages

Parameters

The following table shows the parameters:

Name	Unit	Description
Const_I_Sw_min	[A]	The minimum current flows in the switch. If the current is lower than this threshold, it is treated as zero
Const_L_Load	[H]	Stator inductance of the connected machine
Const_R_Load	[Ω]	Stator resistance of the connected machine
Const_R_OffState	[Ω]	On-state resistance of body diodes
Const_R_OnState	[Ω]	On-state resistance of IGBTs
Const_Vf_Diode	[V]	Absolute value of the diode forward voltage drop
Sw_Load	[0|1]	Switch for load source: ▪ 0: Intern (block parameter) ▪ 1: Extern (block inport)

Related topics

References

Three Phase DCM Inverter V7 (ModelDesk Parameterizing 🕮)

Torque Request Coordination BEV (Up to Version 4.0)

Description

The requested drive torque is one of the most important input values for the drive management. The TRQ_REQUEST_COORDINATION_BEV block coordinates the torque requests, for example, from the accelerator pedal, the recuperation, or external components like the ACC, for the electric machines of the battery electric vehicle (BEV). The positions of the brake and accelerator pedals set the requested torque.

- If the position of the brake pedal is greater than zero percent, the position of the accelerator pedal is neglected. The TRQ_REQUEST_COORDINATION_BEV block transmits the brake torque to the electric machine for recuperation.
- If the brake pedal is in its default position, the driver's requested torque depends on the accelerator pedal. The relation of the accelerator pedal and the maximum EM torque is used to calculate the driver's requested torque.

The following illustration shows the Simulink representation of the torque request coordination:

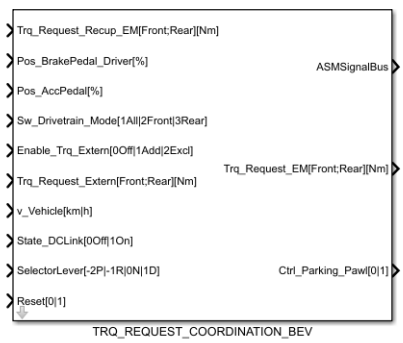

Inports

The following table shows the inports:

Name	Unit	Description
Enable_Trq_Extern	[0|1|2]	Enable external torque request (e.g., from ACC): ▪ 0: Off ▪ 1: External torque request is added to the torque request from the accelerator pedal ▪ 2: External torque request is used as the exclusive torque and the accelerator pedal torque request is neglected
Pos_AccPedal	[%]	Accelerator pedal position
Pos_BrakePedal_Driver	[%]	Brake pedal position
Reset	[0|1]	Reset
SelectorLever	[-2|-1|0|1]	Selector lever position to set the drive mode: ▪ -2: Park, torque request is set to zero and parking pawl is activated ▪ -1: Reverse

Name	Unit	Description
		▪ 0: Neutral, torque request is set to zero ▪ 1: Drive, torque request is set
State_DCLink	[0|1]	Switch to set torque requests to zero if DC link is not active: ▪ 0: DC link is off, torque requests are set to zero. ▪ 1: DC link is active, torque requests are set.
Sw_Drivetrain_Mode	[1|2|3]	Drivetrain mode: ▪ 1: All wheel drive ▪ 2: Front wheel drive ▪ 3: Rear wheel drive
Trq_Request_Extern	[Nm]	External torque request
Trq_Request_Recup_EM[Front;Rear]	[Nm]	Recuperation torque request electric machine front and rear

Outports

The following table shows the outports:

Name	Unit	Description
ASMSignalBus	[]	Signal bus that contains signals of ASM components. Refer to ASMSignalBus (ASM User Guide 🕮).
Ctrl_Parking_Pawl	[0|1]	Switch for parking pawl control: ▪ 0: Off ▪ 1: On
Trq_Request_EM[Front;Rear]	[Nm]	Torque request for the front and rear electric machine

Parameters

The following table shows the parameters:

Name	Unit	Description
Const_Trq_Max_EM_Front	[Nm]	Maximum torque for the front electric machine
Const_Trq_Max_EM_Rear	[Nm]	Maximum torque for the rear electric machine
Map_Factor_Trq_Max_EM_Front	[]	Factor torque max EM front = f(Pos_AccPedal[%]) This factor multiplied with the maximum torque of the electric machine front supplies the resulting electric machine front torque request.
Map_Factor_Trq_Max_EM_Rear	[]	Factor torque max EM rear = f(Pos_AccPedal[%]) This factor multiplied with the maximum torque of the electric machine rear supplies the resulting electric machine rear torque request.
Map_Pos_AccPedal_Start	[%]	Additional start accelerator pedal position depending on the vehicle velocity.

Related topics

References

Torque Request Coordination BEV (ModelDesk Parameterizing 🕮)

New Features/Migration History of the ASM Electric Components Blockset

Introduction

The following topics provide an overview of the changes to the ASM products in the previous Releases.

For an overview of the new features and migration of the current Release, refer to Automotive Simulation Models (ASM) (New Features and Migration 🕮).

Where to go from here

Information in this section

General Changes to the ASM Electric Components Blockset..... 504
Provides an overview of the new features and migration of the ASM blockset in the previous Releases.

History of the AIR_CHANNEL Block..... 507
Provides an overview of all the new features and migration of the ASM block in the previous Releases.

History of the ALTERNATOR Block..... 508
Provides an overview of all the new features and migration of the ASM block in the previous Releases.

History of the ASM_EC_ROUTING Block..... 508
Provides an overview of all the new features and migration of the ASM block in the previous Releases.

History of the ASM_EC_STARDELTA Block..... 509
Provides an overview of all the new features and migration of the ASM block in the previous Releases.

History of the BATTERY Block..... 509
Provides an overview of all the new features and migration of the ASM block in the previous Releases.

History of the BATTERY_CELL Block.....512
Provides an overview of all the new features and migration of the ASM block in the previous Releases.

History of the BATTERY_MULTICELL Block.....513
Provides an overview of all the new features and migration of the ASM block in the previous Releases.

History of the BATTERY_THERMAL Block.....515
Provides an overview of all the new features and migration of the ASM block in the previous Releases.

History of the BLDC_CONTROLLER Block.....516
Provides an overview of all the new features and migration of the ASM block in the previous Releases.

History of the BLDC_CONTROLLER_BASIC Block.....516
Provides an overview of all the new features and migration of the ASM block in the previous Releases.

History of the Block_Modulator Block.....517
Provides an overview of all the new features and migration of the ASM block in the previous Releases.

History of the BRAKE_CONTROL Block.....517
Provides an overview of all the new features and migration of the ASM block in the previous Releases.

History of the BRAKE_CONTROL_BEV Block.....518
Provides an overview of all the new features and migration of the ASM block in the previous Releases.

History of the BRUSHLESS_DC_MACHINE_ALPHA_BETA Block.....518
Provides an overview of all the new features and migration of the ASM block in the previous Releases.

History of the COMPRESSOR Block.....519
Provides an overview of all the new features and migration of the ASM block in the previous Releases.

History of the DC_LINK Block.....519
Provides an overview of all the new features and migration of the ASM block in the previous Releases.

History of the DC_MACHINE Block.....520
Provides an overview of all the new features and migration of the ASM block in the previous Releases.

History of the DUTYCYCLES_ROUTING Block.....520
Provides an overview of all the new features and migration of the ASM block in the previous Releases.

History of the ELECTRIC_MACHINE_BASIC Block.....520
Provides an overview of all the new features and migration of the ASM block in the previous Releases.

History of the ENGINE_INERTIA Block..... 521
Provides an overview of all the new features and migration of the ASM block in the previous Releases.

History of the ENGINE_POSITION Block..... 521
Provides an overview of all the new features and migration of the ASM block in the previous Releases.

History of the HALF_BRIDGE_INVERTER Block..... 522
Provides an overview of all the new features and migration of the ASM block in the previous Releases.

History of the HALL_ENCODER Block..... 523
Provides an overview of all the new features and migration of the ASM block in the previous Releases.

History of the KEY_SIGNALS_ICE Block..... 523
Provides an overview of all the new features and migration of the ASM block in the previous Releases.

History of the LIGHTING_SYSTEM Block..... 523
Provides an overview of all the new features and migration of the ASM block in the previous Releases.

History of the PARALLEL_CIRCUIT_CURRENT_SPLIT Block..... 524
Provides an overview of all the new features and migration of the ASM block in the previous Releases.

History of the PERMANENT_MAGNET_SYNCHRONOUS_MACHINE_D_Q Block..... 524
Provides an overview of all the new features and migration of the ASM block in the previous Releases.

History of the PI_CONTROLLER Block..... 525
Provides an overview of all the new features and migration of the ASM block in the previous Releases.

History of the PI_CONTROLLER_EXT_SATURATION Block..... 525
Provides an overview of all the new features and migration of the ASM block in the previous Releases.

History of the PMSM_CONTROLLER Block..... 525
Provides an overview of all the new features and migration of the ASM block in the previous Releases.

History of the PMSM_CONTROLLER_BASIC Block..... 526
Provides an overview of all the new features and migration of the ASM block in the previous Releases.

History of the PMSM_CONTROLLER_THREE_LEVEL Block..... 526
Provides an overview of all the new features and migration of the ASM block in the previous Releases.

History of the PMSM_D_Q_NONLINEAR Block..... 527
Provides an overview of all the new features and migration of the ASM block in the previous Releases.

History of the POTENTIOMETER Block..... 528
Provides an overview of all the new features and migration of the ASM block in the previous Releases.

History of the PTC_GRID_DEFROSTER Block..... 528
Provides an overview of all the new features and migration of the ASM block in the previous Releases.

History of the RC_BATTERY Block..... 528
Provides an overview of all the new features and migration of the ASM block in the previous Releases.

History of the RC_LOAD_SERIES Block..... 529
Provides an overview of all the new features and migration of the ASM block in the previous Releases.

History of the RL_LOAD_PARALLEL Block..... 529
Provides an overview of all the new features and migration of the ASM block in the previous Releases.

History of the RL_LOAD_SERIES Block..... 530
Provides an overview of all the new features and migration of the ASM block in the previous Releases.

History of the RLC_LOAD_PARALLEL Block..... 530
Provides an overview of all the new features and migration of the ASM block in the previous Releases.

History of the RLC_LOAD_SERIES Block..... 530
Provides an overview of all the new features and migration of the ASM block in the previous Releases.

History of the SCIM_CONTROLLER Block..... 530
Provides an overview of all the new features and migration of the ASM block in the previous Releases.

History of the SCIM_CONTROLLER_BASIC Block..... 531
Provides an overview of all the new features and migration of the ASM block in the previous Releases.

History of the SEPARATELY_EXCITED_DC_MACHINE Block..... 531
Provides an overview of all the new features and migration of the ASM block in the previous Releases.

History of the SIGNALS_ROUTING Block..... 532
Provides an overview of all the new features and migration of the ASM block in the previous Releases.

History of the SOFT_ECU_EV_CHARGE_CONTROLLER Block..... 532
Provides an overview of all the new features and migration of the ASM block in the previous Releases.

History of the SOFT_ECU_CHARGING_STATION Block..... 533
Provides an overview of all the new features and migration of the ASM block in the previous Releases.

History of the SoftECU_Hybrid_Manager Block..... 533
Provides an overview of all the new features and migration of the ASM block in the previous Releases.

History of the SPACE_VECTOR_MODULATOR Block..... 534
Provides an overview of all the new features and migration of the ASM block in the previous Releases.

History of the SQUIRREL_CAGE_ASYNCHRONOUS_MACHINE_D_Q Block..... 534
Provides an overview of all the new features and migration of the ASM block in the previous Releases.

History of the STARTER Block..... 535
Provides an overview of all the new features and migration of the ASM block in the previous Releases.

History of the STARTER_ICE Block..... 535
Provides an overview of all the new features and migration of the ASM block in the previous Releases.

History of the SUPERCAPACITOR Block..... 536
Provides an overview of all the new features and migration of the ASM block in the previous Releases.

History of the THREE_LEVEL_HALF_BRIDGE_INVERTER Block..... 536
Provides an overview of all the new features and migration of the ASM block in the previous Releases.

History of the THREE_LEVEL_SPACE_VECTOR_MODULATOR Block..... 537
Provides an overview of all the new features and migration of the ASM block in the previous Releases.

History of the THREE_LEVEL_THREE_PHASE_INVERTER Block..... 537
Provides an overview of all the new features and migration of the ASM block in the previous Releases.

History of the THREE_PHASE_DCM_INVERTER Block..... 537
Provides an overview of all the new features and migration of the ASM block in the previous Releases.

History of the THREE_PHASE_INVERTER Block..... 538
Provides an overview of all the new features and migration of the ASM block in the previous Releases.

History of the THREE_PHASE_POWERSUPPLY Block..... 539
Provides an overview of all the new features and migration of the ASM block in the previous Releases.

History of the THREE_PHASE_RECTIFIER Block..... 539
Provides an overview of all the new features and migration of the ASM block in the previous Releases.

History of the TRQ_REQUEST_COORDINATION Block..... 540
Provides an overview of all the new features and migration of the ASM block in the previous Releases.

History of the TRQ_REQUEST_COORDINATON_BEV Block..... 540
Provides an overview of all the new features and migration of the ASM block in the previous Releases.

History of the Electric Components Demo Models..... 541
Provides an overview of the new features and migration of the ASM demo model in the previous Releases.

General Changes to the ASM Electric Components Blockset

Release 2019-A

There is now an Operator version of the ASM Electric Components Library.

The Operator version is available for hybrid applications (Vehicle Dynamics Hybrid and Engine Gasoline Hybrid) and battery electric vehicle applications.

The library contains models that offer the same functionality, simulation quality, and parameterization options as the standard simulation package (Developer version).

Release 2016-B

Look-up table migration The discontinued Simulink blocks Lookup and Lookup2D in the ASM library blocks were updated to the new standard Simulink Look-up table (n-D) block. Refer to Changes to all ASM Products (ASM User Guide 🕮).

The look-up tables were updated in the following blocks within this library:

- ALTERNATOR, ALTERNATOR_2_0
- BATTERY, BATTERY_4_0
- BATTERY_CELL
- BATTERY_MULTICELL, BATTERY_MULTICELL_2_0
- BATTERY_THERMAL
- BRUSHLESS_DC_MACHINE_ALPHA_BETA
- COMPRESSOR
- CURRENT_SINK
- DC_MACHINE, DC_MACHINE_1_0
- DRIVE_MANAGEMENT
- FAN
- PERMANENT_MAGNET_SYNCHRONOUS_MACHINE_D_Q
- POTENTIOMETER
- PTC_GRID_DEFROSTER
- PTC_HEATER
- SOFT_ECU_HYBRID_MANAGER_1_0

- STARTER, STARTER_2_0
- TRQ_REQUEST_COORDINATION

License check of ASM Utils blocks The ASM_UTILS license was discontinued. The ASM Utils blocks now check the license of the ASM blockset in which they are used.

The Utils blocks in the following blocks within this library were updated:

- BATTERY_CELL
- BATTERY_MULTICELL, BATTERY_MULTICELL_2_0
- PMSM_D_Q_NONLINEAR

Release 2016-A

Scope handling During migration, all disabled scopes within the model need to be restored to ensure that the model works properly, including the new scope handling procedure. You might have to disable these scopes again after migration. You can easily disable scopes via the Scope Handling GUI button provided by ASM. This makes direct use of the commenting feature in Simulink.

Signal modification For several blocks, all inport and outport bus signals have been changed to vector signals. The automatic migration adds a subsystem to the affected outports to reverse the vector back to the former bus signal.

This applies to the following blocks:

- BLOCK_MODULATOR
- BLDC_CONTROLLER
- BLDC_CONTROLLER_BASIC
- THREE_PHASE_INVERTER
- BRUSHLESS_DC_MACHINE_ALPHA_BETA
- PMSM_CONTROLLER_BASIC
- PMSM_CONTROLLER
- PMSM_D_Q_NONLINEAR
- PERMANENT_MAGNET_SYNCHRONOUS_MACHINE_D_Q
- THREE_LEVEL_THREE_PHASE_INVERTER
- THREE_LEVEL_SPACE_VECTOR_MODULATOR
- SCIM_CONTROLLER_BASIC
- SQUIRREL_CAGE_ASYNCHRONOUS_MACHINE_D_Q
- THREE_PHASE_DCM_INVERTER
- THREE_LEVEL_HALF_BRIDGE_INVERTER
- HALF_BRIDGE_INVERTER
- HALL_ENCODER

Release 2015-B

Renamed inports and outports There are changes in the names of inports and outports:

- v_Stator[a;b;c][V] is renamed to v[a;b;c][V]
- i_Stator[a;b;c][V] to i[a;b;c][V]

This applies to the following blocks:

- PMSM_D_Q_NONLINEAR
- BRUSHLESS_DC_MACHINE_ALPHA_BETA
- PMSM_MAGNET_SYNCHRONOUS_MACHINE_D_Q
- SQUIRREL_CAGE_ASYNCHRONOUS_MACHINE_D_Q
- PMSM_CONTROLLER
- PMSM_CONTROLLER_BASIC
- PMSM_CONTROLLER_THREE_LEVEL
- SCIM_CONTROLLER
- SCIM_CONTROLLER_BASIC
- THREE_PHASE_INVERTER
- THREE_LEVEL_THREE_PHASE_INVERTER
- THREE_PHASE_DCM_INVERTER

Renamed inports The v_Stator[a;b;c][V] inport is renamed to v[a;b;c][V].

This applies to the following blocks:

- SPACE_VECTOR_MODULATOR
- THREE_LEVEL_SPACE_ VECTOR_MODULATOR

The i_Stator[a;b;c][V] inport is renamed to i[a;b;c][V].

This applies to the following blocks:

- BLDC_CONTROLLER
- BLDC_CONTROLLER_BASIC

Release 2015-A

Hybrid vehicle demos There are two new demo models for simulating parallel hybrid drivetrain structures:

- Vehicle Dynamics Hybrid
- Engine Gasoline Hybrid

These models contain components for modifying standard automotive drivetrains and simulate mechanical and electric components, such as clutches, electric machines, and the battery.

The **Vehicle Dynamics Hybrid** model simulates the dynamics of a passenger car. The vehicle is composed of an engine, electric components, a rigid parallel hybrid drivetrain, a rigid vehicle body, and four wheels. The model represents the vehicle's longitudinal, lateral, and vertical dynamics and provides a detailed simulation of a rigid parallel hybrid drivetrain, suspension kinematics and compliance, tire-road friction forces and moments, steering, and brakes. The combustion process in the engine is not modeled.

The **Engine Gasoline Hybrid** model is a Simulink model used to simulate turbocharged gasoline engines with manifold or direct injection in combination with electric components and a parallel hybrid drivetrain model, including automatic transmission.

To enable the simulation of state-of-the-art hybrid modes such as electric driving, power boost or recuperation, both demo models include a soft ECU for hybrid powertrain management.

Note

To run the Vehicle Dynamics Hybrid demo model, you must use the ASM Electric Components Library in combination with the ASM Vehicle Dynamics Library and the ASM Environment Library.
To run the Engine Gasoline Hybrid demo model, you must use the ASM Electric Components Library in combination with the ASM Engine Gasoline Library and the ASM Drivetrain Basic Library. Otherwise some Simulink blocks of the demo model contain bad links to the missing libraries.

AirConditioning The modeled air conditioning system consists of electric components, such as a compressor and fan driven by an electric motor, and thermal interior model components, such as the refrigerant circuit, air duct, and cabin. The system also includes a soft ECU Air conditioning model, which regulates the cabin temperature.

The model simulates the air conditioning system of an electric vehicle in which the compressor and fan are driven electrically.

The model of the thermal interior is used to determine the average temperature in the vehicle cabin. This value depends on the ambient temperature, the manipulation via the air conditioning system, the fan, and the vehicle's material parameters.

ControlDesk experiments ControlDesk projects are available for all six ASM Electric Components demos. The layouts include graphics, which give an overview of the components used in the demo models. Detailed information and simulation results of the components are also provided.

Release 6.2

This blockset is new. The ASM Electric Components Library includes modules such as machines, loads and power electronics to simulate the electric circuits of an automotive system. It is divided into two basic parts: One subsystem with model components to simulate the Automotive Electrical System and one subsystem with models for Electric Components Closed Loop applications such as testing a real machine controller in an HIL system.

History of the AIR_CHANNEL Block

Release 2018-B

The new SIM.StepSize parameter has been added for the sample time of the discrete integrator instead of a fixed numerical value.

Related topics

References

Air Channel 201

History of the ALTERNATOR Block

Release 2020-B	The I_Terminal[A] signal was added to the ASMSignalBus.
Release 2018-B	The exciter voltage and the armature current have been limited. The RL_System_Select block has been updated.
Release 2015-B	The block has a new outport for the execution current: I_Excitation.
Release 7.3	The pole pairs dependency of the induced EMF voltage has been added so that the model's behavior is changed. Because migration cannot be done automatically, the link to the DC machine library is changed to the former implementation (FormerVersion/ALTERNATOR_2_0 subsystem) during the migration of older ASM models. Thus, the simulation behavior is not changed. If you want to use the new engine basic implementation, drag the ALTERNATOR block from the ASM_ElectricComponents_lib Simulink library to your model and adapt the inports, outports and parameters to your needs.
Release 7.0	Internal block adaptations have been performed without any functional changes.
Related topics	References Alternator 168

History of the ASM_EC_ROUTING Block

Release 2017-A	This block is new. It can change the phase order for three-phase systems.
Related topics	References Phase Arrangement 163

History of the ASM_EC_STARDELTA Block

Release 2015-B

This block is new. It is used for current (or voltage) conversion from three-phase supply variables to three-phase machine variables, and in the other direction.

Related topics

References

Current or Voltage Conversion of Three-Phase Systems..... 153

History of the BATTERY Block

Release 2020-B

There were some internal adaptations. These have no effect on the simulation result or functionality of the component.

Release 2019-A

The model structure and the parameterization of the battery model were changed:

- The capacity of the cells is now set as the difference from the reference cell capacity and no longer as an absolute value.
- The unit of temperature parameters was changed from *Kelvin* to *degree Celsius*.
- The table of internal resistance was changed from SOC and current dependency to SOC and temperature dependency.
- The table that sets an internal resistance factor as a function of the temperature was removed and replaced by a new current-dependent table.
- The linear temperature dependency of the battery capacity was replaced by a table parameter.

Because of these changes, parameters cannot be migrated automatically.

During migration, the link to the BATTERY library is changed to the former version BATTERY_13_0 subsystem. Thus, the simulation behavior is not changed. To use the new implementation, drag the BATTERY block from the ASM Electric Components Library to your model and adapt the inports, outports, and parameters to your requirements.

Release 2018-B

The calculation of the thermal loss reaction power was corrected to avoid a long-term battery temperature drift.

Release 2017-A

Heat generation according to the chemical battery main reaction and the loss reaction, e.g., gassing effects, must be calculated for each cell of the battery

	pack. For this, a multiplication of these two thermal powers with the number of cells was added.
Release 2016-B	The model includes example parameterizations for different battery types and technologies like lead-acid, NiMH and lithium-ion (NMC, LFP, LTO) batteries.
Release 2013-B	New signals (e.g., power signals) have been added to the ASMSignalBus.
Release 2013-A	New outports to support battery parallel circuit connection have been added: ▪ Electromotive voltage ▪ Voltage loss ▪ Resistance
Release 7.4	The Goto-From blocks have been replaced with signal lines in the **ASMSignalBus**. This solves a problem with multiple instances of the battery block.
Release 7.3	The state of health (SOH) functionality has been added.
Release 7.0	The diffusion behavior is simulated by an additional RC circuit. To simulate the voltage loss behavior of the battery, the resistance of the model is parameterized via a look-up table which depends on the charge state and the battery current. All the parameter values for the different resistances, the inductance and capacitances must be parameterized for one battery cell. The loss current, the inductance, the double layer and the diffusion behavior can be enabled or disabled via a switch. If you want to change back to the former battery implementation, you can find the former block at subsystem **Accumulator/FormerVersions** in the **ASM_ElectricComponents_lib** library. Just drag the former block to your Simulink model. As the new implementation of the battery model changed a lot and parameters cannot be migrated automatically, the link to the battery library is changed to the former implementation (**FormerVersion/BATTERY_4_0** subsystem) during the migration of older ASM models. Thus, the simulation behavior is not changed. If you want to use the new battery implementation, just drag the **BATTERY** block from the **ASM_ElectricComponent_lib** Simulink library to your model and adapt the new parameters to your needs.

Release 6.5

The effect of current loss in the thermal model and the terminal voltage model have been modified.

Release 6.4

Thermal power can now be set from an external source.

The State-of-Charge model (SOC) can now be set initially and reset from an external source during simulation.

Release 6.3

Some mask parameters were renamed and removed.

Renamed parameters

Old Parameter Name	New Parameter Name
Map_soc_CellFactor	Map_Factor_CellVoltage
Const_C_Block_nom	Const_Capacity_nom
Map_Kn_current_temp	Map_Factor_Capacity
Const_Number_of_Cells	Const_n_Cells
Const_mbat	Const_m_Batt
Const_thermalCapacity	Const_Capacity_Thermal
Map_R_Batt_Temp_Discharge	Map_R_Discharge
Const_Lbat_Discharge	Const_L_Discharge
Map_R_Batt_Temp_Charge	Map_R_Charge
Const_Lbat_Charge	Const_L_Charge
Const_Tn	Const_Temp_nom
Const_I0	Const_I_Loss_nom
Const_A_surface	Const_A_Surface
Const_eps	Const_Factor_ThermalEmission
Const_cMr	Const_c_MainReaction

The renamed parameters are not changed in the initialization M file (`Simulation.current\_AutomotiveElectricalSystem\IniFiles\asm_automotiveelectricalsystem_ini.m` or `Simulation.current\_ElectricDriveFullHybrid\IniFiles\asm_electricdriveclosedloop_ini.m`)

automatically. The values of the renamed parameters are therefore not initialized during the initialization procedure. To update the initialization, set the new parameter names in the initialization M file manually. Replace the following strings in the initialization M file:

`Map_soc_CellFactor` rename as `Map_Factor_CellVoltage`

`Const_C_Block_nom` rename as `Const_Capacity_nom`

`Map_Kn_current_temp` rename as `Map_Factor_Capacity`

`Const_Number_of_Cells` rename as `Const_n_Cells`

`Const_mbat` rename as `Const_m_Batt`

`Const_thermalCapacity` rename as `Const_Capacity_Thermal`

`Map_R_Batt_Temp_Discharge` rename as `Map_R_Discharge`

`Const_Lbat_Discharge` rename as `Const_L_Discharge`

`Map_R_Batt_Temp_Charge` rename as `Map_R_Charge`

`Const_Lbat_Charge` rename as `Const_L_Charge`

`Const_Tn` rename as `Const_Temp_nom`

`Const_I0` rename as `Const_I_Loss_nom`

`Const_A_surface` rename as `Const_A_Surface`

`Const_eps` rename as `Const_Factor_ThermalEmission`

`Const_cMr` rename as `Const_c_MainReaction`

The Const_Boltzmann parameter has been removed.

Related topics

References

Battery 176

History of the BATTERY_CELL Block

Release 2019-A

The model structure and the parameterization of the battery model were changed, so that the BATTERY_CELL block is no longer needed for the new battery model version. Therefore, the block is shifted to the former version subsystem of the library and the library link is changed to the former version during migration. Thus, the simulation behavior does not change.

Release 2013-A

New outports to support battery parallel circuit connection have been added:

- Electromotive voltage
- Voltage loss
- Resistance

History of the BATTERY_MULTICELL Block

Release 2020-B

The block has a new inport for external voltage drop: V_Loss_External[V] You can use it to simulate the dynamic voltage drop with several external RC circuits.

It is connected to a constant block with the value *zero* during migration.

Release 2020-A

The accuracy of the electromotive force cell voltage in dependence of the SOC of each individual cell was improved so that the model provides a more precise simulation.

The former simulation behavior cannot be automatically ensured via migration. During the migration of older ASM models, the link to the battery multicell library is changed to the former implementation in the FormerVersion/BATTERY_MULTICELL_11_0 subsystem. This way, the simulation behavior does not change.

To use the new implementation in your model, drag the BATTERY_MULTICELL block from the library to your model and adapt the inports, outports, and parameters to your requirements.

Note

If you use the Operator version of the Engine Gasoline Hybrid demo model, migration issues can occur because the BATTERY_MULTICELL_11_0 block is not part of the ASM Electric Components Operator Library. To solve this issue, drag the new BATTERY_MULTICELL block to the the model and adapt the initialization files accordingly.

Release 2019-A

The model structure and the parameterization of the battery model were changed:

- The capacity of the cells is now set as the difference from the reference cell capacity and no longer as an absolute value.
- The initial temperature of the cells is now set as the difference to a new initial temperature parameter and not as an absolute value.
- The unit of temperature parameters was changed from *Kelvin* to *degree Celsius*.
- The table of internal resistance was changed from SOC and current dependency to SOC and temperature dependency.
- The table that sets an internal resistance factoras an function of the temperature was removed and replaced by a new current-dependent table.
- The linear temperature dependency of the battery capacity was replaced by a table parameter.

Because of these changes, parameters cannot be migrated automatically.

During migration, the link to the BATTERY_MULTICELL library is changed to the former version BATTERY_MULTICELL_10_0 subsystem. Thus, the simulation behavior does not change. To use the new implementation, drag the BATTERY_MULTICELL block from the ASM Electric Components Library to your model and adapt the inports, outports, and parameters to your requirements.

Note

When you use the older Operator version of the Engine Gasoline Hybrid demo model, some migration issues might occur because the BATTERY_MULTICELL_10_0 is not part of the ASM Electric Components Operator Library. To solve this issue, simply drag the new BATTERY_MULTICELL block to the model and adapt the initialization files accordingly.

Release 2018-B

The calculation of the thermal radiation was corrected to avoid malfunction if *Number of cells in y direction* is set to 1.

The calculation of the thermal loss reaction power was corrected to avoid a long-term battery temperature drift.

The exchange of the P_Joule signal with the P_Cooling signal in the ASMSignalBus was corrected.

Release 2017-A

Heat generation according to the chemical battery main reaction and the loss reaction, e.g., gassing effects, must be calculated for each cell of the battery pack. For this, a multiplication of these two thermal powers with the number of cells was added.

These changes affect only the thermal mode battery mean temperature. If the temperature is simulated for each individual cell, the thermal main reaction and power loss reaction has been simulated correctly.

Release 2016-B

The thermal battery model is extended to simulate the temperature for each separate cell and the thermal interaction with neighbor cells. Also, a cooling plate can be simulated for the six battery pack surfaces.

The model includes example parameterizations for different battery types and technologies, such as lead-acid, NiMH and lithium-ion (NMC, LFP, LTO) batteries.

Release 2013-B

New signals (e.g., power signals) have been added to the ASMSignalBus.

Release 2013-A	New outports to support battery parallel circuit connection have been added: ▪ Electromotive voltage ▪ Voltage loss ▪ Resistance
Release 7.4	The Goto/From blocks have been replaced with signal lines in the ASMSignalBus. This solves a problem with multiple instances of the battery block
Release 7.3	The state of health (SOH) functionality has been added. The initial state of charge (SOC) for each separate cell is parameterized as a relative value to the initial SPC of the reference cell. A relative initial SOC is now used for each cell instead of an absolute initial SOC, so that parameters cannot be migrated automatically. The link to the battery multicell library is changed to the former implementation (FormerVersion/BATTERY_MULTICELL_2_0 subsystem) during the migration of older ASM models. Thus, the simulation behavior is not changed. If you want to use the new engine basic implementation, drag the Battery_MULTICELL block from the ASM_ElectricComponents_lib Simulink library to your model and adapt the inports, outports and parameters to your needs.
Release 7.2	Data model reset is added.
Related topics	References Battery Multicell 184

History of the BATTERY_THERMAL Block

Release 2019-A	The model structure and the parameterization of the battery model were changed, so that the BATTERY_THERMAL block is no longer needed for the new battery model version. Therefore, the block is shifted to the former version subsystem of the library and the library link is changed to the former version during migration. Thus, the simulation behavior does not change.
Release 2018-B	The calculation of the thermal loss reaction power was corrected to avoid a long-term battery temperature drift.

Release 2017-A	Heat generation according to the chemical battery main reaction and the loss reaction, e.g., gassing effects, must be calculated for each cell of the battery pack. For this, a multiplication of these two thermal powers with the number of cells was added.
Release 2016-B	The block has two new outports: Capacity_Thermal[J|(kgK)] and P_MainAndLossReaction[W]

History of the BLDC_CONTROLLER Block

Release 2013-B	A reset of the block modulator has been added.
Release 2013-A	A new inport for reset functionality has been added.
Release 6.5	The is_index indicator matrix parameter, the is_dir indicator vector and the two Zi_HSD and Zi_LSD matrix parameters have been removed as static parameters below the mask.
Related topics	References BLDC Controller 19

History of the BLDC_CONTROLLER_BASIC Block

Release 2013-A	A new inport for reset functionality has been added.
Related topics	References BLDC Controller Basic 20

History of the Block_Modulator Block

Release 2013-B	A reset inport has been added.
Related topics	References Block Modulator 23

History of the BRAKE_CONTROL Block

Release 2020-B	For the *ICE only* drive mode, the **Trq_Request_Brake** signal is now set. To ensure the former simulation behavior, during migration of an older model the link to the library is changed to the former implementation in: **FormerVersion/BRAKE_CONTROL_4_0**. To use the new implementation, drag the **BRAKE_CONTROL** block from the ASM Electric Components Library to your model and adapt the inports, outports, and parameters to your requirements.
Release 2019-A	The **ESP_Mode[0None|1ABS|2ESP|3ASR]** inport was renamed to **Sw_Recuperation[0Enable|1Disable]**. The functionality of the inport was not changed.
Release 2018-A	The functionality and internal structure of this block was completely redesigned. The old block is available as a former version block: **BRAKE_CONTROL_2_0**.
Release 2016-A	The calculation of the crankshaft braking force **F_Brake_CrankShaft** has been corrected. The force must be calculated by a multiplication of the electric machine torque with the transmission and differential ratio and a division with the tire radius. Therefore, the incorrect division of the transmission and differential ratio was changed to a multiplication. This correction can result in a higher braking force of the electric machine during recuperation.
Related topics	References Brake Control 134

History of the BRAKE_CONTROL_BEV Block

Release 2020-B

You can now add a minimum velocity parameter to activate recuperation only if the vehicle velocity is higher than this minimum velocity.

A rate limitation for the recuperation torque request to smooth hard steps in the torque request was added.

To ensure the former simulation behavior, during migration of older models, the link to the library is changed to the former implementation in: FormerVersion/BRAKE_CONTROL_BEV_2_0.

To use the new implementation, drag the BRAKE_CONTROL_BEV block from the ASM Electric Components Library to your model and adapt the inports, outports, and parameters to your requirements.

Release 2019-A

The ESP_Mode[0None|1ABS|2ESP|3ASR] inport was renamed to Sw_Recuperation[0Enable|1Disable]. The functionality of the inport was not changed.

Release 2018-A

This new block monitors and coordinates the allocation of the requested braking torque between the electric generator and the hydraulic brake system for a battery electric vehicle (BEV).

Related topics

References

Brake Control BEV 124

History of the BRUSHLESS_DC_MACHINE_ALPHA_BETA Block

Release 2018-B

The Const_Psi parameter for flux induced by permanent magnets has been changed to the Const_Back_EMF parameter for the back EMF constant.

Release 2013-B

New signals (e.g., power signals) have been added to the ASMSignalBus.

Release 2013-A

A new inport for reset functionality has been added.

Release 6.4	Signal label in ASMSignalBus changed.
Related topics	References Brushless DC Machine Alpha Beta 48

History of the COMPRESSOR Block

Release 2019-B	The block had internal adaptations. These have no effect on the simulation result and its functionality.
Related topics	References Compressor 208

History of the DC_LINK Block

Release 2016-B	The block has two new inports: I_DCLink[A] and Sw_Source[1Current|2voltage] The block has a new outport: Const_R_DC[Ohm] The outport V_Out[V] was renamed to V_DCLink[V].
Release 2013-B	This block is new. It presents a DC link circuit. It is used as an intermediate circuit to connect the power supply (e.g., battery) with the load system (e.g., inverter or passive load).
Related topics	References DC Link 115

History of the DC_MACHINE Block

Release 7.3

The pole pairs dependency of the induced EMF voltage has been added so that the model's behavior is changed. Because migration cannot be done automatically, the link to the **DC machine** library is changed to the former implementation (**FormerVersion/DC_MACHINE_1_0** subsystem) during the migration of older ASM models. Thus, the simulation behavior is not changed. If you want to use the new engine basic implementation, drag the **DC_MACHINE** block from the **ASM_ElectricComponents_lib** Simulink library to your model and adapt the inports, outports and parameters to your needs.

Related topics

References

DC Machine 91

History of the DUTYCYCLES_ROUTING Block

Release 2017-A

This block is new. It can change the order of the input duty cycles according to the input type.

Related topics

References

Duty Cycles Routing 160

History of the ELECTRIC_MACHINE_BASIC Block

Release 2020-B

A new **I_DCLink[A]** outport was added. Because the machine voltage is usually lower than the battery (or the DC link) voltage, the battery (or the DC link) current is calculated according to the power balance.

It is connected to a Terminator block during migration.

According to the power balance $P_{DCLink} = P_{In,\ EM}$, you should use this new outport instead of the **I[A]** outport. Therefore, you have to connect the **I[A]** outport to a Terminator block.

Release 2019-B

A new inport was added to switch the machine on and off.

The machine can run as motor or generator, depending on the torque and engine speed direction. Therefore, the sign handling of the machine current and speed has been improved depending on the machine state.

Release 2014-B

The **ELECTRIC_MACHINE_BASIC** block is new. It represents the basic function of an electric machine (e.g., PMSM or SCIM) with a current controller and power electronics. The electric machine is simulated as a first-order transfer function (PT1).

Related topics

References

Electric Machine Basic..... 95

History of the ENGINE_INERTIA Block

Release 2013-B

An inport for reset and the initial engine speed has been added.

Related topics

References

Engine Inertia..... 147

History of the ENGINE_POSITION Block

Release 2018-B

The new **Reset[0|1]** inport has been added to reset the output value.

Related topics

References

Engine Position..... 149

History of the HALF_BRIDGE_INVERTER Block

Release 2019-B	The block had internal adaptations. These have no effect on the simulation result and its functionality.
Release 2018-B	The current states, the freewheeling state, and the voltage drop at negative current were updated.
Release 2013-B	New signals (e.g., power signals) have been added to the ASMSignalBus. The inverter behavior if both gates (HSD and LSD) are on or off at the same time has been improved.
Release 2013-A	Voltage loss calculation of on-state resistance is added. To influence the Gate On state handling, a duty cycle threshold value (on point) can be defined. If the HSD duty cycle is higher than this threshold, the HSD duty cycle is set to one and the LSD duty cycle to zero and vice versa. The protection time handling can be disabled with the protection time switch. In the disabled state, the LSD duty cycle is calculated from the HSD duty cycle (LSD duty cycle = 1 - HSD duty cycle).
Release 7.3	More detailed switch timing (for example, if both gates are zero) has been implemented.
Release 7.1	Zero current detection enlarged.
Release 6.4	Signal label in ASMSignalBus changed.
Related topics	References Half-Bridge Inverter 82

History of the HALL_ENCODER Block

Release 6.5	The **Hall_Matrix** parameter has been subdivided into six Hall configuration vector parameters. During migration, an initialization M file is generated for these new vector parameters.
Related topics	References Hall Encoder 79

History of the KEY_SIGNALS_ICE Block

Release 2020-B	There is a new inport: **State_DCLink[0Off|1On]**. You can use it to hide the starter request if the state of the DC link is *zero*. The new inport is connected with a constant block with the value *one* during migration.
Release 2016-A	A new parameter has been added to the block to set a maximum starter request on time.
Related topics	References Key Signals ICE 141

History of the LIGHTING_SYSTEM Block

Release 2017-A	A new parameter and a new inport for turn signals have been added to the block.
Release 2015-A	The division by zero was adjusted to handle zero power values.
Release 2013-A	This block is new to simulate different loads of an automotive lighting system.

Related topics	References Lighting System 214

History of the PARALLEL_CIRCUIT_CURRENT_SPLIT Block

Release 2013-B	New outport for the terminal voltage of the complete battery parallel circuit has been added.
Release 2013-A	This block is new to calculate the current distribution for a battery parallel circuit connection.
Related topics	References Parallel Circuit Current Split 195

History of the PERMANENT_MAGNET_SYNCHRONOUS_MACHINE_D_Q Block

Release 2018-B	The name of the ASMSignalBus has been changed from PermanentMagnet_SyncronousMachine_d_q to PMSM_d_q.
Release 2015-B	A new parameter has been added to switch the machine configuration. The machine can now be modeled in either a star or a delta configuration.
Release 2013-B	New signals (e.g., power signals) have been added to the ASMSignalBus. The back EMV voltage calculation has been expanded with the voltage inducted from id and iq.
Release 2013-A	A new inport for reset functionality has been added.

Release 7.1	Interchanged signals L_d and L_q corrected.
Related topics	References Permanent Magnet Synchronous Machine DQ.....51

History of the PI_CONTROLLER Block

Release 2013-A	A new inport for reset functionality has been added.
Related topics	References PI Controller.....25

History of the PI_CONTROLLER_EXT_SATURATION Block

Release 2013-A	A new inport for reset functionality has been added.
Related topics	References PI Controller Ext Saturation.....26

History of the PMSM_CONTROLLER Block

Release 2019-B	The block had internal adaptations. These have no effect on the simulation result and its functionality.
Release 2018-B	The tag visibility of the Goto blocks was changed from global to scoped.

Release 2015-B	A new parameter has been added to control the machine according to its configuration.
Release 2013-B	A reset of the space vector modulator has been added.
Release 2013-A	A new inport for reset functionality has been added.
Release 7.4	The decoupling equation of the current controller has been corrected.
Related topics	References PMSM Controller 28

History of the PMSM_CONTROLLER_BASIC Block

Release 2019-B	The block had internal adaptations. These have no effect on the simulation result and its functionality.
Release 2018-B	The tag visibility of the Goto blocks was changed from global to scoped.
Release 2013-A	A new inport for reset functionality has been added.
Related topics	References PMSM Controller Basic 30

History of the PMSM_CONTROLLER_THREE_LEVEL Block

Release 2018-B	The tag visibility of the Goto blocks was changed from global to scoped.

Release 2015-B	A new parameter has been added to control the machine according to its configuration.
Release 2013-B	A reset of the three level space vector modulator has been added.
Release 2013-A	A new inport for reset functionality has been added.
Release 7.4	The decoupling equation of the current controller has been corrected.
Related topics	References PMSM Controller Three Level 35

History of the PMSM_D_Q_NONLINEAR Block

Release 2018-B	The name of the ASMSignalBus has been changed from PermanentMagnet_SyncronousMachine_d_q to PMSM_d_q_Nonlinear.
Release 2015-B	A new parameter has been added to switch the machine configuration. The machine can now be modeled in either a star or a delta configuration.
Release 2014-A	A new parameter has been added to switch the power invariance of the transformation from the abc to the dq reference frame on or off.
Release 2013-B	New signals (e.g., power signals) have been added to the ASMSignalBus. The back EMV voltage calculation has been expanded with the voltage inducted from id and iq.
Release 2013-A	This block is new as a PMSM machine with nonlinear current-dependent inductances.

Related topics

References

Permanent Magnet Synchronous Machine DQ Nonlinear..... 54

History of the POTENTIOMETER Block

Release 2013-A

This block is new to simulate a potentiometer as a variable load.

Related topics

References

Potentiometer..... 100

History of the PTC_GRID_DEFROSTER Block

Release 2015-A

The unit conversion of the temperature signal T[°C] in ASMSignalBus was corrected.

Release 2013-A

This block is new to simulate a PTC grid defroster is available.

Related topics

References

PTC Grid Defroster..... 216

History of the RC_BATTERY Block

Release 2020-B

This block is new. It simulates an RC circuit.

The battery-equivalent circuit includes a number of RC circuits to simulate the dynamic voltage drop effects of a battery.

The RC_BATTERY block simulates one RC circuit consisting of a resistor and capacitor in parallel connection and provides a dynamic voltage drop for the BATTERY_MULTICELL model. If required, you can use several of the

RC_BATTERY blocks to achieve a higher accuracy in the simulation of the loss voltage.

Note

The resistance and the capacitance of the RC circuit can depend on the temperature and the state of charge of the battery

Related topics

References

RC Battery 198

History of the RC_LOAD_SERIES Block

Release 2019-A

A new V_Init[V] inport was added to set the initial capacitor voltage.

Two new outports V_C[V] and V_R[V] were added to provide the capacitance and resistance voltage.

A new Sw_V_Init[0Intern|1Extern] parameter was added to define if the initial capacitor voltage is set via a parameter or via a block inport.

Release 7.2

The lower saturation limit of integrator blocks is removed.

Related topics

References

RC Load Series 105

History of the RL_LOAD_PARALLEL Block

Release 7.2

The lower saturation limit of integrator blocks is removed.

Related topics

References

RC Load Parallel 103

History of the RL_LOAD_SERIES Block

Release 7.2	The lower saturation limit of integrator blocks is removed.
Related topics	References RL Load Series 108

History of the RLC_LOAD_PARALLEL Block

Release 7.2	The lower saturation limit of integrator blocks is removed.
Related topics	References RLC Load Parallel 111

History of the RLC_LOAD_SERIES Block

Release 2020-B	The setting of the initial capacitance voltage via the block inport V_Init[V] was corrected.
Release 7.2	The lower saturation limit of integrator blocks is removed.
Related topics	References RLC Load Series 112

History of the SCIM_CONTROLLER Block

Release 2018-B	The tag visibility of the Goto blocks was changed from global to scoped.

Release 2015-B	A new parameter has been added to control the machine according to its configuration.
Release 2014-B	A fieldweakening controller has been added. The squirrel cage induction machine can now operate above the base speed range.
Release 2014-A	This new controller block is designed to control a squirrel cage induction machine. It contains: ▪ Two current controllers (d-axis and q-axis) ▪ A rotor flux estimator ▪ A flux controller ▪ A speed controller
Related topics	References SCIM Controller 37

History of the SCIM_CONTROLLER_BASIC Block

Release 2018-B	The tag visibility of the Goto blocks was changed from global to scoped.
Related topics	References SCIM Controller Basic 40

History of the SEPARATELY_EXCITED_DC_MACHINE Block

Release 2014-A	A unit delay block has been added to hide algebraic loops of the integrator in the field subsystem.
Release 2013-B	New signals (e.g., power signals) have been added to the ASMSignalBus.

Release 2013-A	A new inport for reset functionality has been added.
Release 7.2	Torque and inducted voltage calculation is corrected by the factor 2/π.
Release 6.4	Signal label in **ASMSignalBus** changed. The changed signal labels of the **ASMSignalBus** have also been changed in all corresponding **Simulink Bus Selector** blocks, so no additional migration steps are required.
Related topics	References Separately Excited DC Machine 58

History of the SIGNALS_ROUTING Block

Release 2018-B	The name of the ASMSignalBus was changed from **SquirrelCage_AsyncronousMachine_d_q** to **SCIM_d_q**.
Release 2017-A	This block is new. It can change the order of the input signals.
Related topics	References Signals Routing 164

History of the SOFT_ECU_EV_CHARGE_CONTROLLER Block

Release 2018-A	This new block controls the constant current constant voltage (CCCV) battery charging process with a precharge phase. The controller monitors the battery state and determines a charge current request that is sent to the DC charging station.

Related topics

References

Soft ECU Charge Controller..... 128

History of the SOFT_ECU_CHARGING_STATION Block

Release 2020-B

A new charging station voltage set mode was added, where the vehicle requests the voltage and the current. The soft ECU sets the voltage demand with a current limitation according to the vehicle request.

There is a new parameter to set the maximum energy of the charging station: E_Max[Wh].

The block has two new parameters: Sw_CtrlMode and Const_E_Max.

During migration, the new parameters are set to useful values to maintain the previous behavior.

Release 2018-A

This block is new. It controls the battery charging current by setting the desired charging station DC voltage.

Related topics

References

Soft ECU Charging Station..... 129

History of the SoftECU_Hybrid_Manager Block

Release 2015-B

The block is split in the following subcomponent blocks:

- BRAKE_CONTROL
- DRIVE_MANAGEMENT
- TRQ_REQUEST_COORDINATION
- KEY_SIGNALS_ICE
- STARTER_ICE
- CLUTCH_CONTROL
- HYBRID_VEHICLE_SWITCH

The change has no functional effect but it lets you modify the SoftECU Hybrid Manager easier.

History of the SPACE_VECTOR_MODULATOR Block

Release 2013-B	A reset inport has been added.
Related topics	References Space Vector Modulator 45

History of the SQUIRREL_CAGE_ASYNCHRONOUS_MACHINE_D_Q Block

Release 2015-B	A new parameter has been added to switch the machine configuration. The machine can now be modeled in either a star or a delta configuration.
Release 2014-B	The Back EMF Voltage outport is now calculated. New signals (e.g., q-axis back EMF voltage) have been added to the ASMSignalBus.
Release 2013-B	New signals (e.g., power signals) have been added to the ASMSignalBus.
Release 2013-A	A new inport for reset functionality has been added. The multiplication of flux and mutual inductance has been corrected.
Release 7.2	Multiplication of flux signals by their mutual inductivity is added to correct the normalized flux values.
Related topics	References Squirrel Cage Asynchronous Machine DQ 60

History of the STARTER Block

Release 2019-A	A new Factor_k_phi_PolePairs[Vs] outport was added to the DC_MACHINE subsystem to correct the maximum speed calculation for the overrunning clutch. The model was changed, so the model behavior cannot be migrated automatically. During migration, the link to the library is changed to the former version STARTER_5_0. Thus, the simulation behavior does not change. To use the new implementation, drag the STARTER block from the ASM Electric Components Library to your model and adapt the inports, outports, and parameters to your requirements.
Release 2018-B	The RL_System_Select block has been updated.
Release 7.3	The pole pairs dependency of the induced EMF voltage has been added so that the model's behavior is changed. Because migration cannot be done automatically, the link to the DC machine library is changed to the former implementation (FormerVersion/STARTER_2_0 subsystem) during the migration of older ASM models. Thus, the simulation behavior is not changed. If you want to use the new engine basic implementation, drag the STARTER block from the ASM_ElectricComponents_lib Simulink library to your model and adapt the inports, outports and parameters to your needs.
Release 7.0	Internal block adaptations have been performed without any functional changes. The Kl_50_active[0|1] signal label in ASMSignalBus has changed to Sw_StarterReq[0Off|1On]. As all the relevant Simulink Bus Selector blocks automatically contain the new signal label, no additional migration steps are required.
Related topics	References Starter 171

History of the STARTER_ICE Block

Release 2019-B	The block had internal adaptations. These have no effect on the simulation result and its functionality.

Release 2016-A	To check for the minimal transmission speed, hysteresis has been implemented for the block. It therefore hides a toggling starter on the signal.
Related topics	References Starter ICE 143

History of the SUPERCAPACITOR Block

Release 2017-A	This block is new. It describes a simplified model of a supercapacitor.
Related topics	References Supercapacitor 118

History of the THREE_LEVEL_HALF_BRIDGE_INVERTER Block

Release 2019-B	The block had internal adaptations. These have no effect on the simulation result and its functionality.
Release 7.1	The new THREE_LEVEL_HALF_BRIDGE_INVERTER block is used to convert DC voltage to AC voltage of different magnitude and frequency. It can be built using different power electronics devices.
Related topics	References Three-Level Half-Bridge Inverter 86

History of the THREE_LEVEL_SPACE_VECTOR_MODULATOR Block

Release 2013-B

A reset inport has been added.

Related topics

References

Three Level Space Vector Modulator 46

History of the THREE_LEVEL_THREE_PHASE_INVERTER Block

Release 2019-B

The block had internal adaptations. These have no effect on the simulation result and its functionality.

Release 7.1

The new THREE_LEVEL_THREE_PHASE_INVERTER block implements a three-phase power converter that consists of up to twelve power switches connected in a bridge configuration.

Related topics

References

Three-Level Three-Phase Inverter 64

History of the THREE_PHASE_DCM_INVERTER Block

Release 2019-B

The block had internal adaptations. These have no effect on the simulation result and its functionality.

Release 2019-A

The discontinuous conduction mode of a three-phase electrical load by turning off all power switches was improved.

During migration, the link to the library is changed to the former version THREE_PHASE_DCM_INVERTER_7_0. Thus, the simulation behavior does not change. To use the new implementation, drag the THREE_PHASE_DCM_INVERTER block from the ASM Electric Components Library to your model.

Release 2018-B	The current states, the freewheeling state, and the state of the half bridge state_Halfbridge when the duty cycles are nonzero were updated.
Release 2017-A	An initial condition for the sample time and a simple inverter function for debugging purposes have been added to the block.
Release 2014-B	The THREE_PHASE_DCM_INVERTER block is new. It represents a three-phase discontinuous mode power converter that consists of up to six power switches connected in a bridge configuration.
Related topics	References Three-Phase DCM Inverter 67

History of the THREE_PHASE_INVERTER Block

Release 2019-B	The block had internal adaptations. These have no effect on the simulation result and its functionality.
Release 2018-B	The current states, the freewheeling state, and the voltage drop at negative current were updated.
Release 2013-B	New signals (e.g., power signals) have been added to the ASMSignalBus. The inverter behavior if both gates (HSD and LSD) are on or off at the same time has been improved.
Release 2013-A	Voltage loss calculation of on-state resistance has been added. To influence the Gate On state handling, a duty cycle threshold value (on point) can be defined. If the HSD duty cycle is higher than this threshold, the HSD duty cycle is set to one and the LSD duty cycle to zero and vice versa. The protection time handling can be disabled with the protection time switch. In the disabled state, the LSD duty cycle is calculated from the HSD duty cycle (LSD duty cycle = 1 - HSD duty cycle).

Release 7.3	More detailed switch timing (for example, if both gates are zero) has been implemented.
Release 7.1	Zero current detection enlarged.
Release 6.4	Signal label in ASMSignalBus changed.
Related topics	References Three-Phase Inverter 72

History of the THREE_PHASE_POWERSUPPLY Block

Release 2016-B	The block has new inports: Init_Angle[Rad] and Reset[0|1] The block has new outports: Const_R_AC[Ohm] and Const_L_AC[H] The following port names were changed: v_Mains[V] to V_phase_to_phase_rms[V] and v_Mains[a;b;c][V] to v [a;b;c][V].
Related topics	References Three-Phase Power Supply 119

History of the THREE_PHASE_RECTIFIER Block

Release 2018-B	The du_dt block has been replaced by the Discrete_Differentiator block in the Current_and_Voltage_Calculation subsystem.
Release 2016-B	To convert an AC source to a DC source. It simulates DC current and line currents at conduction and commutation states based on the three phase voltage, the DC voltage and the source parameters.

Related topics

References

Three-Phase Rectifier 75

History of the TRQ_REQUEST_COORDINATION Block

Reelase 2019-B

DC link support to set the torque request to zero if the DC link is inactive was added to the block.

Release 2016-A

A new inport has been added to select a right torque table for the different drive modes. The following torques are used:

- For the ICE drive mode: the torque of the ICE table
- For the EM drive mode: the torque of the EM table
- For the Hybrid drive mode: the sum torque of the ICE and EM table

Related topics

References

Torque Request Coordination 145

History of the TRQ_REQUEST_COORDINATON_BEV Block

Release 2020-B

A cross-fade between recuperation and acceleration torque, and a first-order delay for the request torque were added to avoid abrupt torque request steps and provide a smoother torque request handling.

To ensure the former simulation behavior, during migration of an older model, the, link to the library is changed to the former implementation in: FormerVersion/TORQUE_REQUEST_COORDINATION_4_0.

To use the new implementation, drag the TORQUE_REQUEST_COORDINATION block from the ASM Electric Components Library to your model and adapt the inports, outports, and parameters to your requirements.

Release 2019-B

Selector lever support with reverse driving and parking pawl control was added to the block.

Release 2019-A

A new State_DCLink[0Off|1On] inport was added to set the torque request to zero if the DC voltage is off.

Release 2018-B

Two new parameters for defining the nonlinear torque request depending on the accelerator pedal position were added to the block:

- Map_Factor_Trq_Max_EM_Front
- Map_Factor_Trq_Max_EM_Rear

In addition, the Map_Pos_AccPedal_Start parameter was added to the block to set an additional start accelerator pedal position depending on the vehicle velocity.

The new v_Vehicle[km|h] inport was added and is connected to a constant block with the value zero during migration. This inport must be connected to the vehicle velocity signal if the new map parameter Map_Pos_AccPedal_Start is used. Otherwise, a permanent zero value for the vehicle velocity can lead to errors in the simulation results.

Release 2018-A

This block is new. It coordinates the torque requests (e.g., from the accelerator pedal, the recuperation, or external components, such as the ACC) for the electric machines of a battery electric vehicle (BEV).

Related topics

References

Torque Request Coordination BEV..... 131

History of the Electric Components Demo Models

Release 2020-B

Battery Electric Vehicle Demo (BEV) model Drivetrain and driver components are now automatically initialized for scenarios with an initial vehicle speed. This includes engaging the selector lever and initializing the different drivetrain speeds accordingly to ensure a smooth scenario startup.

Vehicle Dynamics Hybrid demo A low-voltage battery was added that supplies the electrical power to the low-voltage loads, such as the fan of the air conditioning system. The low-voltage battery is charged with energy applied by the high-voltage battery system.

As the electrical load, an air conditioning system was added. It consists of an electrically driven compressor, fan, and thermal interior model components (the refrigerant circuit, the air duct, and the cabin).

The charging station model of a DC charging system has been added. The charging station controller receives a battery charging current demand from the vehicle and calculates a desired DC charging voltage to deliver the requested current.

Engine Gasoline Hybrid demo A low-voltage battery has been added that supplies the electrical power to the low-voltage loads, such as the fan of the air conditioning system. The low-voltage battery is charged with energy applied by the high-voltage battery system.

As the electrical load, an air conditioning system has been added. It consists of an electrically driven compressor, fan, and thermal interior model components (the refrigerant circuit, the air duct, and the cabin).

The charging station model of a DC charging system has been added. The charging station controller receives a battery charging current demand from the vehicle and calculates a desired DC charging voltage to deliver the requested current.

Vehicle Electrical System demo For each of the two high-voltage batteries that are connected in parallel, the dynamic voltage drop is now simulated with three external RC circuits to achieve a higher accuracy in the simulation of the voltage drop. The resistor and capacity value of the RC circuit can depend on the battery temperature and state of charge.

Release 2020-A

Three-phase load simulation The THREE_PHASE_INVERTER block was replaced by the THREE_PHASE_DCM_INVERTER block in the Electrical Drive Closed Loop PMSM Nonlinear demo model to simulate the operation of a three-phase load with missing driver signals of the power switches (e.g., for HSDa and LSDa).

Sample time The sample time of all Electrical Drive Closed Loop demo models was set to *50 µs* as default.

Release 2019-B

Vehicle Dynamics Hybrid demo model A DC link has been added to the demo model to connect the high voltage battery with the electric machine. The soft ECU torque manager gets the start request from the start button, switches the DC link on, and controls the pre-charge phase of the DC link capacitor. If the capacitor voltage reaches the battery voltage, the pre-charge phase is finished, the DC link is ready for operation, and the battery voltage is provided to the connected electric machines.

Engine Gasoline Hybrid demo model A DC link has been added to the demo model to connect the high voltage battery with the electric machine. The soft ECU torque manager gets the start request from the start button, switches the DC link on, and controls the pre-charge phase of the DC link capacitor. If the capacitor voltage reaches the battery voltage, the pre-charge phase is finished,

the DC link is ready for operation, and the battery voltage is provided to the connected electric machines.

Battery Electric Vehicle (BEV) demo model In the model, the drive mode of the BEV is controlled by a selector lever. The drive mode allows forward and reverse driving, parking with parking pawl control, and a neutral mode where all toque requests are set to zero.

Release 2019-A

Battery electric vehicle (BEV) demo model A vehicle start button and a DC link model with pre-charge functionality were added to the demo model. The soft ECU torque manager gets the start request from the start button and controls the DC link to switch it on and off to provide the battery voltage to the electric machines.

The Soft_ECU_Trq_Manager model was extended with an interface for external torque requests from ACC and ESP ECUs.

Vehicle Dynamics Hybrid demo model The Soft_ECU_Hybrid_Manager model was extended with an interface for external torque requests from ACC and ESP ECUs.

Release 2018-A

Battery electric vehicle (BEV) demo model The new battery electric vehicle (BEV) model simulates the dynamics of a passenger car. The vehicle is composed of an energy storage system, an electric drive for the front axle and one for the rear axle, a drivetrain with flexible shafts, a rigid vehicle body with four wheels, a serial regenerative brake system, an electric air conditioning system, and a battery charging system with charging station.

The model represents the vehicle's longitudinal, lateral, and vertical dynamics, and provides a detailed simulation of a drivetrain, suspension kinematics and compliance, tire-road friction forces and moments, steering, and brakes.

Permanent Magnet Synchronous Motor (PMSM) demo model The new Permanent Magnet Synchronous Motor model simulates the control of a permanent magnet synchronous machine (PMSM) including a controller, a supercapacitor as the power supply, a three-level inverter, a motor, and the mechanics of an engine shaft.

Release 2014-B

Vehicle Electrical System Demo The ELECTRIC_MACHINE_BASIC block has been added to the ASM_VehicleElectricalSystem demo model as additional load.

SQUIRREL_CAGE_ASYNCHRONOUS_MACHINE_D_Q This is a new demo model of the squirrel cage induction machine.

Release 2013-B

To connect the battery and the inverter, a DC link circuit has been added to the ASM_ElectricDrive_PMSM_TwoLevelInverter demo model.

Release 2013-A	New loads for Lighting System, PTC Grid Defroster and Potentiometer have been added to the demo model. The battery circuit to a parallel connection of two battery stacks has been added.
Release 7.0	The demo model now supports plotting of simulation data in ModelDesk. The ModelDesk_Plotting block has been added to the MDL_UserInterface subsystem.

Appendix

Where to go from here

Information in this section

Numeric Solver 545
Describes the main solvers that are used in the implementation: Forward-Euler, Backward-Euler and Tustin.

Bibliography 546
Provides a list of literature.

Numeric Solver

Description

The previously described models must be solved with an appropriate solver. The equations are solved numerically by discrete methods, i.e. the Simulink solver has no effect on the equation solving technique.

Three main solvers were utilized in the implementation: Forward-Euler, Backward-Euler and Tustin.

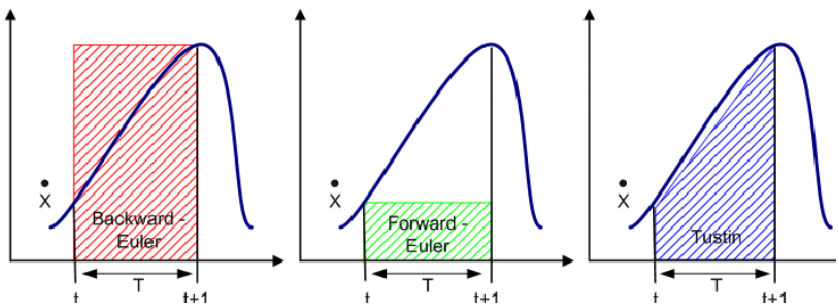

Given the state space equation

$$\dot{x} = A\,x + B\,u$$

Forward-Euler For the Forward-Euler method, the discrete solution can be written as:

$$x_{k+1} = (E + T\,A)\,x_k + T\,B\,u_k$$

As the Forward-Euler method contains no algebraic loops, it can be solved with simple current loops without matrix algebra.

Backward-Euler For the Backward-Euler method, the discrete solution can be written as:

$$x_{k+1} = (E - T\,A)^{-1}(x_k + T\,B\,u_{k+1})$$

Tustin For the Tustin method, the discrete solution can be written as:

$$x_{k+1} = \left(E - \frac{TA}{2}\right)^{-1}\left(\left(E + \frac{T}{2}A\right)x_k + \frac{T}{2}B\left(u_{C_{k+1}} + u_{C_k}\right) + T\,B\,u_{B_{k+1}}\right)$$

Mixed Backward-Euler/Tustin In HIL simulations especially, some variables for the motor model are provided by hardware. These hardware signals are pre-integrated (u_B Block). Experience has shown that the pre-integrate signals are solved by Backward-Euler best. Continuous signals (u_C Continues) such as the EMF voltage can be solved by Tustin best.

$$\dot{x} = A\,x + B\,(u_B + u_C)$$

As result, a mixed solver that combines two of the solvers above is implemented. For the mixed Backward-Euler/Tustin method, the discrete solution can be written as:

$$x_{k+1} = \left(E - \frac{T\,A}{2}\right)^{-1}\left(\left(E + \frac{T}{2}A\right)x_k + \frac{T}{2}B\left(u_{C_{k+1}} + u_{C_k}\right) + T\,B\,u_{B_{k+1}}\right)$$

Bibliography

List of literature

The following literature provides more details:

[Bos02] Robert Bosch GmbH: Kraftfahrtechnisches Taschenbuch. 24th edition, Braunschweig/Wiesbaden: Vieweg, 2002.

[Gro13] Großmann H.: Pkw-Klimatisierung, Physikalische Grundlagen und technische Umsetzung. 2nd edition, Berlin/Heidelberg: Springer-Vieweg, 2013.

[Kra02] Paul C. Krause, Wasynczuk O., Scott D.: Analysis of Electric Machinery and Drive Systems. 2nd edition, Purdue University, 2006.

[Qua98] Quang N. P., Dittrich J.-A.: Praxis der feldorientierten Drehstromantriebsregelungen. Renningen - Malmsheim, 1999.

[Sch 09] D. Schroeder: Elektrische Antriebe- Regelung von Antriebssystemen. 3. Auflage Springer 2009

[Sie06] Sieglin E. et al.: Powernet Simulation as a Tool for the Development of a Highly Reliable Energy Supply for Safety Relevant Control Systems in X-By-Wire Vessels in the EU SPARC Project. SAE World Congress, Detroit, Michigan, 2006.

A

air path 369
AIR_CHANNEL block 201
ALTERNATOR block 168
ALTERNATOR_5_0 block 444
ANTI_ALISING_AND_POWER_CALCULATION block 152
ASM_EC_ROUTING block 163
ASM_EC_STARDELTA block 153
ASM_ElectricComponents_lib 15

B

Backward-Euler method 546
basic PMSM controller 30
BATTERY block 176
battery multicell 184
  former version 460, 470
BATTERY_13_0 block 452
bibliography 546
BLDC controller 19
  basic 20
BLOCK_MODULATOR block 23
Brake block 434
BRAKE_CONTROL block 134
BRAKE_CONTROL_2.0 block 481
BRAKE_CONTROL_4_0 block 484
BRAKE_CONTROL_BEV block 124
BRAKE_CONTROL_BEV_2_0 block 486
brushless DC machine alpha beta 48

C

CABIN block 204
CLUTCH_CONTROL block 136
Collision Sensor subsystem 402
Common Program Data folder 14
COMPRESSOR block 208
cooling subsystem 373
current sink 98
CustomPoints subsystem 417

D

DC machine separately excited 58
DC_LINK block 115
DC_MACHINE block 91
discrete differentiator 157
discrete integrator 157
discrete PT1 158
Documents folder 14
DRIVE_MANAGEMENT block 137
duty cycle evaluation 159
DUTYCYCLES_ROUTING block 160

E

ELECTRIC_MACHINE_BASIC block 95
engine position 149
ENGINE_INERTIA block 147
exhaust system 378

F

FAN block 211
FellowMovement subsystem 400
Forward-Euler method 546
front suspension 437
FUELSYSTEM subsystem 379

H

half-bridge inverter 82
HALL_ENCODER block 79
hybrid modes 327
HYBRID_VEHICLE_SWITCH block 143

I

ICE modes 324

K

Key_Signals_ICE block 141

L

light 213
LIGHTING_SYSTEM block 214
Local Program Data folder 14

N

numeric solver 545

P

P load 101
Park Clarke transformation 161
Park modulator 163
PERMANENT_MAGNET_SYNCHRONOUS_MACHINE_D_Q block 51
PI controller 25
PI controller ext saturation 26
piston engine 383
PMSM controller three level 35
PMSM_CONTROLLER block 28
PMSM_CONTROLLER_THREE_LEVEL block 35
PMSM_D_Q_NONLINEAR block 54
POTENTIOMETER block 100
PTC heater 219
PTC_GRID_DEFROSTER block 216

R

R load 102
RC load parallel 103
RC load series 105
rear suspension 438
REFRIGERANT_CIRCUIT block 221
RL load parallel 106
RL load series 108
RL_SYSTEM_SELECT block 109
RLC load parallel 111
RLC load series 112

S

ScheduleAndCalculateSensor block 426
SCIM controller 40
SCIM_CONTROLLER block 37
SensorMapping subsystem 411, 428
SEPARATELY_EXCITED_DC_MACHINE block 58
set-reset flip-flop 165
SIGNALS_ROUTING block 164
Soft ECU Gasoline 386
SOFT_ECU_AIR_CONDITIONING block 223
SOFT_ECU_CHARGING_STATION block 129
SOFT_ECU_EV_CHARGE_CONTROLLER block 128
SPACE_VECTOR_MODULATOR block 45
squirrel cage induction machine
  controller 40
SQUIRREL_CAGE_ASYNCHRONOUS_MACHINE_D_Q block 60
S-R flip-flop 165
STARTER block 171
STARTER_5_0 block 488
STARTER_ICE block 143
SUPERCAPACITOR block 118
Suspension block 435
SuspensionFront block 437
SuspensionRear block 438

T

THREE_LEVEL_HALF_BRIDGE_INVERTER block 86
THREE_LEVEL_SPACE_VECTOR_MODULATOR block 46
THREE_LEVEL_THREE_PHASE_INVERTER block 64
THREE_PHASE_DCM_INVERTER block 67
  former version 492
THREE_PHASE_INVERTER block 72
THREE_PHASE_RECTIFIER block 75
three-phase power supply 119
transformation block 153
TRQ_REQUEST_COORDINATION block 145
TRQ_REQUEST_COORDINATION_BEV block 131
TRQ_REQUEST_COORDINATION_BEV_4_0 block 497
Tustin method 546

V

vehicle movement 440
Vehicle movement block 440