Instituto Superior Técnico

BSc Aerospace Engineering

Multivariable, Nonlinear and Optimal Control

Final Report: Linear State Feedback Control of an Inverted Pendulum

Professor: João Manuel Lage de Miranda Lemos

Laboratory Professor: Carlos Filipe Gomes Bispo

Grup: 35

Lucas Moreira Nº 109657

Tomás Teixeira Nº 109766

Pedro Machado Nº 110718

Abril, 2026

Conteúdo

I Introdução 2
I-A Context and Objectives . . . 2
I-B System Description . . . 2

II Theoretical Analysis and Control Design 3
II-A Space-State Formalization . . . 3
II-B Space-State Analysis . . . 3
II-B1 Q1 - System Poles . . . 3
II-B2 Q2 - Controlabillity . . . 3
II-B3 Q3 - Observability . . . 3
II-B4 Q4 - Bode Plots . . . 3
II-C LQR Controller Design . . . 3
II-D State Estimator Design - LQE . . . 3
II-E Baseline LQG Simulation . . . 3

III Laboratory Work and Experimental Results 4
III-A Realistic System Simulation . . . 4
III-B Initial Controller Testing on Physical Hardware . . . 4
III-C Compensation of Non-Linearities: Motor Deadzone and Steady-State Error . . . 4
III-D Final Controller Tuning and Disturbance Rejection . . . 4

IV Conclusion 5

V Anexos 6

I. Introdução

A. Context and Objectives

This report details the work developed within the scope of the Multivariable, Non-linear, and Optimal Control course laboratory project. The primary objective is to design, simulate, and implement a robust control strategy to stabilize a highly non-linear and inherently unstable system using a pre-existing experimental setup of a rotary inverted pendulum.

The adopted methodology relies on linearizing the plant's mathematical model around its unstable equilibrium point (the upward vertical position) to derive a Linear Time-Invariant (LTI) state-space representation. Based on this model, a Linear Quadratic Gaussian (LQG) control architecture is developed. This comprises a Linear Quadratic Regulator (LQR) to compute the optimal state feedback law, and a Linear Quadratic Estimator (LQE, or Kalman Filter) to estimate the system's full internal state from noisy measurements. The project covers the theoretical analysis of the system, validation through MATLAB/Simulink simulations, and practical real-time implementation on the laboratory's physical hardware, specifically addressing real-world non-linearities such as motor deadzones and steady-state errors.

B. System Description

The physical plant utilized in this work is a rotary inverted pendulum apparatus (a Quanser experimental setup). The mechanical structure consists of a motorized rotary arm that actively maneuvers an unactuated, free-swinging pendulum rod attached to its extremity.

The system operates as a Single-Input Multiple-Output (SIMO) process. The single control input u is the continuous voltage applied to the DC motor that drives the horizontal rotary arm. To monitor the system's behavior, two physical sensors provide the measured output vector y:

- A potentiometer measuring the angular position of the rotary arm α.
- An optical encoder measuring the precise angular position of the pendulum relative to the arm β.

Because the system's complete state vector includes both the angular positions α, β and their respective angular velocities $\dot{\alpha}, \dot{\beta}$, but only the positions are directly measured, the system requires a state observer. Furthermore, the provided physical setup interfaces with the Simulink control environment via A/D and D/A data acquisition boards, allowing the designed controllers to be executed and tested on the real system in real-time.

II. Theoretical Analysis and Control Design

A. Space-State Formalization

A dinâmica não-linear do distema implica que este necessite de ser linearizado em torno de um ponto de equilíbrio, que dado o objetivo deste relatório, é o ponto de equilíbrio instável onde o pêndulo se encontra na posição vertical para cima. Este equilíbrio corresponde a todas as variáveis de estado iguais a zero. A derivação do modelo não-linear e a subsequente linearização não são objeto deste relatório, podendo ser encontrados no Capítulo 2 da tese de Samuel Balula **(fazer referência)**. O modelo linearizado do sistema que representa a dinâmica razoavelmente bem é dado por:

$$\begin{cases} \dot{\mathbf{x}} = A\mathbf{x} + B\mathbf{u} \\ \mathbf{y} = C\mathbf{x} + D\mathbf{u} \end{cases}$$

onde $\mathbf{x} = [\alpha\ \dot{\alpha}\ \beta\ \dot{\beta}\ i]^T$ é o vetor de estados de dimensão 5 e i é a corrente do motor. O vetor de entrada unidimensional $\mathbf{u} = u$ corresponde à diferença de potencial contínua, em *Volts*, aplicada nos terminais do motor DC através de um power amplifier, controlando diretamente α. O vetor de saída $\mathbf{y} = [\alpha\ \beta]^T$ é composto pelas medições dos sensores, correspondendo às posições angulares do braço e do pêndulo, respetivamente.

As matrizes do modelo A, B, C e D

$$A = \begin{bmatrix} 0 & 1 & 0 & 0 & 0 \\ 0 & -0.0174 & 20.7861 & -0.0023 & 57.5344 \\ 0 & 0 & 0 & 1 & 0 \\ 0 & -0.0174 & 63.8319 & -0.0071 & 57.4388 \\ 0 & -232.0252 & 0 & 0 & -755.425 \end{bmatrix}$$

B. Space-State Analysis

In this section we aim to study the previously formalized space-state, studying it in terms of poles, controlability, observability and frequency response.

1) *Q1 - System Poles:*
2) *Q2 - Controlabillity:*
3) *Q3 - Observability:*
4) *Q4 - Bode Plots:*

C. LQR Controller Design

Q5

D. State Estimator Design - LQE

Q6, Q7

E. Baseline LQG Simulation

Q8

III. Laboratory Work and Experimental Results

A. Realistic System Simulation

B. Initial Controller Testing on Physical Hardware

C. Compensation of Non-Linearities: Motor Deadzone and Steady-State Error

D. Final Controller Tuning and Disturbance Rejection

IV. Conclusion

V. Anexos

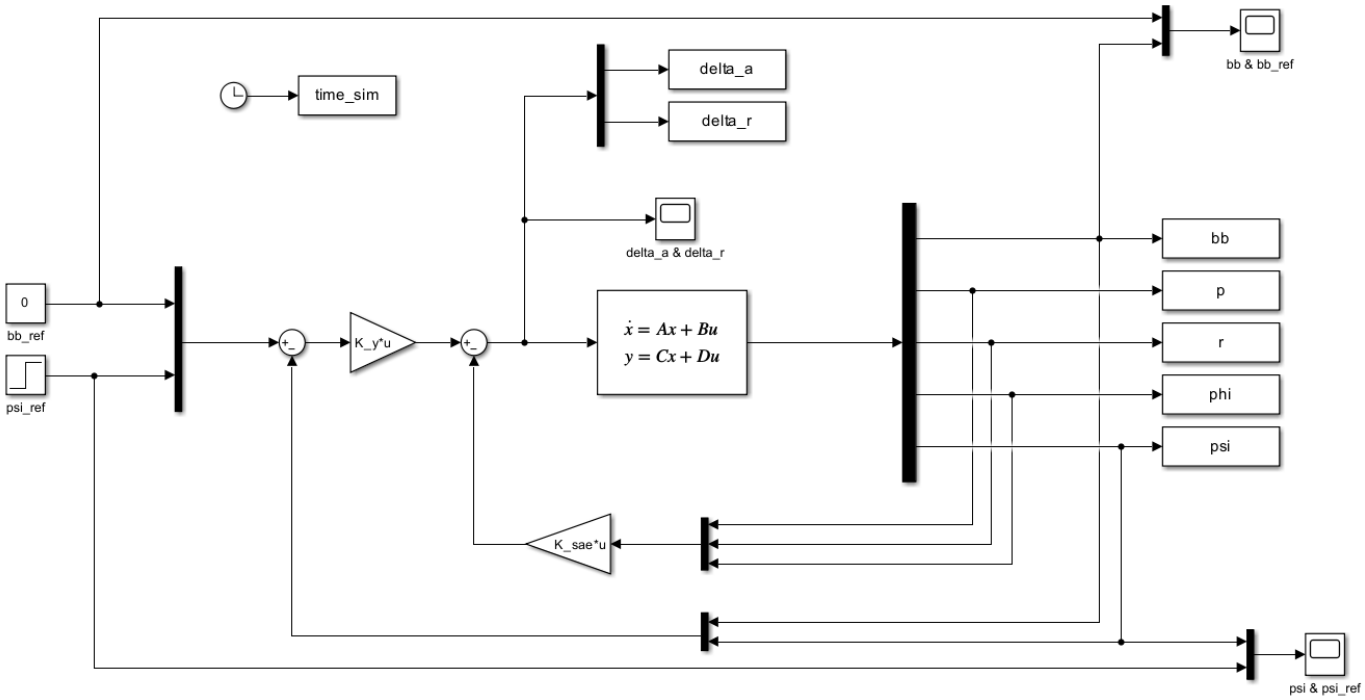

Figura 1: Diagrama de blocos da realimentação em servomecanismo